AUTHENTICATED
U.S. GOVERNMENT
INFORMATION
GPO

Federal Register

7–16–04 Friday
Vol. 69 No. 136 July 16, 2004

Pages 42549–42848

The **FEDERAL REGISTER** (ISSN 0097–6326) is published daily, Monday through Friday, except official holidays, by the Office of the Federal Register, National Archives and Records Administration, Washington, DC 20408, under the Federal Register Act (44 U.S.C. Ch. 15) and the regulations of the Administrative Committee of the Federal Register (1 CFR Ch. I). The Superintendent of Documents, U.S. Government Printing Office, Washington, DC 20402 is the exclusive distributor of the official edition. Periodicals postage is paid at Washington, DC.

The **FEDERAL REGISTER** provides a uniform system for making available to the public regulations and legal notices issued by Federal agencies. These include Presidential proclamations and Executive Orders, Federal agency documents having general applicability and legal effect, documents required to be published by act of Congress, and other Federal agency documents of public interest.

Documents are on file for public inspection in the Office of the Federal Register the day before they are published, unless the issuing agency requests earlier filing. For a list of documents currently on file for public inspection, *www.archives.gov.*

The seal of the National Archives and Records Administration authenticates the Federal Register as the official serial publication established under the Federal Register Act. Under 44 U.S.C. 1507, the contents of the **Federal Register** shall be judicially noticed.

The **Federal Register** is published in paper and on 24x microfiche. It is also available online at no charge as one of the databases on GPO Access, a service of the U.S. Government Printing Office.

The online edition of the **Federal Register** *www.gpoaccess.gov/nara,* available through GPO Access, is issued under the authority of the Administrative Committee of the Federal Register as the official legal equivalent of the paper and microfiche editions (44 U.S.C. 4101 and 1 CFR 5.10). It is updated by 6 a.m. each day the **Federal Register** is published and includes both text and graphics from Volume 59, Number 1 (January 2, 1994) forward.

For more information about GPO Access, contact the GPO Access User Support Team, call toll free 1-888-293-6498; DC area 202-512-1530; fax at 202-512-1262; or via email at *gpoaccess@gpo.gov.* The Support Team is available between 7:00 a.m. and 9:00 p.m. Eastern Time, Monday–Friday, except official holidays.

The annual subscription price for the **Federal Register** paper edition is $749 plus postage, or $808, plus postage, for a combined **Federal Register, Federal Register** Index and List of CFR Sections Affected (LSA) subscription; the microfiche edition of the **Federal Register** including the **Federal Register** Index and LSA is $165, plus postage. Six month subscriptions are available for one-half the annual rate. The prevailing postal rates will be applied to orders according to the delivery method requested. The price of a single copy of the daily **Federal Register,** including postage, is based on the number of pages: $11 for an issue containing less than 200 pages; $22 for an issue containing 200 to 400 pages; and $33 for an issue containing more than 400 pages. Single issues of the microfiche edition may be purchased for $3 per copy, including postage. Remit check or money order, made payable to the Superintendent of Documents, or charge to your GPO Deposit Account, VISA, MasterCard, American Express, or Discover. Mail to: New Orders, Superintendent of Documents, P.O. Box 371954, Pittsburgh, PA 15250-7954; or call toll free 1-866-512-1800, DC area 202-512-1800; or go to the U.S. Government Online Bookstore site, *bookstore@gpo.gov.*

There are no restrictions on the republication of material appearing in the **Federal Register.**

How To Cite This Publication: Use the volume number and the page number. Example: 69 FR 12345.

Postmaster: Send address changes to the Superintendent of Documents, Federal Register, U.S. Government Printing Office, Washington DC 20402, along with the entire mailing label from the last issue received.

SUBSCRIPTIONS AND COPIES

PUBLIC

Subscriptions:

Paper or fiche	**202–512–1800**
Assistance with public subscriptions	**202–512–1806**

General online information **202–512–1530; 1–888–293–6498**

Single copies/back copies:

Paper or fiche	**202–512–1800**
Assistance with public single copies	**1–866–512–1800 (Toll-Free)**

FEDERAL AGENCIES

Subscriptions:

Paper or fiche	**202–741–6005**
Assistance with Federal agency subscriptions	**202–741–6005**

What's NEW!

Federal Register Table of Contents via e-mail

Subscribe to FEDREGTOC, to receive the **Federal Register** Table of Contents in your e-mail every day.

If you get the HTML version, you can click directly to any document in the issue.

To subscribe, go to **http://listserv.access.gpo.gov** and select:

Online mailing list archives
FEDREGTOC-L
Join or leave the list

Then follow the instructions.

What's NEW!

Regulations.gov, the award-winning Federal eRulemaking Portal

Regulations.gov is the one-stop U.S. Government web site that makes it easy to participate in the regulatory process.

Try this fast and reliable resource to find all rules published in the *Federal Register* that are currently open for public comment. Submit comments to agencies by filling out a simple web form, or use available email addresses and web sites.

The Regulations.gov e-democracy initiative is brought to you by NARA, GPO, EPA and their eRulemaking partners.

Visit the web site at: **http://www.regulations.gov**

Printed on recycled paper.

Contents

Federal Register

Vol. 69, No. 136

Friday, July 16, 2004

Agriculture Department
See Animal and Plant Health Inspection Service
See Forest Service
NOTICES
Meetings:
Dietary Guidelines Advisory Committee, 42743–42744

Air Force Department
NOTICES
Active military service and discharge determinations:
U.S. civilian crewmembers of Flotilla Alaska Barge and Transport Co. who worked on Vietnam inland and coastal waters (April 1966 - April 1975), 42694
Patent licenses; non-exclusive, exclusive, or partially exclusive:
Input/Output Inc., 42694–42695

Animal and Plant Health Inspection Service
NOTICES
Agency information collection activities; proposals, submissions, and approvals, 42645–42646
Meetings:
Foreign Animal and Poultry Diseases, Secretary's Advisory Committee, 42646

Army Department
See Engineers Corps
PROPOSED RULES
Law enforcement and criminal investigations:
Law enforcement reporting, 41626–41636

Arts and Humanities, National Foundation
See National Foundation on the Arts and the Humanities

Blind or Severely Disabled, Committee for Purchase From People Who Are
See Committee for Purchase From People Who Are Blind or Severely Disabled

Census Bureau
NOTICES
Agency information collection activities; proposals, submissions, and approvals, 42651–42652

Centers for Disease Control and Prevention
NOTICES
Grant and cooperative agreement awards:
Namibia Institute of Pathology, 42744
Grants and cooperative agreements; availability, etc.:
Influenza surveillance networks development; correction, 42744
Meetings:
Disease, Disability, and Injury Prevention and Control Special Emphasis Panel, 42744–42745

Centers for Medicare & Medicaid Services
See Inspector General Office, Health and Human Services Department
NOTICES
Agency information collection activities; proposals, submissions, and approvals, 42745

Commerce Department
See Census Bureau
See Industry and Security Bureau
See International Trade Administration
See National Oceanic and Atmospheric Administration
NOTICES
Agency information collection activities; proposals, submissions, and approvals, 42650–42651

Committee for Purchase From People Who Are Blind or Severely Disabled
NOTICES
Procurement list; additions and deletions, 42649–42650

Committee for the Implementation of Textile Agreements
NOTICES
Textile and apparel categories:
United States-Central American Free Trade Agreement; short supply requests—
Shirting fabrics, 42690–42694

Corporation for National and Community Service
NOTICES
Agency information collection activities; proposals, submissions, and approvals, 42694

Defense Department
See Air Force Department
See Army Department
See Engineers Corps

Education Department
NOTICES
Agency information collection activities; proposals, submissions, and approvals, 42698–42701
Grants and cooperative agreements; availability, etc.:
Vocational and adult education—
Native American Vocational and Technical Education Program, 42701–42704
Meetings:
National Assessment Governing Board, 42704–42705
Postsecondary education:
Accrediting agencies and State approval agencies for nurse education institutions; national recognition, 42705–42707

Employment and Training Administration
NOTICES
Agency information collection activities; proposals, submissions, and approvals, 42777–42779

Employment Standards Administration
NOTICES
Minimum wages for Federal and federally-assisted construction; general wage determination decisions, 42779–42781

Energy Department
See Federal Energy Regulatory Commission

NOTICES
Meetings:
Environmental Management Site-Specific Advisory Board—
Fernald Site, OH, 42707–42708
Rocky Flats, CO, 42708

Engineers Corps
NOTICES
Environmental statements; notice of intent:
Arkansas River Navigation Study, AR and OK; Phase I and II elements, 42695
Lower Rio Grande Basin, TX; Raymondville Drain Project, 42695–42696
St. Martin and Iberia Parishes, LA; Atchafalaya Basin Floodway System Project, 42696–42698

Environmental Protection Agency
RULES
Air quality implementation plans:
Preparation, adoption, and submittal—
Prevention of significant deterioration and nonattainment new source review; reconsideration, 42560
Pesticides; tolerances in food, animal feeds, and raw agricultural commodities:
Spiroxamine, 42560–42571
Radiation protection programs:
Disposal regulations; Waste Isolation Pilot Plant compliance; certification and recertification criteria—
Alternative provisions, 42571–42583
Solid wastes:
Municipal solid waste landfill permit program—
Indiana, 42583–42584
PROPOSED RULES
Air programs; approval and promulgation; State plans for designated facilities and pollutants:
New Jersey, 41641–41644
Solid waste:
Municipal solid waste landfill permit program—
Indiana, 41644
NOTICES
Agency information collection activities; proposals, submissions, and approvals, 42719–42722
Environmental statements; availability, etc.:
Agency statements—
Comment availability, 42723
Weekly receipts, 42722–42723
Grants and cooperative agreements; availability, etc.:
Pesticide Environmental Stewardship Program, 42723–42727
Meetings:
Federal rulemaking through the Internet; public access forum; eRulemaking Initiative; comment request, 42727–42729

Farm Credit System Insurance Corporation
PROPOSED RULES
Farm credit system:
Golden parachute and indemnification payments, 41606–41612

Federal Aviation Administration
RULES
Airworthiness directives:
Boeing, 42549–42551
PROPOSED RULES
Airworthiness directives:
Airbus, 41612–41616
NOTICES
Airport noise compatibility program:
Noise exposure maps—
Toledo Express Airport, OH, 42801–42802
Meetings:
RTCA Program Management Committee, 42802–42803
RTCA Special Committee (200), 42803
RTCA Special Committee (201), 42802

Federal Communications Commission
NOTICES
Common carrier services:
Wireless telecommunications services—
FM broadcast construction permits auction; minimum opening bids, upfront payments and other auction procedures, 42729–42742

Federal Emergency Management Agency
RULES
Flood insurance; communities eligible for sale:
Wisconsin, 42584–42586
NOTICES
Disaster and emergency areas:
Indiana, 42761
Nebraska, 42761
North Dakota, 42762
Ohio, 42762

Federal Energy Regulatory Commission
NOTICES
Electric rate and corporate regulation filings, 42713–42716
Environmental statements; availability, etc.:
Chelan County, WA, Public Utility District No. 1, Rocky Reach Hydroelectric Project, 42716–42717
Meetings:
Sempra LNG; Port Arthur LNG and Pipeline Project, 42717
Off-the-record communications, 42718–42719
Reports and guidance documents; availability, etc.:
FERC online; filings; forms of notice, 42719
Applications, hearings, determinations, etc.:
Black Marlin Pipeline Co., 42708
CenterPoint Energy Gas Transmission Co., 42708–42709
Dominion Transmission, Inc., 42709
Eastern Shore Natural Gas Co., 42709–42710
Empire District Electric Co., 42710
Gas Transmission Northwest Corp., 42710–42711
Iroquois Gas Transmission System, L.P., 42711
Kinder Morgan Interstate Gas Transmission LLC, 42711–42712
Natural Gas Pipeline Co. of America, 42712
Northern Natural Gas Co., 42712
Northwest Pipeline Corp., 42712–42713
Transcontinental Gas Pipe Line Corp., 42713

Federal Reserve System
NOTICES
Agency information collection activities; proposals, submissions, and approvals, 42742–42743

Federal Trade Commission
PROPOSED RULES
Fair Credit and Reporting Act:
Summaries of consumer rights and notices of duties, 41616–41626

Fish and Wildlife Service
NOTICES
Agency information collection activities; proposals, submissions, and approvals, 42762–42763
Comprehensive conservation plans; availability, etc.:
Squaw Creek National Wildlife Refuge, MO, 42763–42764
Endangered and threatened species and marine mammal permit applications, 42764

Forest Service
PROPOSED RULES
Special areas:
Inventoried roadless area management; State petitions, 41636–41641
NOTICES
Environmental statements; notice of intent:
Bridger-Teton National Forest, WY, 42646–42648
Meetings:
Resource Advisory Committees—
Shasta County, 42648
Reports and guidance documents; availability, etc.:
Inventoried roadless areas; management and protection; interim directive, 42648–42649

Health and Human Services Department
See Centers for Disease Control and Prevention
See Centers for Medicare & Medicaid Services
See Inspector General Office, Health and Human Services Department
See National Institutes of Health
See Substance Abuse and Mental Health Services Administration
RULES
Religious organizations; participation in HHS programs; equal treatment for faith-based organizations, 42586–42595
NOTICES
Meetings:
Dietary Guidelines Advisory Committee, 42743–42744

Homeland Security Department
See Federal Emergency Management Agency
NOTICES
Reports and guidance documents; availability, etc.:
National Environmental Policy Act; implementation—
Environmental Planning Program; management directive, 42760–42761

Housing and Urban Development Department
NOTICES
Grants and cooperative agreements; availability, etc.:
Homeless assistance; excess and surplus Federal property, 42762

Indian Affairs Bureau
NOTICES
Tribal-State Compacts approval; Class III (casino) gambling:
Washoe Tribe, NV and CA, 42764–42765

Industry and Security Bureau
NOTICES
Export transactions:
List of unverified persons in foreign countries, guidance to exporters as to ''red flags'' (Supplement No. 3 to 15 CFR part 732); update, 42652–42654

Inspector General Office, Health and Human Services Department
NOTICES
Program exclusions; list, 42745–42750

Interior Department
See Fish and Wildlife Service
See Indian Affairs Bureau
See Land Management Bureau
See Minerals Management Service
See National Park Service
See Surface Mining Reclamation and Enforcement Office

Internal Revenue Service
RULES
Income taxes:
Long-term contracts; partnership transactions, 42551–42559
Vested accrued vacation pay; transitional rule; temporary regulation removed, 42559–42560
NOTICES
Agency information collection activities; proposals, submissions, and approvals, 42805–42808

International Trade Administration
NOTICES
Antidumping:
Frozen and canned warmwater shrimp from—
China, 42654–42672
Vietnam, 42672–42687
Steel concrete reinforcing bars from—
Turkey, 42687
Reports and guidance documents; availability, etc.:
International drug pricing study
Hearing, 42688–42689
Applications, hearings, determinations, etc.:
Catawba College et al., 42687–42688
Cornell University, 42688

Labor Department
See Employment and Training Administration
See Employment Standards Administration
See Mine Safety and Health Administration
See Occupational Safety and Health Administration

Land Management Bureau
NOTICES
Environmental statements; availability, etc.:
Price Field Office planning area, UT; resource management plan, 42765
Tracy to Silver Lake Power Line Project, NV, 42765–42766
Environmental statements; record of decision:
Rogue National Wild and Scenic River, OR; Hellgate Recreation Area Management Plan, 42766–42767
Recreation management restrictions, etc.:
Nevada public lands; unlawful use of alcohol and drugs; supplementary rules, 42767

Minerals Management Service
NOTICES
Agency information collection activities; proposals, submissions, and approvals, 42767–42769

Mine Safety and Health Administration
PROPOSED RULES
Coal mine safety and health:
Underground mines—
High-voltage continuous mining machines; electrical safety standards, 42811–42840
Education and training:
Shaft and slope construction mine workers; training standards, 42841–42847

National Foundation on the Arts and the Humanities
NOTICES
Agency information collection activities; proposals, submissions, and approvals, 42782–42783

National Highway Traffic Safety Administration
RULES
Anthropomorphic test devices:
Occupant crash protection—-
Hybrid III six-year-old child weighted test dummy, 42595–42605

National Institutes of Health
NOTICES
Inventions, Government-owned; availability for licensing, 42750–42752
Meetings:
National Cancer Institute, 42752
National Institute of Arthritis and Musculoskeletal and Skin Diseases, 42755–42756
National Institute of Child Health and Human Development, 42753–42754
National Institute of Diabetes and Digestive and Kidney Diseases, 42752–42753
National Institute of Mental Health, 42753
National Institute of Neurological Disorders and Stroke, 42754
National Institute on Aging, 42755
National Institute on Alcohol Abuse and Alcoholism, 42754–42755
National Institute on Drug Abuse, 42754
Scientific Review Center, 42756–42759
Patent licenses; non-exclusive, exclusive, or partially exclusive:
Anjin Group, Inc., 42759

National Oceanic and Atmospheric Administration
NOTICES
Coastal zone management programs and estuarine sanctuaries:
State programs—
Intent to evaluate performance, 42689–42690
Reports and guidance documents; availability, etc.:
Strategic Plan, 42690

National Park Service
NOTICES
Environmental statements; notice of intent:
Cape Cod National Seashore; hunting policy, 42769
Meetings:
Aniakchak National Monument Subsistence Resource Commission, 42769–42770
Lake Clark National Park and Preserve Subsistence Resource Commission, 42770
Wrangell-St.Elias National Park Subsistence Resource Commission, 42770–42771
Native American human remains, funerary objects; inventory, repatriation, etc.:
American Museum of Natural History, New York, NY, 42771–42772
Longyear Museum of Anthropology, Colgate University, Hamilton, NY, 42772
Minneapolis Institute of Arts, Minneapolis, MN, 42772–42773
New York State Museum, Albany, NY, 42773–42774
Peabody Museum of Archaeology and Ethnology, Harvard University, Cambridge, MA, 42774–42775
South Dakota State Archaeological Research Center, Rapid City, SD and Army Corps of Engineers, Omaha, NE, 42775–42776

Nuclear Regulatory Commission
NOTICES
Applications, hearings, determinations, etc.:
AmerGen Energy Co., LLC, 42783–42784

Occupational Safety and Health Administration
NOTICES
Agency information collection activities; proposals, submissions, and approvals, 42781–42782

Peace Corps
NOTICES
Privacy Act:
Systems of records, 42784–42785

Securities and Exchange Commission
NOTICES
Agency information collection activities; proposals, submissions, and approvals, 42785–42786
Self-regulatory organizations; proposed rule changes:
International Securities Exchange, Inc., 42786–42788
National Stock Exchange, 42788–42800

Substance Abuse and Mental Health Services Administration
NOTICES
Agency information collection activities; proposals, submissions, and approvals, 42760

Surface Mining Reclamation and Enforcement Office
NOTICES
Agency information collection activities; proposals, submissions, and approvals, 42776

Surface Transportation Board
NOTICES
Railroad operation, acquisition, construction, etc.:
Branch & St. Joseph Counties Rail Users Association, Inc., 42803
Railroad services abandonment:
Burlington Northern & Santa Fe Railway Co., 42803–42804
Norfolk Southern Railway Co. et al., 42804–42805

Textile Agreements Implementation Committee
See Committee for the Implementation of Textile Agreements

Transportation Department
See Federal Aviation Administration
See National Highway Traffic Safety Administration
See Surface Transportation Board

NOTICES
Meetings:
Transportation Labor-Management Board, 42800–42801

Treasury Department
See Internal Revenue Service
NOTICES
Bonds, Treasury:
10-3/8 percent bonds (2004-2009); call for redemption, 42805

Veterans Affairs Department
NOTICES
Agency information collection activities; proposals, submissions, and approvals, 42808–42810

Separate Parts In This Issue

Part II
Labor Department, Mine Safety and Health Administration, 42811–42840

Part III
Labor Department, Mine Safety and Health Administration, 42841–42847

Reader Aids
Consult the Reader Aids section at the end of this issue for phone numbers, online resources, finding aids, reminders, and notice of recently enacted public laws.

To subscribe to the Federal Register Table of Contents LISTSERV electronic mailing list, go to http://listserv.access.gpo.gov and select Online mailing list archives, FEDREGTOC-L, Join or leave the list (or change settings); then follow the instructions.

CFR PARTS AFFECTED IN THIS ISSUE

A cumulative list of the parts affected this month can be found in the Reader Aids section at the end of this issue.

12 CFR

Proposed Rules:

1412 41606

14 CFR

39 42549

Proposed Rules:

39 41612

16 CFR

Proposed Rules:

698 41616

26 CFR

1 (2 documents) 42551, 42559

30 CFR

Proposed Rules:

18 42812
48 42842
75 42812

32 CFR

Proposed Rules:

635 41626

36 CFR

Proposed Rules:

294 41636

40 CFR

51 42560
52 42560
180 42560
194 42571
239 42583
257 42583

Proposed Rules:

62 41641
239 41644
257 41644

44 CFR

64 42584

45 CFR

74 42586
87 42586
92 42586
96 42586

49 CFR

571 42595
572 42595

Rules and Regulations

Federal Register
Vol. 69, No. 136
Friday, July 16, 2004

This section of the FEDERAL REGISTER contains regulatory documents having general applicability and legal effect, most of which are keyed to and codified in the Code of Federal Regulations, which is published under 50 titles pursuant to 44 U.S.C. 1510.

The Code of Federal Regulations is sold by the Superintendent of Documents. Prices of new books are listed in the first FEDERAL REGISTER issue of each week.

DEPARTMENT OF TRANSPORTATION

Federal Aviation Administration

14 CFR Part 39

[Docket No. 2003–NM–109–AD; Amendment 39–13728; AD 2004–14–19]

RIN 2120–AA64

Airworthiness Directives; Boeing Model 767 Series Airplanes

AGENCY: Federal Aviation Administration, DOT.

ACTION: Final rule.

SUMMARY: This amendment adopts a new airworthiness directive (AD), applicable to all Boeing Model 767 series airplanes, that requires repetitive detailed inspections of the aft pressure bulkhead for indications of ''oil cans'' and previous ''oil can'' repairs, and corrective actions, if necessary. An ''oil can'' is an area on a pressure dome web that moves when pushed from the forward side. This action is necessary to detect and correct the propagation of fatigue cracks in the vicinity of ''oil cans'' on the web of the aft pressure bulkhead, which could result in rapid decompression of the passenger cabin, possible damage or interference with the airplane control systems that pass through the bulkhead, and consequent loss of control of the airplane. This action is intended to address the identified unsafe condition.

DATES: Effective August 20, 2004.

The incorporation by reference of certain publications listed in the regulations is approved by the Director of the Federal Register as of August 20, 2004.

ADDRESSES: The service information referenced in this AD may be obtained from Boeing Commercial Airplanes, P.O. Box 3707, Seattle, Washington 98124–2207. This information may be examined at the Federal Aviation Administration (FAA), Transport Airplane Directorate, Rules Docket, 1601 Lind Avenue, SW., Renton, Washington; or at the National Archives and Records Administration (NARA). For information on the availability of this material at NARA, call (202) 741–6030, or go to: *http://www.archives.gov/federal_register/code_of_federal_regulations/ibr_locations.html.*

FOR FURTHER INFORMATION CONTACT: Suzanne Masterson, Aerospace Engineer, Airframe Branch, ANM–120S, FAA, Seattle Aircraft Certification Office, 1601 Lind Avenue, SW., Renton, Washington 98055–4056; telephone (425) 917–6441; fax (425) 917–6590.

SUPPLEMENTARY INFORMATION: A proposal to amend part 39 of the Federal Aviation Regulations (14 CFR part 39) to include an airworthiness directive (AD) that is applicable to all Boeing Model 767 series airplanes was published in the **Federal Register** on February 6, 2004 (69 FR 5771). That action proposed to require repetitive detailed inspections of the aft pressure bulkhead for indications of ''oil cans'' and previous ''oil can'' repairs, and corrective actions, if necessary. An ''oil can'' is an area on a pressure dome web that moves when pushed from the forward side.

Comments

Interested persons have been afforded an opportunity to participate in the making of this amendment. Due consideration has been given to the comments received.

Support for Proposed Rule

One commenter states that it supports the proposed rule.

Request for Clarification When Cause of Previous Repair Is Unknown

One commenter requests clarification on what to do when the cause of the damage for a previous repair of the aft pressure bulkhead is unknown. The commenter notes that the cause of the damage might not be possible to determine. The commenter questions if operators should assume the cause of the damage was due to an ''oil canning'' condition when the cause of the damage for a previous repair is unknown.

The FAA agrees that clarification is needed when the cause of the damage for a previous repair of the aft pressure bulkhead is unknown. Paragraph (c) of the final rule requires a detailed inspection if any previous ''oil can'' repair is found during the inspection of the aft pressure bulkhead required by paragraph (b) of the final rule. If the cause of the damage for a previous repair is unknown, operators should assume the repairs are ''oil can'' repairs. We have added the following text to paragraph (b) of the final rule: ''In the absence of information proving otherwise, assume a previous repair of the aft pressure bulkhead is an 'oil can' repair.''

Request To Clarify Reference

One commenter states that both service bulletins refer to Boeing 767 Airplane Maintenance Manual (AMM) 38–11–01/401 for the removal and installation of the potable water tanks. The commenter believes the correct reference is AMM 38–11–01/201. We infer that the commenter requests that the reference be clarified.

We agree that the reference for the removal and installation of the potable water tanks should be clarified and have confirmed that AMM 38–11–01/201 is the correct reference. We have added the following text to paragraph (a) of the final rule: ''Where Figure 5 of the service bulletin specifies to refer to Boeing 767 Airplane Maintenance Manual (AMM) 38–11–01/401 for the removal and installation of the potable water tanks, refer to AMM 38–11–01/201.''

Conclusion

After careful review of the available data, including the comments noted above, the FAA has determined that air safety and the public interest require the adoption of the rule with the changes previously described. The FAA has determined that these changes will neither increase the economic burden on any operator nor increase the scope of the AD.

Interim Action

This is considered to be interim action. The FAA may consider further rulemaking to reduce thresholds if cracks are reported earlier than the predicted fatigue life.

Cost Impact

There are approximately 890 airplanes of the affected design in the worldwide fleet. The FAA estimates that 398 airplanes of U.S. registry will be

affected by this AD, that it will take approximately 14 work hours per airplane to accomplish the required actions, and that the average labor rate is $65 per work hour. Based on these figures, the cost impact of the AD on U.S. operators is estimated to be $362,180, or $910 per airplane, per inspection cycle.

The cost impact figure discussed above is based on assumptions that no operator has yet accomplished any of the requirements of this AD action, and that no operator would accomplish those actions in the future if this AD were not adopted. The cost impact figures discussed in AD rulemaking actions represent only the time necessary to perform the specific actions actually required by the AD. These figures typically do not include incidental costs, such as the time required to gain access and close up, planning time, or time necessitated by other administrative actions.

Regulatory Impact

The regulations adopted herein will not have a substantial direct effect on the States, on the relationship between the national Government and the States, or on the distribution of power and responsibilities among the various levels of government. Therefore, it is determined that this final rule does not have federalism implications under Executive Order 13132.

For the reasons discussed above, I certify that this action (1) is not a ''significant regulatory action'' under Executive Order 12866; (2) is not a ''significant rule'' under DOT Regulatory Policies and Procedures (44 FR 11034, February 26, 1979); and (3) will not have a significant economic impact, positive or negative, on a substantial number of small entities under the criteria of the Regulatory Flexibility Act. A final evaluation has been prepared for this action and it is contained in the Rules Docket. A copy of it may be obtained from the Rules Docket at the location provided under the caption **ADDRESSES**.

List of Subjects in 14 CFR Part 39

Air transportation, Aircraft, Aviation safety, Incorporation by reference, Safety.

Adoption of the Amendment

■ Accordingly, pursuant to the authority delegated to me by the Administrator, the Federal Aviation Administration amends part 39 of the Federal Aviation Regulations (14 CFR part 39) as follows:

PART 39—AIRWORTHINESS DIRECTIVES

■ 1. The authority citation for part 39 continues to read as follows:

Authority: 49 U.S.C. 106(g), 40113, 44701.

§ 39.13 [Amended]

■ 2. Section 39.13 is amended by adding the following new airworthiness directive:

2004–14–19 Boeing: Amendment 39–13728. Docket 2003–NM–109–AD.

Applicability: All Model 767 series airplanes, certificated in any category.

Compliance: Required as indicated, unless accomplished previously.

To detect and correct the propagation of fatigue cracks in the vicinity of ''oil cans'' on the web of the aft pressure bulkhead, which could result in rapid decompression of the passenger cabin, possible damage or interference with the airplane control systems that pass through the bulkhead, and consequent loss of control of the airplane, accomplish the following:

Service Bulletin References

(a) The term ''service bulletin,'' as used in this AD, means the Accomplishment Instructions of the service bulletin specified in paragraph (a)(1) or (a)(2) of this AD, as applicable. Where Figure 5 of the service bulletin specifies to refer to Boeing 767 Airplane Maintenance Manual (AMM) 38–11–01/401 for the removal and installation of the potable water tanks, refer to AMM 38–11–01/201.

(1) For Model 767–200, –300, and –300F series airplanes: Boeing Alert Service Bulletin 767–53A0105, dated April 10, 2003.

(2) For Model 767–400ER series airplanes: Boeing Alert Service Bulletin 767–53A0106, dated April 10, 2003.

Initial and Repetitive Inspections

(b) Perform a detailed inspection of the aft pressure bulkhead for indications of ''oil cans'' and previous ''oil can'' repairs, in accordance with the service bulletin, at the applicable time specified in paragraph (b)(1) or (b)(2) of this AD. In the absence of information proving otherwise, assume a previous repair of the aft pressure bulkhead is an ''oil can'' repair. Repeat the detailed inspection thereafter at intervals not to exceed 6,000 flight cycles.

Note 1: For the purposes of this AD, a detailed inspection is defined as: ''An intensive visual examination of a specific structural area, system, installation, or assembly to detect damage, failure, or irregularity. Available lighting is normally supplemented with a direct source of good lighting at intensity deemed appropriate by the inspector. Inspection aids such as mirror, magnifying lenses, etc., may be used. Surface cleaning and elaborate access procedures may be required.''

(1) For Model 767–200 and –300 series airplanes: Prior to the accumulation of 50,000 total flight cycles, or within 1,000 flight cycles after the effective date of this AD, whichever is later.

(2) For Model 767–300F and –400ER series airplanes: Prior to the accumulation of 40,000 total flight cycles, or within 1,000 flight cycles after the effective date of this AD, whichever is later.

Indication of Previous ''Oil Can'' Repairs

(c) If any previous ''oil can'' repair is found during any detailed inspection required by paragraph (b) of this AD: Before further flight, do a detailed inspection of the web around any ''oil can'' repair for cracks or smaller ''oil cans,'' in accordance with the service bulletin.

(1) If any crack is found, before further flight, repair in accordance with the service bulletin. Where the service bulletin specifies to contact Boeing for repair, before further flight, repair per a method approved by the Manager, Seattle Aircraft Certification Office (ACO), FAA; or per data meeting the type certification basis of the airplane approved by a Boeing Company Designated Engineering Representative who has been authorized by the Manager, Seattle ACO, to make such findings. For a repair method to be approved, the approval must specifically reference this AD.

(2) If any ''oil can'' is found, before further flight, perform the surface high frequency eddy current (HFEC) inspection specified in paragraph (d) of this AD.

Indication of ''Oil Can''

(d) If any indication of an ''oil can'' is found during any detailed inspection specified in paragraph (b) or (c) of this AD: Before further flight, perform a surface HFEC inspection of the web around the periphery and in the center of the ''oil can'' indication for cracks, at all ''oil cans,'' and perform a detailed inspection of the web for cracks, in accordance with the service bulletin. Alternative inspection specified in the service bulletin is acceptable for this AD.

(1) If no crack is found and the ''oil can'' meets the allowable limits specified in the service bulletin, do the action in either paragraph (d)(1)(i) or (d)(1)(ii) of this AD.

(i) Repeat the surface HFEC inspection specified in paragraph (d) of this AD thereafter at intervals not to exceed 3,000 flight cycles.

(ii) Before further flight, repair the ''oil can'' in accordance with the service bulletin. Repair of all ''oil cans'' is considered a terminating action for the repetitive HFEC inspections required by paragraph (d)(1)(i) of this AD. However, continue to repeat the detailed inspection required by paragraph (b) of this AD.

(2) If no crack is found and the ''oil can'' does not meet the specified allowable limits specified in the service bulletin: Before further flight, repair the ''oil can'' in accordance with the service bulletin. If, following the repair, any ''oil can'' remains that meets the allowable limits specified in the service bulletin, do the action required by either paragraph (d)(1)(i) or (d)(1)(ii) of this AD.

(3) If any crack is found, before further flight, repair in accordance with the service bulletin. Where the service bulletin specifies to contact Boeing for appropriate action, before further flight, repair per a method

approved by the Manager, Seattle ACO, or per data meeting the type certification basis of the airplane approved by a Boeing Company Designated Engineering Representative who has been authorized by the Manager, Seattle ACO, to make such findings. For a repair method to be approved, the approval must specifically reference this AD.

Alternative Methods of Compliance

(e) In accordance with 14 CFR 39.19, the Manager, Seattle ACO, is authorized to approve alternative methods of compliance for this AD.

Incorporation by Reference

(f) Unless otherwise specified in this AD, the actions shall be done in accordance with Boeing Alert Service Bulletin 767–53A0105, dated April 10, 2003; or Boeing Alert Service Bulletin 767–53A0106, dated April 10, 2003; as applicable. This incorporation by reference was approved by the Director of the Federal Register in accordance with 5 U.S.C. 552(a) and 1 CFR part 51. Copies may be obtained from Boeing Commercial Airplanes, P.O. Box 3707, Seattle, Washington 98124–2207. Copies may be inspected at the FAA, Transport Airplane Directorate, 1601 Lind Avenue, SW., Renton, Washington; or at the National Archives and Records Administration (NARA). For information on the availability of this material at NARA, call (202) 741–6030, or go to: *http://www.archives.gov/federal_register/code_of_federal_regulations/ibr_locations.html.*

Effective Date

(g) This amendment becomes effective on August 20, 2004.

Issued in Renton, Washington, on July 1, 2004.

Kalene C. Yanamura,

Acting Manager, Transport Airplane Directorate, Aircraft Certification Service.

[FR Doc. 04–15759 Filed 7–15–04; 8:45 am]

BILLING CODE 4910–13–P

DEPARTMENT OF THE TREASURY

Internal Revenue Service

26 CFR Part 1

[TD 9137]

RIN 1545–BA81

Partnership Transactions Involving Long-Term Contracts

AGENCY: Internal Revenue Service (IRS), Treasury.

ACTION: Final regulations.

SUMMARY: This document contains final regulations relating to partnership transactions involving contracts accounted for under a long-term contract method of accounting. The regulations are necessary to resolve issues that were reserved in final regulations under section 460 that were published in the **Federal Register** on May 15, 2002, addressing other mid-contract changes in taxpayer engaged in completing such contracts. The effect of the regulations is to explain the tax consequences of these partnership transactions.

DATES: *Effective Date:* These regulations are effective July 16, 2004.

Applicability Date: These regulations apply to transactions on or after May 15, 2002.

FOR FURTHER INFORMATION CONTACT: Richard Probst at (202) 622–3060 (not a toll-free number).

SUPPLEMENTARY INFORMATION:

Background

Section 460 of the Internal Revenue Code generally requires that taxpayers determine taxable income from a long-term contract using the percentage-of-completion method (PCM). Under regulations finalized in 2001 (TD 8929, 2001–1 C.B. 756), a taxpayer using the PCM generally includes a portion of the total contract price in income for each taxable year that the taxpayer incurs contract costs allocable to the long-term contract. More specifically, to determine the income from a long-term contract, the taxpayer first computes the completion factor for the contract, which is the percentage of the estimated total allocable contract costs that the taxpayer has incurred (based on the all events test of section 461, including economic performance, regardless of the taxpayer's method of accounting) through the end of the taxable year. Second, the taxpayer computes the amount of cumulative gross receipts from the contract by multiplying the completion factor by the total contract price, which is the amount that the taxpayer reasonably expects to receive under the contract. Third, the taxpayer computes the amount of current-year gross receipts, which is the difference between the cumulative gross receipts for the current taxable year and the cumulative gross receipts for the immediately preceding taxable year. This difference may be a loss (a negative number) based on revisions to estimates of total allocable contract costs or total contract price. Fourth, the taxpayer takes into account both the current-year gross receipts and the amount of allocable contract costs actually incurred during the taxable year. To the extent any portion of the total contract price has not been included in taxable income by the completion year, section 460(b)(1) and the regulations require the taxpayer to include that portion in income for the taxable year following the completion year.

A long-term contract or a portion of a long-term contract that is exempt from the PCM may be accounted for under any permissible method, including the completed contract method (CCM). Under the CCM, a taxpayer does not take into account the gross contract price and allocable contract costs until the contract is complete, even though progress payments are received in years prior to completion.

A taxpayer generally must allocate costs to a contract subject to section 460(a) in the same manner as direct and indirect costs are capitalized to property produced by a taxpayer under section 263A. The regulations provide exceptions, however, that reflect the differences in the cost allocation rules of sections 263A and 460.

Section 460(h) directs the Secretary to prescribe regulations to the extent necessary or appropriate to carry out the purpose of section 460, including regulations to prevent a taxpayer from avoiding section 460 by using related parties, pass-through entities, intermediaries, options, and other similar arrangements.

On May 15, 2002, final regulations under section 460 were issued to address a mid-contract change in taxpayer engaged in completing a contract accounted for under a long-term contract method of accounting (TD 8995; 2002–23 I.R.B. 1070). The regulations divide the rules regarding a mid-contract change in taxpayer into two categories—constructive completion transactions and step-in-the-shoes transactions.

In a constructive completion transaction, the taxpayer that originally accounted for the long-term contract (old taxpayer) must recognize income from the contract as of the time of the transaction. The contract price used to determine the amount of income recognized by the taxpayer is the amount realized from the transaction, reduced by any amounts paid by the old taxpayer to the taxpayer subsequently accounting for the long-term contract (new taxpayer) that are allocable to the contract. Similarly, the new taxpayer in a constructive completion transaction is treated as though it entered into a new contract as of the date of the transaction. The new taxpayer's contract price is the amount that the new taxpayer reasonably expects to receive under the contract, reduced by the price paid by the new taxpayer for the contract, and increased by any amounts paid by the old taxpayer to the new taxpayer that are allocable to the contract. In contrast, in a step-in-the-shoes transaction, the

old taxpayer's obligation to account for the contract terminates on the date of the transaction and is assumed by the new taxpayer. The new taxpayer must assume the old taxpayer's methods of accounting for the contract, with both the contract price and allocable contract costs based on amounts taken into account by both parties.

The final section 460 regulations provide that a contribution to a partnership in a transaction described in section 721(a), a transfer of a partnership interest, and a distribution by a partnership to which section 731 applies (other than a distribution of a contract accounted for under a long-term contract method of accounting) are step-in-the-shoes transactions. In a notice issued concurrently with the final regulations, Notice 2002–37 (2002–23 I.R.B. 1095), the Treasury Department and IRS announced their intention to publish regulations setting forth the special rules that apply to these partnership transactions and described many of these rules. The notice further provided that these regulations would apply to contributions, transfers, and distributions occurring on or after May 15, 2002. On August 6, 2003, a notice of proposed rulemaking (REG–128203–02) relating to partnership transactions involving contracts accounted for under a long-term contract method of accounting was published in the **Federal Register** (68 FR 46516). Comments were received from the public in response to the notice of proposed rulemaking. No public hearing was requested or held. After consideration of all comments, the proposed regulations are adopted as amended by this Treasury decision.

Explanation and Summary of Contents

The regulations proposed on August 6, 2003 provide that the constructive completion rules do not apply to a transfer by a partnership (transferor partnership) of all of its assets and liabilities to a second partnership (transferee partnership) in an exchange described in section 721, followed by a distribution of the interest in the transferee partnership in liquidation of the transferor partnership, under § 1.708–1(b)(4) (relating to terminations under section 708(b)(1)(B)) or § 1.708–1(c)(3)(i) (relating to certain partnership mergers). One commentator suggested clarifying that the constructive completion rules apply to other distributions of an interest in a partnership (lower-tier partnership) holding one or more contracts accounted for under a long-term contract method of accounting by another partnership (upper-tier partnership). This comment has been adopted.

One commentator suggested that the final regulations clarify the application of the constructive completion rules if a partnership that holds a contract accounted for under a long-term contract method of accounting terminates under section 708(b)(1)(A) because the number of its owners is reduced to one. In response to this comment, the final regulations provide that the entire contract will be treated as being distributed from the partnership for purposes of the constructive completion rules, because the partnership ceases to exist for tax purposes. In addition, the final regulations provide that the partnership must apply the constructive completion rules immediately prior to the transaction or transactions resulting in the termination of the partnership.

Consistent with § 1.706–1(c)(2)(ii), the proposed regulations generally provide that upon the transfer or liquidation of an interest in a partnership holding a contract accounted for under a long-term contract method of accounting, the step-in-the-shoes rules apply to a contract accounted for under a long-term contract method of accounting only if the partnership's books are properly closed with respect to that contract under section 706. The proposed regulations provide that if the partnership's books are not closed with respect to the contract, the partnership shall compute its income or loss from each contract accounted for under a long-term contract method of accounting for the period that includes the date of the transfer or liquidation as though no change in taxpayer had occurred with respect to that contract, and may pro rate income from the contract under a reasonable method complying with section 706. The proposed regulations also provide similar rules for distributions of property (other than a contract accounted for under a long-term contract method of accounting) from a partnership holding a long-term contract, and for contributions of property (other than a contract accounted for under a long-term contract method of accounting) to a partnership holding a contract accounted for under a long-term contract method of accounting.

The proposed regulations requested comments regarding whether similar rules should be provided with respect to transfers of stock in an S corporation holding a contract accounted for under a long-term contract method of accounting. Under section 1377(a)(1) and § 1.1377–1(a), each shareholder's pro rata share of any S corporation item for any taxable year is generally the sum of the amounts determined with respect to the shareholder by assigning an equal portion of the item to each day of the S corporation's taxable year, and then dividing that portion pro rata among the shares outstanding on that day. Under section 1377(a)(2) and § 1.1377–1(b), an S corporation may elect to close its books if a shareholder's entire interest in an S corporation is terminated during the S corporation's taxable year, and the corporation and all affected shareholders agree. No comments were received.

The Treasury Department and IRS have concluded that similar rules should be provided for transfers of S corporation stock and conversions to and from S corporation status. Thus, the final regulations generally provide that upon the transfer of stock in an S corporation holding a contract accounted for under a long-term contract method of accounting, or the conversion to or from S corporation status by a corporation holding such a contract, the step-in-the-shoes rules apply to the contract only if the S corporation's books are closed under section 1362(e)(3), section 1362(e)(6)(C), section 1362(e)(6)(D), section 1377(a)(2), or § 1.1502–76. If the S corporation's books are not closed, the S corporation computes its income or loss from the contract for the period that includes the date of the transfer as though no change in taxpayer had occurred with respect to the contract, and must pro rate income from the contract in accordance with the rules generally applicable to such transfers or conversions.

In Rev. Rul. 73–301 (1973–2 C.B. 215), the IRS ruled that the progress payments described in the ruling did not constitute a liability within the meaning of section 752. See also Rev. Rul. 81–241 (1981–2 C.B. 146) (citing and following Rev. Rul. 73–301). The proposed regulations requested comments regarding whether there are circumstances under which the receipt of progress payments under a contract accounted for under a long-term contract method of accounting could give rise to a liability under section 752, and, if so, how the regulations would need to be revised to account for such liabilities. No written comments were received. However, if a contract accounted for under a long-term contract method of accounting is contributed to a partnership, then, to the extent that progress payments give rise to a liability, section 752(b) would require the transferring partner to reduce its basis in its partnership by the

amount of that liability, either when the contract is contributed (to the extent that the liability is allocated to other partners) or when the liability is extinguished. Thus, because the proposed regulations require the partner to reduce the partner's basis in its partnership interest by the amount of progress payments received, the proposed regulations could require two reductions in basis for the same payments.

Ordinarily, progress payments do not give rise to liabilities within the meaning of section 752 and the regulations thereunder. However, to the extent that there is a case in which a progress payment gives rise to such a liability, the Treasury Department and IRS agree that taxpayers should not be required to reduce their basis twice for the same progress payment, and believe that a similar rule should be provided for transfers to corporations. Accordingly, upon a contribution of a contract accounted for under a long-term contract method of accounting to a partnership or corporation, the final regulations provide that the required reduction in basis for progress payments received does not apply to the extent that such progress payments give rise to a liability (other than a liability described in section 357(c)(3)).

Finally, one commentator suggested that the regulations clarify that the fair market value of a contract contributed to a partnership does not necessarily equal the full amount of expected remaining profit on the contributed contract. The Treasury Department and IRS believe that it is sufficiently clear under the proposed regulations that the fair market value of the contributed contract is determined under general tax principles. Thus, this comment has not been adopted.

Special Analyses

It has been determined that this Treasury Decision is not a significant regulatory action as defined in Executive Order 12866. Therefore, a regulatory assessment is not required. It also has been determined that section 553(b) of the Administrative Procedure Act (5 U.S.C. chapter 5) does not apply to these regulations, and because the regulations do not impose a collection of information on small entities, the Regulatory Flexibility Act (5 U.S.C. chapter 6) does not apply. Pursuant to section 7805(f) of the Internal Revenue Code, these regulations were submitted to the Chief Counsel for Advocacy of the Small Business Administration for comment on its impact on small businesses.

Drafting Information

The principal authors of these regulations are Matthew Lay and Richard Probst of the Office of the Associate Chief Counsel (Passthroughs and Special Industries). However, personnel from other offices of the Treasury Department and IRS participated in their development.

List of Subjects in 26 CFR Part 1

Income taxes, Reporting and recordkeeping requirements.

Adoption of Amendments to the Regulations

■ Accordingly, 26 CFR part 1 is amended as follows:

PART 1—INCOME TAXES

■ **Paragraph 1**. The authority citation for part 1 continues to read, in part, as follows:

Authority: 26 U.S.C. 7805 * * *

■ **Par. 2**. Section 1.460–0 is amended as follows:

■ 1. Revising the entry for paragraph 1.460–4(k)(2)(iv).

■ 2. Adding entries for § 1.460–4(k)(2)(iv)(A) through (E).

■ 3. Revising the entry for § 1.460–4(k)(3)(iv).

■ 4. Revising the entry for § 1.460–4(k)(3)(iv)(A)(*2*) and adding entries for § 1.460–4(k)(3)(iv)(C) and (D).

■ 5. Revising the entry for § 1.460–4(k)(3)(v).

■ 6. Adding entries for § 1.460–4(k)(3)(v)(A) through (D).

■ 7. Adding entries for § 1.460–6(g)(3)(ii)(D)(*1*) and (*2*).

The revisions and additions read as follows:

§ 1.460–0 Outline of regulations under section 460.

* * * * *

§ 1.460–4 Methods of accounting for long-term contracts.

* * * * *

(k) * * *

(2) * * *

(iv) Special rules relating to distributions of certain contracts by a partnership.

(A) In general.

(B) Old taxpayer.

(C) New taxpayer.

(D) Basis rules.

(E) Section 751.

(*1*) In general.

(*2*) Ordering rules.

(3) * * *

(iv) Special rules related to certain corporate and partnership transactions.

(A) * * *

(*2*) Basis adjustment in excess of stock or partnership interest basis.

* * * * *

(C) Definition of old taxpayer and new taxpayer for certain partnership transactions.

(D) Exceptions to step-in-the-shoes rules for S corporations.

(v) Special rules relating to certain partnership transactions.

(A) Section 704(c).

(*1*) Contributions of contracts.

(*2*) Revaluations of partnership property.

(*3*) Allocation methods.

(B) Basis adjustments under sections 743(b) and 734(b).

(C) Cross reference.

(D) Exceptions to step-in-the-shoes rules.

* * * * *

§ 1.460–6 Look-back method.

* * * * *

(g) * * *

(3) * * *

(ii) * * *

(D) * * *

(*1*) In general.

(*2*) Special rules for certain pass-through entity transactions.

* * * * *

■ **Par. 3.** Section 1.460–4 is amended as follows:

■ 1. Revising the sixth sentence in paragraph (k)(1).

■ 2. Revising paragraph (k)(2)(iv).

■ 3. Removing the first word ''The'' in paragraph (k)(3)(i), adding in its place ''Except as otherwise provided in paragraph (k)(3)(v)(D) of this section, the''.

■ 4. Revising paragraph (k)(3)(i)(I).

■ 5. Redesignating paragraphs (k)(3)(i)(J), (K) and (L) as paragraphs (k)(3)(i)(K), (L) and (M), respectively.

■ 6. Adding a new paragraph (k)(3)(i)(J).

■ 7. Revising newly designated paragraph (k)(3)(i)(K).

■ 8. Revising paragraph (k)(3)(iv).

■ 9. Revising paragraph (k)(3)(v).

■ 10. Adding paragraph (k)(5) *Example 9* through *Example 13.*

■ 11. Revising the first sentence in paragraph (k)(6).

The additions and revisions read as follows.

§ 1.460–4 Methods of accounting for long-term contracts.

* * * * *

(k) * * *

(1) * * * Special rules relating to the treatment of certain partnership transactions are provided in paragraphs (k)(2)(iv) and (k)(3)(v) of this section. * * *

(2) * * *

(iv) *Special rules relating to distributions of certain contracts by a partnership*—(A) *In general.* The constructive completion rules of paragraph (k)(2) of this section apply both to the distribution of a contract accounted for under a long-term contract method of accounting by a

partnership to a partner and to the distribution of an interest in a partnership (lower-tier partnership) holding (either directly or through other partnerships) one or more contracts accounted for under a long-term contract method of accounting by another partnership (upper-tier partnership). Notwithstanding the previous sentence, the constructive completion rules of paragraph (k)(2) of this section do not apply to a transfer by a partnership (transferor partnership) of all of its assets and liabilities to a second partnership (transferee partnership) in an exchange described in section 721, followed by a distribution of the interest in the transferee partnership in liquidation of the transferor partnership, under § 1.708–1(b)(4) (relating to terminations under section 708(b)(1)(B)) or § 1.708–1(c)(3)(i) (relating to certain partnership mergers). If a partnership that holds a contract accounted for under a long-term contract method of accounting terminates under section 708(b)(1)(A) because the number of its owners is reduced to one, the entire contract will be treated as being distributed from the partnership for purposes of the constructive completion rules, and the partnership must apply paragraph (k)(2) of this section immediately prior to the transaction or transactions resulting in the termination of the partnership.

(B) *Old taxpayer.* The partnership that distributes the contract is treated as the old taxpayer for purposes of paragraph (k)(2)(ii) of this section. For purposes of determining the total contract price (or gross contract price) under paragraph (k)(2)(ii) of this section, the fair market value of the contract is treated as the amount realized from the transaction. For purposes of determining each partner's distributive share of partnership items, any income or loss resulting from the constructive completion must be allocated among the partners of the old taxpayer as though the partnership closed its books on the date of the distribution.

(C) *New taxpayer.* The partner receiving the distributed contract is treated as the new taxpayer for purposes of paragraph (k)(2)(iii) of this section. For purposes of determining the total contract price (or gross contract price) under paragraph (k)(2)(iii) of this section, the new taxpayer's basis in the contract (including the uncompleted property, if applicable) after the distribution (as determined under section 732) is treated as consideration paid by the new taxpayer that is allocable to the contract. Thus, the total contract price (or gross contract price) of the new contract is reduced by the partner's basis in the contract (including the uncompleted property, if applicable) immediately after the distribution.

(D) *Basis rules.* For purposes of determining the new taxpayer's basis in the contract (including the uncompleted property, if applicable) under section 732, and the amount of any basis adjustment under section 734(b), the partnership's basis in the contract (including the uncompleted property, if applicable) immediately prior to the distribution is equal to—

(*1*) The partnership's allocable contract costs (including transaction costs);

(*2*) Increased (or decreased) by the amount of cumulative taxable income (or loss) recognized by the partnership on the contract through the date of the distribution (including amounts recognized as a result of the constructive completion); and

(*3*) Decreased by the amounts that the partnership has received or reasonably expects to receive under the contract.

(E) *Section 751*—(*1*) *In general.* Contracts accounted for under a long-term contract method of accounting are unrealized receivables within the meaning of section 751(c). For purposes of section 751, the amount of ordinary income or loss attributable to a contract accounted for under a long-term contract method of accounting is the amount of income or loss that the partnership would take into account under the constructive completion rules of paragraph (k)(2) of this section if the contract were disposed of for its fair market value in a constructive completion transaction, adjusted to account for any income or loss from the contract that is allocated under section 706 to that portion of the taxable year of the partnership ending on the date of the distribution, sale, or exchange.

(*2*) *Ordering rules.* Because the distribution of a contract accounted for under a long-term contract method of accounting is the distribution of an unrealized receivable, section 751(b) may apply to the distribution. A partnership that distributes a contract accounted for under a long-term contract method of accounting must apply paragraph (k)(2)(ii) of this section before applying the rules of section 751(b) to the distribution.

(3) * * *

(i) * * *

(I) Contributions of contracts accounted for under a long-term contract method of accounting to which section 721(a) applies;

(J) Contributions of property (other than contracts accounted for under a long-term contract method of accounting) to a partnership that holds a contract accounted for under a long-term contract method of accounting;

(K) Transfers of partnership interests (other than transfers which cause the partnership to terminate under section 708(b)(1)(A));

* * * * *

(iv) *Special rules related to certain corporate and partnership transactions*—(A) *Old taxpayer—basis adjustment*—(*1*) *In general.* Except as provided in paragraph (k)(3)(iv)(A)(*2*) of this section, in the case of a transaction described in paragraph (k)(3)(i)(D), (E), or (I) of this section, the old taxpayer must adjust its basis in the stock or partnership interest of the new taxpayer by—

(*i*) Increasing such basis by the amount of gross receipts the old taxpayer has recognized under the contract; and

(*ii*) Reducing such basis by the amount of gross receipts the old taxpayer has received or reasonably expects to receive under the contract (except to the extent such gross receipts give rise to a liability other than a liability described in section 357(c)(3)).

(*2*) *Basis adjustment in excess of stock or partnership interest basis.* If the old and new taxpayer do not join in the filing of a consolidated Federal income tax return, the old taxpayer may not adjust its basis in the stock or partnership interest of the new taxpayer under paragraph (k)(3)(iv)(A)(*1*) of this section below zero and the old taxpayer must recognize ordinary income to the extent the basis in the stock or partnership interest of the new taxpayer otherwise would be adjusted below zero. If the old and new taxpayer join in the filing of a consolidated Federal income tax return, the old taxpayer must create an (or increase an existing) excess loss account to the extent the basis in the stock of the new taxpayer otherwise would be adjusted below zero under paragraph (k)(3)(iv)(A)(*1*) of this section. See § 1.1502–19 and 1.1502–32(a)(3)(ii).

(*3*) *Subsequent dispositions of certain contracts.* If the old taxpayer disposes of a contract in a transaction described in paragraph (k)(3)(i)(D), (E), or (I) of this section that the old taxpayer acquired in a transaction described in paragraph (k)(3)(i)(D), (E), or (I) of this section, the basis adjustment rule of this paragraph (k)(3)(iv)(A) is applied by treating the old taxpayer as having recognized the amount of gross receipts recognized by the previous old taxpayer under the contract and any amount recognized by the previous old taxpayer with respect to the contract in connection with the transaction in which the old taxpayer

acquired the contract. In addition, the old taxpayer is treated as having received or as reasonably expecting to receive under the contract any amount the previous old taxpayer received or reasonably expects to receive under the contract. Similar principles will apply in the case of multiple successive transfers described in paragraph (k)(3)(i)(D), (E), or (I) of this section involving the contract.

(B) *New taxpayer*—(*1*) *Contract price adjustment.* Generally, payments between the old taxpayer and the new taxpayer with respect to the contract in connection with the transaction do not affect the contract price. Notwithstanding the preceding sentence and paragraph (k)(3)(iii)(B) of this section, however, in the case of transactions described in paragraph (k)(3)(i)(B), (D), (E), or (I) of this section, the total contract price (or gross contract price) must be reduced to the extent of any amount recognized by the old taxpayer with respect to the contract in connection with the transaction (*e.g.,* any amount recognized under section 351(b) or section 357 that is attributable to the contract and any income recognized by the old taxpayer pursuant to the basis adjustment rule of paragraph (k)(3)(iv)(A) of this section).

(*2*) *Basis in contract.* The new taxpayer's basis in a contract (including the uncompleted property, if applicable) acquired in a transaction described in paragraphs (k)(3)(i)(A) through (E) or paragraph (k)(3)(i)(I) of this section will be computed under section 362, section 334, or section 723, as applicable. Upon a new taxpayer's completion (actual or constructive) of a CCM or a PCM contract acquired in a transaction described in paragraphs (k)(3)(i)(A) through (E) or paragraph (k)(3)(i)(I) of this section, the new taxpayer's basis in the contract (including the uncompleted property, if applicable) is reduced to zero. The new taxpayer is not entitled to a deduction or loss in connection with any basis reduction pursuant to this paragraph (k)(3)(iv)(B)(*2*).

(C) *Definition of old taxpayer and new taxpayer for certain partnership transactions.* For purposes of paragraphs (k)(3)(ii), (iii) and (iv) of this section, in the case of a transaction described in paragraph (k)(3)(i)(I) of this section, the partner contributing the contract to the partnership is treated as the old taxpayer, and the partnership receiving the contract from the partner is treated as the new taxpayer.

(D) *Exceptions to step-in-the-shoes rules for S corporations.* Upon a transfer described in paragraph (k)(3)(i)(F) of this section or a conversion described in paragraph (k)(3)(i)(G) of this section, paragraphs (k)(3)(ii) and (iii) of this section apply to a contract accounted for under a long-term contract method of accounting only if the S corporation's books are closed under section 1362(e)(3), section 1362(e)(6)(C), section 1362(e)(6)(D), section 1377(a)(2), or § 1.1502–76 on the date of the transfer or conversion. In these cases, the corporation is treated as both the old taxpayer and the new taxpayer for purposes of paragraphs (k)(3)(ii) and (iii) of this section. In all other cases involving these transfers, the corporation shall compute its income or loss from each contract accounted for under a long-term contract method of accounting for the period that includes the date of the transaction as though no change in taxpayer had occurred with respect to the contract, and must allocate the income or loss from the contract for that period in accordance with the rules generally applicable to transfers of S corporation stock and conversions to or from S corporation status. This paragraph (k)(3)(iv)(D) is applicable for transactions on or after July 16, 2004. In addition, this paragraph (k)(3)(iv)(D) may be relied upon for transactions on or after May 15, 2002.

(v) *Special rules relating to certain partnership transactions*—(A) *Section 704*(c)—(*1*) *Contributions of contracts.* The principles of section 704(c)(1)(A), section 737, and the regulations thereunder apply to income or loss with respect to a contract accounted for under a long-term contract method of accounting that is contributed to a partnership. The amount of built-in income or built-in loss attributable to a contributed contract that is subject to section 704(c)(1)(A) is determined as follows. First, the contributing partner must take into account any income or loss required under paragraph (k)(3)(ii)(A) of this section for the period ending on the date of the contribution. Second, the partnership must determine the amount of income or loss that the contributing partner would take into account if the contract were disposed of for its fair market value in a constructive completion transaction. This calculation is treated as occurring immediately after the partner has applied paragraph (k)(3)(ii)(A) of this section, but before the contribution to the partnership. Finally, this amount is reduced by the amount of income, if any, that the contributing partner is required to recognize as a result of the contribution.

(*2*) *Revaluations of partnership property.* The principles of section 704(c) and § 1.704–3 apply to allocations of income or loss with respect to a long-term contract that is revalued by a partnership under § 1.704–1(b)(2)(iv)(*f*). The amount of built-in income or built-in loss attributable to such a contract is equal to the amount of income or loss that would be taken into account if, at the time of the revaluation, the contract were disposed of for its fair market value in a constructive completion transaction.

(*3*) *Allocation methods.* In the case of a contract accounted for under the CCM, any built-in income or loss under section 704(c) is taken into account in the year the contract is completed. In the case of a contract accounted for under a long-term contract method of accounting other than the CCM, any built-in income or loss under section 704(c) must be taken into account in a manner that reasonably accounts for the section 704(c) income or loss over the remaining term of the contract.

(B) *Basis adjustments under sections 743(b) and 734(b).* For purposes of §§ 1.743–1(d), 1.755–1(b), and 1.755–1(c), the amount of ordinary income or loss attributable to a contract accounted for under a long-term contract method of accounting is the amount of income or loss that the partnership would take into account under the constructive completion rules of paragraph (k)(2) of this section if, at the time of the sale of a partnership interest or the distribution to a partner, the partnership disposed of the contract for its fair market value in a constructive completion transaction. If all or part of the transferee's basis adjustment under section 743(b) or the partnership's basis adjustment under section 734(b) is allocated to a contract accounted for under a long-term contract method of accounting, the basis adjustment shall reduce or increase, as the case may be, the affected party's income or loss from the contract. In the case of a contract accounted for under the CCM, the basis adjustment is taken into account in the year in which the contract is completed. In the case of a contract accounted for under a long-term contract method of accounting other than the CCM, the portion of that basis adjustment that is recovered in each taxable year of the partnership must be determined by the partnership in a manner that reasonably accounts for the adjustment over the remaining term of the contract.

(C) *Cross reference.* See paragraph (k)(2)(iv)(E) of this section for rules relating to the application of section 751 to the transfer of an interest in a partnership holding a contract accounted for under a long-term contract method of accounting.

(D) *Exceptions to step-in-the-shoes rules.* Upon a contribution described in

paragraph (k)(3)(i)(J) of this section, a transfer described in paragraph (k)(3)(i)(K) of this section, or a distribution described in paragraph (k)(3)(i)(L) of this section, paragraphs (k)(3)(ii) and (iii) of this section apply to a contract accounted for under a long-term contract method of accounting only if the partnership's books are properly closed with respect to that contract under section 706. In these cases, the partnership is treated as both the old taxpayer and the new taxpayer for purposes of paragraphs (k)(3)(ii) and (iii) of this section. In all other cases involving these transactions, the partnership shall compute its income or loss from each contract accounted for under a long-term contract method of accounting for the period that includes the date of the transaction as though no change in taxpayer had occurred with respect to the contract, and must allocate the income or loss from the contract for that period under a reasonable method complying with section 706.

* * * * *

(5) * * *

Example 9. Constructive completion—PCM—distribution of contract by partnership —(i) *Facts.* In Year 1, W, X, Y, and Z each contribute $100,000 to form equal partnership PRS. In Year 1, PRS enters into a contract. The total contract price is $1,000,000 and the estimated total allocable contract costs are $800,000. In Year 1, PRS incurs costs of $600,000 and receives $650,000 in progress payments under the contract. Under the contract, PRS performed all of the services required in order to be entitled to receive the progress payments, and there was no obligation to return the payments or perform any additional services in order to retain the payments. PRS properly accounts for the contract under the PCM. In Year 2, PRS distributes the contract to X in liquidation of X's interest. PRS incurs no costs and receives no progress payments in Year 2 prior to the distribution. At the time of the distribution, PRS's only asset other than the long-term contract and the partially constructed property is $450,000 cash ($400,000 initially contributed and $50,000 in excess progress payments). The fair market value of the contract is $150,000. Pursuant to the distribution, X assumes PRS's contract obligations and rights. In Year 2, X incurs additional allocable contract costs of $50,000. X correctly estimates at the end of Year 2 that X will have to incur an additional $75,000 of allocable contract costs in Year 3 to complete the contract (rather than $150,000 as originally estimated by PRS). Assume that X properly accounts for the contract under the PCM, that PRS has no income or loss other than income or loss from the contract, and that PRS has an election under section 754 in effect in Year 2.

(ii) *Tax consequences to PRS.* For Year 1, PRS reports receipts of $750,000 (the completion factor multiplied by total contract price ($600,000/$800,000 × $1,000,000)) and costs of $600,000, for a profit of $150,000, which is allocated equally among W, X, Y, and Z ($37,500 each). Immediately prior to the distribution of the contract to X in Year 2, the contract is deemed completed. Under paragraph (k)(2)(iv)(B) of this section, the fair market value of the contract ($150,000) is treated as the amount realized from the transaction. For purposes of applying the PCM in Year 2, the total contract price is $800,000 (the sum of the amounts received under the contract and the amount treated as realized from the transaction ($650,000 + $150,000)) and the total allocable contract costs are $600,000. Thus, in Year 2 PRS reports receipts of $50,000 (total contract price minus receipts already reported ($800,000 − $750,000)), and costs incurred in Year 2 of $0, for a profit of $50,000. Under paragraph (k)(2)(iv)(B) of this section, this profit must be allocated among W, X, Y, and Z as though the partnership closed its books on the date of the distribution. Accordingly, each partner's distributive share of this income is $12,500.

(iii) *Tax consequences to X.* X's basis in its interest in PRS immediately prior to the distribution is $150,000 (X's $100,000 initial contribution, increased by $37,500, X's distributive share of Year 1 income, and $12,500, X's distributive share of Year 2 income). Under paragraph (k)(2)(iv)(D) of this section, PRS's basis in the contract (including the uncompleted property, if applicable) immediately prior to the distribution is equal to $150,000 (the partnership's allocable contract costs, $600,000, increased by the amount of income recognized by PRS on the contract through the date of the distribution (including amounts recognized as a result of the constructive completion), $200,000, decreased by the amounts that the partnership has received or reasonably expects to receive under the contract, $650,000). Under section 732, X's basis in the contract (including the uncompleted property) after the distribution is $150,000. Under paragraph (k)(2)(iv)(C) of this section, X's basis in the contract (including the uncompleted property) is treated as consideration paid by X that is allocable to the contract. X's total contract price is $200,000 (the amount remaining to be paid under the terms of the contract less the consideration allocable to the contract ($350,000–$150,000)). For Year 2, X reports receipts of $80,000 (the completion factor multiplied by the total contract price [($50,000/$125,000) x $200,000]) and costs of $50,000 (the costs incurred after the distribution of the contract), for a profit of $30,000. For Year 3, X reports receipts of $120,000 (the total contract price minus receipts already reported ($200,000 − $80,000)) and costs of $75,000, for a profit of $45,000.

(iv) *Section 734(b).* Because X's basis in the contract (including the uncompleted property) immediately after the distribution, $150,000, is equal to PRS's basis in the contract (including the uncompleted property) immediately prior to the distribution, there is no basis adjustment under section 734(b).

Example 10. Constructive completion—CCM—distribution of contract by partnership —(i) *Facts.* The facts are the same as in *Example 9,* except that PRS and X properly account for the contract under the CCM.

(ii) *Tax consequences to PRS.* PRS reports no income or costs from the contract in Year 1. Immediately prior to the distribution of the contract to X in Year 2, the contract is deemed completed. Under paragraph (k)(2)(iv)(B) of this section, the fair market value of the contract ($150,000) is treated as the amount realized from the transaction. For purposes of applying the CCM in Year 2, the gross contract price is $800,000 (the sum of the amounts received under the contract and the amount treated as realized from the transaction ($650,000 + $150,000)) and the total allocable contract costs are $600,000. Thus, in Year 2 PRS reports profits of $200,000 ($800,000 − $600,000). This profit must be allocated among W, X, Y, and Z as though the partnership closed its books on the date of the distribution. Accordingly, each partner's distributive share of this income is $50,000.

(iii) *Tax consequences to X.* X's basis in its interest in PRS immediately prior to the distribution is $150,000 ($100,000 initial contribution, increased by $50,000, X's distributive share of Year 2 income). Under paragraph (k)(2)(iv)(D) of this section, PRS's basis in the contract (including the uncompleted property, if applicable) immediately prior to the distribution is equal to $150,000 (the partnership's allocable contract costs, $600,000, increased by the amount of cumulative taxable income recognized by PRS on the contract through the date of the distribution (including amounts recognized as a result of the constructive completion), $200,000, decreased by the amounts that the partnership has received or reasonably expects to receive under the contract, $650,000). Under section 732, X's basis in the contract (including the uncompleted property) after the distribution is $150,000. Under paragraph (k)(2)(iv)(C) of this section, X's basis in the contract is treated as consideration paid by X that is allocable to the contract. Under the CCM, X reports no gross receipts or costs in Year 2. For Year 3, the completion year, X reports its gross contract price of $200,000 (the amount remaining to be paid under the terms of the contract less the consideration allocable to the contract ($350,000 − $150,000)) and its total allocable contract costs of $125,000 (the allocable contract costs that X incurred to complete the contract ($50,000 + $75,000)), for a profit of $75,000.

(iv) *Section 734(b).* The results under section 734(b) are the same as in Example 9.

Example 11. Step-in-the-shoes—PCM—contribution of contract to partnership —(i) *Facts.* In Year 1, X enters into a contract that X properly accounts for under the PCM. The total contract price is $1,000,000 and the estimated total allocable contract costs are $800,000. In Year 1, X incurs costs of $600,000 and receives $650,000 in progress payments under the contract. Under the contract, X performed all of the services required in order to be entitled to receive the progress payments, and there was no obligation to return the payments or perform any additional services in order to retain the

payments. In Year 2, X contributes the contract (including the uncompleted property) with a basis of $0 and $125,000 of cash to partnership PRS in exchange for a one-fourth partnership interest. X incurs costs of $10,000, and receives no progress payments in Year 2 prior to the contribution of the contract. X and the other three partners of PRS share equally in its capital, profits, and losses. The parties determine that, at the time of the contribution, the fair market value of the contract is $160,000. Following the contribution in Year 2, PRS incurs additional allocable contract costs of $40,000. PRS correctly estimates at the end of Year 2 that it will have to incur an additional $75,000 of allocable contract costs in Year 3 to complete the contract (rather than $150,000 as originally estimated by PRS).

(ii) *Tax consequences to X.* For Year 1, X reports receipts of $750,000 (the completion factor multiplied by the total contract price ($600,000/$800,000 × $1,000,000)) and costs of $600,000, for a profit of $150,000. Because the mid-contract change in taxpayer results from a transaction described in paragraph (k)(3)(i)(I) of this section, X is not treated as completing the contract in Year 2. Under paragraph (k)(3)(ii)(A) of this section, for Year 2, X reports receipts of $12,500 (the completion factor multiplied by the total contract price ($610,000/$800,000 × $1,000,000, or $762,500), decreased by receipts already reported, $750,000) and costs of $10,000, for a profit of $2,500. Under section 722, X's initial basis in its interest in PRS is $125,000. Pursuant to paragraph (k)(3)(iv)(A)(1) of this section, X must increase its basis in its interest in PRS by the amount of gross receipts X recognized under the contract, $762,500, and reduce its basis by the amount of gross receipts X received under the contract, the $650,000 in progress payments. Accordingly, X's basis in its interest in PRS is $237,500.

(iii) *Tax consequences to PRS.* Because the mid-contract change in taxpayer results from a step-in-the-shoes transaction, PRS must account for the contract using the same methods of accounting used by X prior to the transaction. The total contract price is the sum of any amounts that X and PRS have received or reasonably expect to receive under the contract, and total allocable contract costs are the allocable contract costs of X and PRS. For Year 2, PRS reports receipts of $134,052 (the completion factor multiplied by the total contract price [($650,000/$725,000) − $1,000,000], $896,552, decreased by receipts reported by X, $762,500) and costs of $40,000, for a profit of $94,052. For Year 3, PRS reports receipts of $103,448 (the total contract price minus prior year receipts ($1,000,000 × $896,552)) and costs of $75,000, for a profit of $28,448.

(iv) *Section 704(c).* The principles of section 704(c) and § 1.704–3 apply to allocations of income or loss with respect to the contract contributed by X. In this case, the amount of built-in income that is subject to section 704(c) is the amount of income or loss that the contributing partner would take into account if the contract were disposed of for its fair market value in a constructive completion transaction. This calculation is treated as occurring immediately after the partner has applied paragraph (k)(3)(ii)(A) of this section, but before the contribution to the partnership. In a constructive completion transaction, the total contract price would be $810,000 (the sum of the amounts received under the contract and the amount realized in the deemed sale ($650,000 + $160,000)). X would report receipts of $47,500 (total contract price minus receipts already reported ($810,000 − $762,500)) and costs of $0, for a profit of $47,500. Thus, the amount of built-in income that is subject to section 704(c) is $47,500. The partnership must apply section 704(c) to this income in a manner that reasonably accounts for the income over the remaining term of the contract. For example, in Year 2, PRS could allocate $26,810 to X under section 704(c) (the amount of built-in income, $47,500, multiplied by a fraction, the numerator of which is the completion factor for the year, $650,000/725,000, less the completion factor for the prior year, $610,000/$800,000, and the denominator of which is 100 percent reduced by the completion factor for the taxable year preceding the event creating the section 704(c) income or loss, $610,000/$800,000). The remaining $67,242 would be allocated equally among all of the partners. In Year 3, the completion year, PRS could allocate $20,690 to X under section 704(c) ($47,500 × [($725,000/$725,000 − $650,000/$725,000) / (100 percent − $610,000/$800,000)]). The remaining $7,758 would be allocated equally among all the partners.

Example 12. Step-in-the-shoes—CCM—contribution of contract to partnership —(i) *Facts.* The facts are the same as in *Example 11,* except that X and PRS properly account for the contract under the CCM, and X has a basis of $610,000 in the contract (including the uncompleted property).

(ii) *Tax consequences to X.* X reports no income or costs from the contract in Years 1 or 2. X is not treated as completing the contract in Year 2. Under section 722, X's initial basis in its interest in PRS is $735,000 (the sum of $125,000 cash and X's basis of $610,000 in the contract (including the uncompleted property)). Pursuant to paragraph (k)(3)(iv)(A)(*1*)(*ii*) of this section, X must reduce its basis in its interest in PRS by the amount of gross receipts X received under the contract, or $650,000. Accordingly, X's basis in its interest in PRS is $85,000.

(iii) *Tax consequences to PRS.* PRS must account for the contract using the same methods of accounting used by X prior to the transaction. Under the CCM, PRS reports no gross receipts or costs in Year 2. For Year 3, the completion year, PRS reports its gross contract price of $1,000,000 (the sum of any amounts that X and PRS have received or reasonably expect to receive under the contract), and total allocable contract costs of $725,000 (the allocable contract costs of X and PRS), for a profit of $275,000.

(iv) *Section 704(c).* In this case, the amount of built-in income that is subject to section 704(c) is the amount of income or loss that the contributing partner would take into account if the contract were disposed of for its fair market value in a constructive completion transaction. This calculation is treated as occurring immediately after the partner has applied paragraph (k)(3)(ii)(A) of this section, but before the contribution to the partnership. In a constructive completion transaction, X would report its gross contract price of $810,000 (the sum of the amounts received under the contract and the amount realized in the deemed sale ($650,000 + $160,000)) and its total allocable contract costs of $610,000, for a profit of $200,000. Thus, the amount of built-in income that is subject to section 704(c) is $200,000. Out of PRS's income of $275,000, in Year 3, $200,000 must be allocated to X under section 704(c), and the remaining $75,000 is allocated equally among all of the partners.

Example 13. Step-in-the-shoes—PCM—transfer of a partnership interest —(i) *Facts.* In Year 1, W, X, Y, and Z each contribute $100,000 to form equal partnership PRS. In Year 1, PRS enters into a contract. The total contract price is $1,000,000 and the estimated total allocable contract costs are $800,000. In Year 1, PRS incurs costs of $600,000 and receives $650,000 in progress payments under the contract. Under the contract, PRS performed all of the services required in order to be entitled to receive the progress payments, and there was no obligation to return the payment or perform any additional services in order to retain the payments. PRS properly accounts for the contract under the PCM. In Year 2, W transfers W's interest in PRS to T for $150,000. Assume that $10,000 of PRS's Year 2 costs are incurred prior to the transfer, $40,000 are incurred after the transfer; and that PRS receives no progress payments in Year 2. Also assume that the fair market value of the contract on the date of the transfer is $160,000, that PRS closes its books with respect to the contract under section 706 on the date of the transfer, and that PRS correctly estimates at the end of Year 2 that it will have to incur an additional $75,000 of allocable contract costs in Year 3 to complete the contract (rather than $150,000 as originally estimated by PRS).

(ii) *Income reporting for period ending on date of transfer.* For Year 1, PRS reports receipts of $750,000 (the completion factor multiplied by total contract price ($600,000/$800,000 × $1,000,000)) and costs of $600,000, for a profit of $150,000. This profit is allocated equally among W, X, Y, and Z ($37,500 each). Under paragraph (k)(3)(ii)(A) of this section, for the part of Year 2 ending on the date of the transfer of W's interest, PRS reports receipts of $12,500 (the completion factor multiplied by the total contract price ($610,000/$800,000 × $1,000,000) minus receipts already reported ($750,000)) and costs of $10,000 for a profit of $2,500. This profit is allocated equally among W, X, Y, and Z ($625 each).

(iii) *Income reporting for period after transfer.* PRS must continue to use the PCM. For the part of Year 2 beginning on the day after the transfer, PRS reports receipts of $134,052 (the completion factor multiplied by the total contract price decreased by receipts reported by PRS for the period ending on the date of the transfer [($650,000/$725,000 × $1,000,000)—$762,500]) and costs of $40,000, for a profit of $94,052. This profit is shared equally among T, X, Y, and Z ($23,513 each). For Year 3, PRS reports receipts of $103,448 (the total contract price

minus prior year receipts ($1,000,000 − $896,552)) and costs of $75,000, for a profit of $28,448. The profit for Year 3 is shared equally among T, X, Y, and Z ($7,112 each).

(iv) *Tax Consequences to W.* W's amount realized is $150,000. W's adjusted basis in its interest in PRS is $138,125 ($100,000 originally contributed, plus $37,500, W's distributive share of PRS's Year 1 income, and $625, W's distributive share of PRS's Year 2 income prior to the transfer). Accordingly, W's income from the sale of W's interest in PRS is $11,875. Under paragraph (k)(2)(iv)(E) of this section, for purposes of section 751(a), the amount of ordinary income attributable to the contract is determined as follows. First, the partnership must determine the amount of income or loss from the contract that is allocated under section 706 to the period ending on the date of the sale ($625). Second, the partnership must determine the amount of income or loss that the partnership would take into account under the constructive completion rules of paragraph (k)(2) of this section if the contract were disposed of for its fair market value in a constructive completion transaction. Because PRS closed its books under section 706 with respect to the contract on the date of the sale, this calculation is treated as occurring immediately after the partnership has applied paragraph (k)(3)(ii)(A) of this section on the date of the sale. In a constructive completion transaction, the total contract price would be $810,000 (the sum of the amounts received under the contract and the amount realized in the deemed sale ($650,000 + $160,000)). PRS would report receipts of $47,500 (total contract price minus receipts already reported ($810,000 − $762,500)) and costs of $0, for a profit of $47,500. Thus, the amount of ordinary income attributable to the contract is $47,500, and W's share of that income is $11,875. Thus, under § 1.751–1(a), all of W's $11,875 of income from the sale of W's interest in PRS is ordinary income.

(v) *Tax Consequences to T.* T's adjusted basis for its interest in PRS is $150,000. Under § 1.743–1(d)(2), the amount of income that would be allocated to T if the contract were disposed of for its fair market value (adjusted to account for income from the contract for the portion of PRS's taxable year that ends on the date of the transfer) is $11,875. Under § 1.743–1(b), the amount of T's basis adjustment under section 743(b) is $11,875. Under paragraph (k)(3)(v)(B) of this section, the portion of T's basis adjustment that is recovered in Year 2 and Year 3 must be determined by PRS in a manner that reasonably accounts for the adjustment over the remaining term of the contract. For example, PRS could recover $6,703 of the adjustment in Year 2 (the amount of the basis adjustment, $11,875, multiplied by a fraction, the numerator of which is the excess of the completion factor for the year, $650,000/$725,000, less the completion factor for the prior year, $610,000/$800,000, and the denominator of which is 100 percent reduced by the completion factor for the taxable year preceding the transfer, $610,000/$800,000). T's distributive share of income in Year 2 from the contract would be adjusted from $23,513 to $16,810 as a result of the basis adjustment. In Year 3, the completion year, PRS could recover $5,172 of the adjustment ($11,875 × [($725,000/$725,000 − $650,000/$725,000) / (100 percent − $610,000/$800,000)]). T's distributive share of income in Year 3, the completion year, from the contract would be adjusted from $7,112 to $1,940 as a result of the basis adjustment.

* * * * *

(6) *Effective date.* Except as provided in paragraph (k)(3)(iv)(D) of this section, this paragraph (k) is applicable for transactions on or after May 15, 2002.

* * *

■ **Par. 4.** Section 1.460–6 is amended by revising paragraphs (g)(3)(ii)(D) and (g)(4) to read as follows:

§ 1.460–6 Look-back method.

* * * * *

(g) * * *

(3) * * *

(ii) * * *

(D) *Information old taxpayer must provide*—(*1*) *In general.* Except as provided in paragraph (g)(3)(ii)(D)(*2*) of this section, in order to help the new taxpayer to apply the look-back method with respect to pre-transaction taxable years, any old taxpayer that accounted for income from a long-term contract under the PCM or PCCM for either regular or alternative minimum tax purposes is required to provide the information described in this paragraph to the new taxpayer by the due date (not including extensions) of the old taxpayer's income tax return for the first taxable year ending on or after a step-in-the-shoes transaction described in § 1.460–4(k)(3)(i). The required information is as follows—

(*i*) The portion of the contract reported by the old taxpayer under PCM for regular and alternative minimum tax purposes (*i.e.*, whether the old taxpayer used PCM, the 40/60 PCCM method, or the 70/30 PCCM method);

(*ii*) Any submethods used in the application of PCM (*e.g.*, the simplified cost-to-cost method or the 10-percent method);

(*iii*) The amount of total contract price reported by year;

(*iv*) The numerator and the denominator of the completion factor by year;

(*v*) The due date (not including extensions) of the old taxpayer's income tax returns for each taxable year in which income was required to be reported;

(*vi*) Whether the old taxpayer was a corporate or a noncorporate taxpayer by year; and

(*vii*) Any other information required by the Commissioner by administrative pronouncement.

(2) Special rules for certain pass-through entity transactions. For purposes of paragraph (g)(3)(ii)(D)(*1*) of this section, in the case of a transaction described in § 1.460–4(k)(3)(i)(I), the contributing partner is treated as the old taxpayer, and the partnership is treated as the new taxpayer. In the case of transactions described in § 1.460–4(k)(3)(i)(F), (G), (J), (K), or (L), the old taxpayer is not required to provide the information described in paragraph (g)(3)(ii)(D)(*1*) of this section, because information necessary for the new taxpayer to apply the look-back method is provided by the pass-through entity. This paragraph (g)(3)(ii)(D) is applicable for transactions on or after August 6, 2003.

* * * * *

(4) *Effective date.* Except as provided in paragraph (g)(3)(ii)(D) of this section, this paragraph (g) is applicable for transactions on or after May 15, 2002.

* * * * *

■ **Par. 5.** In § 1.704–3, a sentence is added at the end of paragraph (a)(3)(ii) to read as follows:

§ 1.704–3 Contributed property.

(a) * * *

(3) * * *

(ii) * * * *See* § 1.460–4(k)(3)(v)(A) for a rule relating to the amount of built-in income or built-in loss attributable to a contract accounted for under a long-term contract method of accounting.

* * * * *

■ **Par. 6.** Section 1.722–1 is amended by adding a sentence between the sixth and seventh sentences to read as follows:

§ 1.722–1 Basis of contributing partner's interest.

* * * See § 1.460–4(k)(3)(iv)(A) for rules relating to basis adjustments required where a contract accounted for under a long-term contract method of accounting is transferred in a contribution to which section 721(a) applies.

* * * * *

■ **Par. 7.** A sentence is added at the end of § 1.723–1 to read as follows:

§ 1.723–1 Basis of property contributed to partnership.

* * * See § 1.460–4(k)(3)(iv)(B)(*2*) for rules relating to adjustments to the basis of contracts accounted for using a long-term contract method of accounting that are acquired in certain contributions to which section 721(a) applies.

■ **Par. 8.** In § 1.732–1, a sentence is added at the end of paragraph (c)(1)(i) to read as follows:

§ 1.732–1 Basis of distributed property other than money.

* * * * *

(c) * * *

(1) * * *

(i) * * * See § 1.460–4(k)(2)(iv)(D) for a rule determining the partnership's basis in a long-term contract accounted for under a long-term contract method of accounting.

* * * * *

■ **Par. 9.** In § 1.734–1, the undesignated paragraph immediately following paragraph (b)(1)(ii) is revised to read as follows:

§ 1.734–1 Optional adjustment to basis of undistributed partnership property.

* * * * *

(b) * * *

(1) * * *

(ii) * * *

See § 1.460–4(k)(2)(iv)(D) for a rule determining the partnership's basis in a long-term contract accounted for under a long-term contract method of accounting. The provisions of this paragraph (b)(1) are illustrated by the following examples:

* * * * *

■ **Par. 10.** Section 1.743–1 is amended as follows:

■ 1. A sentence is added at the end of paragraph (d)(2).

■ 2. A sentence is added at the end of paragraph (j)(2).

The additions read as follows:

§ 1.743–1 Optional adjustment to basis of partnership property.

* * * * *

(d) * * *

(2) * * * See § 1.460–4(k)(3)(v)(B) for a rule relating to the computation of income or loss that would be allocated to the transferee from a contract accounted for under a long-term contract method of accounting as a result of the hypothetical transaction.

* * * * *

(j) * * *

(2) * * * See § 1.460–4(k)(3)(v)(B) for rules relating to the effect of a basis adjustment under section 743(b) that is allocated to a contract accounted for under a long-term contract method of accounting in determining the transferee's distributive share of income or loss from the contract.

* * * * *

■ **Par. 11.** In § 1.751–1, a sentence is added at the end of paragraph (a)(2) to read as follows:

§ 1.751–1 Unrealized receivables and inventory items.

(a) * * *

(2) * * * See § 1.460–4(k)(2)(iv)(E) for rules relating to the amount of ordinary income or loss attributable to a contract accounted for under a long-term contract method of accounting.

* * * * *

■ **Par. 12.** Section 1.755–1 is amended as follows.

■ 1. Adding a sentence at the end of paragraph (b)(1)(ii).

■ 2. Paragraph (c)(5) is redesignated as paragraph (c)(6).

■ 3. New paragraph (c)(5) is added.

The additions read as follows:

§ 1.755–1 Rules for allocation of basis.

* * * * *

(b) * * *

(1) * * *

(ii) * * * See § 1.460–4(k)(3)(v)(B) for a rule relating to the computation of income or loss that would be allocated to the transferee from a contract accounted for under a long-term contract method of accounting as a result of the hypothetical transaction.

* * * * *

(c) * * *

(5) *Cross reference.* See § 1.460–4(k)(3)(v)(B) for a rule relating to the computation of unrealized appreciation or depreciation in a contract accounted for under a long-term contract method of accounting.

* * * * *

■ **Par. 13.** Section 1.1362–3 is amended by adding a sentence at the end of paragraph (a) to read as follows:

§ 1.1362–3 Treatment of S termination year.

(a) * * * See § 1.460–4(k)(3)(iv)(D) for rules relating to the computation of the S corporation's income or loss from a contract accounted for under a long-term contract method of accounting in the S termination year.

* * * * *

■ **Par. 14.** Section 1.1377–1 is amended by adding a sentence is at the end of paragraph (a)(1) to read as follows:

§ 1.1377–1 Pro rata share.

(a) * * *

(1) * * * See § 1.460–4(k)(3)(iv)(D) for rules relating to the computation of the shareholders' pro rata share of S corporation's income or loss from a contract accounted for under a long-term contract method of accounting.

* * * * *

Mark E. Matthews,

Deputy Commissioner for Services and Enforcement.

Approved: July 1, 2004.

Gregory Jenner,

Acting Assistant Secretary of the Treasury.

[FR Doc. 04–15833 Filed 7–15–04; 8:45 am]

BILLING CODE 4830–01–P

DEPARTMENT OF THE TREASURY

Internal Revenue Service

26 CFR Part 1

[TD 9138]

RIN 1545–BD12

Transitional Rule for Vested Accrued Vacation Pay

AGENCY: Internal Revenue Service (IRS), Treasury.

ACTION: Removal of temporary regulation.

SUMMARY: This document removes a temporary regulation that provides a rule for an election to deduct vested accrued vacation pay for the first taxable year ending after July 18, 1984. The repeal of the underlying code section in 1987 has rendered the temporary regulation obsolete. The removal of this regulation will not affect taxpayers.

DATE: This Treasury decision is effective on July 15, 2004.

FOR FURTHER INFORMATION CONTACT: Jamie J. Kim at (202) 622–4950 (not a toll-free number).

SUPPLEMENTARY INFORMATION:

Background

Prior to repeal in 1987, section 463 of the Internal Revenue Code (Code) permitted taxpayers to elect to deduct reasonable additions to a reserve account for vacation pay, including amounts earned by employees before the close of the taxable year that, because of contingencies, would not be deductible under section 162(a) as an accrued expense. In connection with the enactment of the economic performance rules under section 461(h), section 91(i) of the Tax Reform Act of 1984, Public Law 98–369 (98 Stat. 494, 609), provided a transitional rule under which certain taxpayers could make an election under section 463 for the first taxable year ending after July 18, 1984. On February 4, 1986, the IRS and Treasury published temporary regulation § 1.463–1T (TD 8073) in the **Federal Register** (51 FR 4312), as amended on April 2, 1986, (51 FR 11302), to provide guidance on making the election under section 463 pursuant to the transitional rule. The repeal of section 463 by section 10201(a) of the Revenue Act of 1987, Public Law 100–203 (101 Stat. 1330–382, 1330–387), has rendered temporary regulation § 1.463–1T obsolete.

Special Analyses

It has been determined that the removal of this regulation is not a

significant regulatory action as defined in Executive Order 12866. Therefore, a regulatory assessment is not required. Because this rule merely removes regulatory provisions made obsolete by statute, prior notice and comment and a delayed effective date are unnecessary and contrary to the public interest. 5 U.S.C. 553(b)(B) and (d)(3). Because no notice of proposed rulemaking is required, the Regulatory Flexibility Act (5 U.S.C. chapter 6) does not apply.

Drafting Information

The principal author of this Treasury decision is Jamie J. Kim of the Office of Associate Chief Counsel (Income Tax and Accounting), IRS.

List of Subjects in 26 CFR Part 1

Income taxes, Reporting and recordkeeping requirements.

Removal of Temporary Regulation

■ Accordingly, 26 CFR Part 1 is amended as follows:

PART 1—INCOME TAXES

■ **Paragraph 1.** The authority citation for part 1 continues to read, in part, as follows:

Authority: 26 U.S.C. 7805 * * *

§ 1.463–1T [Removed]

■ **Par. 2.** Section 1.463–1T is removed.

Approved: July 7, 2004.

Mark E. Matthews,

Deputy Commissioner for Services and Enforcement.

Gregory F. Jenner,

Acting Assistant Secretary of the Treasury (Tax Policy).

[FR Doc. 04–16090 Filed 7–15–04; 8:45 am]

BILLING CODE 4830–01–P

ENVIRONMENTAL PROTECTION AGENCY

40 CFR Parts 51 and 52

[AD–FRL–7788–7]

RIN 2060–AK28

Prevention of Significant Deterioration (PSD) and Nonattainment New Source Review (NSR): Routine Maintenance, Repair and Replacement; Reconsideration

AGENCY: Environmental Protection Agency (EPA).

ACTION: Announcement of public hearing.

SUMMARY: The EPA is announcing a public hearing to be held on August 2, 2004, regarding the July 1, 2004 reconsideration notice for regulations governing the NSR programs mandated by parts C and D of title I of the Clean Air Act (CAA). See 69 FR 40278. Being reconsidered are parts of the NSR regulations for routine maintenance, repair and replacement (RMRR) that were promulgated on October 27, 2003. See 68 FR 61249. The public hearing will provide interested parties the opportunity to present data, views, or arguments concerning the July 1, 2004 document.

DATES: The public hearing will convene on August 2, 2004 at 9 a.m. eastern daylight time and will end at 5 p.m. eastern daylight time or when the last registered speaker has had an opportunity to speak.

ADDRESSES: The public hearing will be held at the Sheraton Imperial Hotel, 4700 Emperor Boulevard, Durham, North Carolina 27703; telephone (919) 941–5050.

Docket: Documents related to this rule are available for public inspection in the EPA Docket Center under E-Docket ID No. OAR–2002–0068 (Legacy Docket ID No. A–2002–04). The record for this public hearing will remain open until September 1, 2004, to allow 30 days for submittal of additional information related to the hearing.

FOR FURTHER INFORMATION CONTACT: *Mr. Dave Svendsgaard* at (919) 541–2380, telefax (919) 541–5509, E-mail: *svendsgaard.dave@epa.gov,* or by mail at U.S. Environmental Protection Agency, OAQPS, Information Transfer and Program Integration Division, (C339–03), Research Triangle Park, North Carolina 27711. If you would like to speak at the hearing, you should contact *Ms. Chandra Kennedy*, U.S., Environmental Protection Agency, OAQPS, Information Transfer and Program Integration Division, (C339–03), Research Triangle Park, North Carolina 27711; telephone (919) 541–5319 or E-mail *kennedy.chandra@epa.gov*, by July 19, 2004, to confirm a reservation to speak. We will notify speakers of their assigned times by July 26, 2004. We will continue to accommodate requests to speak that are received after the July 19, 2004, deadline, subject to available time slots. Presentations will be limited to 5 minutes each.

SUPPLEMENTARY INFORMATION: The EPA's planned seating arrangement for the hearing is theater style, with seating available on a first-come, first-served basis for about 250 people. An agenda will be provided at the hearing.

Dated: July 8, 2004.

Gregory A. Green,

Acting Director, Office of Air Quality Planning and Standards.

[FR Doc. 04–16329 Filed 7–15–04; 8:45 am]

BILLING CODE 6560–50–P

ENVIRONMENTAL PROTECTION AGENCY

40 CFR Part 180

[OPP–2004–0120; FRL–7367–1]

Spiroxamine; Pesticide Tolerance

AGENCY: Environmental Protection Agency (EPA).

ACTION: Final rule.

SUMMARY: This regulation establishes tolerances for combined residues of spiroxamine in or on grape, banana, and hop, dried cones. Bayer CropScience and the Interregional Research Project Number 4 (IR-4), respectively, requested these tolerances under the Federal Food, Drug, and Cosmetic Act (FFDCA), as amended by the Food Quality Protection Act of 1996 (FQPA).

DATES: This regulation is effective July 16, 2004. Objections and requests for hearings must be received on or before September 14, 2004.

ADDRESSES: To submit a written objection or hearing request follow the detailed instructions as provided in Unit VIII. of the **SUPPLEMENTARY INFORMATION.** EPA has established a docket for this action under Docket ID number OPP–2004–0120. All documents in the docket are listed in the EDOCKET index at*http://www.epa.gov/edocket.* Although listed in the index, some information is not publicly available, i.e., CBI or other information whose disclosure is restricted by statute. Certain other material, such as copyrighted material, is not placed on the Internet and will be publicly available only in hard copy form. Publicly available docket materials are available either electronically in EDOCKET or in hard copy at the Public Information and Records Integrity Branch (PIRIB), Rm. 119, Crystal Mall #2, 1801 S. St., Arlington, VA. This docket facility is open from 8:30 a.m. to 4 p.m., Monday through Friday, excluding legal holidays. The docket telephone number is (703) 305–5805.

FOR FURTHER INFORMATION CONTACT: Sidney Jackson, Registration Division (7505C), Office of Pesticide Programs, Environmental Protection Agency, 1200 Pennsylvania Ave., NW., Washington, DC 20460–0001; telephone number:

(703) 305–7610; e-mail address:*jackson.sidney@epa.gov*.

SUPPLEMENTARY INFORMATION:

I. General Information

A. Does this Action Apply to Me?

You may be potentially affected by this action if you are an agricultural producer, food manufacturer, or pesticide manufacturer. The North American Industrial Classification System (NAICS) codes have been provided to assist you and others in determining whether this action might apply to certain entities. Potentially affected entities may include, but are not limited to:

- Crop production (NAICS 111), e.g., agricultural workers; greenhouse, nursery, and floriculture workers; farmers.
- Animal production (NAICS 112), e.g., cattle ranchers and farmers, dairy cattle farmers, livestock farmers.
- Food manufacturing (NAICS 311), e.g., agricultural workers; farmers; greenhouse, nursery, and floriculture workers; ranchers; pesticide applicators.
- Pesticide manufacturing (NAICS 32532), e.g., agricultural workers; commercial applicators; farmers; greenhouse, nursery, and floriculture workers; residential users.

This listing is not intended to be exhaustive, but rather provides a guide for readers regarding entities likely to be affected by this action. Other types of entities not listed in this unit could also be affected. If you have any questions regarding the applicability of this action to a particular entity, consult the person listed under **FOR FURTHER INFORMATION CONTACT**.

B. How Can I Access Electronic Copies of this Document and Other Related Information?

In addition to using EDOCKET *(http://www.epa.gov/edocket/)*, you may access this **Federal Register** document electronically through the EPA Internet under the ''**Federal Register**'' listings at *http://www.epa.gov/fedrgstr/*. A frequently updated electronic version of 40 CFR part 180 is available at E-CFR Beta Site Two at *http://www.gpoaccess.gov/ecfr/*.

II. Background and Statutory Findings

In the **Federal Register** of March 7, 2003 (68 FR 11088) (FRL–7290–5), and December 10, 2003 (68 FR 68904) (FRL–7337–6), EPA issued notices pursuant to section 408(d)(3) of FFDCA, 21 U.S.C. 346a(d)(3), announcing the filing of pesticide petitions (PP 0F6122, 3E6538, and 3E6783) by Bayer CropScience, 2 T.W. Alexander Drive, P.O. Box 12014, Research Triangle Park, NC 27709, and (PP 3E6518) by IR-4, 681 U.S. Highway #1 South, North Brunswick, NJ 08902–3390, respectively. These notices included a summary of the petitions prepared by Bayer CropScience, the registrant. There were no comments received in response to the notice of filing.

The petitions requested that 40 CFR part 180 be amended by establishing tolerances for combined residues of the fungicide spiroxamine, 8-(1,1-dimethylethyl)-N-ethyl-N-propyl-1,4-dioxaspiro[4,5]decane-2-methanamine, and its metabolites containing the N-ethyl-N-propyl-1,2-dihydroxy-3-aminopropane moiety (formerly known as the aminodiol moiety), in or on grape at 1.0 parts per million (ppm), and grape, raisin at 1.3 ppm (PP 0F6122); banana at 3.0 ppm (3E6538); hop, dried cones (import) at 50 ppm (3E6783); and hop (United States) at 11 ppm (3E6518). Subsequently, PP 0F6122 has been amended to delete grape, raisin at 1.3 ppm, and PP 3E6518 has been amended to increase the tolerance level for ''hop at 11 ppm'' to ''hop, dried cones at 50 ppm.''

Section 408(b)(2)(A)(i) of FFDCA allows EPA to establish a tolerance (the legal limit for a pesticide chemical residue in or on a food) only if EPA determines that the tolerance is ''safe.'' Section 408(b)(2)(A)(ii) of FFDCA defines ''safe'' to mean that ''there is a reasonable certainty that no harm will result from aggregate exposure to the pesticide chemical residue, including all anticipated dietary exposures and all other exposures for which there is reliable information.'' This includes exposure through drinking water and in residential settings, but does not include occupational exposure. Section 408(b)(2)(C) of FFDCA requires EPA to give special consideration to exposure of infants and children to the pesticide chemical residue in establishing a tolerance and to ''ensure that there is a reasonable certainty that no harm will result to infants and children from aggregate exposure to the pesticide chemical residue. . . .''

EPA performs a number of analyses to determine the risks from aggregate exposure to pesticide residues. For further discussion of the regulatory requirements of section 408 of FFDCA and a complete description of the risk assessment process, see the final rule on Bifenthrin Pesticide Tolerances (62 FR 62961, November 26, 1997) (FRL–5754–7).

III. Aggregate Risk Assessment and Determination of Safety

Consistent with section 408(b)(2)(D) of FFDCA, EPA has reviewed the available scientific data and other relevant information in support of these actions. EPA has sufficient data to assess the hazards of and to make a determination on aggregate exposure, consistent with section 408(b)(2) of FFDCA, for import tolerances for combined residues of spiroxamine on grape at 1.0 ppm, banana at 3.0 ppm, and hop, dried cones at 50 ppm (import and U.S. grown). EPA's assessment of exposures and risks associated with establishing these tolerances follow.

A. Toxicological Profile

EPA has evaluated the available toxicity data and considered its validity, completeness, and reliability as well as the relationship of the results of the studies to human risk. EPA has also considered available information concerning the variability of the sensitivities of major identifiable subgroups of consumers, including infants and children. The nature of the toxic effects caused by spiroxamine is discussed in Table 1 of this unit as well as the no observed adverse effect level (NOAEL) and the lowest observed adverse effect level (LOAEL) from the toxicity studies reviewed.

Subchronic studies show the target organ of spiroxamine toxicity is the liver. Subchronic studies were characterized by slight to mild hepatotoxicity, with associated elevation in liver enzymes. Mucous membranes of the esophagus and forestomach were keratinized and hyperplastic due to the strong irritant properties of spiroxamine. Long-term administration of spiroxamine in the dog resulted in hepatocytomegaly, cataracts, and liver discoloration. In the rat, it resulted in an increased mortality in females, decreased body weights and body weight gains in both sexes, and increased esophageal hyperkeratosis in both sexes, while in the mouse, chronic administration resulted in uterine nodules, hyperplasia in the adrenal gland of males, hyperkeratosis in the esophagus, forestomach, and tongue of females, and acanthosis in the pinnae and tails of females. In rats, developmental effects entailed delayed ossification. Developmental effects were not seen in rabbits. There was no evidence of increased susceptibility of the young animals following exposure to spiroxamine in any developmental toxicity studies in the data base. There was evidence of mild spiroxamine-induced neurotoxicity characterized by

piloerection and slight to moderate gait incoordination, and functional observational battery (FOB) effects of decreased forelimb grip strength and foot splay in males in the acute neurotoxicity study. No neuropathology was seen in either the acute or subchronic toxicity studies in rats and no neurotoxicity was detected in the subchronic study. Spiroxamine has no carcinogenic potential, as indicated in both the rat and the mouse carcinogenicity studies. In addition, spiroxamine has no mutagenicity potential, based on several *in vivo* and *in vitro* studies.

TABLE 1.—SUBCHRONIC, CHRONIC, AND OTHER TOXICITY

Guideline No.	Study Type	Results
870.3100	90–Day oral toxicity--rodents (rats) active ingredient (a.i.)	NOAEL = M: 9.3, F: 13.2 mg/kg/day LOAEL = M: 54.9, F: 75.1 mg/kg/day based on decreased body weights and body weight gains in both sexes, hyperkeratosis and hyperplasia/hypertrophy in the esophagus of both sexes and hyperkeratosis in the forestomach of males. Minimal to marked hyperkeratosis in the tongue of both sexes. Slight multifocal hyperplasia in the urinary bladder of both sexes. Minimal to slight hyaline droplet degeneration in the liver in males.
870.3100	90–Day oral toxicity rodents (rats) Metabolite KWG 4168 N-oxide	NOAEL = M: 8.8, F: 9.7 mg/kg/day LOAEL = M: 45.0, F: 53.6 mg/kg/day based on hyperkeratosis in the esophagus and forestomach
870.3150	90–Day oral toxicity--nonrodents (dogs)	NOAEL = M: 16.19, F: 15.05 mg/kg/day LOAEL = M: 20.02, F: 21.29 mg/kg/day based on decreased albumin in females, increased absolute and relative liver weights in males, and increased diffuse hepatocytomegaly in males
870.3200	21/28–Day dermal toxicity (rabbit)	NOAEL = 0.2 mg/kg/day LOAEL = 0.5 mg/kg/day based on erythema at the application site
870.3465	28–Day inhalation toxicity (rats)	NOAEL = 23.6 mg/kg/day (0.087 mg/L) LOAEL = 140.5 mg/kg/day (0.518 mg/L) based on decreased body weights and body weight gains, increased incidences of clinical signs of toxicity and dermal irritation, thymic atrophy, and toxicity to the skin, respiratory system, and liver
870.3700	Prenatal (oral) developmental-rodents (rats)	*Maternal* NOAEL = 30 mg/kg/day LOAEL = 100 mg/kg/day based on decreased body weights, body weight gains, and food consumption *Developmental* NOAEL = 30 mg/kg/day LOAEL = 100 mg/kg/day based on increased incidence of delayed skeletal development (incomplete ossification) of the os interparietal (fetal and litter incidences) and os parietale (fetal incidences)

TABLE 1.—SUBCHRONIC, CHRONIC, AND OTHER TOXICITY—Continued

Guideline No.	Study Type	Results
870.3700	Prenatal (dermal) developmental--rodents (rats)	*Maternal (Systemic)* NOAEL = 5 mg/kg/day LOAEL = 10 mg/kg/day based on decreased body weight gains *Maternal (Dermal)* NOAEL = less than 5 mg/kg/day LOAEL (Dermal) = 5 mg/kg/day based on very slight erythema and/or slight scaling of skin *Developmental* NOAEL = 20 mg/kg/day LOAEL = 80 mg/kg/day based on the increased fetal and litter incidence of incomplete/non-ossification of the os occipital and the increased non-ossification of the left distal phalanx of digit number 4 of the forelimb
870.3700	Prenatal developmental in nonrodents (rabbits)	*Maternal* NOAEL = 20 mg/kg/day LOAEL = 80 mg/kg/day based on mortality, clinical signs of toxicity (encrusted mouth, anal prolapse, and little/soft feces), decreased body weight gains, and decreased food consumption *Developmental* NOAEL = 80 mg/kg/day LOAEL: Not Achieved
870.3800	Reproduction and fertility effects (rats)	*Parental/Systemic* NOAEL = M: 2.5, F: 2.7 mg/kg/day LOAEL = M: 10.8, F: 11.9 mg/kg/day based on decreased food consumption during lactation and on increased incidences of esophageal hyperkeratosis in females *Reproductive* NOAEL = M: 44.8, F: 48.8 mg/kg/day LOAEL = Not achieved *Offspring* NOAEL = M: 10.8, F: 11.9 mg/kg/day LOAEL = M: 44.8, F: 48.8 mg/kg/day based on decreased litter size and pup weight and increased clinical signs of toxicity in the F1 generation
870.4100	Chronic toxicity--dogs	NOAEL = M: 2.47, F: 2.48 mg/kg/day LOAEL = M: 28.03, F: 25.84 mg/kg/day based on hepato/cytomegaly, cataracts, and decreased albumin in males and females; liver discoloration and decreased triglycerides in females; and increased alanine aminotransferase in males
870.4200	Carcinogenicity--rats	NOAEL = M: 4.22, F: 5.67 mg/kg/day LOAEL = M: 32.81, F: 43.04 mg/kg/day based on increased mortality in females, decreased body weights and body weight gains in both sexes, and increased esophageal lesions in both sexes No evidence of carcinogenicity
870.4300	Carcinogenicity--mice	NOAEL = M: 41.0, F: 64.6 mg/kg/day LOAEL = M: 149.8, F: 248.1 mg/kg/day based on uterine nodules, hyperplasia in the adrenal gland of males, hyperkeratosis in the esophagus, forestomach, and tongue of females, and acanthosis in the pinnae and tails of females No evidence of carcinogenicity
870.5100	Gene mutation (Ames Test)	Negative, ±S9 up to cytotoxic 1,000 μg/plate

TABLE 1.—SUBCHRONIC, CHRONIC, AND OTHER TOXICITY—Continued

Guideline No.	Study Type	Results
870.5395	Cytogenetics	Negative, at clinically toxic i.p. dose
870.5300	Mammalian cells in culture	Negative, ±S9 up to cytotoxic/precipitation 200 µg/mL
870.5375	Chromosome aberrations	Negative, ±S9 up to cytotoxic doses
870.5550	Unscheduled DNA synthesis	Negative, ±S9 up to severe cytotoxicity
870.6200	Acute neurotoxicity screening battery	NOAEL = 10 mg/kg LOAEL = 30 mg/kg based on clinical signs (piloerection and slight to moderate gait incoordination) and FOB effects (decreased forelimb grip strength and foot splay) in males
870.6200	Subchronic neurotoxicity screening battery	NOAEL = M: 2.4, F: 2.5 mg/kg/day LOAEL = M: 10.6, F: 11.1 mg/kg/day based on decreased bodyweight gain, food consumption (males), and hyperkeratosis in the stomach, esophagus, and tongue
870.7485	Metabolism and pharmacokinetics (rats)	Absorption was at least 60–70% and began immediately after administration with peak plasma concentrations at 1.5–2 hours post-dose at 1 mg/kg, and delayed to 8 hours at 100 mg/kg. More than 97% of the recovered radioactivity was excreted via urine and feces within 48 hours in all dose groups and more than 80% within 24 hours. Renal excretion accounted for the majority of the radioactivity (1.8:1 urine:feces on average).
870.7600	Dermal penetration (rats)	Dermal absorption factor: 52.5% at 8 hours

B. Toxicological Endpoints

The dose at which no adverse effects are observed (the NOAEL) from the toxicology study identified as appropriate for use in risk assessment is used to estimate the toxicological level of concern (LOC). However, the lowest dose at which adverse effects of concern are identified (the LOAEL) is sometimes used for risk assessment if no NOAEL was achieved in the toxicology study selected. An uncertainty factor (UF) is applied to reflect uncertainties inherent in the extrapolation from laboratory animal data to humans and in the variations in sensitivity among members of the human population as well as other unknowns. An UF of 100 is routinely used, 10X to account for interspecies differences and 10X for intraspecies differences.

Three other types of safety or uncertainty factors may be used: ''Traditional uncertainty factors''; the ''special FQPA safety factor;'' and the ''default FQPA safety factor.'' By the term ''traditional uncertainty factor,'' EPA is referring to those additional uncertainty factors used prior to FQPA passage to account for data base deficiencies. These traditional uncertainty factors have been incorporated by the FQPA into the additional safety factor for the protection of infants and children. The term ''special FQPA safety factor'' refers to those safety factors that are deemed necessary for the protection of infants and children primarily as a result of the FQPA. The ''default FQPA safety factor'' is the additional 10X safety factor that is mandated by the statute unless it is decided that there are reliable data to choose a different additional factor (potentially a traditional uncertainty factor or a special FQPA safety factor).

For dietary risk assessment (other than cancer) the Agency uses the UF to calculate an acute or chronic reference dose (acute RfD or chronic RfD) where the RfD is equal to the NOAEL divided by an UF of 100 to account for interspecies and intraspecies differences and any traditional uncertainty factors deemed appropriate (RfD = NOAEL/UF). Where a special FQPA safety factor or the default FQPA safety factor is used, this additional factor is applied to the RfD by dividing the RfD by such additional factor. The acute or chronic Population Adjusted Dose (aPAD or cPAD) is a modification of the RfD to accommodate this type of safety factor.

For non-dietary risk assessments (other than cancer) the UF is used to determine the LOC. For example, when 100 is the appropriate UF (10X to account for interspecies differences and 10X for intraspecies differences) the LOC is 100. To estimate risk, a ratio of the NOAEL to exposures (margin of exposure (MOE) = NOAEL/exposure) is calculated and compared to the LOC.

The linear default risk methodology (Q*) is the primary method currently used by the Agency to quantify carcinogenic risk. The Q* approach assumes that any amount of exposure will lead to some degree of cancer risk. A Q* is calculated and used to estimate risk which represents a probability of occurrence of additional cancer cases (e.g., risk). An example of how such a probability risk is expressed would be to describe the risk as one in one hundred thousand (1×10^{-5}), one in a million(1×10^{-6}), or one in ten million(1×10^{-7}). Under certain specific circumstances, MOE calculations will be used for the carcinogenic risk assessment. In this non-linear approach, a ''point of departure'' is identified below which

carcinogenic effects are not expected. The point of departure is typically a NOAEL based on an endpoint related to cancer effects though it may be a different value derived from the dose response curve. To estimate risk, a ratio of the point of departure to exposure (MOE_{cancer} = point of departure/exposures) is calculated.

TABLE 2.—SUMMARY OF TOXICOLOGICAL DOSE AND ENDPOINTS FOR SPIROXAMINE FOR USE IN HUMAN RISK ASSESSMENT

Exposure/Scenario	Dose Used in Risk Assessment, Interspecies and Intraspecies and any Traditional UF	Special FQPA SF and Level of Concern for Risk Assessment	Study and Toxicological Effects
Acute dietary (general population including infants and children)	NOAEL = 10 mg/kg/day UF = 100 Acute RfD = 0.1 mg/kg/day	Special FQPA SF = 1X aPAD = acute RfD/Special FQPA SF = 0.1 mg/kg/day.	Acute neurotoxicity in rats LOAEL = 30 mg/kg/day based on clinical signs (piloerection and slight to moderate gait incoordination) and FOB effects (decreased forelimb grip strength and foot splay) in males on day 0-1
Chronic dietary (all populations)	NOAEL = 2.5 mg/kg/day UF = 300 Chronic RfD = 0.0083 mg/kg/day	Special FQPA SF = 1X cPAD = chronic RfD/Special FQPA SF = 0.0083 mg/kg/day	Chronic oral toxicity study in dogs LOAEL = 28.03/25.84 mg/kg/day M/F based on hepatocytomegaly, cataracts, and decreased albumin in males and females; liver discoloration and decreased triglycerides in females; and increased alanine aminotransferase in males
Dermal exposure: Short- and intermediate-term (Residential)	Dermal (or oral) study NOAEL= 5 mg/kg/day	Residential LOC for MOE = N/A	Prenatal toxicity study in rats (Dermal) the maternal LOAEL (systemic) = 20 mg/kg/day based on decreased body weight gains
Dermal exposure: Long-term (Residential)	Oral study NOAEL = 2.5 mg/kg/day (dermal absorption rate = 53%)	Residential LOC for MOE = N/A	Chronic oral toxicity in dogs LOAEL = 28.03/25.84 mg/kg/day (M/F) based on hepatocytomegaly, cataracts, and decreased albumin in males and females; liver discoloration and decreased triglycerides in females; and increased alanine aminotransferase in males
Short-term inhalation (1 to 30 days) (Residential)	Inhalation study NOAEL = 0.087 mg/L = 23.6 mg/kg/day	Residential LOC for MOE = N/A	28–Day inhalation toxicity study in rats LOAEL = 0.518 mg/L = 140.5 mg/kg/day based on decreased body weights and body weight gains, increased incidences of clinical signs of toxicity and dermal irritation, thymic atrophy, and toxicity to the skin, respiratory system, and liver
Intermediate-term inhalation (1–6 months) (Residential)	Inhalation NOAEL = 0.087 mg/L = 23.6 mg/kg/day	Residential LOC for MOE = N/A	Subchronic inhalation toxicity study in rats LOAEL = 0.518 mg/L = 140.5 mg/kg/day based on decreased body weights and body weight gains, increased incidences of clinical signs of toxicity and dermal irritation, thymic atrophy, and toxicity to the skin, respiratory system, and liver

TABLE 2.—SUMMARY OF TOXICOLOGICAL DOSE AND ENDPOINTS FOR SPIROXAMINE FOR USE IN HUMAN RISK ASSESSMENT—Continued

Exposure/Scenario	Dose Used in Risk Assessment, Interspecies and Intraspecies and any Traditional UF	Special FQPA SF and Level of Concern for Risk Assessment	Study and Toxicological Effects
Long-term inhalation (greater than 6 months) (Residential)	Oral study NOAEL = 2.5 mg/kg/day (inhalation absorption rate = 100%)	Residential LOC for MOE = N/A	Chronic oral toxicity study in dogs LOAEL = 28.03/25.84 mg/kg/day M/F based on hepatocytomegaly, cataracts, and decreased albumin in males and females; liver discoloration and decreased triglycerides in females; and increased alanine aminotransferase in males

C. Exposure Assessment

1. *Dietary exposure from food and feed uses.* Spiroxamine is a new chemical and therefore, these are the first tolerances to be established for the residues of spiroxamine. Tolerance level residues, average residues from field trial data, the concentration/reduction factors from processing studies, and 100% crop treated information were used. Partially refined acute and chronic dietary risk assessments for spiroxamine were conducted using the Dietary Exposure Evaluation Model (DEEM-FCID, Version 1.33), which uses food consumption data from the U.S. Department of Agriculture (USDA) Continuing Surveys of Food Intakes by Individuals (CSFII) from 1994–1996 and 1998. Risk assessments were conducted by EPA to assess dietary exposures from spiroxamine in food as follows:

i. *Acute exposure.* The acute assessment was a partially refined deterministic assessment. Tolerances were used for the nonblended and partially blended raw agricultural commodities (3.0 ppm for bananas and 1.0 ppm for grapes). For the processed commodities of grapes, the highest average field trial (HAFT) value of 0.613 ppm was used as the residue value, which was computer-multiplied by the processing factors (adjustment factors #1) of 0.67x for grape juice and 1.3x for raisins. For the blended commodity hops, the average residue value from the field trials for imported hops (16 ppm) was used. Data on projected market share or percent crop treated were not used.

ii. *Chronic exposure.* The chronic assessment was a partially refined deterministic assessment. Average residue values from the field trials were used for bananas, grapes, and hops (1.13 ppm for unbagged bananas, 0.17 ppm for grapes, and 16 ppm for imported hops.) The tolerance level for grapes (1.0 ppm) was used for grape leaves and wine. For the processed commodities of grapes other than wine, the average value of 0.17 ppm was used as the residue value, which was computer-multiplied by the processing factors (adjustment factors #1) of 0.67x for grape juice and 1.3x for raisins. Data on projected market share or percent crop treated were not used.

iii. *Cancer.* Spiroxamine has been classified as not likely to be carcinogenic to humans. Therefore, a quantitative risk assessment was not conducted to assess cancer risk.

2. *Dietary exposure from drinking water.* The Agency lacks sufficient monitoring exposure data to complete a comprehensive dietary exposure analysis and risk assessment for spiroxamine in drinking water. Because the Agency does not have comprehensive monitoring data, drinking water concentration estimates are made by reliance on simulation or modeling taking into account data on the physical characteristics of spiroxamine.

The Agency uses the FQPA Index Reservoir Screening Tool (FIRST) or the Pesticide Root Zone Model/Exposure Analysis Modeling System (PRZM/EXAMS), to produce estimates of pesticide concentrations in an index reservoir. The Screening Concentration in Groundwater (SCI-GROW) model is used to predict pesticide concentrations in shallow ground water. For a screening-level assessment for surface water EPA will use FIRST (a Tier 1 model) before using PRZM/EXAMS (a Tier 2 model). The FIRST model is a subset of the PRZM/EXAMS model that uses a specific high-end runoff scenario for pesticides. Both FIRST and PRZM/EXAMS incorporate an index reservoir environment, and both models include a percent crop area factor as an adjustment to account for the maximum percent crop coverage within a watershed or drainage basin.

None of these models include consideration of the impact processing (mixing, dilution, or treatment) of raw water for distribution as drinking water would likely have on the removal of pesticides from the source water. The primary use of these models by the Agency at this stage is to provide a screen for sorting out pesticides for which it is unlikely that drinking water concentrations would exceed human health levels of concern.

Since the models used are considered to be screening tools in the risk assessment process, the Agency does not use estimated environmental concentrations (EECs), which are the model estimates of a pesticide's concentration in water. EECs derived from these models are used to quantify drinking water exposure and risk as a %RfD or %PAD. Instead drinking water levels of comparison (DWLOC) are calculated and used as a point of comparison against the model estimates of a pesticide's concentration in water. DWLOCs are theoretical upper limits on a pesticide's concentration in drinking water in light of total aggregate exposure to a pesticide in food, and from residential uses. Since DWLOCs address total aggregate exposure to spiroxamine they are further discussed in the aggregate risk section.

Based on the PRZM/EXAMS and SCI-GROW models, the EECs of spiroxamine for acute and chronic exposures are estimated to be 17.8 parts per billion (ppb), and 14 ppb, respectively for surface water. The EEC of spiroxamine for acute and chronic exposures is 0.27 ppb for ground water.

3. *From non-dietary exposure.* The term ''residential exposure'' is used in this document to refer to non-occupational, non-dietary exposure (e.g., for lawn and garden pest control,

indoor pest control, termiticides, and flea and tick control on pets).

Spiroxamine is not registered for use on any sites that would result in residential exposure.

4. *Cumulative effects from substances with a common mechanism of toxicity.* Section 408(b)(2)(D)(v) of FFDCA requires that, when considering whether to establish, modify, or revoke a tolerance, the Agency consider ''available information'' concerning the cumulative effects of a particular pesticide's residues and ''other substances that have a common mechanism of toxicity.''

Unlike other pesticides for which EPA has followed a cumulative risk approach based on a common mechanism of toxicity, EPA has not made a common mechanism of toxicity finding as to spiroxamine and any other substances and spiroxamine does not appear to produce a toxic metabolite produced by other substances. For the purposes of this tolerance action, therefore, EPA has not assumed that spiroxamine has a common mechanism of toxicity with other substances. For information regarding EPA's efforts to determine which chemicals have a common mechanism of toxicity and to evaluate the cumulative effects of such chemicals, see the policy statements released by EPA's Office of Pesticide Programs (OPP) concerning common mechanism determinations and procedures for cumulating effects from substances found to have a common mechanism on EPA's web site at *http://www.epa.gov/pesticides/cumulative/*.

D. Safety Factor for Infants and Children

1. *In general.* Section 408 of FFDCA provides that EPA shall apply an additional tenfold margin of safety for infants and children in the case of threshold effects to account for prenatal and postnatal toxicity and the completeness of the data base on toxicity and exposure unless EPA determines based on reliable data that a different margin of safety will be safe for infants and children. Margins of safety are incorporated into EPA risk assessments either directly through use of a MOE analysis or through using uncertainty (safety) factors in calculating a dose level that poses no appreciable risk to humans. In applying this provision, EPA either retains the default value of 10X when reliable data do not support the choice of a different factor, or, if reliable data are available, EPA uses a different additional safety factor value based on the use of traditional uncertainty factors and/or special FQPA safety factors, as appropriate.

2. *Prenatal and postnatal sensitivity.* There was no evidence for quantitative or qualitative susceptibility following oral or dermal exposures to rats *in utero* or oral exposure to rabbits *in utero*.

There is no concern for neurotoxicity resulting from exposure to spiroxamine.

3. *Conclusion.* The toxicology and exposure data bases for spiroxamine are complete with the exception of certain confirmatory or clarifying studies. The toxicity data base contains acceptable/guideline acute and subchronic neurotoxicity studies; two acceptable/guideline developmental toxicity studies in rats (oral and dermal), and rabbits (oral); and an acceptable/nonguideline 2-generation rat reproduction study. The 2-generation rat reproduction study is classified as acceptable/nonguideline because of questions concerning the increased lactation indices and clinical signs of toxicity in the second generation. There are enough data to satisfy the requirements for a 1-generation reproduction study and the study is acceptable and potentially upgradable to an Acceptable/Guideline study (2-generation reproduction) upon submission of clarifying data regarding the lactation indices and clinical signs of toxicity in the second generation.

In the acute neurotoxicity study in the rat, there was evidence of mild spiroxamine-induced neurotoxicity characterized by piloerection and slight to moderate gait in coordination, and FOB effects of decreased forelimb grip strength and foot splay in males at a dose level of 30 mg/kg/day. In subchronic neurotoxicity studies in the rat, clinical signs, FOB, motor activity, brain weight, ophthalmology, gross necropsy, and neuropathology were unaffected by treatment. Treatment-related effects at 155 ppm (10.6 mg/kg/day) were limited to hyperkeratosis of the esophagus in one male and one female. No treatment-related effects were observed at 35 ppm (2.4 mg/kg/day).

In rat prenatal toxicity studies - oral, developmental toxicity showed no effects of treatment on maternal survival or clinical signs. There were no abortions, premature deliveries, or complete litter resorptions. Similarly, there were no effects of treatment on the number of resorptions (early or late), number of fetuses (live or dead), post-implantation loss, or fetal sex ratio. There were no treatment-related external, visceral, or skeletal variations.

Rat prenatal toxicity studies - dermal, showed there were no effects of treatment on maternal survival, clinical signs, food consumption, or gross pathologly.

In rabbit prenatal toxicity study, there were no effects of treatment on maternal gross pathology or the number of resorptions (early, late, or complete litter), number of fetuses (live or dead), number of litters, post-implantation loss, fetal weights, or sex ratio. There were no treatment-related external or skeletal variations.

4. *Degree of concern analysis and residual uncertainties.* There are no concerns for residual uncertainty for prenatal toxicity in the available developmental studies. However, until clarifying data are provided on the 2-generation rat reproduction study, there is some uncertainty with regard to postnatal toxicity.

A 3X (as opposed to 10X) FQPA data base uncertainty factor was determined to be sufficient to address questions regarding the 2-generation rat reproduction study because the available data from the 1-generation show offspring effects occurring at doses higher than the dose that caused parental effects and the dose (2.5 mg/kg/day) used for driving the chronic RfD is approximately 3-fold lower than the offspring NOAEL (10.8 mg/kg/day). The 3X data base UF should be applied only to the chronic dietary risk assessment because the required study (2-generation reproduction toxicity study) could provide an endpoint applicable to chronic exposure scenario, but not for an acute exposure scenario. There are no residential uses at the present time.

Based on the above data, no special FQPA safety factor (i.e., 1X) is required since there are no residual uncertainties for prenatal toxicity and the lack of a fully acceptable 2-generation toxicity study is addressed by the data base uncertainty factor of 3X.

E. Aggregate Risks and Determination of Safety

To estimate total aggregate exposure to a pesticide from food, drinking water, and residential uses, the Agency calculates DWLOCs which are used as a point of comparison against EECs. DWLOC values are not regulatory standards for drinking water. DWLOCs are theoretical upper limits on a pesticide's concentration in drinking water in light of total aggregate exposure to a pesticide in food and residential uses. In calculating a DWLOC, the Agency determines how much of the acceptable exposure (i.e., the PAD) is available for exposure through drinking water (e.g., allowable chronic water exposure (mg/kg/day) = cPAD - (average food + residential exposure). This

allowable exposure through drinking water is used to calculate a DWLOC.

A DWLOC will vary depending on the toxic endpoint, drinking water consumption, and body weights. Default body weights and consumption values as used by the EPA's Office of Water are used to calculate DWLOCs: 2 liter (L)/70 kg (adult male), 2L/60 kg (adult female), and 1L/10 kg (child). Default body weights and drinking water consumption values vary on an individual basis. This variation will be taken into account in more refined screening-level and quantitative drinking water exposure assessments. Different populations will have different DWLOCs. Generally, a DWLOC is calculated for each type of risk assessment used: Acute, short-term, intermediate-term, chronic, and cancer.

When EECs for surface water and ground water are less than the calculated DWLOCs, EPA concludes with reasonable certainty that exposures to the pesticide in drinking water (when considered along with other sources of exposure for which EPA has reliable data) would not result in unacceptable levels of aggregate human health risk at this time. Because EPA considers the aggregate risk resulting from multiple exposure pathways associated with a pesticide's uses, levels of comparison in drinking water may vary as those uses change. If new uses are added in the future, EPA will reassess the potential impacts of residues of the pesticide in drinking water as a part of the aggregate risk assessment process.

1. *Acute risk*. Using the exposure assumptions discussed in this unit for acute exposure, the acute dietary exposure from food to spiroxamine will occupy 7.4% of the aPAD for the U.S. population, 6.2% of the aPAD for females 13 years and older, 27% of the aPAD for infants less than 1 year old, and 31% of the aPAD for children 1–2 years old. In addition, there is potential for acute dietary exposure to spiroxamine in drinking water. After calculating DWLOCs and comparing them to the EECs for surface water and ground water, EPA does not expect the aggregate exposure to exceed 100% of the aPAD, as shown in Table 3 of this unit:

TABLE 3.—AGGREGATE RISK ASSESSMENT FOR ACUTE EXPOSURE TO SPIROXAMINE

Population Subgroup	aPAD (mg/kg)	%aPAD/(Food)	Surface Water EEC/(ppb)	Ground Water EEC/(ppb)	Acute DWLOC/(ppb)
U.S. population	0.1	7.4	18	0.27	3,200
Females (13–50 years old)	0.1	6.2	18	0.27	2,800
Infants (less than 1 year old)	0.1	27	18	0.27	730
Children (1–2 years old)	0.1	31	18	0.27	690

2. *Chronic risk*. Using the exposure assumptions described in this unit for chronic exposure, EPA has concluded that exposure to spiroxamine from food will utilize 8.3% of the cPAD for the U.S. population, 6.0% of the aPAD for females 13 years and older, 18% of the cPAD for infants less than 1 year old, and 29% of the cPAD for children 1–2 years old. There are no residential uses for spiroxamine that result in chronic residential exposure to spiroxamine. In addition, there is potential for chronic dietary exposure to spiroxamine in drinking water. After calculating DWLOCs and comparing them to the EECs for surface water and ground water, EPA does not expect the aggregate exposure to exceed 100% of the cPAD, as shown in Table 4 of this unit:

TABLE 4.– AGGREGATE RISK ASSESSMENT FOR CHRONIC (NON-CANCER) EXPOSURE TO SPIROXAMINE

Population/Subgroup	cPAD/mg/kg/day	%/cPAD/(Food)	Surface Water EEC/(ppb)	Ground/Water EEC/(ppb)	Chronic/DWLOC(ppb)
U.S. population	0.0083	8.3	14	0.27	270
Females (13–50 years old)	0.0083	6.0	14	0.27	230
Infants (less than 1 year old)	0.0083	18	14	0.27	70
Children (1–2 years old)	0.0083	29	14	0.27	60

3. *Aggregate cancer risk for U.S. population*. Spiroxamine has been classified as not likely to be carcinogenic to humans. Therefore, spiroxamine is not expected to pose a cancer risk.

4. *Determination of safety*. Based on these risk assessments, EPA concludes that there is a reasonable certainty that no harm will result to the general population, and to infants and children from aggregate exposure to spiroxamine residues.

IV. Other Considerations

A. Analytical Enforcement Methodology

A proposed enforcement method (Bayer AG Method No. 00407) for analysis of spiroxamine and its metabolites containing the aminodiol moiety in plants has been submitted. The method was written for grapes and processed commodities. An independent laboratory validation (ILV) was conducted on grapes. Minor modifications were made for analysis of bananas and hops. The method will be adequate for establishment of tolerances and conditional registrations when the confirmatory method is modified to use more than single-ion monitoring or an interference study is conducted, and when the analytical reference standard for N-ethyl-N-propyl-1,2-dihydroxy-3-

aminopropane is sent to the National Pesticide Standards Repository. As a condition of registration (for continued registration) and for continuation of importation of bananas and hops, a method validation for Bayer AG Method No. 00407 must be conducted by EPA's laboratory, however, EPA has conducted a paper review of this method and found the method acceptable.

Using the common moiety method (Bayer AG Method No. 00407), spiroxamine residues are converted to a single analyte, N-ethyl-N-propyl-1,2-dihydroxy-3-aminopropane (also known as aminodiol), which is derivatized to and measured as the di-trimethylsilyl derivative. All spiroxamine residues containing the aminodiol moiety are quantitated by gas chromatography/mass selective detector (GC/MSD) operated in a single-ion mode. The data collection method used for the quantitation of residues in grape commodities from the field trial, processing, and storage stability studies is identical to the proposed enforcement method. Minor modifications were made for analysis of bananas and hops.

Adequate enforcement methodology (gas chromotography/mass selective detection), Bayer AG Method No. 00407, is available to enforce the tolerance expression. The method may be requested from: Chief, Analytical Chemistry Branch, Environmental Science Center, 701 Mapes Rd., Ft. Meade, MD 20755–5350; telephone number: (410) 305–2905; e-mail address:*residuemethods@epa.gov*.

B. International Residue Limits

There are currently no Codex, Canadian, or Mexican maximum residue levels or tolerances for spiroxamine. A proposal for registration of spiroxamine on hops in the European Community (Germany) with a maximum residue level of 50.0 ppm is consistent with the proposal for U.S. registration of spiroxamine on hops with a tolerance of 50.0 ppm. The U.S. tolerance of 50.0 ppm was proposed to harmonize with the European Community's proposed maximum residue level. International harmonization is not an issue at this time.

C. Conditions

Additional data are needed in the following areas:

- Banana--Storage stability data are needed on bananas stored frozen for 6 months. Information regarding soil types and temperature recordings for the banana field trials should be submitted if available.
- Hops, dried cones--Additional storage stability information is needed to support the hop field trials which were conducted in Germany.
- Clarifying data on the 2-generation reproduction study for rat pertaining to the increased lactation indices and clinical toxicity in the second generation.

V. Conclusion

Therefore, import tolerances are established for combined residues of spiroxamine, 8-(1,1-dimethylethyl)-N-ethyl-N-propyl-1,4-dioxaspiro[4,5]decane-2-methanamine and its metabolites containing the N-ethyl-N-propyl-1,2-dihydroxy-3-aminopropane moiety, in or on grape at 1.0 ppm, banana at 3.0 ppm, and hop, dried cones at 50 ppm (import and U.S. grown).

VI. Objections and Hearing Requests

Under section 408(g) of FFDCA, as amended by FQPA, any person may file an objection to any aspect of this regulation and may also request a hearing on those objections. The EPA procedural regulations which govern the submission of objections and requests for hearings appear in 40 CFR part 178. Although the procedures in those regulations require some modification to reflect the amendments made to FFDCA by FQPA, EPA will continue to use those procedures, with appropriate adjustments, until the necessary modifications can be made. The new section 408(g) of FFDCA provides essentially the same process for persons to ''object'' to a regulation for an exemption from the requirement of a tolerance issued by EPA under new section 408(d) of FFDCA, as was provided in the old sections 408 and 409 of FFDCA. However, the period for filing objections is now 60 days, rather than 30 days.

A. What Do I Need to Do to File an Objection or Request a Hearing?

You must file your objection or request a hearing on this regulation in accordance with the instructions provided in this unit and in 40 CFR part 178. To ensure proper receipt by EPA, you must identify docket ID number OPP–2004–0120 in the subject line on the first page of your submission. All requests must be in writing, and must be mailed or delivered to the Hearing Clerk on or before September 14, 2004.

1. *Filing the request.* Your objection must specify the specific provisions in the regulation that you object to, and the grounds for the objections (40 CFR 178.25). If a hearing is requested, the objections must include a statement of the factual issues(s) on which a hearing is requested, the requestor's contentions on such issues, and a summary of any evidence relied upon by the objector (40 CFR 178.27). Information submitted in connection with an objection or hearing request may be claimed confidential by marking any part or all of that information as CBI. Information so marked will not be disclosed except in accordance with procedures set forth in 40 CFR part 2. A copy of the information that does not contain CBI must be submitted for inclusion in the public record. Information not marked confidential may be disclosed publicly by EPA without prior notice.

Mail your written request to: Office of the Hearing Clerk (1900C), Environmental Protection Agency, 1200 Pennsylvania Ave., NW., Washington, DC 20460–0001. You may also deliver your request to the Office of the Hearing Clerk in Rm. 104, Crystal Mall #2, 1801 S. Bell St., Arlington, VA. The Office of the Hearing Clerk is open from 8 a.m. to 4 p.m., Monday through Friday, excluding legal holidays. The telephone number for the Office of the Hearing Clerk is (703) 603–0061.

2. *Tolerance fee payment.* If you file an objection or request a hearing, you must also pay the fee prescribed by 40 CFR 180.33(i) or request a waiver of that fee pursuant to 40 CFR 180.33(m). You must mail the fee to: EPA Headquarters Accounting Operations Branch, Office of Pesticide Programs, P.O. Box 360277M, Pittsburgh, PA 15251. Please identify the fee submission by labeling it ''Tolerance Petition Fees.''

EPA is authorized to waive any fee requirement ''when in the judgement of the Administrator such a waiver or refund is equitable and not contrary to the purpose of this subsection.'' For additional information regarding the waiver of these fees, you may contact James Tompkins by phone at (703) 305–5697, by e-mail at *tompkins.jim@epa.gov*, or by mailing a request for information to Mr. Tompkins at Registration Division (7505C), Office of Pesticide Programs, Environmental Protection Agency, 1200 Pennsylvania Ave., NW., Washington, DC 20460–0001.

If you would like to request a waiver of the tolerance objection fees, you must mail your request for such a waiver to: James Hollins, Information Resources and Services Division (7502C), Office of Pesticide Programs, Environmental Protection Agency, 1200 Pennsylvania Ave., NW., Washington, DC 20460–0001.

3. *Copies for the Docket.* In addition to filing an objection or hearing request with the Hearing Clerk as described in Unit VI.A., you should also send a copy of your request to the PIRIB for its

inclusion in the official record that is described in Unit I.B.1. Mail your copies, identified by docket ID number OPP–2004–0120, to: Public Information and Records Integrity Branch, Information Resources and Services Division (7502C), Office of Pesticide Programs, Environmental Protection Agency, 1200 Pennsylvania Ave., NW., Washington, DC 20460–0001. In person or by courier, bring a copy to the location of the PIRIB described in Unit I.B.1. You may also send an electronic copy of your request via e-mail to:*opp-docket@epa.gov*. Please use an ASCII file format and avoid the use of special characters and any form of encryption. Copies of electronic objections and hearing requests will also be accepted on disks in WordPerfect 6.1/8.0 or ASCII file format. Do not include any CBI in your electronic copy. You may also submit an electronic copy of your request at many Federal Depository Libraries.

B. When Will the Agency Grant a Request for a Hearing?

A request for a hearing will be granted if the Administrator determines that the material submitted shows the following: There is a genuine and substantial issue of fact; there is a reasonable possibility that available evidence identified by the requestor would, if established resolve one or more of such issues in favor of the requestor, taking into account uncontested claims or facts to the contrary; and resolution of the factual issues(s) in the manner sought by the requestor would be adequate to justify the action requested (40 CFR 178.32).

VII. Statutory and Executive Order Reviews

This final rule establishes a tolerance under section 408(d) of FFDCA in response to a petition submitted to the Agency. The Office of Management and Budget (OMB) has exempted these types of actions from review under Executive Order 12866, entitled *Regulatory Planning and Review* (58 FR 51735, October 4, 1993). Because this rule has been exempted from review under Executive Order 12866 due to its lack of significance, this rule is not subject to Executive Order 13211, *Actions Concerning Regulations That Significantly Affect Energy Supply, Distribution, or Use* (66 FR 28355, May 22, 2001). This final rule does not contain any information collections subject to OMB approval under the Paperwork Reduction Act (PRA), 44 U.S.C. 3501 *et seq.*, or impose any enforceable duty or contain any unfunded mandate as described under Title II of the Unfunded Mandates Reform Act of 1995 (UMRA) (Public Law 104–4). Nor does it require any special considerations under Executive Order 12898, entitled *Federal Actions to Address Environmental Justice in Minority Populations and Low-Income Populations* (59 FR 7629, February 16, 1994); or OMB review or any Agency action under Executive Order 13045, entitled *Protection of Children from Environmental Health Risks and Safety Risks* (62 FR 19885, April 23, 1997). This action does not involve any technical standards that would require Agency consideration of voluntary consensus standards pursuant to section 12(d) of the National Technology Transfer and Advancement Act of 1995 (NTTAA), Public Law 104–113, section 12(d) (15 U.S.C. 272 note). Since tolerances and exemptions that are established on the basis of a petition under section 408(d) of FFDCA, such as the tolerance in this final rule, do not require the issuance of a proposed rule, the requirements of the Regulatory Flexibility Act (RFA) (5 U.S.C. 601 *et seq.*) do not apply. In addition, the Agency has determined that this action will not have a substantial direct effect on States, on the relationship between the national government and the States, or on the distribution of power and responsibilities among the various levels of government, as specified in Executive Order 13132, entitled *Federalism* (64 FR 43255, August 10, 1999). Executive Order 13132 requires EPA to develop an accountable process to ensure ''meaningful and timely input by State and local officials in the development of regulatory policies that have federalism implications.'' ''Policies that have federalism implications'' is defined in the Executive Order to include regulations that have ''substantial direct effects on the States, on the relationship between the national government and the States, or on the distribution of power and responsibilities among the various levels of government.'' This final rule directly regulates growers, food processors, food handlers and food retailers, not States. This action does not alter the relationships or distribution of power and responsibilities established by Congress in the preemption provisions of section 408(n)(4) of FFDCA. For these same reasons, the Agency has determined that this rule does not have any ''tribal implications '' as described in Executive Order 13175, entitled *Consultation and Coordination with Indian Tribal Governments* (65 FR 67249, November 6, 2000). Executive Order 13175, requires EPA to develop an accountable process to ensure ''meaningful and timely input by tribal officials in the development of regulatory policies that have tribal implications.'' ''Policies that have tribal implications'' is defined in the Executive Order to include regulations that have ''substantial direct effects on one or more Indian tribes, on the relationship between the Federal Government and the Indian tribes, or on the distribution of power and responsibilities between the Federal Government and Indian tribes.'' This rule will not have substantial direct effects on tribal governments, on the relationship between the Federal Government and Indian tribes, or on the distribution of power and responsibilities between the Federal Government and Indian tribes, as specified in Executive Order 13175. Thus, Executive Order 13175 does not apply to this rule.

VIII. Congressional Review Act

The Congressional Review Act, 5 U.S.C. 801 *et seq.*, as added by the Small Business Regulatory Enforcement Fairness Act of 1996, generally provides that before a rule may take effect, the agency promulgating the rule must submit a rule report, which includes a copy of the rule, to each House of the Congress and to the Comptroller General of the United States. EPA will submit a report containing this rule and other required information to the U.S. Senate, the U.S. House of Representatives, and the Comptroller General of the United States prior to publication of this final rule in the **Federal Register**. This final rule is not a ''major rule'' as defined by 5 U.S.C. 804(2).

List of Subjects in 40 CFR Part 180

Environmental protection, Administrative practice and procedure, Agricultural commodities, Pesticides and pests, Reporting and recordkeeping requirements.

Dated: July 1, 2004.

James Jones,

Director, Office of Pesticide Programs.

■ Therefore, 40 CFR chapter I is amended as follows:

PART 180—[AMENDED]

■ 1. The authority citation for part 180 continues to read as follows:

Authority: 21 U.S.C. 321(q), 346a and 371.

■ 2. Section 180.602 is added to subpart C to read as follows:

§ 180.602 Spiroxamine; tolerances for residues.

(a) *General*. Tolerances are established for the combined residues of

the fungicide spiroxamine (8-(1,1-dimethylethyl)-N-ethyl-N-propyl-1,4-dioxaspiro[4,5]decane-2-methanamine) and its metabolites containing the N-ethyl-N-propyl-1,2-dihydroxy-3-aminopropane moiety, calculated as parent equivalent, in or on the following raw agricultural commodities:

Commodity	Parts per million
Banana (import)	3.0
Grape (import)	1.0
Hop, dried cones	50

(b) *Section 18 emergency exemptions.* [Reserved]

(c) *Tolerances with regional registrations.* [Reserved]

(d) *Indirect or inadvertent residues.* [Reserved]

[FR Doc. 04–16216 Filed 7–15–04; 8:45 am]

BILLING CODE 6560–50–S

ENVIRONMENTAL PROTECTION AGENCY

40 CFR Part 194

[FRL–7787–6]

RIN 2060–AJ07

Criteria for the Certification and Recertification of the Waste Isolation Pilot Plant's Compliance With the Disposal Regulations; Alternative Provisions

AGENCY: Environmental Protection Agency (EPA).

ACTION: Final rule.

SUMMARY: The Environmental Protection Agency (''EPA'' or ''the Agency'' or ''we'') is finalizing changes to the ''Criteria for the Certification and Recertification of the Waste Isolation Pilot Plant's Compliance with the Disposal Regulations,'' (''Compliance Criteria'') proposed August 9, 2002 (67 FR 51930–51946). Today, after considering public comments received in response to the proposed changes, we finalize the following actions: Addition of a mechanism to address minor changes to the provisions of the Compliance Criteria; changes to the approval process for waste characterization programs at Department of Energy (DOE) transuranic (TRU) waste sites; changes to the number of copies of compliance applications and reference materials submitted to EPA; and replacement of the term ''process knowledge'' with ''acceptable knowledge.'' Today's action will maintain or improve our oversight at WIPP to ensure safe disposal of waste. Moreover, these changes do not modify the technical approach that EPA employs when conducting independent inspections of the waste characterization capabilities at DOE waste generator/storage sites. EPA is conducting this action in accordance with the procedures for substituting alternative provisions in the Compliance Criteria.

DATES: This final rule is effective October 14, 2004.

FOR FURTHER INFORMATION CONTACT: Ray Lee; telephone number: (202) 343–9463; postal address: Radiation Protection Division, Mail Code 6608J, U.S. Environmental Protection Agency, 1200 Pennsylvania Avenue, NW., Washington, DC 20460.

SUPPLEMENTARY INFORMATION:

I. General Information

A. How Can I Get Copies of This Document and Other Related Information?

1. *Docket.* EPA has established an official public docket for this action under Docket ID No. OAR–2002–0005. The official public docket consists of the documents specifically referenced in this action, any public comments received, and other information related to this action. Although a part of the official docket, the public docket does not include Confidential Business Information (CBI) or other information whose disclosure is restricted by statute. The official public docket is the collection of materials that is available for public viewing at: Air and Radiation Docket and Information Center, Room B–108, U.S. Environmental Protection Agency, 301 Constitution Ave., NW., Washington, DC. This Docket Facility is open from 8:30 a.m.–4:30 p.m., Monday through Friday, excluding legal holidays. The Docket telephone number is (202) 566–1742.

2. *Electronic Access.* You may access this **Federal Register** document electronically through the EPA Internet under the ''Federal Register'' listings at *http://www.epa.gov/fedrgstr/.*

An electronic version of the public docket is available through EPA's electronic public docket and comment system, EPA Dockets. You may use EPA Dockets at *http://www.epa.gov/edocket/* to view public comments, access the index listing of the contents of the official public docket, and to access those documents in the public docket that are available electronically. Although not all docket materials may be available electronically, you may still access any of the publicly available docket materials through the docket facility identified in Unit I.B. Once in the system, select ''search,'' then key in the appropriate docket identification number (OAR–2002–0005 for this action).

Abbreviations Used in This Document

AK—Acceptable Knowledge
ANL–E—Argonne National Laboratory-East
APA—Administrative Procedure Act
BID—Background Information Document
CBFO—Carlsbad Field Office
CFR—Code of Federal Regulations
CH—Contact Handled
DOE—Department of Energy
EPA—Environmental Protection Agency
INEEL—Idaho National Energy and Engineering Laboratory
LANL—Los Alamos National Laboratory
NDA—Nondestructive Assay
NPRM—Notice of Proposed Rulemaking
NRC—Nuclear Regulatory Commission
NTS—Nevada Test Site
ORNL—Oak Ridge National Laboratory
PK—Process knowledge
RFETS—Rocky Flats Environmental Technology Site
RTR—Real-time radiography
SRS—Savannah River Site
TRU—Transuranic
VE—Visual inspection
WC—Waste characterization
WIPP—Waste Isolation Pilot Plant
WIPP LWA—WIPP Land Withdrawal Act
WWIS—WIPP Waste Information System

Table of Contents

I. What is the WIPP?
II. What changes did EPA propose?
A. Proposed changes to § 194.6—process for adding minor alternative provisions
B. Proposed changes to § 194.8(b)—waste generator site inspection and approval process
C. Proposed changes to §§ 194.12 and 194.13—number and form of DOE compliance applications and reference materials
D. Proposed changes to §§ 194.2 and 194.24(c)(3)—terminology related to waste characterization
III. What is EPA's final action in consideration of public comments?
A. Summary of comments and final changes to § 194.6—process for adding minor alternative provisions
B. Summary of comments and Final changes to § 194.8(b)—waste generator site inspection and approval process
C. Summary of comments and final changes to §§ 194.12 and 194.13—number and form of DOE compliance applications and reference materials
D. Summary of comments and final changes to §§ 194.2 and 194.24(c)(3)—terminology related to waste characterization
IV. Statutory and Executive Order Reviews
A. Executive Order 12866
B. Congressional Review Act
C. Regulatory Flexibility Act
D. Paperwork Reduction Act
E. Unfunded Mandates Reform Act
F. Executive Order 12898
G. National Technology Transfer & Advancement Act of 1995
H. Executive Order 13045: Children's Health Protection

I. Executive Order 13132: Federalism
J. Executive Order 13175: Consultation and Coordination With Indian Tribal Governments
K. Executive Order 13211: Energy Effects

I. What Is the WIPP?

The Waste Isolation Pilot Plant (''WIPP'') is a disposal system for transuranic (TRU) radioactive waste. Developed by the Department of Energy (''DOE'' or ''the Department''), the WIPP is located near Carlsbad in southeastern New Mexico. TRU waste is emplaced 2,150 feet underground in an ancient layer of salt that will eventually ''creep'' and encapsulate the waste containers. The WIPP has a total capacity of 6.2 million cubic feet of TRU waste. Most TRU waste proposed for disposal at WIPP consists of items that have become contaminated as a result of activities associated with the production of nuclear weapons (or with the cleanup of nuclear weapons production facilities), such as, rags, equipment, tools, protective gear, and sludges. Some TRU waste is contaminated with hazardous wastes regulated under the Resource Conservation and Recovery Act (42 U.S.C. 6901–6992k) (''RCRA''). The waste proposed for disposal at WIPP is currently stored at Federal facilities across the United States, including locations in Colorado, Idaho, New Mexico, Nevada, Ohio, South Carolina, Tennessee, and Washington.

The WIPP must meet EPA's generic disposal standards at 40 CFR part 191 for high-level and TRU radioactive waste. These standards establish numeric limits to ensure that the WIPP effectively contains radioactive waste. To determine whether the WIPP performs well enough to meet these disposal standards, EPA issued the WIPP Compliance Criteria (40 CFR part 194) in 1997. The Compliance Criteria interpret and implement the disposal standards specifically for the WIPP site. They describe what information DOE must provide, how EPA evaluates the WIPP's performance, and provides ongoing independent oversight.

Using the process outlined in the WIPP Compliance Criteria, EPA determined on May 18, 1998, that DOE had demonstrated that the WIPP complied with EPA's radioactive waste disposal regulations at subparts B and C of 40 CFR part 191. EPA's certification determination permitted the WIPP to begin accepting transuranic waste for disposal, provided that other applicable environmental regulations were met. Also, the disposal of TRU waste at WIPP is conditioned on the EPA determination that activities conducted at waste generator sites appropriately comply with the quality assurance (QA) and waste characterization (WC) requirements established at § 194.22 and § 194.24, respectively. (For a detailed discussion on all of the proposed changes, see 67 FR 51930–51946; August 9, 2002.)

II. What Changes Did EPA Propose?

On August 9, 2002, EPA proposed to revise certain provisions of the Compliance Criteria at 40 CFR part 194. Specifically, EPA proposed to revise the following: (1) Process for establishing ''alternative provisions'' in § 194.6; (2) approval process in § 194.8 for waste characterization processes at TRU waste generator/storage sites used to characterize TRU waste prior to its disposal at WIPP; (3) requirements in §§ 194.12 and 194.13 for submission of compliance applications and reference material; and (4) replace the term ''process knowledge'' with ''acceptable knowledge'' in §§ 194.2 and 194.24(c)(3). The proposed revisions intend to ensure that 40 CFR part 194 remains comprehensive, appropriate, and is based upon current knowledge and information. The Agency solicited comments on this proposal over a period of 120 days. In addition, in September 2002, EPA held public hearings at Albuquerque and Santa Fe, New Mexico. The transcripts of the hearings have been placed in the EPA Docket supporting this final action (EDOCKET ID#: OAR–2002–0005).

A. Proposed Changes to § 194.6—Process for Adding Minor Alternative Provisions

Section 194.6 establishes procedures applicable to substitution of alternative provisions for any of the Compliance Criteria. Such substitutions require a notice-and-comment rulemaking in accordance with § 194.6(a). In addition, § 194.6 stipulates that EPA's notice of proposed rulemaking (NPRM) addresses specific aspects of the proposed substitution, includes a public comment period of at least 120 days, and public hearings in New Mexico.

Based on EPA's oversight experience at the WIPP and TRU waste generator/storage sites, EPA proposed to revise § 194.6 to add a rulemaking process for substituting ''minor alternative provisions'' of the Compliance Criteria. The proposed changes for § 194.6 comport fully with the radioactive waste disposal regulations at 40 CFR part 191 and would not substantively alter the scope of the TRU waste disposal requirements. EPA also proposed to add to § 194.2 the definition of ''minor alternative provision'' to be a provision that clarifies a regulatory provision without substantively altering the existing regulatory requirement. Thus, revisions that do not alter the intent or the approach to verifying compliance of an existing regulatory requirement would be considered ''minor alternative provisions.''

B. Proposed Changes to § 194.8(b)—Waste Generator Site Inspection and Approval Process

The information outlined in § 194.8 describes the process by which EPA inspects and approves waste characterization (WC) activities at TRU waste sites. (For a detailed discussion, see 67 FR 51934–38.) Previously, every time a TRU waste site sought approval of its WC processes or TRU waste stream(s), EPA was required to conduct a site inspection under the authority of § 194.8. The § 194.8 process required EPA to issue a **Federal Register** notice announcing an inspection, open a 30-day public comment period, and docket WC-related material provided by the site for public review. The same process was required to approve all subsequent expansions of the WC program to new processes or waste streams at a site. Instead, we proposed that EPA will conduct only a single baseline site inspection under § 194.8 to determine whether a given site can adequately characterize TRU waste and comply with the regulatory requirements imposed on the TRU waste destined for the disposal at WIPP. Also, we proposed that all additional inspections at an approved site would be conducted under authority of § 194.24(h) (not under § 194.8) to approve changes or expansions to the WC processes and waste streams approved during the initial site approval referred to as the ''Baseline Compliance Decision.'' (See discussion in IV.B below.) The second key change we proposed was giving the opportunity for public comment on EPA's proposed approval of the site's waste characterization program. The proposed approval and accompanying inspection report would discuss inspection results and the waste characterization program documentation provided by the site. In addition, we proposed that the Agency would issue a final approval decision only after consideration of the public comments received in response to the proposed site approval.

EPA will issue a single **Federal Register** notice after each of the initial baseline inspections. The public will be asked to comment on the proposed approval and reporting requirements for each of the waste generator sites. The results of all EPA site inspections (under § 194.8 *and* § 194.24) and other

relevant information/updates will be made available to the public in EPA's dockets, WIPP Web site, and other means. We determined that the revised process provides equivalent or improved oversight, more control over schedule, better prioritization of technical issues and distinctions, and flexibility to address relative levels of experience or expertise at various DOE sites.

C. Proposed Changes to §§ 194.12 and 194.13—Number and Form of DOE Compliance Applications and Reference Materials

Section 194.12 of the Compliance Criteria requires DOE to submit 30 copies of the compliance applications and any accompanying materials to the Administrator in printed form. This provision also applies to the compliance applications periodically submitted by DOE for re-certification of compliance. Section 194.13 requires that 10 printed copies of referenced materials be submitted to the Administrator, unless such materials are generally available.

We proposed to revise § 194.12 to change the number of printed copies of compliance applications and reference materials that DOE must submit to EPA. We proposed to reduce the number of hard copies from 30 to 5 (one original and four printed copies). In addition, the proposed revisions § 194.12 required that DOE submit 10 complete compliance applications by alternative means (*e.g.,* compact disk) or other approved format. Also, the Agency proposed to revise § 194.13 by changing the number of copies in printed form of the reference materials from 10 to 5 and to require DOE to submit 10 copies of reference materials by alternative means (*e.g.*, compact disk) or other approved format. We determined that the proposed revisions for §§ 194.12 and 194.13 would (a) improve the Agency's evaluation process and reduce costs associated with the review of compliance applications and reference materials; (b) enhance the public's access to information via Internet ability to participate more actively in the public comment process; and (c) reduce the number of copies in printed form that must be submitted, thereby reducing paper usage.

D. Proposed Changes to §§ 194.2 and 194.24(c)(3)—Terminology Related to Waste Characterization

The Agency proposed to revise § 194.24(c)(3) by replacing the term ''process knowledge'' with the term ''acceptable knowledge.'' The term ''acceptable knowledge'' has been used by EPA and DOE since the Department submitted the Compliance Certification Application, during both the certification rulemaking and subsequent site inspections. For consistency, the Agency also proposed to add the definition of ''acceptable knowledge'' to § 194.2.

III. What Is EPA's Final Action in Consideration of Public Comments?

Over the 120-day comment period for the proposed rule, EPA received 17 sets of comments (7 from the public hearings, 4 from EDOCKET, and 6 through e-mail/regular mail). During the two public hearings held in Albuquerque and Santa Fe, New Mexico, 7 individuals presented their views related to the proposal. This preamble responds to all major comments.

The Response to Comments Document placed in the docket (EDOCKET ID#: OAR–2002–0005 discusses individual comments that EPA received and EPA's responses to those comments. Below we discuss changes that we made in response to the public comment and the rationale for today's final action.

A. Summary of Comments and Final Changes to § 194.6—Process for Adding Minor Alternative Provisions

In the proposed rule, we discussed why EPA considers that the existing provisions specific to minor revisions are unnecessarily stringent and why the change is necessary (67 FR 51933–34). EPA's oversight experience indicates that minor revisions to the Compliance Criteria requirements may improve implementation and consistency in regulatory compliance. Also, we acknowledged that for all alternative provisions that do not meet the proposed definition of ''minor alternative provisions,'' the Agency will continue to comply with the current requirements of § 194.6.

EPA proposed ''minor alternative provision'' as an alternative provision that ''clarifies a regulatory provision, or does not substantively alter the existing regulatory requirement.'' Thus, revisions that do not alter the intent or the approach to verifying compliance of an existing regulatory requirement are considered to constitute minor alternative provisions. As examples, we cited the proposed revisions to §§ 194.2, 194.12, 194.13, and 194.24(c)(3) as minor revisions which the commenters supported (see Response to Comments Document, EDOCKET ID#: OAR–2002–0005). Some commenters suggested an alternate definition to better clarify the intent. In today's action, we have added additional language to the definition to emphasize that a ''minor alternative provision'' would *only* clarify an existing regulatory provision and not substantially alter the regulatory requirements. The EPA is finalizing this definition for ''minor alternative provision'' which comports fully with the radioactive waste disposal regulations at 40 CFR part 191. In addition, this definition does not substantively alter the scope of the Compliance Criteria. More substantial revisions to 40 CFR part 194 would continue to follow the process laid out originally in § 194.6 and now contained at § 194.6(a). We believe this change will make EPA's regulatory activities more efficient and improve the implementation of minor revisions to the Compliance Criteria.

We proposed that a 30-day comment period is sufficient for the public to provide the Agency with relevant input on such minor revisions to the Compliance Criteria. In addition to the publication of a proposed rule in the **Federal Register** for minor provisions, EPA committed to announce the proposal on the Agency's Web site and place all relevant supporting materials in the Agency's public docket. Public comments expressed concern that a 30-day comment period is too short a time to comment on EPA's proposals concerning minor revisions to the Compliance Criteria. The streamlined process for minor provisions is intended to apply to changes that provide clarification and are uncontroversial or purely administrative—not highly technical or complex actions. Therefore, the Agency believes that in most cases a 30-day comment period will be sufficient and has retained this minimum requirement in the final rule. The Agency retains discretion to extend the comment period when deemed necessary.

B. Summary of Comments and Final Changes to § 194.8(b)—Waste Generator Site Inspection and Approval Process

1. Background

As discussed in the proposed rule, the purpose of EPA inspections at DOE sites is to verify that TRU waste sites are characterizing and tracking waste to ensure the volume and characteristics of the wastes conform with the requirements of the WIPP LWA and the specific conditions of the Certification Decision. The requirements at § 194.8(b) establish a process by which EPA determines whether DOE complies with Condition 3 of the Certification Decision. This requires that the Agency approve the programs for characterizing TRU waste streams using the process set

forth in § 194.8. (See 40 CFR part 194, appendix A.) Section 194.8 requires that, prior to sending waste from a generator site for disposal at WIPP, DOE must implement and obtain EPA approval of the ''system of controls'' (that is, personnel, equipment, and procedures) used at the site to characterize the waste and measure the waste contents determined to be significant (*i.e.*, ten significant radionuclides, ferrous and non-ferrous metals, cellulosics, plastics and paper) (63 FR 27392, May 18, 1998). Before approving DOE sites' waste characterization activities, EPA must inspect individual sites to verify that the sites have adequately implemented the proposed characterization programs.

2. Baseline Inspection Process

Under the revised inspection and approval process, EPA proposed the following changes (67 FR 51934–41; August 9, 2002):

- Conduct a baseline inspection at all TRU waste generator/storage sites once in accordance with the § 194.8 requirements and approve different WC program components based on the site's demonstration of its capabilities;
- Issue a **Federal Register** notice discussing § 194.8 inspection results and EPA's proposed ''Baseline Compliance Decision.'' The notice will specify what subsequent WC program changes or expansion must undergo further EPA inspection or approval under § 194.24 by assigning ''tiering'' designations to these activities. The notice will provide in detail the reasons for supporting the approval of individual WC program components, tier assignments and accompanying reporting requirements, and any limitations.
- Seek public comment on the proposed Baseline Compliance Decision (*i.e.,* comment on which activities should be assigned to each tier) and place the supporting documents in the public docket as described in § 194.67; and
- Evaluate and approve, if necessary, changes to the approved WC program activities at all sites. Inspections necessary for evaluation and/or approval of the changes will be conducted under authority of § 194.24(h), not under § 194.8. (No change in the continued compliance inspections at sites approved per the Baseline Compliance Decision.)

Today, we are finalizing the above aspects of our proposed inspection and approval process. We believe that these changes will not in any way compromise EPA's ability to oversee TRU waste sites' compliance with § 194.24 requirements. Also, these changes will clearly delineate the reasons for and the timing of the approval of different WC program component changes and the waste streams that must be approved by EPA. These changes will give TRU waste sites flexibility to seek limited or broader approval during the initial inspection by demonstrating that their WC programs can appropriately characterize a limited number or wide spectrum of TRU wastes. EPA, under its continued compliance authority, will verify that all sites characterize TRU wastes using only the EPA-approved WC programs.

We believe these changes will not lessen, but rather strengthen our ability to oversee DOE's TRU waste characterization activities and monitor sites' compliance with Condition 3 of the WIPP Certification Decision. The new process will not alter our authority or a site's ability to limit or expand the scope of WC program components. Rather, it will enable us to determine independently whether a subsequent inspection is necessary, when it should occur or whether a decision to allow a site to implement a change without EPA's approval is appropriate.

Many commenters were very concerned that the revised approval scheme would reduce the frequency of EPA inspections or even that once approved, sites might be able to operate WC programs indefinitely with little or no EPA oversight. They also expressed concern that the proposed tiering process allows undue discretion by DOE in determining what WC program changes at generator sites are significant. The comments indicate that EPA did not make sufficiently clear the nature and purpose of the proposed changes to the inspections process. In response, we find that it is necessary to further clarify and elaborate on the revised approval process and its implementation.

EPA does not believe that the proposed changes would reduce either the number of inspections nor the level of oversight and enforcement at DOE sites. The changes will modify the EPA inspection and approval procedures, but will not necessarily affect the frequency or number of times a site will be inspected. Under 40 CFR part 194, EPA may inspect DOE TRU sites' waste characterization activities using the inspection authority under § 194.8 and § 194.24. The new process provides that the individual waste generator sites will need only one § 194.8 approval from EPA to conduct WC activities. However, this single § 194.8 approval will specify any limitations on the approval that will necessitate additional inspections by EPA. Any such additional inspections will be conducted under authority of § 194.24(h), not under § 194.8. Limitations on the initial § 194.8 approval may relate to waste streams, waste categories, processes, or other factors deemed important by EPA and will specify what WC program expansions or changes must undergo further EPA inspection or approval under § 194.24. Furthermore, EPA's proposed Baseline Compliance Decision, including any proposed limitations, will be subject to public comment.

The Agency does not agree that it is necessary to require a re-evaluation of EPA's site-specific Baseline Compliance Decisions at a set interval. As discussed in the preamble to the proposed rule and reiterated above, EPA will conduct additional site inspections under § 194.24 to verify continued compliance with the baseline approval in accordance with the tiering designations or as otherwise deemed necessary. Since 1998, EPA has inspected WC programs at TRU waste sites under § 194.24 on an approximately annual basis. We are likely to maintain at least the same frequency for future continued compliance inspections under § 194.24 and may inspect more frequently as certain activities warrant. A reduced frequency of inspections might also be warranted if, for example, a site has no characterization activity over a period of time. The final rule offers flexibility in scheduling inspections as necessary while not diminishing in any way the effectiveness of our inspections program.

Generally, the Agency has conducted continuing compliance inspections to coincide with DOE's annual recertification audits. In its comments, DOE has requested that EPA continue to conduct the baseline inspections at the approved sites when DOE performs these audits. However, since the site inspections EPA would conduct to derive the Baseline Compliance Decision would be more detailed than DOE's annual recertification audits, these inspections will be scheduled by EPA and may or may not coincide with the DOE's recertification audits.

Because EPA expects to continue to inspect sites regularly, we do not believe it is necessary to specify an expiration date for the baseline compliance approval. Through ongoing compliance inspections (prompted by tiered activities/changes at the site or at EPA's own discretion under § 194.24), EPA will validate that approved processes and equipment continue to be adequately implemented. The baseline approval will remain valid so long as

the site continues to demonstrate appropriate use of approved processes.

Table 1 provides a comparison of the previous site inspection/approval process and the new Baseline Compliance Decision process. By adopting the WC program approval process we are finalizing today, EPA will achieve the following goals:

1. Maintain or improve oversight;
2. Improve public involvement and allow direct input in approval decisions;
3. Allow greater discretion in establishing technical priorities and accommodating varying degrees of WC experience at generator sites; and
4. Reduce regulatory burden by limiting **Federal Register** announcements under § 194.8 that the Agency must issue, and allow greater flexibility in scheduling inspections.

TABLE 1.—CURRENT APPROVAL AND BASELINE COMPLIANCE DECISION PROCESSES

Activity	Current inspection/ approval process	Baseline compliance decision process	Comment
Regulatory driver for waste characterization inspection.	§ 194.8	§ 194.8	Meet Condition 3 of the WIPP Certification Decision.
Notifying EPA of its readiness	Yes	Only new sites seeking initial approval.	EPA will inform each site with an approved WC program the timing for the inspection.
Announce inspection in **Federal Register** notice.	Every time a site seeks EPA approval to use a new or modified WC process or to ship any new TRU waste stream or a group of waste streams for disposal.	—Only for Baseline inspection to approve site-specific WC program. —No FR announcements for all followup tier-designated approvals.	
Report information specific to WC processes.	DOE must provide waste characterization plan and quality assurance program plan for each initial approval.	—For the Baseline inspection EPA will tell sites the type of information needed. —For followup inspections sites will provide information specified under each of the WC process tiers.	
Assign tiers based on adequacies and limitations of WC processes demonstrated.	No	Yes	Will require a thorough, detailed review to identify situations that would require EPA approval.
Require followup/additional inspections before approval.	Rarely	Possible	If the potential application of different WC components covers a wide spectrum of TRU waste streams.
Seeking public comment on the inspection results and pending approval.	No	Yes.	
Issuing a site approval decision	30 days after the announcement of the inspection in the FEDERAL REGISTER.	After the end of public comment period allowed to respond to the pending site approval decision announced in the FEDERAL REGISTER.	Increased public involvement; transparent decision process.
Require additional § 194.8 inspections.	For any new WC equipment/process or a waste stream approval.	No	The need for additional § 194.8 inspections negated by tiering signifying the need for approval under § 194.24.
Inspect sites for continued compliance under § 194.24 and issuing a letter and an inspection report.	Yes	Yes	To ensure that site is using previously approved WC program components to characterize and quantify TRU waste contents.
Inspect sites to evaluate changes to the approved WC processes.	When the site informs EPA of the need.	Identified by EPA as part of the tiering assignments.	Eliminates interpretation and/or guess work by site for the need for EPA approval.

When inspecting a waste generator site to render a Baseline Compliance Decision, EPA inspectors will evaluate each WC program component (equipment, procedure, and personnel training/experience) for its adequacy and appropriateness in characterizing TRU waste destined for WIPP disposal. The elements of this inspection will be the same as those followed in the current site inspection process discussed in the proposal (67 FR 51935–36). Depending on the site's demonstration of WC capabilities, the baseline inspection could cover a broad spectrum of WC processes and waste streams or could be limited to specific equipment or one waste stream. During the inspection a site must demonstrate its capabilities to characterize TRU waste(s) using appropriate equipment, procedures, and personnel and comply with the regulatory limits under § 194.24. The site also must demonstrate how the WC information is compiled and tracked using the EPA-approved WIPP Waste Information System (WWIS).

Under today's rule, EPA's baseline approval will specify any limitations on the approval. It will also specify what subsequent WC program changes or expansion must undergo further EPA inspection or approval under § 194.24 by assigning ''tiers'' to each of these activities. The tiering will be based on the following: Which WC processes the site has demonstrated to be suitable to and capable of characterizing a given

TRU waste type and the historical knowledge about the physical and radiological waste characteristics. EPA *will assign* the tiering designations. This eliminates the possibility of misinterpretation on DOE's part and the possibility of EPA not agreeing with DOE's selection of a tier. In addition, the public will have the opportunity to comment on which activities should be assigned to each tier.

EPA would like to further clarify the details of the tiers. Tier 1 waste characterization activities at a site will have more stringent reporting requirements. These activities will require notification by DOE and approval by EPA *prior* to shipment of waste to the WIPP. We expect to conduct site inspections as part of our decision-making process for many Tier 1 activities. Tier 2 activities will have more moderate reporting requirements and EPA may approve changes to certain activities without a follow-up inspection (*i.e.,* desktop review and approval of certain technical documents). These activities will require a notification by DOE to EPA on the specific changes; however, waste can be shipped to the WIPP without prior Agency approval. For Tier 2 notifications, EPA will review the documentation provided by DOE and reply only if additional information or analysis is needed. Other changes (*i.e.,* if no tier is specified) will be captured in DOE's annual change reports or continuing compliance inspections under § 194.24.

DOE will report any changes in equipment, processes, or personnel, based on their tier level, and certain changes must be reported to EPA before the sites are allowed to ship waste using the waste characterization activities in question. EPA will then decide whether or not a follow-up inspection is necessary to confirm and verify the adequacy of any changes to the site's waste characterization program. EPA may also conduct unannounced site inspections of a tiered activity if EPA determines a need based on the available information. Below are examples of how the tiers may be assigned:

- In its baseline inspection by EPA, a site (''Site 1'' in this example) demonstrates that it can quantify 10 WIPP-tracked radionuclides *only* in homogeneous organic solids using a particular piece of radioassay equipment (''Equipment A'' in this example). The baseline approval for Site 1 is issued and the non-destructive assay (NDA) equipment is approved with the limitation that it may be used to characterize *only* homogeneous solids. As part of the baseline approval, the change to use Equipment A on a new waste stream is designated a Tier 1 change. Therefore, if Site 1 would like to use Equipment A to characterize inorganic sludge then an additional EPA approval will be necessary.
- Site 1 would now like to use a different piece of equipment (''Equipment B'' in this example) to characterize the same waste stream that they are already approved for (in this case, homogeneous solids). Equipment B is nearly identical to Equipment A in specifications and operating controls. As part of the baseline approval, EPA specifies that using equivalent equipment to characterize an approved waste stream is a Tier 2 change. Therefore, Site 1 notifies EPA of its plans, provides documentation to EPA that Equipment A and B are equivalent, and can install and operate the new equipment without prior approval by the Agency.

For both Tier 1 and 2 changes, DOE *must* submit to EPA information discussing the relevant program changes for our evaluation. Prior to approval, Tier 1 changes may require an inspection to obtain objective evidence demonstrating a site's WC program adequacy and WC data showing compliance with the WIPP compliance criteria at 40 CFR 194. EPA will docket and post information from these § 194.24 inspections on the WIPP Web site for public review. Generally, Tier 2 changes would not require inspections, provided that EPA is satisfied with the information submitted by DOE regarding the changes. EPA's approval letter discussing Tier 1 or Tier 2 changes would explain how the available information was sufficient to justify a decision, or what additional information was collected during an inspection, if one was conducted. Also, EPA will docket and post on the WIPP Web site the Tier 2 approval letter and DOE submission for public review.

Major sites with an approved waste characterization program (Hanford, LANL, INEEL, RFETS, and SRS) and those requiring EPA approval (such as Oak Ridge National Laboratory) will be subject to a mandatory inspection to render the site-specific Baseline Compliance Decision and accompanying tiers. A few commenters misconstrued that once the Agency renders a Baseline Compliance Decision specific to the DOE's Central Characterization Project (CCP), the CCP can apply the approved WC activities at any TRU site. Commenters are incorrect with their understanding of the limitations of EPA's CCP approval. Currently, EPA inspects and approves the CCP program at each site and the approval is site-specific whenever a site hires CCP to characterize their TRU waste. EPA has followed this approach and has approved the CCP WC activities at the SRS, ANL–E, and NTS. Once today's rule becomes effective, EPA will inspect the above major sites with approved WC programs, sites with the approved CCP WC activities, and the remaining TRU waste generator/storage sites and render a Baseline Compliance Decision specific to each individual site. Each TRU site with an approved WC program may continue to dispose of their approved TRU waste streams at the WIPP. All TRU waste sites remain subject to applicable Federal and State regulations governing packaging, transportation, and disposal regulations for TRU waste.

Once the Baseline Compliance Decision has been made and tiers have been assigned at each site, the EPA may decide to revise the tiering designations, based on a variety of factors. Some sites may have a harder time converting to the more robust inspections regime, and certain aspects of their WC program that were strong in the past may need more intense scrutiny. Conversely, certain sites will undoubtedly improve their overall performance as they become accustomed to the new system, and certain aspects of their WC program will subsequently require less attention.

The decision to revise tiers at a site will be made through continued compliance inspections under the authority of § 194.24(h), as previously discussed. The Agency will announce the proposed tier changes and the reasoning behind them in the site's inspection report, which will be posted on the WIPP Web site and docketed in accordance with § 194.67. If the tier change is an elevation in stringency from Tier 2 to Tier 1 (*i.e.,* additional DOE reporting requirements for that particular waste characterization component or activity), the change will be effective immediately and the site will be expected to operate under the more stringent requirements without delay. If, however, the change is a ''downgrade'' in stringency from Tier 1 to Tier 2, the inspection report will solicit comments from the public, for a minimum of 30 days, to let them raise any concerns they might have. The site will continue to operate under the more stringent tier designation until public comment can be considered.

The site inspections necessary to develop the Baseline Compliance Decision have three components which we will include in our inspection report: (a) Description of what we inspected and found to be technically

adequate; (b) tiering of WC elements and the basis for the tiering assignment; and (c) identification of site's subsequent reporting requirements for the specific WC elements. Currently, EPA inspection reports describe what we inspect, what we determine to be technically adequate, what we identify as deficiencies and whether any corrective action is required before EPA approval. Under the new process, we will continue to complete a report containing these elements. In addition, the inspection will allow us to determine WC component modifications requiring EPA approval.

The results of all EPA site inspections (and their accompanying inspection reports), under § 194.8 *and* § 194.24, will be made available to the public in EPA's dockets, WIPP Web site, and other means. If, at any time, we determine that the system of controls at a site is not adequate to characterize certain waste streams, EPA retains authority to direct that the site may not dispose of material from those waste streams or processes at the WIPP until the Agency's findings have been adequately resolved.

3. Opportunity for Public Comment & Length of Public Comment Periods

As previously discussed, the Agency aims to improve public participation by providing an opportunity to comment on EPA inspection reports and proposed approval decision in addition to DOE program documents and other information. Thus, the public would be well informed about the inspection that was performed, which decisions are proposed and why, and can provide comments related to the approval and tiering process.

After completing the baseline § 194.8 inspections to determine capabilities and adequacy of WC program at each TRU site, EPA will prepare an inspection report discussing the inspection process and the findings and/or concerns. The site-specific inspection report will discuss various WC process-specific tiers and their basis. They will also contain subsequent reporting requirements for the WC program components. Using this information, we will issue the proposed Baseline Compliance Decision in the **Federal Register** for public comment (see discussion for the public comment period below). In addition, we will make available in the EPA Docket our inspection report and the site-specific waste characterization documents for public review. Most commenters responding to this issue supported the proposal. One commenter contended that this would result in unnecessary operational delays and costs. As discussed in the Response to Comments Document (See EDOCKET ID#: OAR–2002–0005), EPA does not agree with the reasoning as the approved TRU sites can continue to dispose of their approved waste streams at the WIPP.

Today, we are finalizing a 45-day comment period when seeking public comment related to EPA's site-specific Baseline Compliance Decision and associated tier assignments. Several commenters stated that a 30-day comment period is not adequate, especially considering the amount and nature of the technical material kept in the docket and commenters' other work priorities. As discussed in the Response to Comments Document (EDOCKET ID#: OAR–2002–0005), the public-notice-and-approval process described in § 194.8(b) has not yielded the level of comment that we anticipated.

Over the past 4 years, EPA has made every effort to inform public of EPA inspections when necessary by issuing a **Federal Register** notice and posting updates on the EPA's WIPP Web site. DOE documents and other material related to these inspections has also been docketed at each of our docket locations. However, we recognize that the highly technical nature of the documents available for comment may have discouraged public participation. In recognition of this, the changes to the site approval process include significant changes to the public comment process. The changes allow for comment not only on DOE's technical documents, but also on EPA's proposed decision on site approval. The public will also be able to comment directly on the proposed tiering designations (and associated level of EPA review and approval) for subsequent changes or expansions of the WC program at a given site. A minimum 45-day comment period will be opened for the proposed Baseline Compliance Decisions at each site. As a general rule, EPA will allow 45 days for receiving public comment and may provide additional time on a case-by-case basis when needed. Thus, the public will have an opportunity to review and comment on EPA's proposed Baseline Compliance Decisions and inspection reports prior to site approvals.

The Agency also acknowledges that the **Federal Register** is not the only effective tool for providing information to the public. Under these revisions, EPA will issue a **Federal Register** notice for the initial Baseline Compliance Decision at each site. EPA also expects to use e-mail, web updates, and other more user-friendly communication tools to notify stakeholders of the occurrence and results of baseline approvals and subsequent ongoing inspections.

As discussed previously (see Section III.B.2), if EPA deems that a change in tiering designation (from Tier 1 to Tier 2) at a site is warranted, the Agency will announce the proposed changes and the reasoning behind them in the site's inspection report, which will be posted on the WIPP Web site and placed in the dockets. EPA will also open a minimum 30-day comment period on the proposed change. However, where circumstances warrant, EPA will consider a longer comment period.

4. Time Frame and Effective Date

Although today's actions will be effective on October 14, 2004, EPA expects that the baseline compliance inspections and approval process will be more wide-ranging than the current inspection regime since it will not be limited by waste stream designations and will explicitly address future expansions of the characterization program. The first approvals conducted under the new process are likely to be highly detailed and very intensive, since EPA will need to work with DOE and stakeholders to ensure that the full range of waste characterization activities is identified and placed in appropriate reporting/approval tiers. The final rule provides important flexibility to ensure that EPA can effectively implement—and that the public can fully understand and participate in—the new process. First, the final rule does not establish a time period within which EPA must ''convert'' sites to the new inspections and approval process. DOE sites with approved waste characterization programs will be allowed to continue operations under the existing inspection and approval process based on waste streams; the waste stream system, while less flexible than the newly revised process, remains rigorous and can continue to provide effective oversight during the transition period. We expect to review approved programs and issue new baseline approval decisions for those sites within approximately two years. However, the Agency retains the discretion to take longer (if warranted) by the complexity of technical issues or the scope of more comprehensive inspections. Similarly, we decline to limit the length of the comment period on proposed baseline approval decisions. We believe that limiting the available comment period would be counterproductive for both EPA and the public in adjusting to the new process, and could constrain discussion if unanticipated or especially complex issues arise.

5. Consideration of Resources

A few commenters endorsed the proposed changes to § 194.8, but did not necessarily agree with EPA's resource rationale. The Agency believes that the proposed changes are fully justifiable on a technical basis, as outlined above in Section III.B.2. While resource consideration is a valid factor, the discussion of resources in the preamble to the proposal may have been misleading in regard to its relative importance. The revised process provides equivalent or improved oversight, more control over schedule, better prioritization of technical issues and distinctions, and flexibility to address relative levels of experience or expertise at various DOE sites.

6. Compliance of Waste Generator Sites and the WIPP Facility

Some commenters expressed concern about the reference in the proposed § 194.8(b)(3)(i) to § 194.48(b)(1) and (2). They suggested that the provisions of § 194.4 are specific to the WIPP site itself and are not appropriate responses to noncompliance at a waste generator site. The Agency disagrees with those statements. Section 194.8(b)(4)(i) provides that EPA may suspend shipments of TRU waste from an approved TRU waste site if EPA subsequently determines that waste characterization programs or processes are not adequately established or implemented. In addition, if necessary, EPA may take action under § 194.4(b)(1) or (2). Section 194.4(b)(1) provides that EPA may suspend, modify, or revoke the certification of the WIPP. Suspension may be at the discretion of EPA; modification or revocation will be conducted by rule pursuant to 5 U.S.C. 553. Section 194.8(b)(3)(i) provides that EPA may request that DOE provide information to enable EPA to determine whether suspension, modification, or revocation of the certification is warranted. DOE's inability to properly establish, maintain, or implement adequate waste characterization activities at a waste generator site could lead to circumstances that necessitate consideration of suspension, modification, or revocation of the WIPP certification. Poorly and/or inadequately characterized waste when emplaced in the repository could be relevant to determining the long-term performance of the WIPP. Therefore, EPA disagrees that the provisions of § 194.4(b) are specific only to the WIPP facility, and can never be relevant to activities at a waste generator site.

C. Summary of Comments and Final Changes to §§ 194.12 and 194.13—Number and Form of DOE Compliance Applications and Reference Materials

EPA proposed to revise § 194.12 by changing the number of copies of compliance applications in printed form from 30 to 5 (one original and four printed copies). In addition, the Agency proposed to revise § 194.12 by requiring that DOE submit 10 complete compliance applications in alternative format (*e.g.,* compact disk) or other approved format. (For a detailed discussion, see 67 FR 51941–42.)

Also, the Agency proposed to revise § 194.13 by changing the number of copies in printed form of the reference materials from 10 to 5 and to require DOE to submit 10 copies of reference materials in alternative format (*e.g.,* compact disk) or other approved format.

Public comments were supportive of these proposed actions and therefore, we are finalizing the proposed requirements under § 194.12 and § 194.13. Commenters requested clarification that EPA's WIPP dockets would continue to be provided paper copies of application materials for public review. In accordance with § 194.67, the paper copies of compliance applications and related materials will be placed in the official docket in Washington, DC, and at the four informational dockets in New Mexico.

D. Summary of Comments and Final Changes to §§ 194.2 and 194.24(c)(3)—Terminology Related to Waste Characterization

Section 194.24, waste characterization, generally requires DOE to identify, quantify, and track the chemical, physical, and radiological components of the waste destined for disposal at WIPP that may influence disposal system performance. Section 194.24(c)(3) requires DOE to demonstrate that the use of process knowledge to quantify waste components conforms with the quality assurance (QA) requirements outlined in § 194.22. To demonstrate compliance, DOE must have information and documentation to substantiate that process knowledge data acquired and used during waste characterization activities are in compliance with the QA requirements.

The Agency proposed to revise § 194.24(c)(3) by replacing the term ''process knowledge'' with the term ''acceptable knowledge.'' The term ''acceptable knowledge'' has been the term used by EPA and DOE since DOE submitted the Compliance Certification Application, during both the certification rulemaking and subsequent site inspections. Use of the term ''acceptable knowledge'' in § 194.24(c)(3) in lieu of ''process knowledge'' will not alter our technical approach to verifying compliance during an inspection; rather, it will reflect our actual practice more accurately. (For a detailed discussion, see 67 FR 51942–43.)

For consistency with the change being proposed today for § 194.24(c)(3), the Agency also proposed to add the following definition of ''acceptable knowledge'' to § 194.2: ''*Acceptable knowledge* means any information about the process used to generate waste, material inputs to the process, and the time period during which the waste was generated, as well as data resulting from the analysis of waste conducted prior to or separate from the waste certification process authorized by EPA's Certification Decision, to show compliance with Condition 3 of the certification decision (40 CFR part 194, appendix A).''

Both of these changes as proposed were supported by commenters and therefore, we are finalizing the definition of ''acceptable knowledge'' in §§ 194.2 and 24(c)(3).

IV. Statutory and Executive Order Reviews

A. Executive Order 12866: Regulatory Planning and Review

Under Executive Order 12866, (58 FR 51735; October 4, 1993), the Agency must determine whether the regulatory action is ''significant'' and therefore subject to OMB review and the requirements of the Executive Order. The Order defines ''significant regulatory action'' as one that is likely to result in a rule that may: (1) Have an annual effect on the economy of $100 million or more or adversely affect in a material way the economy, a sector of the economy, productivity, competition, jobs, the environment, public health or safety, or State, local, or tribal governments or communities; (2) create a serious inconsistency or otherwise interfere with an action taken or planned by another agency; (3) materially alter the budgetary impact of entitlements, grants, user fees, or loan programs or the rights and obligations of recipients thereof; or (4) raise novel legal or policy issues arising out of legal mandates, the President's priorities, or the principles set forth in the Executive Order. It has been determined that this rule is not a ''significant regulatory action'' under the terms of Executive Order 12866 and is therefore not subject to OMB review.

B. Congressional Review Act

The Congressional Review Act, 5 U.S.C. 801 *et seq.,* as added by the Small Business Regulatory Enforcement Fairness Act of 1996, generally provides that before a rule may take effect, the agency promulgating the rule must submit a rule report, which includes a copy of the rule, to each House of the Congress and to the Comptroller General of the United States. EPA will submit a report containing this rule and other required information to the U.S. Senate, the U.S. House of Representatives, and the Comptroller General of the United States prior to publication of the rule in the **Federal Register.** A major rule cannot take effect until 60 days after it is published in the **Federal Register.** This action is not a ''major rule'' as defined by 5 U.S.C. 804(2). This rule will be effective 90 days from publication in the **Federal Register**.

C. Regulatory Flexibility Act

Today's final rule is not subject to the RFA, which generally requires an agency to prepare a regulatory flexibility analysis for any rule that will have a significant economic impact on a substantial number of small entities. The RFA applies only to rules subject to notice-and-comment rulemaking requirements under the Administrative Procedure Act (APA) or any other statute. This rule is not subject to notice and comment requirements under the APA or any other statute. This rule pertains to agency management or personnel, which the APA expressly exempts from notice-and-comment rulemaking requirements. 5 U.S.C. 533(a)(2).

Although this final rule is not subject to the RFA, EPA nonetheless has assessed the potential of this rule to adversely impact small entities subject to the rule. Small entities include small businesses, small not-for-profit enterprises, and small governmental jurisdictions. This final rule will not have a significant economic impact on a substantial number of small entities because it sets forth requirements which apply only to Federal agencies.

D. Paperwork Reduction Act

This final action does not impose an information collection burden under the provisions of the Paperwork Reduction Act, 44 U.S.C. 3501 *et seq.* The Compliance Criteria (in 40 CFR part 194) requirements are applicable only to DOE and EPA and do not establish any form of collection of information from the public. Burden means the total time, effort, or financial resources expended by persons to generate, maintain, retain, or disclose or provide information to or for a Federal agency. This includes the time needed to review instructions; develop, acquire, install, and utilize technology and systems for the purposes of collecting, validating, and verifying information, processing and maintaining information, and disclosing and providing information; adjust the existing ways to comply with any previously applicable instructions and requirements; train personnel to be able to respond to a collection of information; search data sources; complete and review the collection of information; and transmit or otherwise disclose the information.

An agency may not conduct or sponsor, and a person is not required to respond to a collection of information unless it displays a currently valid OMB control number. The OMB control numbers for EPA's regulations in 40 CFR are listed in 40 CFR part 9.

E. Unfunded Mandates Reform Act

Title II of the Unfunded Mandates Reform Act of 1995 (UMRA), Public Law 104–4, establishes requirements for Federal agencies to assess the effects of their regulatory actions on State, local, and tribal governments and the private sector. Under section 202 of the UMRA, EPA generally must prepare a written statement, including a cost-benefit analysis, for proposed and final rules with ''Federal mandates'' that may result in expenditures to State, local, and tribal governments, in the aggregate, or to the private sector, of $100 million or more in any one year. Before promulgating an EPA rule for which a written statement is needed, section 205 of the UMRA generally requires EPA to identify and consider a reasonable number of regulatory alternatives and adopt the least costly, most cost-effective or least burdensome alternative that achieves the objectives of the rule. The provisions of section 205 do not apply when they are inconsistent with applicable law. Moreover, section 205 allows EPA to adopt an alternative other than the least costly, most cost-effective or least burdensome alternative if the Administrator publishes with the final rule an explanation why that alternative was not adopted. Before EPA establishes any regulatory requirements that may significantly or uniquely affect small governments, including tribal governments, it must have developed under section 203 of the UMRA a small government agency plan. The plan must provide for notifying potentially affected small governments, enabling officials of affected small governments to have meaningful and timely input in the development of EPA regulatory proposals with significant Federal intergovernmental mandates, and informing, educating, and advising small governments on compliance with the regulatory requirements.

Today's final rule contains no Federal mandates (under the regulatory provisions of Title II of the UMRA) for State, local, or tribal governments or the private sector. This rule applies only to Federal agencies. Thus, today's rule is not subject to the requirements of sections 202 and 205 of the UMRA.

F. Executive Order 12898: Environmental Justice Strategy

Pursuant to Executive Order 12898 (59 FR 7629, February 16, 1994), entitled ''Federal Actions to Address Environmental Justice in Minority Populations and Low-Income Populations,'' the Agency has considered environmental justice related issues with regard to the potential impacts of this action on the environmental and health conditions in low-income, minority, and native American communities. We have complied with this mandate. However, the requirements specifically set forth by the Congress in the Waste Isolation Pilot Plant Land Withdrawal Act (Pub. L. 102–579), which prescribes EPA's role at the WIPP, did not provide authority for EPA to examine impacts in the communities in which wastes are produced, stored, and transported, and Congress did not delegate to EPA the authority to consider the issue of alternative locations for the WIPP.

During the development of the existing provisions in 40 CFR part 194, the EPA involved minority and low-income populations early in the rulemaking process. In 1993, EPA representatives met with New Mexico residents and government officials to identify the key issues that concern them, the types of information they wanted from EPA, and the best ways to communicate with different sectors of the New Mexico public. The feedback provided by this group of citizens formed the basis for EPA's WIPP communications and consultation plan. To help citizens (including a significant Hispanic population in Carlsbad and the nearby Mescalero Indian Reservation) stay abreast of EPA's WIPP-related activities, the Agency developed many informational products and services. The EPA translated into Spanish several documents regarding WIPP, including educational materials and fact sheets describing EPA's WIPP oversight role and the radioactive waste disposal standards. The EPA also established a toll-free WIPP Information Line, recorded in both English and Spanish,

providing the latest information on upcoming public meetings, publications, and other WIPP-related activities. The EPA also developed a mailing list, which includes many low-income, minority, and native American groups, to systematically provide interested parties with copies of EPA's public information documents and other materials. Even after the final rule, in 1998, EPA has continued to implement outreach services to all WIPP communities based on the needs determined during the certification.

This final action does not add or delete any certification criteria. The rule will revise the public notice process for the approval of waste characterization activities at DOE waste generator sites, which produce and store wastes destined for disposal at WIPP. Affected communities and the public in general would have the opportunity to comment on EPA's proposed waste generator site approval decision. The existing provision does not offer such opportunity. The proposed revision makes the public comment period more meaningful to all communities. The Agency also intends to continue its outreach activities to make information on waste characterization activities more accessible by using the Internet, EPA information line, and fact sheets.

G. National Technology Transfer & Advancement Act of 1995

Section 12 of the National Technology Transfer & Advancement Act of 1995 is intended to avoid ''re-inventing the wheel.'' It aims to reduce costs to the private and public sectors by requiring federal agencies to draw upon any existing, suitable technical standards used in commerce or industry. To comply with the Act, EPA must consider and use ''voluntary consensus standards,'' if available and applicable, when implementing policies and programs, unless doing so would be ''inconsistent with applicable law or otherwise impractical.'' We have determined that this regulatory action is not subject to the requirements of National Technology Transfer & Advancement Act of 1995 as this rulemaking is not setting any technical standards.

H. Executive Order 13045: Children's Health Protection

Executive Order 13045: ''Protection of Children from Environmental health Risks and Safety Risks'' (62 FR 19885, April 23, 1997) applies to any rule that: (1) is determined to be ''economically significant'' as defined under Executive Order 12866, and (2) concerns an environmental health or safety risk that EPA has reason to believe may have a disproportionate effect on children. If the regulatory action meets both criteria, the Agency must evaluate the environmental health or safety effects of the planned rule on children, and explain why the planned regulation is preferable to other potentially effective and reasonably feasible alternatives considered by the Agency.

EPA interprets Executive Order 13045 as applying only to those regulatory actions that are based on health or safety risks, such that the analysis required under section 5–501 of the Order has the potential to influence the regulation. This rule is not subject to Executive Order 13045 because it does not establish an environmental standard intended to mitigate health or safety risks.

I. Executive Order 13132: Federalism

Executive Order 13132, entitled ''Federalism'' (64 FR 43255, August 10, 1999), requires EPA to develop an accountable process to ensure ''meaningful and timely input by State and local officials in the development of regulatory policies that have federalism implications.'' ''Policies that have federalism implications'' is defined in the Executive Order to include regulations that have ''substantial direct effects on the States, on the relationship between the national government and the States, or on the distribution of power and responsibilities among the various levels of government.''

This final rule does not have federalism implications. It will not have substantial direct effects on the States, on the relationship between the national government and the States, or on the distribution of power and responsibilities among the various levels of government, as specified in Executive Order 13132. This final action revises specific portions of the Compliance Criteria in 40 CFR part 194. These criteria are applicable only to DOE (operator) and EPA (regulator) of the WIPP disposal facility. Thus, Executive Order 13132 does not apply to this rule.

J. Executive Order 13175: Consultation and Coordination With Indian Tribal Governments

Executive Order 13175, entitled ''Consultation and Coordination with Indian Tribal Governments'' (65 FR 67249, November 9, 2000), requires EPA to develop an accountable process to ensure ''meaningful and timely input by tribal officials in the development of regulatory policies that have tribal implications.'' This final rule does not have tribal implications, as specified in Executive Order 13175. This proposed action revises specific portions of the Compliance Criteria in 40 CFR part 194. The Compliance Criteria are applicable only to Federal agencies. Thus, Executive Order 13175 does not apply to this rule.

K. Executive Order 13211: Energy Effects

This final rule is not subject to Executive Order 13211, ''Actions Concerning Regulations That Significantly Affect Energy Supply, Distribution, or Use'' (66 FR 28355; May 22, 2001) because it is not a significant regulatory action under Executive Order 12866.

List of Subjects in 40 CFR Part 194

Environmental protection, Administrative practice and procedure, Nuclear materials, Radionuclides, Plutonium, Radiation Protection, Uranium, Transuranics, Waste Treatment and Disposal.

Dated: July 8, 2004.

Michael O. Leavitt,

Administrator.

■ For the reasons set out in the preamble, 40 CFR part 194 is amended as follows.

PART 194—CRITERIA FOR THE CERTIFICATION AND RE-CERTIFICATION OF THE WASTE ISOLATION PILOT PLANT'S COMPLIANCE WITH THE 40 CFR PART 191 DISPOSAL REGULATIONS

■ 1. The authority citation for part 194 continues to read as follows:

Authority: Pub. L. 102–579, 106 Stat. 4777, as amended by Pub. L. 104–201, 110 Stat. 2422; Reorganization Plan No. 3 of 1970, 35 FR 15623, Oct. 6, 1970, 5 U.S.C. app. 1; Atomic Energy Act of 1954, as amended, 42 U.S.C. 2011–2296 and 10101–10270.

■ 2. Section 194.2, is amended by adding definitions in alphabetical order for ''Acceptable knowledge'' and ''Minor alternative provision'' to read as follows:

§ 194.2 Definitions.

* * * * *

Acceptable knowledge means any information about the process used to generate waste, material inputs to the process, and the time period during which the waste was generated, as well as data resulting from the analysis of waste, conducted prior to or separate from the waste certification process authorized by EPA's Certification Decision, to show compliance with Condition 3 of the certification decision (appendix A of this part).

* * * * *

Minor alternative provision means an alternative provision to the Compliance

Criteria that only clarifies an existing regulatory provision, or does not substantively alter the existing regulatory requirements.

* * * * *

■ 3. Section 194.6 is revised to read as follows:

§ 194.6 Alternative provisions.

The Administrator may, by rule pursuant to 5 U.S.C. 553, substitute for any of the provisions of this part alternative provisions, or minor alternative provisions, in accordance with the following procedures:

(a) Alternative provisions may be substituted after:

(1) Alternative provisions have been proposed for public comment in the **Federal Register** together with information describing how the alternative provisions comport with the disposal regulations, the reasons why the existing provisions of this part appear inappropriate, and the costs, risks and benefits of compliance in accordance with the alternative provisions;

(2) A public comment period of at least 120 days has been completed and public hearings have been held in New Mexico;

(3) The public comments received have been fully considered; and

(4) A notice of final rulemaking is published in the **Federal Register.**

(b) Minor alternative provisions may be substituted after:

(1) The minor alternative provisions have been proposed for public comment in the **Federal Register** together with information describing how they comport with the disposal regulations, the reasons why the existing provisions of this part appear inappropriate, and the benefit of compliance in accordance with the minor alternative provision;

(2) A public comment period of at least 30 days has been completed for the minor alternative provisions and the public comments received have been fully considered;

(3) A notice of final rulemaking is published in the **Federal Register** for the minor alternative provisions.

■ 4. Section 194.8 is amended:

■ a. By redesignating paragraph (b) as paragraph (c);

■ b. By adding a new paragraph (b) and revising newly designated paragraph (c) to read as follows:

§ 194.8 Approval process for waste shipment from waste generator sites for disposal at the WIPP.

* * * * *

(b) *Waste characterization programs at transuranic waste sites.* The Agency will establish compliance with Condition 3 of the certification using the following process:

(1) DOE will implement waste characterization programs and processes in accordance with § 194.24(c)(4) to confirm that the total amount of each waste component that will be emplaced in the disposal system will not exceed the upper limiting value or fall below the lower limiting value described in the introductory text of § 194.24(c). Waste characterization processes will include the collection and use of acceptable knowledge; destructive and/or nondestructive techniques for identifying and measuring waste components; and the validation, control, and transmittal to the WIPP Waste Information System database of waste characterization data, in accordance with § 194.24(c)(4).

(2) The Agency will verify the compliance of waste characterization programs and processes identified in paragraph (b)(1) of this section at sites without EPA approval prior to October 14, 2004, using the following process:

(i) DOE will notify EPA by letter that a transuranic waste site is prepared to ship waste to the WIPP and has established adequate waste characterization processes and programs. DOE also will provide the relevant waste characterization program plans and documentation. EPA may request additional information from DOE.

(ii) EPA will conduct a baseline compliance inspection at the site to verify that adequate waste characterization program plans and technical procedures have been established, and that those plans and procedures are effectively implemented. The inspection will include a demonstration or test by the site of the waste characterization processes identified in paragraph (b)(1) of this section. If an inspection does not lead to approval, we will send an inspection report to DOE identifying deficiencies and place the report in the public docket described in § 194.67. More than one inspection may be necessary to resolve compliance issues.

(iii) The Agency will announce in the **Federal Register** a proposed Baseline Compliance Decision to accept the site's compliance with § 194.24(c)(4). We will place the inspection report(s) and any supporting documentation in the public docket described in § 194.67. The site inspection report supporting the proposal will describe any limitations on approved waste streams or waste characterization processes. It will also identify (through tier designations in accordance with paragraph (b)(4) of this section) what changes to the approved waste characterization processes must be reported to and approved by EPA before they can be implemented. In the notice, we will solicit public comment (for a minimum of 45 days) on the proposed Baseline Compliance Decision, including any limitations and the tier designations for future changes or expansions to the site's waste characterization program.

(iv) Our written decision regarding compliance with the requirements for waste characterization programs and processes described in paragraph (b)(1) of this section will be conveyed in a letter from the Administrator's authorized representative to DOE. EPA will not issue a compliance decision until after the end of the public comment period described in paragraph (b)(2)(iii) of this section. EPA's compliance decision will respond to significant and timely-received comments. A copy of our compliance decision will be placed in the public docket described in § 194.67. DOE will comply with any requirements identified in the compliance decision and the accompanying inspection report.

(3) Subsequent to any positive determination of compliance as described in paragraph (b)(2)(iv) of this section, the Agency intends to conduct inspections, in accordance with § 194.24(h), to confirm the continued compliance of approved waste characterization programs and processes at transuranic waste sites. EPA will make the results of these inspections available to the public in the dockets described in § 194.67.

(4) Subsequent to any positive determination of compliance as described in paragraph (b)(2)(iv) of this section, the Department must report changes or expansions to the approved waste characterization program at a site in accordance with the tier designations established in the Baseline Compliance Decision.

(i) For changes or expansions to the waste characterization program designated as ''Tier 1,'' the Department shall provide written notification to the Agency. The Department shall not ship for disposal at WIPP any waste that has been characterized using the new or revised processes, equipment, or waste streams until EPA has provided written approval of such new or revised systems.

(ii) For changes or expansions to the waste characterization program designated as ''Tier 2,'' the Department shall provide written notification to the Agency. Waste characterized using the new or revised processes, equipment, or

waste streams may be disposed at WIPP without written EPA approval.

(iii) EPA may conduct inspections in accordance with § 194.24(h) to evaluate the implementation of Tier 1 and Tier 2 changes or expansions to the waste characterization program at a site.

(iv) Waste characterization program changes or expansions that are not identified as either ''Tier 1'' or ''Tier 2'' will not require written notification by the Department to the Agency before implementation or before shipping waste for disposal at WIPP.

(5) Subsequent to any positive determination of compliance as described in paragraph (b)(2)(iii) of this section, EPA may revise the tier designations for approving changes or expansions to the waste characterization program at a site using the following process:

(i) The Agency shall announce the proposed tier changes in a letter to the Department. The letter will describe the Agency's reasons for the proposed change in tier designation(s). The letter and any supporting inspection report(s) or other documentation will be placed in the dockets described in § 194.67.

(ii) If the revised designation entails more stringent notification and approval requirements (*e.g.,* from Tier 2 to Tier 1, or from undesignated to Tier 2), the change shall become effective immediately and the site shall operate under the more stringent requirements without delay.

(iii) If the revised designated entails less stringent notification and approval requirements, (*e.g.,* from Tier 1 to Tier 2, or from Tier 2 to undesignated), EPA will solicit comments from the public for a minimum of 30 days. The site will continue to operate under the more stringent approval requirements until the public comment period is closed and EPA notifies DOE in writing of the Agency's final decision.

(6) A waste generator site that EPA approved for characterizing and disposing transuranic waste at the WIPP under this section prior to October 14, 2004, may continue characterizing and disposing such waste at the WIPP under paragraph (c) of this section until EPA has conducted a baseline compliance inspection and provided a Baseline Compliance Decision under paragraph (b)(2) of this section.

(i) Until EPA provides a Baseline Compliance Decision for such a site, EPA may approve additional transuranic waste streams for disposal at WIPP under the provisions of paragraph (c) of this section. Prior to the effective date of EPA's Baseline Compliance Decision for such a site, EPA will continue to conduct inspections of the site in accordance with § 194.24(c).

(ii) EPA shall conduct a baseline compliance inspection and issue a Baseline Compliance Decision for such previously approved sites in accordance with the provisions of paragraph (b) of this section, except that the site shall not be required to provide written notification of readiness as described in paragraph (b)(2)(i) of this section.

(c) *Waste characterization programs at waste generator sites with prior approval.* For a waste generator site that EPA approved for characterizing and disposing transuranic waste at the WIPP under this section prior to October 14, 2004, the Agency will determine compliance with the requirements for use of process knowledge and a system of controls at waste generator sites as set in this paragraph (c). Approvals for a site to characterize and dispose of transuranic waste at WIPP will proceed according to this section only until EPA has conducted a baseline compliance inspection and provided a Baseline Compliance Decision for a site under paragraph (b)(2) of this section.

(1) For each waste stream or group of waste streams at a site, the Department must:

(i) Provide information on how process knowledge will be used for waste characterization of the waste stream(s) proposed for disposal at the WIPP; and

(ii) Implement a system of controls at the site, in accordance with § 194.24(c)(4), to confirm that the total amount of each waste component that will be emplaced in the disposal system will not exceed the upper limiting value or fall below the lower limiting value described in the introductory text of § 194.24(c). The implementation of such a system of controls shall include a demonstration that the site has procedures in place for adding data to the WIPP Waste Information System (''WWIS''), and that such information can be transmitted from that site to the WWIS database; and a demonstration that measurement techniques and control methods can be implemented in accordance with § 194.24(c)(4) for the waste stream(s) proposed for disposal at the WIPP.

(2) The Agency will conduct an audit or an inspection of a Department audit for the purpose of evaluating the use of process knowledge and the implementation of a system of controls for each waste stream or group of waste streams at a waste generator site. The Agency will announce a scheduled inspection or audit by the Agency with a notice in the **Federal Register.** In that or another notice, the Agency will also solicit public comment on the relevant waste characterization program plans and Department documentation, which will be placed in the dockets described in § 194.67. A public comment period of at least 30 days will be allowed.

(3) The Agency's written decision regarding compliance with the requirements for waste characterization programs described in paragraph (b)(1) of this section for one or more waste streams from a waste generator site will be conveyed in a letter from the Administrator's authorized representative to the Department. No such compliance determination shall be granted until after the end of the public comment period described in paragraph (b)(2) of this section. A copy of the Agency's compliance determination letter will be placed in the public dockets in accordance with § 194.67. The results of any inspections or audits conducted by the Agency to evaluate the plans described in paragraph (b)(1) of this section will also be placed in the dockets described in § 194.67.

(4) Subsequent to any positive determination of compliance as described in paragraph (b)(3) of this section, the Agency intends to conduct inspections, in accordance with §§ 194.21 and 194.24(h), to confirm the continued compliance of the programs approved under paragraphs (b)(2) and (b)(3) of this section. The results of such inspections will be made available to the public through the Agency's public dockets, as described in § 194.67.

■ 5. Section 194.12 is revised to read as follows:

§ 194.12 Submission of compliance applications.

Unless otherwise specified by the Administrator or the Administrator's authorized representative, 5 copies of any compliance application(s), any accompanying materials, and any amendments thereto shall be submitted in a printed form to the Administrator's authorized representative. These paper copies are intended for the official docket in Washington, DC, as well as the four informational dockets in Albuquerque and Santa Fe, New Mexico. In addition, DOE shall submit 10 copies of the complete application in alternative format (*e.g.,* compact disk) or other approved format, as specified by the Administrator's authorized representative.

■ 6. Section 194.13 is revised to read as follows:

§ 194.13 Submission of reference materials.

Information may be included by reference into compliance

applications(s), provided that the references are clear specific and that unless, otherwise specified by the Administrator or the Administrator's authorized representative, 5 copies of reference information are submitted to the Administrator's authorized representative. These paper copies are intended for the official docket in Washington, DC, as well as the four informational dockets in Albuquerque and Santa Fe, New Mexico. Reference materials that are widely available in standard text books or reference books need not to be submitted. Whenever possible, DOE shall submit 10 copies of reference materials in alternative format (*e.g.,* compact disk) or other approved format, as specified by the Administrator's authorized representative.

■ 7. Section 194.24 is amended by revising paragraph (c)(3) to read as follows:

§ 194.24 Waste characterization.

* * * * *

(c) * * *

(3) Provide information that demonstrates that the use of acceptable knowledge to quantify components in waste for disposal conforms with the quality assurance requirements of § 194.22.

* * * * *

[FR Doc. 04–16207 Filed 7–15–04; 8:45 am]

BILLING CODE 6560–50–P

ENVIRONMENTAL PROTECTION AGENCY

40 CFR Parts 239 and 257

[FRL–7787–3]

Adequacy of Indiana Solid Waste Landfill Permit Programs Under RCRA Subtitle D

AGENCY: Environmental Protection Agency (EPA).

ACTION: Direct final rule.

SUMMARY: Under Section 4005(c)(1)(C) of the Resource Conservation and Recovery Act (RCRA), EPA can approve state permit programs for solid waste disposal facilities that receive hazardous waste from conditionally exempt small quantity generators (CESQGs). A generator is a CESQG in a calendar month if he generates no more than 100 kilograms of hazardous waste in that month. CESQGs are subject to minimal record keeping and reporting requirements under RCRA, but must satisfy three basic regulatory requirements to remain exempt from the full scope of hazardous waste regulations that apply to other generators: compliance with hazardous waste determination requirements, compliance with storage quantity limits, and compliance with applicable hazardous waste treatment and disposal regulations. Federal regulations specify that CESQG hazardous waste must be disposed of in either: a hazardous waste landfill subject to RCRA Subtitle C; a state licensed or permitted municipal solid waste landfill (MSWLF) subject to the RCRA Subtitle D regulations; or a state licensed or permitted non-municipal, non-hazardous waste disposal unit subject to the RCRA Subtitle D regulations. This document approves Indiana's regulation that requires that CESQG hazardous waste must be disposed of in either a permitted MSWLF subject to the RCRA Subtitle D regulations, or a hazardous waste facility subject to RCRA Subtitle C.

EPA is publishing this rule to approve applicable regulations in Indiana without prior proposal because we believe this action is not controversial, and we do not expect comments that oppose it. Unless we receive written comments that oppose this approval during the comment period, the decision to approve the subject regulations in Indiana will take effect as scheduled. If we receive comments that oppose this action, we will publish a document in the **Federal Register** withdrawing this rule before it takes effect, and a separate document in the proposed rules section of this **Federal Register** will serve as a proposal to approve the subject regulations for Indiana.

DATES: This direct final rule is effective on September 14, 2004, unless EPA receives relevant adverse written comment by August 16, 2004. If EPA receives such comment, it will publish a timely withdrawal of this direct final rule in the **Federal Register** and inform the public that this rule will not take effect.

ADDRESSES: Send written comments to Ms. Susan Mooney, Waste Management Branch (Mail Code: DW–8J), U.S. EPA Region 5, 77 West Jackson Boulevard, Chicago, IL 60604. Comments may also be submitted electronically to: *mooney.susan@epa.gov* or by facsimile at (312) 353–4788. Comments in electronic format should identify this specific notice. Documents pertaining to this regulatory docket can be viewed and copied during regular business hours at the EPA Region 5 office located at the address noted above.

FOR FURTHER INFORMATION CONTACT: For information on accessing documents or supporting materials related to this rule or for information on specific aspects of this rule, contact Susan Mooney, Waste Management Branch (Mail code: DW–8J), U.S. EPA Region 5, 77 West Jackson Boulevard, Chicago, IL 60604, phone (312) 886–3585, or by e-mail at *mooney.susan@epa.gov.*

SUPPLEMENTARY INFORMATION:

A. Background

Under 40 CFR 261.5, ''Special Requirements for Hazardous Waste Generated by Conditionally Exempt Small Quantity Generators,'' which was promulgated on March 24, 1986 (51 FR 10174), CESQG waste could be disposed of only in an EPA or State regulated hazardous, municipal, industrial or miscellaneous waste landfill. At that time, EPA had promulgated rules only for hazardous waste landfills and MSWLFs, not for industrial or miscellaneous waste landfills that accepted CESQG waste. On July 1, 1996, EPA promulgated criteria under its solid waste program at 40 CFR Part 257, subpart B, for industrial waste and other non-municipal, non-hazardous waste landfills that accept CESQG waste (61 FR 34252–34278). In the same notice, EPA also revised its hazardous waste program regulations at 40 CFR 261.5 (f)(3) and 261.5 (g)(3) to allow the disposal of CESQG waste in non-municipal, non-hazardous waste landfills that meet the requirements of 40 CFR Part 257, subpart B, as well as in hazardous waste landfills or MSWLFs that meet appropriate Federal regulations.

RCRA Section 4005 requires states to develop permitting programs or other systems of prior approval and conditions to ensure that solid waste disposal units that receive household hazardous waste or CESQG waste or both comply with the revised Federal criteria under parts 258 and 257, subpart B. To fulfill this need, EPA issued the State Implementation Rule on October 23, 1998, (63 FR 57026) to provide a process for approving state permitting programs for municipal solid waste landfills and for non-municipal solid waste landfills that receive CESQG waste.

On February 6, 2004, the Indiana Department of Environmental Management requested a review in accordance with RCRA Section 4005, of new Indiana regulations to determine whether the regulations are adequate to assure compliance with Federal disposal requirements for CESQG waste. Indiana regulation at 329 IAC 10–3–2 (c) requires CESQG waste to be disposed of in either a municipal solid waste

landfill permitted in accordance with 329 IAC 10 requirements or a hazardous waste landfill permitted in accordance with 329 IAC 3.1. This requirement became effective on March 30, 2004.

Indiana's regulation satisfies the EPA requirements for the safe management of CESQG wastes. Therefore, pursuant to 40 CFR Part 239, EPA has determined that Indiana's regulation is adequate for EPA approval because it prohibits the disposal of CESQG wastes in landfills that do not meet relevant Federal requirements.

B. Decision

After reviewing the relevant regulation for the State of Indiana (329 IAC 10–3–2 (c)), and finding that it is equivalent to, or more stringent than, the federal regulations at 40 CFR 261.5(f)(3) and (g)(3), EPA is granting Indiana a final determination of adequacy for its regulation pursuant to RCRA section 4005(c)(1)(C).

C. Statutory and Executive Order Reviews

This rule approves state solid waste requirements pursuant to RCRA Section 4005 and imposes no Federal requirements (*see* **SUPPLEMENTARY INFORMATION,** above). Therefore, this rule complies with applicable executive orders and statutory provisions as follows: *1. Executive Order 12866: Regulatory Planning Review*—The Office of Management and Budget has exempted this rule from its review under Executive Order (EO) 12866; *2. Paperwork Reduction Act*—This rule does not impose an information collection burden under the Paperwork Reduction Act; *3. Regulatory Flexibility Act*—After considering the economic impacts of today's rule on small entities under the Regulatory Flexibility Act, I certify that this rule will not have a significant economic impact on a substantial number of small entities; *4. Unfunded Mandates Reform Act*—Because this rule approves pre-existing requirements under state law and does not impose any additional enforceable duty beyond that required by state law, this rule does not contain any unfunded mandate, or significantly or uniquely affect small governments, as described in the Unfunded Mandates Act; *5. Executive Order 13132: Federalism*—EO 13132 does not apply to this rule because this rule will not have federalism implications (*i.e.,* there are no substantial direct effects on states, on the relationship between the national government and states, or on the distribution of power and responsibilities between federal and state governments); *6. Executive Order 13175: Consultation and Coordination with Indian Tribal Governments*—EO 13175 does not apply to this rule because this rule will not have tribal implications (*i.e.,* there are no substantial direct effects on one or more Indian tribes, on the relationship between the federal government and Indian tribes, or on the distribution of power and responsibilities between the federal government and Indian tribes); *7. Executive Order 13045: Protection of Children from Environmental Health & Safety Risks*—This rule is not subject to EO 13045 because this rule is not economically significant and is not based on health or safety risks; *8. Executive Order 13211: Actions that Significantly Affect Energy Supply, Distribution, or Use*—This rule is not subject to EO 13211 because this rulemaking is not a significant regulatory action as defined in EO 12866; *9. National Technology Transfer Advancement Act*—EPA approves state programs so long as the state programs meet the criteria delineated in RCRA. It would be inconsistent with applicable law for EPA, in its review of a state program, to require the use of any particular voluntary consensus standard in place of another standard that meets RCRA requirements. Thus, Section 12(d) of the National Technology Transfer and Advancement Act does not apply to this rule; *10. Congressional Review Act*—EPA will submit a report containing this rule and other information required by the Congressional Review Act (5 U.S.C. 801 *et seq.*) to the U.S. Senate, the U. S. House of Representatives, and the Comptroller General of the United States prior to publication in the **Federal Register**. This direct final rule is not a ''major rule'' as defined by 5 U.S.C. 804(2). This direct final rule will be effective September 14, 2004.

List of Subjects in 40 CFR Part 257

Municipal solid waste, hazardous waste, landfills, conditionally exempt small quantity generator (CESQG).

Authority: This document is issued under the authority of Sections 2002 and 4005 of the Solid Waste Disposal Act, 42 U.S.C. 6912 and 6945.

Dated: June 16, 2004.

Bharat Mathur,

Acting Regional Administrator, US EPA, Region 5.

[FR Doc. 04–16204 Filed 7–15–04; 8:45 am]

BILLING CODE 6560–50–P

DEPARTMENT OF HOMELAND SECURITY

Federal Emergency Management Agency

44 CFR Part 64

[Docket No. FEMA–7837]

Suspension of Community Eligibility

AGENCY: Federal Emergency Management Agency, Emergency Preparedness and Response Directorate, Department of Homeland Security.

ACTION: Final rule.

SUMMARY: This rule identifies communities, where the sale of flood insurance has been authorized under the National Flood Insurance Program (NFIP), that are suspended on the effective dates listed within this rule because of noncompliance with the floodplain management requirements of the program. If the Federal Emergency Management Agency (FEMA) receives documentation that the community has adopted the required floodplain management measures prior to the effective suspension date given in this rule, the suspension will be withdrawn by publication in the **Federal Register**.

DATES: The effective date of each community's suspension is the third date (''Susp.'') listed in the third column of the following tables.

ADDRESSES: If you wish to determine whether a particular community was suspended on the suspension date, contact the appropriate FEMA Regional Office or the NFIP servicing contractor.

FOR FURTHER INFORMATION CONTACT: Mike Grimm, Mitigation Division, 500 C Street, SW., Room 412, Washington, DC 20472, (202) 646–2878.

SUPPLEMENTARY INFORMATION: The NFIP enables property owners to purchase flood insurance which is generally not otherwise available. In return, communities agree to adopt and administer local floodplain management aimed at protecting lives and new construction from future flooding. Section 1315 of the National Flood Insurance Act of 1968, as amended, 42 U.S.C. 4022, prohibits flood insurance coverage as authorized under the National Flood Insurance Program, 42 U.S.C. 4001 *et seq.*; unless an appropriate public body adopts adequate floodplain management measures with effective enforcement measures. The communities listed in this document no longer meet that statutory requirement for compliance with program regulations, 44 CFR part 59 *et seq.* Accordingly, the communities

will be suspended on the effective date in the third column. As of that date, flood insurance will no longer be available in the community. However, some of these communities may adopt and submit the required documentation of legally enforceable floodplain management measures after this rule is published but prior to the actual suspension date. These communities will not be suspended and will continue their eligibility for the sale of insurance. A notice withdrawing the suspension of the communities will be published in the **Federal Register**.

In addition, the Federal Emergency Management Agency has identified the special flood hazard areas in these communities by publishing a Flood Insurance Rate Map (FIRM). The date of the FIRM if one has been published, is indicated in the fourth column of the table. No direct Federal financial assistance (except assistance pursuant to the Robert T. Stafford Disaster Relief and Emergency Assistance Act not in connection with a flood) may legally be provided for construction or acquisition of buildings in the identified special flood hazard area of communities not participating in the NFIP and identified for more than a year, on the Federal Emergency Management Agency's initial flood insurance map of the community as having flood-prone areas (section 202(a) of the Flood Disaster Protection Act of 1973, 42 U.S.C. 4106(a), as amended). This prohibition against certain types of Federal assistance becomes effective for the communities listed on the date shown in the last column. The Administrator finds that notice and public comment under 5 U.S.C. 553(b) are impracticable and unnecessary because communities listed in this final rule have been adequately notified.

Each community receives a 6-month, 90-day, and 30-day notification addressed to the Chief Executive Officer that the community will be suspended unless the required floodplain management measures are met prior to the effective suspension date. Since these notifications have been made, this final rule may take effect within less than 30 days.

National Environmental Policy Act. This rule is categorically excluded from the requirements of 44 CFR Part 10, Environmental Considerations. No environmental impact assessment has been prepared.

Regulatory Flexibility Act. The Administrator has determined that this rule is exempt from the requirements of the Regulatory Flexibility Act because the National Flood Insurance Act of 1968, as amended, 42 U.S.C. 4022, prohibits flood insurance coverage unless an appropriate public body adopts adequate floodplain management measures with effective enforcement measures. The communities listed no longer comply with the statutory requirements, and after the effective date, flood insurance will no longer be available in the communities unless they take remedial action.

Regulatory Classification. This final rule is not a significant regulatory action under the criteria of section 3(f) of Executive Order 12866 of September 30, 1993, Regulatory Planning and Review, 58 FR 51735.

Paperwork Reduction Act. This rule does not involve any collection of information for purposes of the Paperwork Reduction Act, 44 U.S.C. 3501 *et seq.*

Executive Order 12612, Federalism. This rule involves no policies that have federalism implications under Executive Order 12612, Federalism, October 26, 1987, 3 CFR, 1987 Comp.; p. 252.

Executive Order 12778, Civil Justice Reform. This rule meets the applicable standards of section 2(b)(2) of Executive Order 12778, October 25, 1991, 56 FR 55195, 3 CFR, 1991 Comp.; p. 309.

List of Subjects in 44 CFR Part 64

Flood insurance, Floodplains.

■ Accordingly, 44 CFR part 64 is amended as follows:

PART 64—[AMENDED]

■ 1. The authority citation for Part 64 continues to read as follows:

Authority: 42 U.S.C. 4001 *et seq.*; Reorganization Plan No. 3 of 1978, 3 CFR, 1978 Comp.; p. 329; E.O. 12127, 44 FR 19367, 3 CFR, 1979 Comp.; p. 376.

§ 64.6 [Amended]

■ 2. The tables published under the authority of § 64.6 are amended as follows:

State and location	Community No.	Effective date authorization/cancellation of sale of flood insurance in community	Current effective map date	Date certain Federal assistance no longer available in special flood hazard areas
Region V				
Wisconsin: New Richmond, City of, St. Croix County.	550384	June 5, 1974, Emerg.; July 16, 2004, Reg.; July 16, 2004, Susp.	7/16/04	7/16/04

Code for reading third column: Emerg.—Emergency; Reg.—Regular; Susp.—Suspension.

Dated: June 17, 2004.

Archibald C. Reid, III,

Acting Mitigation Division Director, Emergency Preparedness and Response Directorate.

[FR Doc. 04–16195 Filed 7–15–04; 8:45 am]

BILLING CODE 9110–12–P

DEPARTMENT OF HEALTH AND HUMAN SERVICES

Office of the Secretary

45 CFR Parts 74, 87, 92, and 96

RIN 0991–AB34

Participation in Department of Health and Human Services Programs by Religious Organizations; Providing for Equal Treatment of All Department of Health and Human Services Program Participants

AGENCY: Office of the Secretary, Department of Health and Human Services (HHS).

ACTION: Final rule.

SUMMARY: On March 9, 2004, the Department of Health and Human Services (HHS) published a Notice of Proposed Rulemaking (NPRM) to implement executive branch policy that, within the framework of constitutional church-state guidelines, religiously affiliated (or ''faith-based'') organizations should be able to compete on an equal footing with other organizations for the Department's funding without impairing the religious character of such organizations. It creates a new regulation on Equal Treatment for Faith-Based Organizations, and revises Department regulations to remove barriers to the participation of faith-based organizations in Department programs and to ensure that these programs are implemented in a manner consistent with applicable statutes and the requirements of the Constitution, including the Establishment, Free Exercise, and Free Speech Clauses of the First Amendment. The Secretary requested comments on the NPRM and gave 60 days for individuals to submit their written comments to the Department. The Secretary has considered the comments received during the open comment period and is issuing the final regulation in light of those comments.

EFFECTIVE DATE: This rule is effective August 16, 2004.

FOR FURTHER INFORMATION CONTACT: Bobby Polito, Director, Department of Health and Human Services Center for Faith-Based and Community Initiatives, 200 Independence Ave., Room 120F, Washington, DC 20201, telephone (202) 358–3595.

SUPPLEMENTARY INFORMATION: On March 9, 2004, HHS published a Notice of Proposed Rulemaking (NPRM) to implement executive branch policy (69 FR 10951). We provided a 60-day comment period that ended on May 10, 2004. We offered the public the opportunity to submit comments by surface mail, E-mail, or electronically via our Web site.

Background

This final rule is part of the Department's effort to fulfill its responsibilities under two Executive Orders issued by President Bush. The first of these Orders, Executive Order 13198 of January 29, 2001, published in the **Federal Register** on January 31, 2001 (66 FR 8497), created Centers for Faith-Based and Community Initiatives in five cabinet departments—Housing and Urban Development, Health and Human Services, Education, Labor, and Justice—and directed these Centers to identify and eliminate regulatory, contracting, and other programmatic obstacles to the equal participation of faith-based and community organizations in the provision of social services by their Departments. The second of these Executive Orders, Executive Order 13279 of December 12, 2002, published in the **Federal Register** on December 16, 2002 (67 FR 77141), charged executive branch agencies to give equal treatment to faith-based and community groups that apply for funds to meet social needs in America's communities. President Bush thereby called for an end to discrimination against faith-based organizations and ordered implementation of these policies throughout the executive branch in a manner consistent with the First Amendment to the United States Constitution. He further directed that faith-based organizations be allowed to retain their religious autonomy over their internal governance and composition of boards, and over their display of religious art, icons, scriptures, or other religious symbols, when participating in government funded programs. The Administration believes that there should be an equal opportunity for all organizations—both religious and nonreligious—to participate as partners in Federal programs.

Summary Description of Regulatory Provisions

The following is a summary of the regulatory provisions included in this final rule which creates a new Part 87 Equal Treatment for Faith-based Organizations, and revises the Department's uniform administrative requirements at 45 CFR Parts 74, 92, and 96 to incorporate the requirements of Part 87. The final rule is applicable only to those grants, agreements, and other financial assistance covered by such requirements.

The rule has the following specific objectives:

(1) *Participation by faith-based organizations in Department of Health and Human Services programs.* The rule provides that organizations are eligible to participate in Department programs without regard to their religious character or affiliation, and that organizations may not be excluded from the competition for Department grant funds simply because they are religious. Specifically, religious organizations are eligible to compete for funding on the same basis, and under the same eligibility requirements, as other organizations. The Department, as well as State and local governments administering funds under Department programs or intermediate organizations with the same duties as a governmental entity under this part, are prohibited from discriminating for or against organizations on the basis of religious character or affiliation in the selection of service providers. Nothing in the rule, however, precludes those administering Department-funded programs from accommodating religious organizations in a manner consistent with the Establishment Clause.

(2) *Inherently religious activities.* The rule describes the requirements that are applicable to all recipient organizations regarding the use of Department grant funds for inherently religious activities. Specifically, a participating organization may not use direct financial assistance from the Department, as well as from State and local governments or intermediate organizations administering funds under Department programs, to support inherently religious activities, such as worship, religious instruction, or proselytization. If the organization engages in such activities, it must offer them separately, in time or location, from the programs or services funded with direct Department assistance, and participation must be voluntary for the beneficiaries of the Department-funded programs or services. This requirement ensures that direct financial assistance from the Department to participating organizations is not used to support inherently religious activities. Such assistance may not be used, for example, to conduct worship services, prayer

meetings, or any other activity that is inherently religious. The rule clarifies that this restriction does not mean that an organization that receives Department grant funds may not engage in inherently religious activities, but only that such an organization may not fund these activities with direct financial assistance from the Department.

(3) *Independence of faith-based organizations.* The rule makes clear that a religious organization that participates in Department programs retains its independence and may continue to carry out its mission, including the definition, practice, and expression of its religious beliefs, provided that it does not use direct financial assistance from the Department to support any inherently religious activities, such as worship, religious instruction, or proselytization. Among other things, a faith-based organization may use space in its facilities to provide Department-funded services without removing religious art, icons, scriptures, or other religious symbols. In addition, a religious organization that receives financial assistance from the Department retains its authority over its internal governance and it may retain religious terms in its organization's name, select its board members on a religious basis, and include religious references in its organization's mission statements and other governing documents in accordance with all program requirements, statutes, and other applicable requirements governing the conduct of Department-funded activities.

(4) *Employment practices.* The rule makes clear the Department's view that religious organizations do not forfeit their exemption from the Federal prohibition on employment discrimination on the basis of religion set forth in § 702(a) of the Civil Rights Act of 1964. Some Department programs, however, have independent statutory nondiscrimination requirements related to religious discrimination. Therefore, organizations should consult with the appropriate grant program office.

(5) *Nondiscrimination in providing assistance.* The rule provides that an organization that receives direct financial assistance from the Department, as well as from State and local governments or intermediate organizations administering funds under Department programs may not, in providing program assistance supported by such funding, discriminate against a program beneficiary or prospective program beneficiary on the basis of religion or religious belief.

(6) *Assurance requirements.* The final rule establishes that all organizations that participate in Department programs, including organizations with religious character or affiliations, are required to carry out eligible activities in accordance with all program requirements and other applicable requirements governing the conduct of Department-funded activities, including those prohibiting the use of direct financial assistance from the Department to support inherently religious activities. The Department will not require only religious organizations to provide assurances that they will not use monies or property for inherently religious activities. Any restrictions on the use of financial assistance shall apply equally to religious and non-religious organizations. Thus, the Department, through this regulation, intends to create a ''level playing field.''

Discussion of Regulatory Provisions and Response to Public Comments

The Department received comments on the proposed rule from four commenters, three of which were public interest or civil or religious liberties organizations, and one of which was a State Department of Human Services. Some of the comments were generally supportive of the proposed rule; others were critical. The following is a summary of the comments and the Department's responses.

I. Definition of ''Faith-Based Organization''

One commenter noted that the term ''faith-based'' is not defined and requested that a comprehensive definition of a ''faith-based'' entity be included in the final regulation consistent with the Temporary Assistance for Needy Families (TANF) and Substance Abuse and Mental Health Services Administration (SAMHSA) Charitable Choice regulations. This commenter also suggested that the definition include an explanation as to whether the terms ''religious organization'' and ''faith-based organization'' are used interchangeably.

Throughout the proposed rule, we used the term ''religious organization'' and the term ''faith-based organization'' interchangeably. As we noted in the preamble of the SAMHSA charitable choice rule, however, neither the U.S. Constitution nor the relevant Supreme Court precedents contain a comprehensive definition of religion or a religious organization that must be applied to this rule. See 68 FR 56431 (Sept. 30, 2003). Rather, an extensive body of judicial precedent has established guidelines advising States and religious organizations on how to abide by the Establishment and Free Exercise Clauses of the First Amendment to the United States Constitution. The Department does not believe it is necessary to further define the term ''faith-based'' in the rule.

II. Religious Activities

A number of comments addressed the extent to which religious organizations may receive and use public funds, and whether and how groups that are ''pervasively sectarian'' may use such funds under the law. One commenter expressed concern that the rule allows public funds to be given to ''pervasively sectarian'' organizations. One commenter asked for clarification regarding the mandate that any religious activity must be separate and apart from the provision of HHS services. This commenter believed the requirement that ''inherently religious'' activities must be offered ''separately, in time or location'' from government-funded services fails to meet current constitutional standards governing aid to religious institutions. Further, a commenter stated that the rule improperly allows religious art, icons, scriptures, and other symbols to be displayed in an area where HHS-funded services are delivered.

One comment commended the Department for emphasizing that secular as well as religious organizations are subject to the ban on using direct government funds to underwrite inherently religious activities and for stating clearly that governments using Department funds may not apply more extensive requirements to religious organizations than to their secular counterparts, specifically referring to §§ 87.1(e) and 87.2(e).

In addition, several comments supported the mandate in the regulation that governments that use Department grant funds may not discriminate either for or against religious organizations and that religious organizations seeking support should not be discriminated against either because of their religious character or because of a religious affiliation.

The Constitution does not require the Department to assess the overall religiousness of an organization and deny financial assistance to organizations that are ''pervasively sectarian.'' Rather, religious (and other) organizations that receive direct funding from the Department may not use such support for inherently religious activities and they must ensure that these activities are separate in time or location from services directly funded by the Department and that

participation in such activities by program beneficiaries is voluntary. Furthermore, under the rule, such religious organizations receiving direct funding are prohibited from discriminating for or against program beneficiaries on the basis of religion or religious belief and participating organizations that violate these requirements are subject to applicable sanctions and penalties. The rule would thus ensure that direct funding is not used for inherently religious activities, as required by current precedent.

Moreover, the Supreme Court's ''pervasively sectarian'' doctrine no longer enjoys the support of a majority of the Court. Four Justices expressly abandoned the ''pervasively sectarian'' doctrine in *Mitchell* v. *Helms* and Justice O'Connor's opinion in that case, joined by Justice Breyer, set forth reasoning that is inconsistent with its underlying premises. 530 U.S. 793, 825–829, 857–858 (2000) (plurality opinion) (O'Connor, J., concurring in judgment) (requiring proof of ''actual diversion of public support to religious uses''). Thus, six members of the Court have rejected the view that aid provided to religious institutions will invariably advance the institutions' religious purposes that is the foundation of the ''pervasively sectarian'' doctrine. The Department therefore believes that under current precedent, the Department may fund programs of all organizations, without regard to religion and free of criteria that require the program to abandon its religious expression or character.

Neither does current Supreme Court precedent require or support the view that government must exclude from its programs those organizations that convey religious messages or advance religion with their own funds. Where a religious organization receives direct government assistance, any inherently religious activities that the organization offers must simply be offered separately, in time or location, from the activities supported by direct government funding. The Supreme Court has held that the Constitution forbids the use of direct government funds for inherently religious activities, but the Court has rejected the presumption that religious organizations will inevitably divert such funds and use them for their own religious purposes.

As to the comment about religious artwork, a number of Federal statutes affirm the principle embodied in this rule. *See, e.g.*, 42 U.S.C. § 290kk–1(d)(2)(B). Moreover, for no other program participants do Department regulations prescribe the types of artwork and symbols that may be placed within the structures or rooms in which Department-funded services are provided. In addition, a prohibition on the use of religious icons would make it more difficult for many faith-based organizations to participate in Department programs than for other organizations by forcing them to procure additional space. It would thus be an inappropriate and excessive restriction, typical of the types of regulatory barriers that this final rule seeks to eliminate. Consistent with constitutional church-state guidelines, a faith-based organization that participates in Department programs will retain its independence and may continue to carry out its mission, provided that it does not use direct Department funds to support any inherently religious activities. Accordingly, this final rule continues to provide that faith-based organizations may use space in their facilities to provide Department-funded services, without removing religious art, icons, scriptures, or other religious symbols.

One commenter urged that a clear statement be made as to the constitutional consequences of indirect as opposed to direct funding.

As used in this final rule, the term ''direct funds'' refers to direct funding within the meaning of the Establishment Clause of the First Amendment. For example, under a direct funding method, the government or an intermediate organization with the same duties as a governmental entity may purchase the needed services straight from the provider. Direct Federal funds may not be used for inherently religious activities. Faith-based organizations that receive direct Federal funds must take steps to separate, in time or location, their inherently religious activities from the federally funded services they offer. In addition, any participation by a program beneficiary in such religious activities must be voluntary and understood to be voluntary.

On the other hand, these restrictions on inherently religious activities do not apply where Federal funds are indirectly provided to religious organizations (for example, as a result of a genuine and independent private choice of a beneficiary through a voucher, certificate, coupon, or similar mechanism). Under indirect programs, religious organizations that receive Federal funds to provide services as a result of a beneficiary's genuine and independent private choice need not separate, in time or location, their inherently religious activities from the federally funded services they provide, on the condition that they otherwise satisfy the requirements of the program.

The Supreme Court has consistently held that governments may fund programs that place the benefit in the hands of individuals, who in turn have the freedom to choose the provider to which they take their benefit and spend it, whether that institution is public or private, religious or nonreligious. Therefore, any consequential aid to religion having its origin in such a program is the result of the beneficiary's own choice. *See, e.g., Zelman* v. *Simmons-Harris,* 536 U.S. 639, 652 (2002).

III. Employment Laws

Several commenters maintained that longstanding principles of constitutional law prohibit the government from funding employee positions that are filled based on discriminatory criteria. They believed the rule improperly extends the Title VII exemption, under which religious organizations are exempt from the general Title VII prohibition against religious discrimination in employment, to religious organizations participating in programs directly funded by HHS.

We do not agree that these comments accurately portray the law.

In 1972, Congress broadened § 702(a) of the Civil Rights Act to exempt religious organizations from the religious nondiscrimination provisions of Title VII, regardless of the nature of the job at issue. The broader, amended provision was unanimously upheld by the Supreme Court in 1987 and, absent a specific statutory repeal, remains applicable even when religious organizations are delivering federally funded social services. Thus, although § 702(a) of the Civil Rights Act of 1964 is permissive—it does not require religious staffing—religious organizations may consider their faith in making employment decisions without running afoul of Title VII. The effect of the explicit preservation of the Title VII exemption is no different from the rule that applies in other programs that are simply silent on the question of the applicability of Title VII in the funding context, and there are many such programs.

The Department further disagrees with objections to the rule's recognition that a religious organization does not forfeit its Title VII exemption when administering Department-funded services. As an initial matter, applicable statutory nondiscrimination requirements are not altered by this rule. Congress establishes the conditions under which religious organizations are exempt from Title VII; this rule simply recognizes that these requirements, including their limitations, are fully

applicable to federally funded organizations unless Congress says otherwise.

As to the suggestion that the Constitution restricts the government from providing funding for social services to religious organizations that consider faith in hiring, that view does not accurately represent the law. As noted above, the employment decisions of organizations that receive extensive public funding are not attributable to the State, and it has been settled for more than 100 years that the Establishment Clause does not bar the provision of direct Federal grants to organizations that are controlled and operated exclusively by members of a single faith. See *Bradfield* v. *Roberts,* 175 U.S. 291 (1899); see also *Bowen* v. *Kendrick,* 487 U.S. 589, 609 (1988). Finally, the Department notes that allowing religious groups to consider faith in hiring when they receive government funds is much like allowing a federally funded environmental organization to hire those who share its views on protecting the environment—both groups are allowed to consider ideology and mission, which improves their effectiveness and preserves their integrity. Thus, the Department declines to amend the final rule to require religious organizations to forfeit their Title VII rights.

One commenter believed the rule fails to make clear that program participants must comply with Federal statutory provisions requiring grantees not to discriminate in employment hiring practices. This commenter suggested that the rule be amended to make clear to grantees that they must comply with statutory requirements that prohibit employment discrimination on the basis of religion in HHS-funded programs that contain such statutory provisions.

The Department understands that grantees need to be aware of such provisions and believes such information is most easily obtained and best explained by the appropriate Department offices. The purpose of this rulemaking is to eliminate undue administrative barriers that the Department has imposed to the participation of faith-based organizations in Department programs; of itself, the rule does not alter existing statutory requirements, which apply to Department programs to the same extent that they applied prior to this rule.

IV. Interaction With State and Local Law

One commenter believed the rule disregards local laws pertaining to diversity requirements for governing boards and they proposed that the rule be modified to make clear that it does not preempt State and local diversity requirements that pertain to board membership of organizations operating publicly funded programs. Several commenters felt that the rule fails to preserve State and local laws that relate to discrimination in employment. Another commenter observed that some States do not allow discrimination in hiring practices based on sexual orientation and gender identity, although Federal law contains no such prohibition. To avoid confusion, the commenters believed, the rule should be clear that State and local governments will continue to be allowed to enforce provisions that restrict or prohibit the use of funds by religious organizations who participate in publicly funded programs.

The commenters requested that additional language be added to Part 87 to clarify that a religious organization using a Department program or receiving Department grant dollars is subject to all applicable Federal, State, and local civil rights laws.

The requirements that govern funding under the Department programs at issue in these regulations do not directly address preemption of State or local laws. Federal funds, however, carry Federal requirements. No organization is required to apply for funding under these programs, but organizations that apply and are selected for funding must comply with the Federal requirements applicable to the program funds.

Under this rule, a religious organization's exemption from the Federal prohibition on employment discrimination on the basis of religion, set forth in § 702(a) of the Civil Rights Act of 1964 (42 U.S.C. 2000e–1), is not forfeited when the religious organization receives direct or indirect financial assistance from the Department, although a Department program may contain independent statutory provisions governing employment. Thus, this rule will apply when a State or local government uses Federal funds to provide services under a Department program and the religious organization will remain free to make employment choices based on religion under Title VII. Additionally, if a State or local government contributes its own funds to the Federal funds and the funds are commingled, the provisions of this section shall apply to all of the commingled funds in the same manner, and to the same extent, as the provisions apply to the Federal funds.

V. State Action

One commenter suggested that the rule transforms organizations that are permitted to consider religion in employment decisions into state actors.

The Department disagrees with this comment. The receipt of government funds does not convert the employment decisions of private institutions into ''state action'' that is subject to constitutional restrictions regarding religious discrimination in employment. See *Rendell-Baker* v. *Kohn,* 457 U.S. 830 (1982) (holding that the employment decisions of a private school that receives more than 90% of its funding from the State are not state action).

VI. Effect on State and Local Funds of Commingling of Funds

One commenter requested that a statement be made that because of the use of Federal funds, Federal power preempts State and local procurement restrictions on religious staffing when the funds involved are Department funds or commingled State or local funds. Another commenter believed that the regulation impermissibly forces States to waive enforcement of state constitutional, statutory, and regulatory requirements that may be more restrictive than the applicable Federal requirements. Additionally, one commenter objected to the language in §§ 87.1(h) and 87.2(h) that applies the rules to State and local funds when these funds are commingled with Federal funds, regardless of whether State or local funds are required as a condition for the receipt of Federal funds. One commenter noted that State or local governments cannot draw down particular Department grant funds without contributing matching funds and suggested that State or local matching funds should be subject to the rule whether or not the matching funds are commingled with the Department's funds because they are inherently a part of the Department-funded program.

We disagree that the rule forces waiver or directly addresses preemption of State and local laws. When State and local governments, or other grantees, supplement the non-Federal share of the award, then the grantees have the option to commingle such supplemental funds with Federal funds or to separate them (*i.e.,* where no Federal requirement mandates commingling). Federal rules apply if they choose to commingle their own supplemental funds with Federal funds. We agree with the last commenter and have edited the final rule accordingly. In Department programs Federal rules ordinarily apply to State ''matching'' funds or ''cost sharing'' funds which are required as part of the grant award. Therefore, these Federal regulations remain applicable to State, local, or other grantee matching

funds that are required as part of the grant award.

VII. Assurances of Compliance and Oversight

One commenter suggested that § 87.2 include a requirement that State and local governments that receive Department funds in the form of formula or block grants must provide to the Department some kind of explicit assurance that they will follow, or evidence that they have followed, the rule.

The Department declines to adopt this suggestion. It is a condition of any grant to comply with existing rules and each grantee must sign assurances certifying that the grantee will comply with the various laws applicable to the receipt of Federal grants. The Department believes that those signed assurances, plus existing compliance and auditing standards, provide appropriate oversight.

Another commenter stated that the rule must provide safeguards to reduce potential constitutional violations and provide adequate oversight and monitoring of grantees so that, when government grant funds are given to faith-based institutions, additional safeguards adequate to prevent religious use of the funds are in place. This commenter did not feel that the rule outlines any oversight mechanisms to prevent the religious use of government funds and expressed concern that a pervasively sectarian entity could intermingle government funds and funds for ''inherently religious activities'' with no way to account for the expenditure of government funds.

The Department has not revised the rule in response to these comments. The Department has a responsibility to monitor all program participants to ensure that Department grant funds are used in accordance with the particular Department program and any government-wide requirements. Inappropriate use of grant funds or failure to comply with requirements is not a possibility that arises only when program participants are faith-based organizations. Failure of any organization receiving Federal funds to ensure that such funding is not used for prohibited purposes will subject the organization to the imposition of sanctions or penalties. All Department program participants must carefully manage their various sources of Federal funds and abide by OMB cost accounting circulars, where applicable, or other cost accounting method that may be specified in individual program regulations. With respect to discretionary grants, the Department is authorized to conduct any audits or reviews that are warranted, irrespective of the amount of Federal funds expended by the grantee annually, in order to ensure compliance with program requirements, including the restriction against direct funding of inherently religious activities. See 45 CFR 74.26, 74.51, 74.53, 92.26, 92.40, 92.42. The Department may determine that such audits or reviews are warranted based upon any information received by the agency that raises an issue concerning the propriety of expenditures. With respect to block grants, the Department also has broad oversight authority to ensure compliance with program requirements including the restriction against direct funding of inherently religious activities. See 45 CFR Part 96, Subparts C and E, as well as specific authority provided under each block grant statute. In sum, the Department believes that signed assurances applicable to all grantees, plus existing compliance and auditing standards, provide the needed oversight and ensure that the States, localities and religious organizations are implementing the rule properly and that all beneficiaries' rights are being upheld as required.

VIII. Rights of Beneficiaries

Several commenters stated that the rule fails to adequately protect the rights of beneficiaries in direct funding programs. They believed the rule should outline procedures for beneficiaries to file complaints regarding their treatment and access to services from organizations that fail to respect the rights of beneficiaries. The commenters argued that to meet current constitutional standards regarding beneficiaries' participation in religious activities, beneficiaries should receive a notice of their rights and how they may address any grievances. One of these commenters also felt that language prohibiting discrimination based on religion or religious beliefs should be strengthened to ensure that Federal monies cannot be used to discriminate on the basis of sexual orientation or gender identity. This commenter suggested that the rule fails to provide the necessary constitutional safeguards to protect the religious liberty of program beneficiaries and felt that the rule does not provide meaningful ways in which beneficiaries can secure their rights. The commenter also believed that the rule fails to provide any protections for beneficiaries of indirect aid programs and expressed concern that there is no requirement that a beneficiary be given notice of her rights in redeeming publicly funded, Department-approved vouchers. The commenter felt that the rule should prohibit the participation of organizations in voucherized programs that have a policy of discriminating in the admittance of a beneficiary to a program or in the provision of services.

One commenter expressed concern that the rule contains no requirements pertaining to notice, referral and provision of alternative services for beneficiaries who object to the religious character of a Department participating organization. This commenter felt the rule should be modified to require that a non-religious alternative must be made available to beneficiaries who object to a religious participating organization. The commenter also believed that the rule should require that notice of the availability of an alternative provider be given to all beneficiaries at the outset of their receipt of services.

The Department declines to adopt these recommendations. It believes that the existing language prohibiting organizations receiving direct funds from discriminating against program beneficiaries on the basis of ''religion or religious belief'' is sufficiently explicit. In addition, the rule provides that religious organizations may not use direct Federal funding from the Department for inherently religious activities and that any such activities must be offered separately, in time or location, and must be voluntary for program beneficiaries. These requirements further protect the rights of program beneficiaries, for whom traditional channels of airing grievances are generally available. While some Department programs (*e.g.*, SAMHSA and TANF Charitable Choice) contain statutory requirements of notice and referral and provision of alternative services, we have declined to adopt such requirements by regulation for all Department programs.

As for indirect programs, the religious freedom of beneficiaries in an indirect funding program is protected by the guarantee of genuine and independent private choice. Officials administering public funding under an indirect funding program have an obligation to ensure that everyone who is eligible receives services from some provider, and no client may be required to receive services from a provider to which the client has a religious objection. In other words, vouchers and services indirectly funded by the government must be available to all clients regardless of their religious belief, and those who object to a religious provider have a right to services from some alternative provider.

As to the comment about sexual orientation and gender identity, although Federal law prohibits persons from being excluded from participation in Department services or subjected to discrimination based on race, color, national origin, sex, age, or disability, it does not prohibit discrimination on the basis of sexual orientation or gender identity. We decline to impose such additional requirements by this rule.

One commenter requested clarification of the statements in the regulation that religious organizations which accept Department grant funds comply with ''all program requirements and other applicable requirements governing the conduct of Department-funded activities'' in §§ 87.1(c) and (e) and §§ 87.2(c) and (e). The commenter expressed concern that this statement would subordinate the protections for the religious character of the grantee provided for in this regulation to individual Department program requirements.

Some Department programs have independent statutory requirements that must be met, and thus organizations that receive grant funds distributed under such a program must comply with these Federal requirements. Absent such requirements, we reiterate that under this rule, when a religious organization participates in Department-funded programs, it retains its independence and may continue to carry out its mission. This may include the definition, practice, and expression of its religious beliefs, provided that it does not use direct financial assistance from the Department to support any inherently religious activities, such as worship, religious instruction, or proselytization. Organizations that have further questions should consult with the appropriate grant office.

One commenter requested that the rule be extended to cover non-financial assistance such as technical assistance.

This regulation is designed to amend the Department's uniform administrative requirements at 45 CFR Parts 74, 92, and 96 and is applicable only to those grants, agreements, and any other assistance covered by such requirements. Thus, such other assistance offered by the Department, such as technical assistance provided by the Department, is not appropriately addressed by this rule. However, when an organization receives a grant from the Department to provide technical assistance on behalf of the Department, the provisions of this rule apply just as they apply to other grants.

Another commenter noted that this regulation does not address the provision of alternative services as required by the Charitable Choice regulations and requested clarification as to whether there is to be an additional burden on the States regarding provision of these services.

At this time, we decline to incorporate alternative service requirements into this rule, because this rule is a general rule and does not address other programs already in place. It is designed primarily to remove barriers to participation in Department funding opportunities by faith-based organizations and it does not alter other program-specific regulations.

IX. Interaction With Charitable Choice

One commenter suggested that the rule be made explicitly inapplicable to preexisting Charitable Choice regulations concerning participation by religious organizations.

We accept this comment and agree that this regulation shall not be applicable to the programs governed by the Charitable Choice regulations found at 42 CFR Parts 54 and 54a and 45 CFR Parts 96, 260, and 1050. The final rule has been changed accordingly.

X. Religious Freedom Restoration Act (RFRA)

One commenter suggested that the rule, like the SAMHSA Charitable Choice regulation, rely on Religious Freedom Restoration Act (RFRA) against program-specific restrictions on religious staffing and asked that the rule provide specific guidance for how religious organizations may preserve their religious staffing freedom when participating in such programs.

The Department declines to adopt this suggestion at this time. RFRA, which applies to all Federal law and its implementation, is applicable regardless of whether it is specifically mentioned in this rule. No explicit recognition or treatment of the application of RFRA is required in this rule.

XI. Contracts and Vouchers

One commenter requested that the rule be amended to include contracts as well as grants because State or local governments often administer human services programs by using contracts rather than grants.

We decline to accept this suggestion, believing that further clarification is unnecessary. This rule applies to assistance distributed by the Department through grants, agreements, and other financial assistance. States and localities may not circumvent the requirements of this rule by simply using a different label for the form in which they distribute the Department funds.

One commenter insisted that redeemable vouchers that give beneficiaries choices between programs are only as real as the choices among programs. This commenter believed that the Department must ensure that secular alternatives are real and viable options for program beneficiaries. Another commenter believed that the voucher program authorized by the rule lacks adequate constitutional safeguards. This commenter believed that a voucher program is not completely neutral with respect to religion, that use of vouchers at a religious institution must be the result of wholly genuine and independent private choice, that the vouchers must pass directly through the hands of the beneficiaries, that the voucher program must not provide incentives to choose a religious institution over a non-religious one, that the program must provide genuine, legitimate secular options, and that there must be a secular purpose for the program. This commenter felt that the rule is confusing, as it is unclear whether it applies to programs attended exclusively by voucher beneficiaries, or extends to programs in which some but not all beneficiaries are using forms of redeemable disbursement.

This rule does not create a voucher program. Rather the rule applies to all grants, including voucher programs, covered by 45 CFR Parts 74, 92, and 96 which are not governed by pre-existing Charitable Choice regulations. Moreover, any voucher program that the Department operates will comply with Federal law, including the Constitution.

XII. Textual Concerns

One commenter observed generally that the text of §§ 87.1 and 87.2 did not include language that was in the preamble and remarked that if the narrative phrases added materially to the proper understanding of the relevant provisions, the regulation should be reworded to include such language.

We believe that the preamble and the text of §§ 87.1 and 87.2 are clear and unambiguous. Further, the text of these sections explicitly covers the six objectives of the rule outlined in the preamble.

XIII. Tax Exempt Organization Status

One commenter commended the Department for making it clear that an organization can be a nonprofit organization without having Internal Revenue Code § 501(c)(3) (I.R.C.) status. One commenter expressed concern, however, that the rule does not require religiously affiliated providers who contract with the Department to obtain tax-exempt status under I.R.C.

§ 501(c)(3) in order to be eligible for Federal funds, which the commenter felt may allow entities claiming religious affiliation and alternative ''nonprofit'' status, with little documentation, to compete for these funds.

Under this rule, religious organizations that otherwise are not required to be recognized as exempt from tax under § 501(c)(3) of the Internal Revenue Code may, but are not required to, establish a separate structure, including incorporating or operating the separated part recognized as exempt from tax under § 501(c)(3) of the I.R.C. Because religious organizations do not have to incorporate or operate as a non-profit organization, however, we do not preclude from participation organizations that do not obtain, and are not required to obtain, recognition of tax-exempt status under I.R.C. § 501(c)(3).

Regulatory Flexibility Analysis

The Regulatory Flexibility Act (RFA), 5 U.S.C. § 601 *et seq.,* requires agencies to consider the potential impact of regulatory actions on small entities—small businesses, small governmental units, and small not-profit organizations. We certify that this rule will not have a significant impact on a substantial number of small entities within the meaning of the RFA, since the rule involves only a modification in the Department's grant-management procedures. Therefore, a regulatory flexibility analysis as provided for by the RFA is not required.

Executive Order 12866

Executive Order 12866 requires that regulations be reviewed to ensure that they are consistent with the priorities and principles set forth in the Executive Order. The Department has determined that this rule is consistent with these priorities and principles. This rule is considered a ''significant regulatory action'' under the Executive Order, and therefore has been reviewed by the Office of Management and Budget, but is not an economically significant rulemaking. This rulemaking reflects our response to comments received on the NPRM that we issued on March 9, 2004.

Unfunded Mandates

Section 202 of the Unfunded Mandates Reform Act of 1995 requires that a covered agency prepare a budgetary impact statement before promulgating a rule that includes any Federal mandate that may result in the expenditure by State, local, and Tribal governments, in the aggregate, or by the private sector, of $100 million or more in any one year.

The Department has determined that this rule would not impose a mandate that will result in the expenditure by State, local, and Tribal governments, in the aggregate, or by the private sector, of more than $100 million in any one year, and therefore no such analysis has been included.

Assessment of Federal Regulations and Policies on Families

We certify that we have made an assessment of this rule's impact on the well-being of families, as required under § 654 of The Treasury and General Government Appropriations Act of 1999. The purpose of the Department's programs and therefore this rule is to strengthen the economic and social stability of families.

Executive Order 13132

Executive Order 13132, Federalism, requires that Federal agencies consult with State and local government officials in the development of regulatory policies with Federalism implications. In the NPRM, we specifically solicited comments from State and local government officials and received one comment from a State.

Paperwork Reduction Act

No new information collection requirements are imposed by these regulations, nor are any existing requirements changed as a result of their promulgation. Therefore, the requirements of the Paperwork Reduction Act of 1995 (44 U.S.C. § 3507(d)), regarding reporting and recordkeeping, do not apply.

List of Subjects

45 CFR Part 74

Administrative practice and procedures, Grants.

45 CFR Part 92

Administrative practice and procedures, Grants.

45 CFR Part 96

Administrative practice and procedures, Block grants.

45 CFR Part 87

Administrative practice and procedures, Grant programs—social programs, public assistance programs, nonprofit organizations.

■ For the reasons stated in the preamble, the Department is amending chapter I of Title 45 of the Code of Federal Regulations as follows:

PART 74—UNIFORM ADMINISTRATIVE REQUIREMENTS FOR AWARDS AND SUBAWARDS TO INSTITUTIONS OF HIGHER EDUCATION, HOSPITALS, OTHER NONPROFIT ORGANIZATIONS, AND COMMERCIAL ORGANIZATIONS

■ 1. The authority citation for part 74 continues to read as follows:

Authority: 5 U.S.C. 301.

■ 2. In subpart B add § 74.18 to read as follows:

§ 74.18 Participation by faith-based organizations.

The funds provided under this part shall be administered in compliance with the standards set forth in part 87 (Equal Treatment for Faith-based Organizations) of this chapter.

■ 3. In § 74.17, add paragraph (a) and add and reserve (b) to read as follows:

§ 74.17 Certifications and representations.

* * * * *

(a) The funds provided under this part shall be administered in compliance with the standards set forth in part 87 (Equal Treatment for Faith-based Organizations) of this chapter.

(b) [Reserved]

PART 92—UNIFORM ADMINISTRATIVE REQUIREMENTS FOR GRANTS AND COOPERATIVE AGREEMENTS TO STATE, LOCAL, AND TRIBAL GOVERNMENTS

■ 4. The authority for part 92 continues to read as follows:

Authority: 5 U.S.C. 301.

■ 5. In subpart B add § 92.13 and 92.14 to read as follows:

§ 92.13 Participation by faith-based organizations.

The funds provided under this part shall be administered in compliance with the standards set forth in part 87 (Equal Treatment for Faith-based Organizations) of this chapter.

§ 92.14 Compliance with Part 87.

The funds provided under this part shall be administered in compliance with the standards set forth in part 87 (Equal Treatment for Faith-based Organizations) of this chapter.

PART 96—BLOCK GRANTS

■ 6. The authority citation for part 96 is revised to read as follows:

Authority: 31 U.S.C. 1243 note, 7501–7507; 42 U.S.C. 300w *et seq.,* § 300x *et seq.,* § 300y *et seq.,* § 701 *et seq.,* § 8621 *et seq.,* § 9901 *et seq.,* § 1397 *et seq.,* 5 U.S.C. § 301.

■ 7. In subpart B add § 96.18 to read as follows:

§ 96.18 Participation by faith-based organizations.

The funds provided under this part shall be administered in compliance with the standards set forth in part 87 (Equal Treatment for Faith-based Organizations) of this chapter.

■ 8. Add Part 87 to read as follows:

PART 87—EQUAL TREATMENT FOR FAITH–BASED ORGANIZATIONS

Sec.
87.1 Discretionary grants
87.2 Formula and block grants

Authority: 5 U.S.C. 301.

§ 87.1 Discretionary grants.

(a) This section is not applicable to the programs governed by the Charitable Choice regulations found at 42 CFR Part 54a.

(b) Religious organizations are eligible, on the same basis as any other organization, to participate in any Department program for which they are otherwise eligible. Neither the Department nor any State or local government and other intermediate organizations receiving funds under any Department program shall, in the selection of service providers, discriminate for or against an organization on the basis of the organization's religious character or affiliation. As used in this section, ''program'' refers to activities supported by discretionary grants under which recipients are selected through a competitive process. As used in this section, the term ''recipient'' means an organization receiving financial assistance from an HHS awarding agency to carry out a project or program and includes the term ''grantee'' as used in 45 CFR Parts 74, 92, and 96.

(c) Organizations that receive direct financial assistance from the Department under any Department program may not engage in inherently religious activities, such as worship, religious instruction, or proselytization, as part of the programs or services funded with direct financial assistance from the Department. If an organization conducts such activities, the activities must be offered separately, in time or location, from the programs or services funded with direct financial assistance from the Department, and participation must be voluntary for beneficiaries of the programs or services funded with such assistance.

(d) A religious organization that participates in the Department-funded programs or services will retain its independence from Federal, State, and local governments, and may continue to carry out its mission, including the definition, practice, and expression of its religious beliefs, provided that it does not use direct financial assistance from the Department to support any inherently religious activities, such as worship, religious instruction, or proselytization. Among other things, a faith-based organization may use space in its facilities to provide programs or services funded with financial assistance from the Department without removing religious art, icons, scriptures, or other religious symbols. In addition, a religious organization that receives financial assistance from the Department retains its authority over its internal governance, and it may retain religious terms in its organization's name, select its board members on a religious basis, and include religious references in its organization's mission statements and other governing documents in accordance with all program requirements, statutes, and other applicable requirements governing the conduct of Department-funded activities.

(e) An organization that participates in programs funded by direct financial assistance from the Department shall not, in providing services, discriminate against a program beneficiary or prospective program beneficiary on the basis of religion or religious belief.

(f) No grant document, agreement, covenant, memorandum of understanding, policy, or regulation that is used by the Department or a State or local government in administering financial assistance from the Department shall require only religious organizations to provide assurances that they will not use monies or property for inherently religious activities. Any restrictions on the use of grant funds shall apply equally to religious and non-religious organizations. All organizations that participate in Department programs, including organizations with religious character or affiliations, must carry out eligible activities in accordance with all program requirements and other applicable requirements governing the conduct of Department-funded activities, including those prohibiting the use of direct financial assistance from the Department to engage in inherently religious activities. No grant document, agreement, covenant, memorandum of understanding, policy, or regulation that is used by the Department or a State or local government in administering financial assistance from the Department shall disqualify religious organizations from participating in the Department's programs because such organizations are motivated or influenced by religious faith to provide social services, or because of their religious character or affiliation.

(g) A religious organization's exemption from the Federal prohibition on employment discrimination on the basis of religion, set forth in section 702(a) of the Civil Rights Act of 1964, 42 U.S.C. 2000e–1, is not forfeited when the organization receives direct or indirect financial assistance from the Department. Some Department programs, however, contain independent statutory provisions requiring that all recipients agree not to discriminate in employment on the basis of religion. Accordingly, recipients should consult with the appropriate Department program office if they have questions about the scope of any applicable requirement.

(h) In general, the Department does not require that a recipient, including a religious organization, obtain tax-exempt status under section 501(c)(3) of the Internal Revenue Code to be eligible for funding under Department programs. Many grant programs, however, do require an organization to be a ''nonprofit organization'' in order to be eligible for funding. Funding announcements and other grant application solicitations that require organizations to have nonprofit status will specifically so indicate in the eligibility section of the solicitation. In addition, any solicitation that requires an organization to maintain tax-exempt status will expressly state the statutory authority for requiring such status. Recipients should consult with the appropriate Department program office to determine the scope of any applicable requirements. In Department programs in which an applicant must show that it is a nonprofit organization, the applicant may do so by any of the following means:

(1) Proof that the Internal Revenue Service currently recognizes the applicant as an organization to which contributions are tax deductible under section 501(c)(3) of the Internal Revenue Code;

(2) A statement from a State or other governmental taxing body or the State secretary of State certifying that:

(i) The organization is a nonprofit organization operating within the State; and

(ii) No part of its net earnings may benefit any private shareholder or individual;

(3) A certified copy of the applicant's certificate of incorporation or similar document that clearly establishes the nonprofit status of the applicant; or

(4) Any item described in paragraphs (h)(1) through (3) of this section if that

item applies to a State or national parent organization, together with a statement by the State or parent organization that the applicant is a local nonprofit affiliate.

(i) If a grantee contributes its own funds in excess of those funds required by a matching or grant agreement to supplement Department-supported activities, the grantee has the option to segregate those additional funds or commingle them with the Federal award funds. If the funds are commingled, the provisions of this section shall apply to all of the commingled funds in the same manner, and to the same extent, as the provisions apply to the Federal funds. With respect to the matching funds, the provisions of this section apply irrespective of whether such funds are commingled with Federal funds or segregated.

(j) To the extent otherwise permitted by Federal law, the restrictions on inherently religious activities set forth in this section do not apply where Department funds are provided to religious organizations as a result of a genuine and independent private choice of a beneficiary or through other indirect funding mechanisms, provided the religious organizations otherwise satisfy the requirements of the program. A religious organization may receive such funds as the result of a beneficiary's genuine and independent choice if, for example, a beneficiary redeems a voucher, coupon, or certificate, allowing the beneficiary to direct where funds are to be paid, or through a similar funding mechanism provided to that beneficiary and designed to give that beneficiary a genuine and independent choice among providers.

§ 87.2 Formula and block grants.

(a) This section is not applicable to the programs governed by the Charitable Choice regulations found at 42 CFR Part 54 and 45 CFR Parts 96, 260, and 1050.

(b) Religious organizations are eligible, on the same basis as any other organization, to participate in any Department program for which they are otherwise eligible. Neither the Department nor any State or local government receiving funds under any Department program nor any intermediate organization with the same duties as a governmental entity under this part shall, in the selection of service providers, discriminate for or against an organization on the basis of the organization's religious character or affiliation. As used in this section, ''program'' refers to activities supported by formula or block grants. As used in this section, the term ''recipient'' means an organization receiving financial assistance from an HHS awarding agency to carry out a project or program and includes the term ''grantee'' as used in 45 CFR Parts 74, 92, and 96.

(c) Organizations that receive direct financial assistance from the Department may not engage in inherently religious activities, such as worship, religious instruction, or proselytization, as part of the programs or services funded with direct financial assistance from the Department. If an organization conducts such activities, the activities must be offered separately, in time or location, from the programs or services funded with direct financial assistance from the Department, and participation must be voluntary for beneficiaries of the programs or services funded with such assistance.

(d) A religious organization that participates in the Department-funded programs or services will retain its independence from Federal, State, and local governments, and may continue to carry out its mission, including the definition, practice, and expression of its religious beliefs, provided that it does not use direct financial assistance from the Department to support any inherently religious activities, such as worship, religious instruction, or proselytization. Among other things, a faith-based organization that receives financial assistance from the Department may use space in its facilities, without removing religious art, icons, scriptures, or other religious symbols. In addition, a religious organization that receives financial assistance from the Department retains its authority over its internal governance and it may retain religious terms in its organization's name, select its board members on a religious basis, and include religious references in its organization's mission statements and other governing documents in accordance with all program requirements, statutes, and other applicable requirements governing the conduct of Department-funded activities.

(e) An organization that participates in programs funded by direct financial assistance from the Department shall not, in providing services, discriminate against a program beneficiary or prospective program beneficiary on the basis of religion or religious belief.

(f) No grant document, agreement, covenant, memorandum of understanding, policy, or regulation that is used by the Department or a State or local government in administering financial assistance from the Department shall require only religious organizations to provide assurances that they will not use monies or property for inherently religious activities. Any restrictions on the use of grant funds shall apply equally to religious and non-religious organizations. All organizations that participate in Department programs, including organizations with religious character or affiliations, must carry out eligible activities in accordance with all program requirements and other applicable requirements governing the conduct of Department-funded activities, including those prohibiting the use of direct financial assistance to engage in inherently religious activities. No grant document, agreement, covenant, memorandum of understanding, policy, or regulation that is used by the Department or a State or local government in administering financial assistance from the Department shall disqualify religious organizations from participating in the Department's programs because such organizations are motivated or influenced by religious faith to provide social services, or because of their religious character or affiliation.

(g) A religious organization's exemption from the Federal prohibition on employment discrimination on the basis of religion, set forth in section 702(a) of the Civil Rights Act of 1964, 42 U.S.C. 2000e–1, is not forfeited when the religious organization receives direct or indirect financial assistance from the Department. Some Department programs, however, contain independent statutory provisions requiring that all recipients agree not to discriminate in employment on the basis of religion. Accordingly, grantees should consult with the appropriate Department program office if they have questions about the scope of any applicable requirement.

(h) In general, the Department does not require that a recipient, including a religious organization, obtain tax-exempt status under section 501(c)(3) of the Internal Revenue Code to be eligible for funding under Department programs. Many grant programs, however, do require an organization to be a ''nonprofit organization'' in order to be eligible for funding. Individual solicitations that require organizations to have nonprofit status will specifically so indicate in the eligibility section of a solicitation. In addition, any solicitation that requires an organization to maintain tax-exempt status will expressly state the statutory authority for requiring such status. Grantees should consult with the appropriate Department program office to determine the scope of any applicable requirements. In Department programs

in which an applicant must show that it is a nonprofit organization, the applicant may do so by any of the following means:

(1) Proof that the Internal Revenue Service currently recognizes the applicant as an organization to which contributions are tax deductible under section 501(c)(3) of the Internal Revenue Code;

(2) A statement from a State or other governmental taxing body or the State secretary of State certifying that:

(i) The organization is a nonprofit organization operating within the State; and

(ii) No part of its net earnings may benefit any private shareholder or individual;

(3) A certified copy of the applicant's certificate of incorporation or similar document that clearly establishes the nonprofit status of the applicant; or

(4) Any item described in paragraphs (h)(1) through (3) of this section if that item applies to a State or national parent organization, together with a statement by the State or parent organization that the applicant is a local nonprofit affiliate.

(i) If a State or local government contributes its own funds in excess of those funds required by a matching or grant agreement to supplement Department-supported activities, the State or local government has the option to segregate those additional funds or commingle them with the Federal award funds. If the funds are commingled, the provisions of this section shall apply to all of the commingled funds in the same manner, and to the same extent, as the provisions apply to the Federal funds. With respect to matching funds, the provisions of this section apply irrespective of whether such funds are commingled with Federal funds or segregated.

(j) To the extent otherwise permitted by Federal law, the restrictions on inherently religious activities set forth in this section do not apply where Department funds are provided to religious organizations as a result of a genuine and independent private choice of a beneficiary or through other indirect funding mechanisms, provided the religious organizations otherwise satisfy the requirements of the program. A religious organization may receive such funds as the result of a beneficiary's genuine and independent choice if, for example, a beneficiary redeems a voucher, coupon, or certificate, allowing the beneficiary to direct where funds are to be paid, or through a similar funding mechanism provided to that beneficiary and designed to give that beneficiary a choice among providers.

Dated: July 9, 2004.

Tommy G. Thompson,

Secretary.

[FR Doc. 04–16130 Filed 7–15–04; 8:45 am]

BILLING CODE 4154–07–P

DEPARTMENT OF TRANSPORTATION

National Highway Traffic Safety Administration

49 CFR Parts 571 and 572

[Docket No. NHTSA–04–18075]

RIN 2127–AI58

Child Restraint Systems; Anthropomorphic Test Devices; Hybrid III Six-Year-Old Weighted Child Test Dummy

AGENCY: National Highway Traffic Safety Administration (NHTSA), Department of Transportation (DOT).

ACTION: Final rule, technical amendment.

SUMMARY: This document amends 49 CFR Part 572 by adding a new subpart describing a weighted version of the current Hybrid III six-year-old child size dummy (HIII–6C). The weighted dummy weighs 62 pounds, approximately ten pounds more than the current HIII–6C. The dummy will be used in compliance tests under the Federal child restraint standard to test the structural integrity of child restraints recommended for use by children weighing over 50 pounds. This document also makes a technical amendment to the child restraint standard by adding cross-references to the subpart added by today's document.

DATES: Effective date: This final rule becomes effective January 12, 2005. The incorporation by reference of certain publications listed in the regulations is approved by the Director of the Federal Register as of January 12, 2005.

Petitions for reconsideration must be received by August 30, 2004 and should refer to this docket and the notice number of this document and be submitted to: Administrator, National Highway Traffic Safety Administration, 400 Seventh St., SW., Washington, DC 20590.

FOR FURTHER INFORMATION CONTACT: For technical and policy issues, Sean Doyle, NHTSA Office of Crashworthiness Standards, at 202–366–1740.

For legal issues, Chris Calamita, NHTSA Office of the Chief Counsel, at 202–366–2992.

Both officials can be reached by mail at the National Highway Traffic Safety Administration, 400 Seventh Street, SW., Washington, DC 20590.

SUPPLEMENTARY INFORMATION:

I. Background

In June 2003, NHTSA issued a final rule amending Federal Motor Vehicle Safety Standard (FMVSS) No. 213, *Child restraint systems,* to add a weighted (62-pound) dummy to the compliance testing of child restraint systems recommended for use by larger children; *i.e.*, children weighing 50 to 65 pounds (lb)(68 FR 37620; June 24, 2003; Docket No. 03–15351). The rule specified that the agency will use the dummy to test such child restraints that are manufactured on or after August 1, 2005. The weighted dummy will be used as a means of ballast to evaluate the structural integrity of the child restraints; *i.e.*, to ensure that restraints certified up to 65 lb would not structurally fail in a crash.

Over the years, NHTSA has incorporated new and improved child test dummies into the compliance tests of FMVSS No. 213 as a means of ensuring a fuller evaluation of child restraint performance. The June 2003 final rule replaced most of the existing dummies used in the standard with a new 12-month-old Child Restraint Air Bag Interaction dummy, and state-of-the art Hybrid III 3- and 6-year-old dummies. NHTSA proposed to incorporate the weighted 6-year-old dummy (which is a HIII–6C to which weights have been added) into 49 CFR Part 572, so that the dummy could be used in the dynamic testing of child restraints recommended for children weighing above 50 lb. Without the weighted dummy with which to test such restraints, there would have been little practical effect of extending the application of FMVSS No. 213 to child restraint systems recommended for children above 50 lb.

Incorporation of the weighted 6-year-old dummy (referred to as the ''HIII–6CW'') was viewed as an interim measure until such time as a Hybrid III 10-year-old dummy (HIII–10C), now under development, becomes available. At the request of NHTSA, the Dummy Family Task Group of the Society of Automotive Engineers (SAE-DFTG) has taken the lead in designing and developing a HIII–10C. Development of the dummy has been further reinforced by Congress, which on December 4, 2002, enacted P.L. 107–318 (Dec. 4, 2002; 116 Stat. 2772) (''Anton's Law''). Section 4 of P.L. 107–318 directs the Secretary of Transportation to ''develop and evaluate an anthropomorphic test

device that simulates a 10-year old child for use in testing child restraints used in passenger motor vehicles.''

NHTSA is making progress evaluating the HIII–10C (76 lb) to determine its suitability for incorporation into 49 CFR Part 572, *Anthropomorphic Test Dummies.* In the meantime, prior to completion of that evaluation, the weighted 6-year-old dummy will be used to approximate children in the seven to eight year old age bracket, *i.e.*, children above 50 pounds.

NHTSA originally considered using all the measurement capabilities of the weighted dummy in FMVSS No. 213 compliance tests, including the dummy's instrumentation for measuring the potential for injuries to a child's head, the upper and lower ends of the neck, and the chest, as well as other body regions. However, because of concerns about the biofidelity of the weighted dummy, NHTSA decided to use the weighted dummy only to test the structural integrity of child restraints. 68 FR 37620, *supra.*

II. Notice Proposing the Weighted Dummy

On May 7, 2003, the agency issued a notice of proposed rulemaking (NPRM) that proposed to add the HIII–6CW (weighted) dummy to 49 CFR Part 572 in order to complement the then-proposed (now required) use of a HIII–6CW in FMVSS No. 213 (68 FR 24417). The NPRM proposed calibration requirements for the test dummy's thorax and lumbar flexion tests.

Evaluation of the Weighted Dummy

In developing the NPRM, the agency subjected the weighted dummy to two types of impact evaluations in the laboratory environment: component calibration tests and sled tests. Component calibration tests were conducted to compare the performance of the HIII–6CW dummy with that of the unmodified Hybrid III 6-year-old dummy (''HIII–6C dummy''). The agency followed the calibration test procedures specified for the HIII–6C dummy in 49 CFR Part 572 Subpart N. Since masses were added to the dummy's upper and lower torso, the agency limited its evaluation of the weighted dummy for certification responses to the thorax impact (specified in 49 CFR 572.124) and torso flexion (49 CFR 572.125) tests. Since the added weights will not influence the head drop, neck flexion and extension, and knee impact calibration tests, the agency did not conduct these tests with the weighted dummy.

The agency also conducted ten high acceleration (HYGE) sled tests with both the HIII–6C and the HIII–6CW (weighted) dummy in seating configurations restrained with three point belts and belt positioning booster seats. All tests were performed using the FMVSS No. 213 pulse (24g, 30 mph) and sled mounted seating buck.

Proposed Incorporation of the Weighted Dummy (HIII–6CW)

Based on the testing and evaluation of the HIII–6CW, [1] the agency tentatively concluded that the weighted dummy would be appropriate to serve as an interim measure for evaluating the safety of child restraint systems designed for children over 50 pounds. Accordingly, the agency proposed to incorporate the HIII–6CW dummy into 49 CFR Part 572 as Subpart S.

The agency proposed the same drawings and specifications for the weighted dummy as the drawings and specifications for the HIII–6C dummy in 49 CFR Part 572 Subpart N, with the following modifications in four main areas affected by the addition of the weights.

First, the drawings for the HIII–6CW (weighted) dummy's upper and lower torso assemblies were modified to include the spine box weighting plates and pelvis weighting spacer. To obtain a more uniform mass distribution and to accommodate sufficient mass within the available space, the agency proposed using a dense Tungsten alloy material. The agency decided against the use of a commercially available weighted vest on the test dummy because of its bulkiness and the potential of rattling or inertial slap [2] during sled tests, with the possibility of affecting the dummy's instrumentation responses. The agency also decided against the use of carbon steel weights because their size would reduce available thorax deflection space, and they would result in the elevation of the dummy's seated height by one inch.

Second, with regard to the thorax assembly and test procedure specifications for the HIII–6C dummy (49 CFR 572.124(b)(1)), the peak force defining the compression corridor was proposed to be changed from 1150–1380 Newtons (N) (259–310 lbf) for the HIII–6C dummy to 1225–1455 N (275–327 lbf) for the HIII–6CW (weighted) dummy. This was in response to test results that showed the HIII–6CW dummy responding with somewhat higher resistance forces to pendulum impact than the HIII–6C dummy. The higher force range reflected mass changes in the thorax that are needed to convert the HIII–6C to the HIII–6CW dummy. Additionally, § 572.124(b)(1) specifies that peak thoracic response forces for the HIII–6C must occur between 38 and 46 mm of rib cage compression, but that an early first peak transition force is permitted provided that it occurred after 12.5 mm but before 38 mm of sternum displacement and does not exceed by five percent the specified peak force at maximum thorax compression. The agency proposed limiting the transition force for the HIII–6CW to not more than ten percent of the peak specified value at maximum permissible deflection. This change addressed the fact that the weighted dummy did not consistently meet the 5 percent limit during testing.

Third, with regard to the upper and lower torso assemblies flexion test specifications for the HIII–6C dummy (49 CFR 572.125(b)(1)), the specification for the force applied as shown in Figure S2 was proposed to be changed for the HIII–6CW (weighted) dummy from 147–200 N (33–45 lbf) to 85–125 N (18.5–27.5 lbf). The HIII–6CW dummy yielded an average resistance to flexion force of 103 N (23.2 lbf), well below the 147–200 N range permitted for the HIII–6C. The HIII–6CW (weighted) dummy exhibited very good repeatability of resistance force in the flexion tests as well as no signs of related component deterioration in the sled tests. Accordingly, the agency tentatively concluded that lowering the range would impact neither the dummy's durability nor consistency.

Fourth, with regard to the upper and lower torso assemblies test procedure specifications for the HIII–6C dummy (49 CFR 572.125(c)(5)), the initial torso orientation angle specification for the HIII–6CW (weighted) dummy was proposed to be changed from 22 degrees to 32 degrees. The proposed increase in the initial torso orientation angle was to accommodate the additional mass load located on the spine box of the weighted dummy.

Copies of the proposed Procedures for Assembly, Disassembly, and Inspection (PADI) (September 2002) and of the draft Parts List and Drawings for the H–III6CW, Alpha Version (September 13, 2002) were placed in Docket No. 2003–15089–1.

III. Comments and Agency Decision

The agency received four comments to the NPRM, all of which generally

[1] *See* the technical report entitled ''Evaluation of the Weighted Hybrid III Six-Year-Old Child Dummy,'' October 2001. (Docket No. NHTSA–2002–11707–2.)''

[2] Because the weighed vest would permit some movement of the weights independent of the test dummy, the weights could continue to move forward for a brief period after the dummy has fully decelerated and then slap back onto the dummy.

supported the incorporation of the HIII–6CW (weighted) dummy into Part 572. Some of the commenters—Advocates for Highway and Auto Safety (Advocates), Evenflo Company, Inc. (Evenflo), and the Alliance of Automobile Manufacturers (Alliance) [3]—had concerns about the limits of the dummy in providing a full evaluation of child restraints. A dummy manufacturer (Denton ATD, Inc.) suggested technical changes to some of the proposed calibration tests and drawings for the dummy.[4]

This final rule adopts the HIII–6CW dummy into Part 572 generally as proposed, except we have modified some of the performance criteria after considering the comments to the NPRM. A discussion of the issues raised by the comments is set forth below. A copy of the Procedures for Assembly, Disassembly, and Inspection (April 2004) for the dummy, and copies of the Parts List and Drawings for the H–III6CW, Alpha Version (April 2004) can be found in the docket for this final rule.

Interim Use of the Weighted Dummy

Issue No. 1: Advocates, Evenflo and the Alliance supported incorporation of the weighted dummy to facilitate testing the structural integrity of CRSs recommended for children weighing more than 50 lb, but only as an interim measure until the Hybrid III 10-year-old dummy is adopted. The Alliance encouraged the agency to expedite the development of the 10-year-old test dummy and not to ''expend any additional resources toward the establishment of injury assessment capabilities'' for the weighted 6-year-old dummy.

Response: Based on the results from testing and evaluation, the agency has concluded that the weighted dummy is appropriate for evaluating certain aspects of the dynamic performance of child restraint systems designed for children over 50 lb. In particular, the weighted dummy is representative of children who would be using child restraints recommended for children weighing up to 65 lb, and the dummy has demonstrated the durability required to assess the structural integrity of these child restraints. Accordingly, the agency is incorporating the weighted 6-year-old dummy into 49 CFR Part 572 as Subpart S. As the agency stated in the June 24, 2003 final rule, the agency is seeking to use a HIII–10C dummy eventually to test booster seats certified for use by children with higher weights. While the development of the HIII–10C dummy proceeds at the quickest possible pace, the HIII–6CW will provide the agency with an interim test device for evaluating child restraint systems recommended for children weighing more than 50 lb.[5]

Issue No. 2: Advocates expressed concern that a 62–lb dummy will be used to test child restraints recommended for children weighing up to 65 lb. Advocates stated that a child who weighs 65 lb is 5 percent heavier than the maximum weight of the weighted dummy. Advocates requested that the agency demonstrate there to be no practical difference in real-world performance between the weighted dummy and a 65–lb child.

Response: The commenter raised this identical comment in the agency's recently-completed rulemaking on FMVSS No. 213 (68 FR 37620, *supra*). As we responded to Advocates in the FMVSS No. 213 rulemaking, we are confident in the ability of the 62-pound dummy to test restraints recommended for children weighing up to 65 lb. There will be less than a 3-lb difference between the dummy weight and the maximum certification weight of the child restraint; a difference of roughly 4.5 percent. The 33-lb Hybrid III three-year-old test dummy that has been long-used in FMVSS No. 213 has proven efficient at testing restraints certified to a maximum weight of 40 lb. This is a difference of 7 lb, or 17.5 percent.

Performance Specifications

Under FMVSS No. 213, child restraints manufactured on or after August 1, 2005 and recommended for children weighing over 50 lb will be tested with the HIII–6CW (weighted) dummy. The dummy will be used to evaluate the structural integrity of the restraints and will not be used to ascertain the performance of the restraints in limiting forces to the child dummy. However, while the HIII–6CW dummy's instrumentation will not be used at this time to determine compliance with the child restraint standard, the dummy may be instrumented to collect data for use in research. Data collected on the weighted dummy may provide assistance in the future development of injury criteria for this age group. Accordingly, this final rule includes procedures for calibration tests to ensure that the results are repeatable and reproducible.

Issue No. 1 (Frequency of calibration): Evenflo requested that the agency amend the Laboratory Test Procedure (LTP) for FMVSS No. 213 (TP–213) to require confirmation of the dummy's calibration each time it is changed between the weighted and non-weighted set-up. Evenflo stated that evaluation of the dummy did not address the effects of multiple tests or conversions between normal and weighted mode over several months. As such, Evenflo recommended that the calibration of dummy be assessed more frequently.

Response: We do not believe there is a need to amend LTP to include a requirement that the dummy be calibrated each time the weights are added or removed. The frequency of calibration is generally dependant on the type of test being run. The certification process typically requires re-calibration of the test dummy if the test dummy is disassembled and then reassembled. In order to change a 6-year-old dummy from weighted to unweighted, or visa versa, it is necessary to dismantle the dummy. Therefore, under the existing procedures it must be recalibrated before use.

Issue No. 2 (Thorax impact test): In developing the NPRM, the agency performed seven thorax impacts with a single weighted dummy. In these tests, the peak pendulum force responses in the dummy's thoracic deflection range of 38–46 mm met the specifications for the HIII–6C dummy in all tests. However, the average response was close to the upper limit of the specified corridor. In response to these results, the agency proposed changing the corridor from 1150–1380 N (for the unmodified HIII–6C dummy) to 1225–1455 N for the HIII–6CW dummy. The shift in the corridor was to assure better centering of the response specification.

Denton commented that the agency evaluation of the HIII–6CW dummy was insufficient to justify proposing a corridor different from those in the thorax impact test required for the unmodified HIII–6C. Denton was concerned that only a single dummy was tested to develop a new corridor. Denton suggested that either the agency

[3] The members of Alliance are BMW Group, DaimlerChrysler, Ford Motor Company, General Motors, Mazda, Mitsubishi Motors, Nissan, Porsche, Toyota, and Volkswagen.

[4] On August 8, 2003, Denton ATD petitioned the agency for reconsideration of a final rule that amended FMVSS No. 213 to adopt the III–6C dummy into the standard's compliance test procedures (68 FR 37620; June 24, 2003; Docket No. NHTSA–03–15351). In part, Denton asked NHTSA to amend the specifications for the clothing and shoes for the dummy. The agency will be responding to the petition in the near future. We not that today's final rule for the weighted dummy relies on the clothing and shoes specifications of the unweighted dummy. Therefore, any future changes to the clothing and shoe specifications for the HIII–6C dummy will also amend the clothing and shoes specifications for the HIII–6CW dummy.

[5] Even if the HIII–10C dummy were added to FMVSS No. 213's compliance test procedures, there may still be a need for the weighted 6-year-old to represent children between the ages of six and ten.

propose the same corridor used for the unmodified HIII–6C in 49 CFR Part 572 subpart N, or generate more data to justify the change.

The commenter submitted data from seven tests that it performed on a single dummy with and without the weights.[6] According to Denton's data, both the HIII–6CW (weighted) dummy and the HIII–6C dummy passed the 49 CFR Part 572 subpart N requirements. Denton's data from the weighted dummy demonstrated a slight difference in performance as compared to the unmodified dummy, but Denton stated that this was insignificant in relation to the corridor. Further, the weighted dummy tested by Denton performed close to the lower margin of the proposed corridor.

Response: In reviewing the data submitted by Denton, the agency has determined that Denton's data should be pooled with the agency's data to generate a larger sample size. Denton stated that, before the weights were added, the test dummies met the certification procedures for the HIII–6C test dummy as specified in 49 CFR Part 572 subpart N. NHTSA reviewed the data and has determined that the results indicate that the test dummies were biofidelic and appropriate for consideration.

With regards to the thorax impact test, Denton supplied the agency with three more thorax impact tests performed on a weighted dummy.[7] The dummy tested by Denton fit within the thorax corridors proposed by the agency, although with slightly lower values than generated by the agency's testing. Based on the results of Denton's thorax impact tests, the agency was able to generate a larger sample size to evaluate the HIII–6CW dummy.

The average of the pooled sample still results in a corridor higher than that used for the HIII–6C dummy, but lower than that originally proposed for the weighted dummy. Based on the average of the larger sample size, the agency is adopting a peak pendulum force corridor of 1205–1435 N (270.9–322.6 lbf) during the maximum allowed deflection range of 38 to 46 mm.

Issue No. 3 (Peak pendulum force): The NPRM proposed that the peak pendulum force during the thoracic deflection range of 12.5 and 38 mm not exceed by more than 10 percent the value of the peak force during the deflection range of 38 to 46 mm. The proposal was based on the agency's data indicating that the dummy it tested did not pass the 5 percent limit specified by 49 CFR Part 572 subpart N.

Denton recommended that the final rule retain the force limit between 12.5 mm and 38 mm currently in subpart N. Denton stated that since the issuance of the original technical report in October 2001, subpart N has been amended to change the force limit between 12.5 mm and 38 mm to an upper limit of 1500 N (67 FR 47328; July 18, 2002). Denton stated that the 1500 N limit is five standard deviations above the average measured on the weighted dummy evaluated for the proposal. Denton was concerned that keeping the proposed 10 percent limit could lead to the weighted dummy requiring special ribs.

Response: The agency agrees that the current upper limit of 1500 N has eliminated the need to permit a 10 percent excedance during the thoracic deflection range of 12.5–38 mm. Subsequent to the development of the HIII–6CW (weighted) dummy technical report, the agency increased the peak force limit for the sternum displacement test to 1500 N (67 FR 47321; July 18, 2002). All of the data submitted by Denton and generated by the agency for the sternum displacement test was below the 1500 N maximum, demonstrating that the increased maximum limit of 1500 N is valid for the HIII–6CW dummy as well as for the un-weighted dummy. Further, adoption of this maximum maintains consistency with HIII–6C dummy specifications.

Issue No. 4 (Torso flexion test): In developing the NPRM, the agency performed six torso flexion tests with the weighted dummy. The results indicated that the durability and structural integrity of the weighted dummy were not compromised by the added weight. However, the weighted dummy did not meet the established flexion force corridors for the HIII–6C dummy.

Agency testing demonstrated that the additional mass located on the spine box of the weighted dummy is responsible for an increase in the initial torso setup angle; an average of 31.2 degrees as opposed to the maximum of 22 degrees specified for the HIII–6C test dummy. As a result the agency proposed that the initial torso orientation angle must not exceed 32 degrees.

Denton stated that the agency evaluation of the single dummy was insufficient to propose shifting the force and initial angle corridors for the torso flexion test prescribed in 49 CFR Part 572 subpart N. Denton submitted data from its evaluation of one dummy tested with abdomens having different stiffness attributes: A ''hard'' abdomen and a ''soft'' abdomen. (Denton states that the hard abdomen is about 20 percent stiffer in a quasi-static compression test than the soft abdomen.)[8]

Denton's results showed that the weighted dummy with both the hard and the soft abdomens could pass the proposed 32 degree initial angle. However, while the weighted dummy with the hard abdomen passed the return angle test, the weighted dummy with the soft abdomen failed. Based on these results, Denton suggested that the final angle may need to be increased slightly if existing dummy's are to be retrofitted with weights.

Response: The dummy tested by Denton was certified to the subpart N requirements prior to the addition of the weights. The agency has thus determined that Denton's data are valid and should be considered by the agency. Based on the additional data provided by Denton, the final rule requires that for the 45-degree flexion test the torso of the weighted dummy must return within 9 degrees of the initial torso position upon removal of the flexion force. Denton tested both a soft and a hard abdomen, which permits the agency to better consider the range of HIII–6C dummies that exist in the field. Relying on the pooled data, the increase from the 8 degrees proposed by the NPRM addresses the slightly higher return angle average of Denton's data.

Issue No. 5 (Dummy resistance force specification): In pre-NPRM agency testing, the HIII–6CW (weighted) dummy torso in 45-degree flexion tests yielded an average resistance force of 103 N (23.2 lbf) with a standard deviation of 4 N (0.9 lbf). This was lower than the resistance force of 173.5 ± 26.5 N (39 ± 6 lbf) specified for the HIII–6C dummy. The result was attributed to the addition of the weights and was not seen as an indication that the durability or structural integrity of the dummy was compromised. Accordingly, the agency proposed a dummy resistance force specification of 105 ± 20 N (23 ± 4.5 lbf) for the weighted dummy.

Denton commented that it disagreed with the proposed force corridor based on its tests of weighted dummies with the hard and soft abdomens. Denton explained that it had expected the weighted dummy with the hard abdomen to perform at the middle of the proposed corridor and the dummy with the soft abdomen to perform at the lower end of the proposed corridor. Denton stated, however, that both

[6] See Denton's comments to the docket.

[7] See footnote 6.

[8] For the data submitted by Denton, see Docket No. NHTSA–2003–15089–4.

dummies tested below the minimum force of the corridor proposed in the NPRM. The commenter concluded that the proposed corridor was too high. The commenter believed that, because the dummy used in the agency's evaluation was not tested without weights, it cannot be determined if the dummy may have simply performed at the upper limit of the standard. Denton urged the agency to do more testing on multiple dummies in multiple laboratories to develop and validate a force corridor before incorporating a corridor into the standard.

Response: Denton provided a total of six test results from torso flexion tests that it performed on two different weighted dummies. As explained above, the agency has determined that both the data from agency testing and testing performed by Denton are appropriate for pooling to generate a larger sample size.

The dummies in Denton's testing did not meet the proposed resistance force corridor. (Denton's data ranged from 69 to 80 N. See, Docket No. NHTSA–2003–15089–4.) The agency recognizes that test response variation can result from variations in the abdominal stiffness and the abdomen's interaction with the ribcage. The average of the larger sample size is 88.6 N. Based on the larger sample size of data, the agency is adopting a resistance force specification of 88.6 ± 20 N (20.0 ± 4.5 lbf) for the 45-degree flexion test.

Method of Adding Weights to the Dummy

To minimize the increase in seated height of the dummy and to obtain a more uniform mass distribution, NHTSA proposed to use a dense Tungsten alloy material to add the additional weight to the HIII–6C test dummy. The higher density of the Tungsten alloy allowed the lumbar base weight to be fabricated thinner than what would have been required to achieve a similar mass increase by using carbon steel, allowing the dummy's seating height to be increased by only 0.72 inches (instead of a one-inch height increase resulting from use of carbon steel spacers). The design of the Tungsten alloy plates distributed the added weight more uniformly between the upper and lower torso halves. The Tungsten alloy material also allowed the agency to increase the added weight at the bottom of the lumbar spine (hereinafter referred to as ''pelvis'') from 3.8 lb to 4.9 lb while maintaining the thoracic spine weight increase at 5.2 lb.[9]

Issue No. 1: The proposed dimensions for the holes to attach the weights, the distance between these holes in the vertical dimension, and the overall size dimensions on the weights all have two decimal place dimensions. Denton commented that this implies a standard ± 0.01 inch tolerance. Denton stated that the proposed tolerances would result in potential problems aligning the holes in the weights with the corresponding holes in the dummy's spine box. Denton recommended that: ''the specifications incorporate a Geometric Dimension and Tolerancing (GD & T) true position tolerance of ± 0.002 inches at maximum material condition on one hole with the centerline of the other hole as the datum[.]''

Denton indicated that this would assure that any combination of parts made according to the specifications would always fit together. Denton further stated that under the proposed tolerance for the distance between holes in the vertical dimension, the mating parts would not match at nominal, further exacerbating the fit problem. Denton recommended that the distance dimensions be specified to three decimal places.

Denton also stated that the ± 0.01 inch tolerance for the weight measurements could give a variation in weight of up to 0.26 lb total for the thorax. To avoid potential problems with this weight variance in the spine box weights, Denton recommended using three decimal place dimensioning.

Response: The agency agrees with Denton that three-decimal-place dimensions are required to define the location of the holes in 167–2020–1&2. The corresponding hole locations in the 127-series drawing utilize three-decimal place dimensions and thus, in order to maintain consistency, the 167-series drawing will adopt the same scheme. The agency does not believe that a true position tolerance is necessary and in order to maintain consistency with the 127-series drawings, the agency is not adopting the dimension tolerancing recommended by Denton. The tolerances used in the 127-series drawings have not utilized the true position callout and the agency has not encountered any resulting mating problems for the dummy components therefore the agency does not expect any fit problems with the spine box. The agency also disagrees with Denton's proposal to change the length, width, and height dimensions to three-decimal-place dimensions. This change would only reduce the possible weight variation to .07 pounds per piece, a relatively insignificant amount. Furthermore, the tungsten alloy is a relatively difficult material to machine and holding tighter tolerances may increase the machining costs.

Issue No. 2: The proposed design of the spine box plate used a counterbore for the screw heads so that there are left and right weights. Denton recommended replacing the counterbore with a through hole, which would allow a single weight to be made and used. Denton stated that a single design for the spine box plate would reduce manufacturing and inventory costs.

Response: We agree. The agency is adopting a spine box plate design with a through hole as opposed to a counterbore for mounting. The through hole will be suitable for mounting the plate on either the left or right side of the dummy's spine, while reducing the confusion with multiple parts. We agree with Denton that by allowing use of a through hole, the manufacturing and inventorying costs may be reduced.

The use of the through hole does not result in any interference. The new design will at a maximum, result in a difference in weight of 0.027 lb per spine box weight or a total of 0.054 lb overall. The nominal weight of the upper torso is 17.33 lb, thus the proposed elimination of the counterbore feature would only change the total mass of the upper torso by 0.31 percent. In relation to the weight of the entire dummy, this change is insignificant.

IV. Technical Amendment

This document also makes a technical amendment to FMVSS No. 213 by adding cross-references to 49 CFR Part 572, Subpart S (the subpart added by today's document) to various paragraphs in FMVSS No. 213 that refer to the ''weighted'' 6-year-old dummy. This amendment clarifies FMVSS No. 213 and makes no substantive change to the standard. The June 24, 2003 final rule that adopted the weighted 6-year-old dummy into FMVSS No. 213 referenced this rulemaking on the HIII–6CW in referring to the weighted dummy (see 68 FR at 37652, col. 2). Because today's final rule completes the addition of Subpart S into 49 CFR Part 572, we are amending S5(d), S7.1.2(e), S9.1(f) and S9.3.2 of FMVSS No. 213 to refer to the weighted dummy as the Subpart S dummy.[10]

[9] The spine weights consist of two 2.6-pound plates, one on each lateral side of the thoracic spine. The Tungsten alloy weights also only increase the dummy's seated height by 0.7 inch, compared to carbon steel weights, which would increase the dummy's seated height by 1 inch.

[10] We are also correcting S7.1.1(e) of FMVSS No. 213 by deleting paragraph (e) of that section. S7.1.1 sets forth requirements that apply to child restraints manufactured before August 1, 2005. The requirement of S7.1.1(e) apply to child restraints

Continued

V. Costs

The agency estimates that the base cost of the new weighted 6-year-old child size dummy would be $31,170. The cost of an uninstrumented HIII–6C test dummy is approximately $30,000.[11] The cost difference of $1,170 is as follows: Raw tungsten alloy materials for the weights are approximately $270 for the lumbar spacer weight and $240 for each of the two spine weights. The fabrication of the parts requires approximately 12 hours of machinist labor at a cost of $35 per hour, for a total of $420. Instrumentation would add approximately $25,000 to $41,000 to the cost of an uninstrumented dummy, depending on the amount of data desired.

VI. Benefits

The agency has not quantified any benefits to the public from this rulemaking. There are qualitative benefits. The weighted 6-year-old child size dummy provides a suitable, repeatable, and objective test tool to the automotive safety community for development of improved safety systems for older children. In the absence of the dummy, the structural integrity of booster seats and child restraint systems designed for children from 50 to approximately 65 pounds was not evaluated. With the dummy, this aspect of performance can be appraised under FMVSS No. 213 in a meaningful manner.

VII. Lead Time

This final rule is effective in 180 days. The agency believes that lead time is not a major factor for upweighting the HIII–6C. The weights can be attached relatively easily. The HIII–6CW dummy will be used in FMVSS No. 213 compliance tests to test child restraints (typically booster seats) manufactured on or after August 1, 2005.

VIII. Rulemaking Analyses and Notices

A. Executive Order 12866 and DOT Regulatory Policies and Procedures

Executive Order 12866, ''Regulatory Planning and Review'' (58 FR 51735, October 4, 1993), provides for making determinations whether a regulatory action is ''significant'' and therefore subject to Office of Management and Budget (OMB) review and to the requirements of the Executive Order. The Order defines a ''significant regulatory action'' as one that is likely to result in a rule that may:

(1) Have an annual effect on the economy of $100 million or more or adversely affect in a material way the economy, a sector of the economy, productivity, competition, jobs, the environment, public health or safety, or State, local, or Tribal governments or communities;

(2) Create a serious inconsistency or otherwise interfere with an action taken or planned by another agency;

(3) Materially alter the budgetary impact of entitlements, grants, user fees, or loan programs or the rights and obligations of recipients thereof; or

(4) Raise novel legal or policy issues arising out of legal mandates, the President's priorities, or the principles set forth in the Executive Order.

NHTSA has considered the impact of this rulemaking action under Executive Order 12866 and the Department of Transportation's (DOT) regulatory policies and procedures (44 FR 11034, February 26, 1979). The Office of Management and Budget did not review this rulemaking document under Executive Order 12866. This rulemaking action has been determined not to be significant under the DOT's Regulatory Policies and Procedures.

This document amends 49 CFR Part 572 by adding design and performance specifications for a weighted 6-year-old child dummy that the agency will use in conducting its tests under FMVSS No. 213. If this final rule affects only those businesses that choose to manufacture or test with the dummy. It does not require anyone to manufacture or use the dummy.

The cost of an uninstrumented H–III6C dummy is approximately $30,000.[12] The cost of the raw tungsten alloy materials for the weights is $270 for the lumbar spacer weight and $240 for each spine weight. The fabrication of the parts requires approximately 12 hours of machinist labor at a cost of $35 per hour. Accordingly, the agency estimates that the cost of an H–III6CW dummy is $31,170. Instrumentation would add approximately $25,000 to $41,000 to the cost of the dummy, depending on the amount of instrumentation.

Because the economic impacts of this final rule are so minimal, no further regulatory evaluation is necessary.

B. Regulatory Flexibility Act

Pursuant to the Regulatory Flexibility Act (5 U.S.C. 601 *et seq.*, as amended by the Small Business Regulatory Enforcement Fairness Act (SBREFA) of 1996) whenever an agency is required to publish a notice of rulemaking for any proposed or final rule, it must prepare and make available for public comment a regulatory flexibility analysis that describes the effect of the rule on small entities (*i.e.*, small businesses, small organizations, and small governmental jurisdictions). The Small Business Administration's regulations at 13 CFR Part 121 define a small business, in part, as a business entity ''which operates primarily within the United States.'' (13 CFR 121.105(a)). No regulatory flexibility analysis is required if the head of an agency certifies the rule will not have a significant economic impact on a substantial number of small entities. SBREFA amended the Regulatory Flexibility Act to require Federal agencies to provide a statement of the factual basis for certifying that a rule will not have a significant economic impact on a substantial number of small entities.

NHTSA has considered the effects of this rulemaking under the Regulatory Flexibility Act. I hereby certify that the amendment does not have a significant economic impact on a substantial number of small entities. The amendment does not impose any requirements on anyone. Therefore, it does not have a significant economic impact on a substantial number of small entities.

C. National Environmental Policy Act

NHTSA has analyzed this rule for the purposes of the National Environmental Policy Act and determined that it does not have any significant impact on the quality of the human environment.

D. Executive Order 13132 (Federalism)

Executive Order 13132 requires NHTSA to develop an accountable process to ensure ''meaningful and timely input by State and local officials in the development of regulatory policies that have federalism implications.'' ''Policies that have federalism implications'' is defined in the Executive Order to include regulations that have ''substantial direct effects on the States, on the relationship between the national government and the States, or on the distribution of power and responsibilities among the various levels of government.'' Under Executive Order 13132, the agency may not issue a regulation with Federalism implications, that imposes substantial direct compliance costs, and that is not required by statute, unless the Federal government provides the funds necessary to pay the direct compliance costs incurred by State and local governments, the agency consults with State and local governments, or the

manufactured on or after August 1, 2005 and thus does not belong in S7.1.1.

[11] See the H–III6C dummy final rule at 65 FR 2064 (January 13, 2000).

[12] See the H–III6C dummy final rule at 65 FR 2064 (January 13, 2000).

agency consults with State and local officials early in the process of developing the proposed regulation. NHTSA also may not issue a regulation with Federalism implications and that preempts State law unless the agency consults with State and local officials early in the process of developing the proposed regulation.

NHTSA has analyzed this final rule in accordance with the principles and criteria set forth in Executive Order 13132. The agency has determined that this rule does not have sufficient federalism implications to warrant consultation and the preparation of a Federalism Assessment.

E. Civil Justice Reform

This rule will not have any retroactive effect. Under 49 U.S.C. 30103, whenever a Federal motor vehicle safety standard is in effect, a State may not adopt or maintain a safety standard applicable to the same aspect of performance which is not identical to the Federal standard, except to the extent that the state requirement imposes a higher level of performance and applies only to vehicles procured for the State's use. 49 U.S.C. 30161 sets forth a procedure for judicial review of final rules establishing, amending, or revoking Federal motor vehicle safety standards. That section does not require submission of a petition for reconsideration or other administrative proceedings before parties may file suit in court.

F. Paperwork Reduction Act

Under the Paperwork Reduction Act of 1995, a person is not required to respond to a collection of information by a Federal agency unless the collection displays a valid control number from the Office of Management and Budget (OMB). This rule does not have any requirements that are considered to be information collection requirements as defined by the OMB in 5 CFR Part 1320.

G. National Technology Transfer and Advancement Act

Section 12(d) of the National Technology Transfer and Advancement Act of 1995 (NTTAA), Public Law 104–113, section 12(d) (15 U.S.C. 272) directs NHTSA to use voluntary consensus standards in its regulatory activities unless doing so would be inconsistent with applicable law or otherwise impractical. Voluntary consensus standards are technical standards (*e.g.*, materials specifications, test methods, sampling procedures, and business practices) that are developed or adopted by voluntary consensus standards bodies, such as the Society of Automotive Engineers (SAE). The NTTAA directs NHTSA to provide Congress, through OMB, explanations when the agency decides not to use available and applicable voluntary consensus standards.

The H–III6C dummy, which is the dummy upon which the weighted dummy is based, was developed under the auspices of the SAE. All relevant SAE standards were reviewed as part of the development process. The following voluntary consensus standards have been used in developing the H–III6C dummy and the weighted dummy adopted in today's document: SAE Recommended Practice J211–1995 Instrumentation for Impact Tests—Parts 1 and 2, dated March, 1995; and SAE J1733 Information Report, titled ''Sign Convention for Vehicle Crash Testing'', dated December 1994.

H. Unfunded Mandates Reform Act

Section 202 of the Unfunded Mandates Reform Act of 1995 (UMRA), Pub. L. 104–4, Federal requires agencies to prepare a written assessment of the costs, benefits, and other effects of proposed or final rules that include a Federal mandate likely to result in the expenditure by State, local, or tribal governments, in the aggregate, or by the private sector, of more than $100 million annually (adjusted for inflation with base year of 1995). Before promulgating a NHTSA rule for which a written statement is needed, section 205 of the UMRA generally requires the agency to identify and consider a reasonable number of regulatory alternatives and adopt the least costly, most cost-effective, or least burdensome alternative that achieves the objectives of the rule.

This final rule does not impose any unfunded mandates under the UMRA. This final rule does not meet the definition of a Federal mandate because it does not impose requirements on anyone. It amends 49 CFR Part 572 by adding design and performance specifications for a weighted 6-year-old child dummy that the agency will use in FMVSS No. 213 and could use in other Federal motor vehicle safety standards. This final rule affects only those businesses that choose to manufacture or test with the dummy. It does not result in costs of $100 million or more to either State, local, or tribal governments, in the aggregate, or to the private sector. Thus, this rule is not subject to the requirements of sections 202 and 205 of the UMRA.

I. Regulation Identifier Number

The Department of Transportation assigns a regulation identifier number (RIN) to each regulatory action listed in the Unified Agenda of Federal Regulations. The Regulatory Information Service Center publishes the Unified Agenda in April and October of each year. You may use the RIN contained in the heading at the beginning of this document to find this action in the Unified Agenda.

J. Privacy Act Statement

Anyone is able to search the electronic form of all comments or petitions received into any of our dockets by the name of the individual submitting the comment (or signing the comment, if submitted on behalf of an association, business, labor union, etc.). You may review DOT's complete Privacy Act Statement in the **Federal Register** published on April 11, 2000 (Volume 65, Number 70; Pages 19477–78) or you may visit *http://dms.dot.gov*.

List of Subjects

49 CFR Part 571

Imports, Incorporation by reference, Motor vehicle safety, Reporting and recordkeeping requirements, Tires.

49 CFR Part 572

Motor vehicle safety, Incorporation by reference.

■ In consideration of the foregoing, NHTSA amends 49 CFR Chapter V as follows:

PART 571—FEDERAL MOTOR VEHICLE SAFETY STANDARDS

■ 1. The authority citation for Part 571 continues to read as follows:

Authority: 49 U.S.C. 322, 30111, 30115, 30117 and 30166; delegation of authority at 49 CFR 1.50.

■ 2. Section 571.213 is amended by revising S5(d), S7.1.2(e), S9.1(f) and S9.3.2, and removing S7.1.1(e), to read as follows:

§ 571.213 Standard No. 213; Child restraint systems.

* * * * *

S5 * * *

(d) Each child restraint tested with a Part 572 Subpart S dummy need not meet S5.1.2 and S5.1.3.

* * * * *

S7.1.2 * * *

(e) A child restraint that is manufactured on or after August 1, 2005, that is recommended by its manufacturer in accordance with S5.5 for use either by children in a specified mass range that includes any children

having a mass greater than 22.7 kg or by children in a specified height range that includes any children whose erect standing height is greater than 1100 mm is tested with a part 572 subpart S dummy.

* * * * *

S9.1 * * *

(f) *Hybrid III 6-year-old dummy (49 CFR Part 572, Subpart N) and Hybrid III 6-year-old weighted dummy (49 CFR Part 572, Subpart S).* When used in testing under this standard, the dummies specified in 49 CFR Part 572, Subpart N and Subpart S, are clothed in a light-weight cotton stretch short-sleeve shirt and above-the-knee pants, and size 12½ M sneakers with rubber toe caps, uppers of dacron and cotton or nylon and a total mass of 0.453 kg.

* * * * *

S9.3.2 When using the test dummies conforming to Part 572 Subparts N, P, R, or S, prepare the dummies as specified in this paragraph. Before being used in testing under this standard, dummies must be conditioned at any ambient temperature from 20.6° to 22.2° C and at any relative humidity from 10 percent to 70 percent, for at least 4 hours.

* * * * *

PART 572—ANTHROPOMORPHIC TEST DUMMIES

■ 3. The authority citation for Part 572 continues to read as follows:

Authority: 49 U.S.C. 322, 30111, 30115, 30117 and 30166; delegation of authority at 49 CFR 1.50.

■ 4. 49 CFR part 572 is amended by adding a new subpart S, consisting of §§ 572.160–572.167, to read as follows:

Subpart S—Hybrid III Six-Year-Old Weighted Child Test Dummy

Sec.
572.160 Incorporation by reference.
572.161 General description.
572.162 Head assembly and test procedure.
572.163 Neck assembly and test procedure.
572.164 Thorax assembly and test procedure.
572.165 Upper and lower torso assemblies and torso flexion test procedure.
572.166 Knees and knee impact test procedure.
572.167 Test conditions and instrumentation.

Subpart S—Hybrid III Six-Year-Old Weighted Child Test Dummy

§ 572.160 Incorporation by reference.

(a) The following materials are hereby incorporated into this subpart S by reference:

(1) A drawings and specifications package entitled ''Parts List and Drawings, Part 572 Subpart S, Hybrid III Weighted Six-Year Old Child Test Dummy (H–III6CW, Alpha Version) April 13, 2004'', incorporated by reference in § 572.161 and consisting of:

(i) Drawing No. 167–0000, Complete Assembly, incorporated by reference in § 572.161;

(ii) Drawing No. 167–2000, Upper Torso Assembly, incorporated by reference in §§ 572.161, 572.164, and 572.165 as part of a complete dummy assembly;

(iii) Drawing No. 167–2020, Spine Box Weight, incorporated by reference in §§ 572.161 and 572.165 as part of a complete dummy assembly;

(iv) Drawing No. 167–3000, Lower Torso Assembly, incorporated by reference in §§ 572.161, and 572.165 as part of a complete dummy assembly;

(v) Drawing No. 167–3010, Lumbar Weight Base, incorporated by reference in §§ 572.161 and 572.165 as part of a complete dummy assembly; and

(vi) The Hybrid III Weighted Six-Year-Old Child Parts/Drawing List, incorporated by reference in § 572.161.

(2) A procedures manual entitled ''Procedures for Assembly, Disassembly, and Inspection (PADI) of the Hybrid III Six-Year-Old Weighted Child Test Dummy (H–III6CW), April 2004,'' incorporated by reference in § 572.161;

(3) The Director of the Federal Register approved those materials incorporated by reference in accordance with 5 U.S.C. 552(a) and 1 CFR part 51. Copies of the materials may be inspected at NHTSA's Technical Reference Library, 400 Seventh Street, SW., room 5109, Washington, DC, or at the National Archives and Records Administration (NARA). For information on the availability of this material at NARA, call 202–741–6030, or go to: *http://www.archives.gov/federal_register/code_of_federal_regulations/ibr_locations.html.*

(b) The incorporated materials are available as follows:

(1) The Drawings and Specifications for the Hybrid III Six-Year-Old Weighted Child Test Dummy referred to in paragraph (a)(1) of this section are available in electronic format through the NHTSA docket center and in paper format from Leet-Melbrook, Division of New RT, 18810 Woodfield Road, Gaithersburg, MD 20879, (301) 670–0090.

(2) [Reserved]

§ 572.161 General description.

(a) The Hybrid III Six-Year-Old Weighted Child Test Dummy is defined by drawings and specifications containing the following materials:

(1) ''Parts List and Drawings, Part 572 Subpart S, Hybrid III Weighted Six-Year Old Child Test Dummy (H–III6CW, Alpha Version) April 13, 2004'' (incorporated by reference, see § 572.160),

(2) The head, neck, arm, and leg assemblies specified in 49 CFR 572 subpart N; and

(3) ''Procedures for Assembly, Disassembly, and Inspection (PADI) of the Hybrid III Six-Year-Old Weighted Child Test Dummy, April 2004'' (incorporated by reference, see § 572.160).

TABLE A

Component assembly [1]	Drawing No.
Complete assembly	167–0000
Upper torso assembly	167–2000
Spine box weight	167–2020
Lower torso assembly	167–3000
Lumbar weight base	167–3010

[1] Head, neck, arm, and leg assemblies are as specified in 49 CFR 572 subpart N.

(b) Adjacent segments are joined in a manner such that except for contacts existing under static conditions, there is no contact between metallic elements throughout the range of motion or under simulated crash impact conditions.

(c) The structural properties of the dummy are such that the dummy must conform to Subpart S in every respect and Subpart N as applicable, before use in any test similar to those specified in Standard 208, ''Occupant Crash Protection'' (49 CFR 571.208), and Standard 213, ''Child Restraint Systems'' (49 CFR 571.213).

§ 572.162 Head assembly and test procedure.

The head assembly is assembled and tested as specified in 49 CFR 572.122 (Subpart N).

§ 572.163 Neck assembly and test procedure.

The neck assembly is assembled and tested as specified in 49 CFR 572.123 (Subpart N).

§ 572.164 Thorax assembly and test procedure.

(a) *Thorax (upper torso) assembly.* The thorax consists of the part of the torso assembly shown in drawing 167–2000 (incorporated by reference, see § 572.160).

(b) When the anterior surface of the thorax of a completely assembled dummy (drawing 167–2000) that is seated as shown in Figure S1 is impacted by a test probe conforming to 49 CFR 572.127(a) at 6.71 ± 0.12 m/s (22.0 ± 0.4 ft/s) according to the test procedure specified in 49 CFR 572.124(c):

(1) The maximum sternum displacement relative to the spine, measured with chest deflection transducer (specified in 49 CFR 572.124(b)(1)), must be not less than 38.0 mm (1.50 in) and not more than 46.0 mm (1.80 in). Within this specified compression corridor, the peak force, measured by the probe in accordance with 49 CFR 572.127, must be not less than 1205 N (270.9 lbf) and not more than 1435 N (322.6 lbf). The peak force after 12.5 mm (0.5 in) of sternum displacement, but before reaching the minimum required 38.0 mm (1.46 in) sternum displacement limit, must not exceed an upper limit of 1500 N.

(2) The internal hysteresis of the ribcage in each impact as determined by the plot of force vs. deflection in paragraph (b)(1) of this section must be not less than 65 percent but not more than 85 percent.

(c) *Test procedure.* The thorax assembly is tested as specified in 49 CFR 572.124(c).

§ 572.165 Upper and lower torso assemblies and torso flexion test procedure.

(a) *Upper/lower torso assembly*. The test objective is to determine the stiffness effects of the lumbar spine (specified in 49 CFR 572.125(a)), including cable (specified in 49 CFR 572.125(a)), mounting plate insert (specified in 49 CFR 572.125(a)), nylon shoulder bushing (specified in 49 CFR 572.125(a)), nut (specified in 49 CFR 572.125(a)), spine box weighting plates (drawing 167–2020), lumbar base weight (drawing 167–3010), and abdominal insert (specified in 49 CFR 572.125(a)), on resistance to articulation between the upper torso assembly (drawing 167–2000) and the lower torso assembly (drawing 167–3000). Drawing Nos. 167–2000, 167–2020, 167–3000 and 167–3010 are incorporated by reference, see § 572.160.

(b)(1) When the upper torso assembly of a seated dummy is subjected to a force continuously applied at the head to neck pivot pin level through a rigidly attached adaptor bracket as shown in Figure S2 according to the test procedure set out in 49 CFR 572.125(c), the lumbar spine-abdomen assembly must flex by an amount that permits the upper torso assembly to translate in angular motion until the machined surface of the instrument cavity at the back of the thoracic spine box is at 45 ± 0.5 degrees relative to the transverse plane, at which time the force applied as shown in Figure S2 must be within 88.6 N ± 20 N (20.0 N ± 4.5 N), and

(2) Upon removal of the force, the torso assembly must return to within 9 degrees of its initial position.

(c) *Test procedure*. The upper and lower torso assemblies are tested as specified in 49 CFR 572.125(c), except that in paragraph (c)(5) of that section, the initial torso orientation angle may not exceed 32 degrees.

§ 572.166 Knees and knee impact test procedure.

The knee assembly is assembled and tested as specified in 49 CFR 572.126 (Subpart N).

§ 572.167 Test conditions and instrumentation.

The test conditions and instrumentation are as specified in 49 CFR 572.127 (Subpart N).

BILLING CODE 4910–59–P

Figures to Subpart S

FIGURE S1

THORAX IMPACT TEST SET-UP SPECIFICATIONS

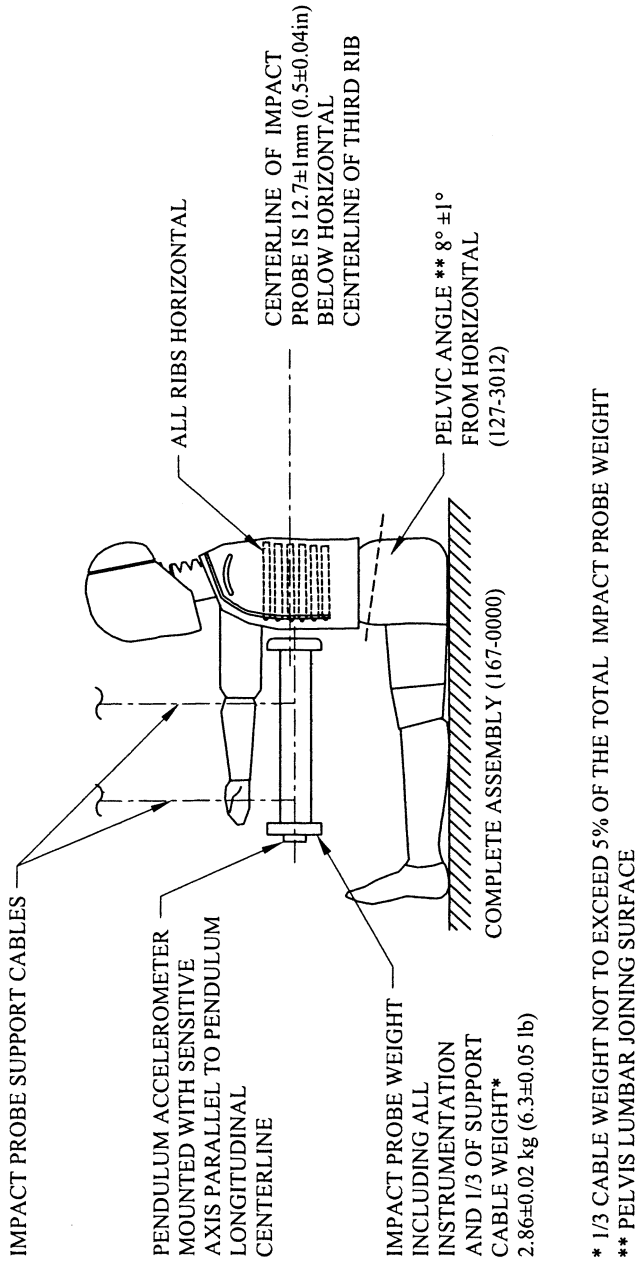

* 1/3 CABLE WEIGHT NOT TO EXCEED 5% OF THE TOTAL IMPACT PROBE WEIGHT

** PELVIS LUMBAR JOINING SURFACE

FIGURE S2

TORSO FLEXION TEST SET-UP SPECIFICATIONS

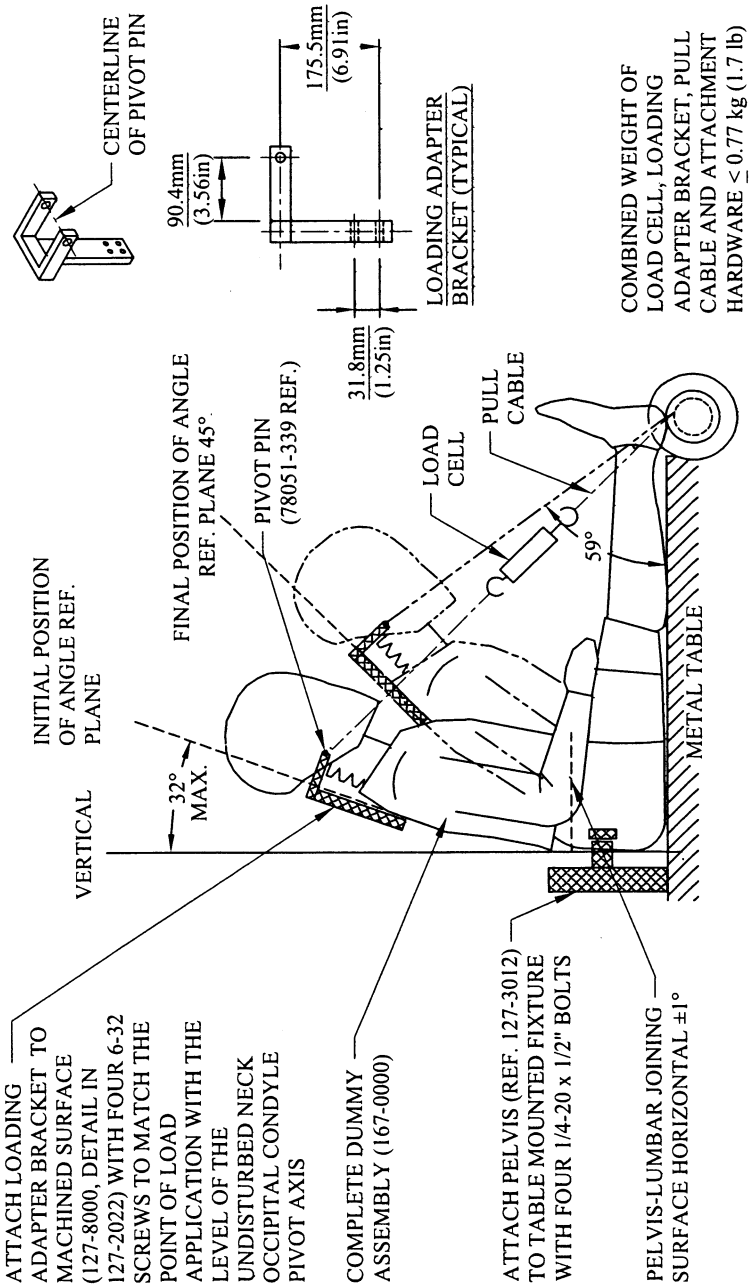

Issued: July 7, 2004.

Otis G. Cox,

Deputy Administrator.

[FR Doc. 04–15851 Filed 7–15–04; 8:45 am]

BILLING CODE 4910–59–C

Proposed Rules

Federal Register
Vol. 69, No. 136
Friday, July 16, 2004

This section of the FEDERAL REGISTER contains notices to the public of the proposed issuance of rules and regulations. The purpose of these notices is to give interested persons an opportunity to participate in the rule making prior to the adoption of the final rules.

FARM CREDIT SYSTEM INSURANCE CORPORATION

12 CFR Part 1412

RIN 3055–AA08

Golden Parachute and Indemnification Payments

AGENCY: Farm Credit System Insurance Corporation (FCSIC or Corporation).

ACTION: Proposed rule.

SUMMARY: The FCSIC is issuing a proposed rule limiting golden parachute and indemnification payments to institution-related parties (IRPs) by Farm Credit System institutions, including their subsidiaries, service corporations and affiliates. The purpose of the rule is to prevent abuses in golden parachute and indemnity payments and to protect the assets of the institution and the Farm Credit System Insurance Fund.

DATES: Comments must be received by October 14, 2004.

ADDRESSES: You may send comments by electronic mail through the ''News'' section of FCSIC's Web site, *www.fcsic.gov,* or through the Governmentwide *''www.regulations.gov''* portal. You may also send comments to Dorothy L. Nichols, General Counsel at *''nicholsd@fcsic.gov''* or by mail at the address listed below. Copies of all comments we receive, may be reviewed in our office in McLean, Virginia.

FOR FURTHER INFORMATION CONTACT: Dorothy L. Nichols, General Counsel, Farm Credit System Insurance Corporation, 1501 Farm Credit Drive, McLean, VA, 22102, 703–883–4211, TTY 703–883–4390, Fax 703–790–9088.

SUPPLEMENTARY INFORMATION:

Paperwork Reduction Act

No collection of information pursuant to section 3504(h) of the Paperwork Reduction Act (44 U.S.C. 3501 *et seq.*) is contained in the proposed rule. Consequently, no information was submitted to the Office of Management and Budget for review.

Regulatory Flexibility Act

Pursuant to section 605(b) of the Regulatory Flexibility Act (Pub. L. 96–354, 5 U.S.C. 601 *et seq.*), it is certified that the proposed rule will not have significant impact on a substantial number of small entities.

Background

Section 218 of the Farm Credit System Reform Act of 1996 (''Reform Act'') amended the Farm Credit Act of 1971 by adding a new section 5.61B. *See* Public Law 104–105, Feb. 10, 1996. This section authorizes the Corporation to prohibit or limit, by regulation or order, golden parachute and indemnification payments. *See* 12 U.S.C. 2277a–10b. Section 5.61B is similar to legislative authorities given to the other Federal financial institution regulators. *See e.g.* 12 U.S.C. 1828(k).

The terms golden parachute and indemnification payment are defined in the statute at 12 U.S.C. 2277a–10b(a)(1) and (2). In general, golden parachutes are employment contracts that offer substantial payments when employment is terminated. Indemnification payments are often used to reimburse officers or directors for personal losses due to judgments or litigation costs incurred while exercising official duties. The golden parachute portion of the proposed rule applies to any Farm Credit System institution seeking to make golden parachute payments only when the institution is in a ''troubled condition.'' The indemnification part of the proposed rule applies to Farm Credit System institutions regardless of their financial condition. Its primary purpose is to prohibit reimbursements that benefit wrongdoers. For example, an institution could not indemnify officers or directors for legal expenses or liabilities that result from a successful Farm Credit Administration (FCA) administrative action. However, if the officer or director is cleared of the charges, legal fees and costs can be reimbursed.

Golden Parachute Prohibition

The regulation follows the statutory definition of a golden parachute payment. It is a payment (or an agreement to make a payment) that:

- Is in the nature of compensation by any System institution for the benefit of any current or former institution-related party;
- Is based on an obligation that is contingent on termination; and
- Is received on or after, or is made in contemplation of certain events that signify the System institution is in a troubled condition.

Following the criteria set out in section 5.61B(a)(1) of the Reform Act, the proposed rule prohibits golden parachute payments by institutions that are insolvent, in conservatorship or receivership, or rated a ''4'' or ''5'' in the FCA Financial Institution Rating System. Section 5.61B(a)(1)(A) also authorizes the Corporation to define by regulation other circumstances that warrant a determination that an institution is in a troubled condition.

The proposed rule defines troubled condition to include any institution: (1) Subject to a cease-and-desist order or written agreement issued by the FCA requiring it to improve its financial condition; (2) subject to an FCA proceeding that may result in an order that requires improvement in financial condition; or (3) informed in writing by the Corporation that it is in troubled condition based on its most recent report of examination or other pertinent information. For banks, troubled condition also includes a bank that is: (1) Unable to make timely payments of principal and interest on bank-insured obligations; or (2) receiving assistance from the Insurance Fund. For the Federal Agricultural Mortgage Corporation (''Farmer Mac''), troubled condition also includes inability to make timely payments of principal and interest on its debt obligations or an inability to fulfill its guarantee obligations. The definition of troubled condition in the proposed rule is similar to the definition in rules adopted by the other Federal financial institution regulators. See *e.g.*, 12 CFR 359.1(f); 12 CFR 563.555 and 12 CFR 701.14.

Exceptions

The proposed rule lists eight exceptions to the prohibition on golden parachute payments in § 1412.2(f)(2). Four of these are listed in the statute: ERISA [1] qualified retirement plans; nonqualified ''bona fide'' deferred or supplemental compensation plans; other nondiscriminatory benefit plans;

[1] Employee Retirement Income Security Act of 1974, as amended. (29 U.S.C. 1002(1)).

and payments made by reason of death or disability. *See* 12 U.S.C. 2277a–10b(a)(1)(c).

Nondiscriminatory means a plan or arrangement that applies to all employees who meet customary eligibility requirements such as minimum length-of-service standards. We understand that many severance plans pay somewhat more generous benefits to higher ranking employees. The proposed rule would allow a modest disparity in nondiscriminatory severance benefits linked to objective criteria like job title or length of service. The proposed definition of nondiscriminatory specifies a maximum 20 percent in any one criteria, unless a request for a larger amount is granted by the Corporation. For example, if lower-level employees are provided 50 percent of their yearly salary and 1 week of salary for each year of service, higher level employees could receive 60 percent of their yearly salary plus 1 week of salary for each year of service. Our hope is that this permitted modest discrepancy would allow System institutions to offer severance benefits that conform to industry norms for nondiscriminatory benefit plans. The statute grants the Corporation authority to determine other permissible arrangements and four of the eight exceptions in § 1412.2(f)(2) are exceptions added by the Board for System institutions. They include payments required by state or foreign law and a safe harbor provision.

Section 1412.2(f)(2)(viii) adds an exception that can be used in lieu of paragraph (f)(2)(vii) for severance pay plans or arrangements that do not meet the regulatory definition of nondiscriminatory. We understand that at times different benefit arrangements may be made available to different employees. For example, an institution that is experiencing financial trouble may want to terminate some employees immediately while providing incentive payments to employees with critical functions so as to delay their departures. The proposed rule limits payments or arrangements under this exception to 12-months' base salary, unless a request for a larger payment is granted by the Corporation. Minor deviations in severance benefits that involve tangible property would also be permitted. For example, an institution may want to give some departing employees their laptops but other employees would get no additional benefits. We would not treat this as a prohibited golden parachute payment, as long as the cost is reasonable and the practice customary. We hope this provision provides a workable safe harbor for institutions that want to reward more highly compensated employees that have greater responsibilities without undermining the intent of the legislation.

Section 1412.5(a)(2) permits a troubled institution to hire a ''white knight'', an individual hired to improve the institution's condition, and agree to pay a golden parachute payment upon termination of employment, provided the institution obtains the prior written consent of the FCA and the Corporation. Such an agreement has the potential to benefit the institution and the Insurance Fund. We recognize that individuals who possess the experience and expertise necessary to reverse a troubled institution may not take the job unless they receive an agreement for a severance payment reflecting market rates, in the event that their efforts are not successful.

Section 1412.5(a)(3) contains an exception for a change in control. System institutions may pay up to 12-month's salary in the event of a change of control with the prior consent of the FCA. The Board believes 1-year's salary should be a sufficient incentive for a senior executive to objectively consider a merger that may result in the loss of that executive's job at a troubled institution.

Finally, the proposed rule in § 1412.5(a)(1) sets out a procedure to allow System institutions to request authority for what would otherwise be a prohibited golden parachute payment. This provision recognizes that there may be valid business reasons to seek an agreement not covered by any of the express exceptions, which the institution believes should not be prohibited. If an institution seeks such an authorization, the statute sets out a number of factors that the FCA and the Corporation may consider. *See* 12 U.S.C. 2277a–10b(c). The proposed rule at § 1412.5(a)(4) and (b) enumerates the factors that the FCA and the Corporation will consider, including whether the IRP committed any fraudulent acts, breached a fiduciary duty or played a substantial role in the institution's troubled condition. Under the proposed rule, the institution making the request should address the factors specified in the rule so that the FCA and the Corporation can consider whether the requested payment would be contrary to the intent of the prohibition. The institution should include any information of which it has knowledge that indicates there is a reasonable basis to believe that the IRP satisfies any of the criteria set out in § 1412.5(a)(4) and (b). If the applicant is not aware of any such information, it shall certify that it is not.

Indemnification Payments

The statute prohibits Farm Credit System institutions from making an indemnification payment for any liability or legal expense arising from an administrative or civil action brought by FCA that results in a civil money penalty, removal from office or a prohibition on participation in the System institution's business. *See* 12 U.S.C. 2277a–10b(a)(2). Institutions may purchase directors and officers insurance to cover the legal expenses even if the individual loses the legal action and pays settlement costs. *See* 12 U.S.C. 2277a–10b(e)(l). Nevertheless, the institution cannot use directors and officers insurance to pay the civil money penalty.

The proposed rule, at § 1412.2(l), follows the definition of a prohibited indemnification payment set out in the statute. It includes any payment or agreement to pay an institution-related party for any civil money penalty or judgment resulting from an administrative or civil action brought by FCA where the person must pay a civil money penalty, is removed from office or is subject to a cease and desist action. There are two exceptions in the proposed rule. The first allows System institutions to purchase commercial insurance to cover expenses other than judgments and penalties. Second, the proposed rule permits a partial indemnification. If there has been a finding that clears the individual, indemnification is permitted for the legal or professional expenses attributable to these charges. In addition, § 1412.6 sets out criteria for permissible ''up front'' indemnification payments. The System institution's board of directors must determine that the party requesting indemnification acted in good faith. Also, the payment cannot materially adversely affect the institution's safety and soundness. Finally, the party must agree to reimburse the institution for advanced indemnification payments if they become prohibited payments later, due to an unfavorable ruling.

Farm Credit System Institutions

The prohibitions in 12 U.S.C. 2277a–10b apply to all Farm Credit System institutions. The proposed rule at § 1412.2(b) defines Farm Credit System institutions to include all associations, banks, service corporations and their subsidiaries and affiliates, except the Farm Credit Financial Assistance Corporation. It also includes Farmer Mac and its subsidiaries and affiliates,

which is described in 12 U.S.C. 2279aa–1(a)(2) as an institution of the Farm Credit System. Furthermore, 12 U.S.C. 2277a–10b(b) specifies that the prohibition on golden parachute and indemnity payments was meant to include all Farm Credit System institutions, including even a conservatorship or receivership of Farmer Mac. The legislative history of the Reform Act makes this point clear. It states: ''New subsection (a) provides that FCSIC has authority to prohibit or limit golden parachutes or indemnifications, including the Federal Agricultural Mortgage Corporation (Farmer Mac).'' H.R. Rep. 104–421, 104th Cong., 1st Sess. 12 (1995).

Institution-Related Party

The proposed rule prohibits certain golden parachute and indemnification payments made to or for an institution-related party. The term institution-related party (IRP) is defined in the statute at 12 U.S.C. 2277a–10b(a)(3). It includes directors, officers, employees or agents for a Farm Credit System institution, stockholders (other than another Farm Credit System institution), consultants, joint venture partners and any one else who FCA determines has participated in the affairs of the institution. Additionally, IRPs include independent contractors, including attorneys, appraisers or accountants, that knowingly or recklessly participate in an unsafe or unsound practice that caused or is likely to cause harm to the institution. We will examine very closely any attempt by a Farm Credit System institution to avoid the regulation by employing the IRP in some other capacity (*e.g.*, a consultant) and calling the arrangement consulting compensation rather than a severance payment or golden parachute.

Receivership Issues

Section 1412.8 explains that this regulation is not meant to bind any receiver of a failed Farm Credit System institution. The fact that FCSIC or FCA consents to a particular payment does not mean that the approving entity or the receiver will be responsible for making the payments in the event of a receivership or that the recipient will receive some sort of preference over other creditors from the receivership.

Enforcement

The statute at 12 U.S.C. 2277a–10b(b) grants the FCSIC authority to prohibit golden parachute and indemnity payments by regulation or order. The Board believes that a regulation proscribing limits, defining ''troubled condition'' and setting out procedures for seeking approval of a payment that is not specified in one of the exceptions is usually preferable to a case-by-case approach. Nevertheless, FCSIC could deal with abuses on a case-by-case basis through an enforcement proceeding.

The proposed regulation is similar to the regulations of the other Federal financial regulators with similar statutory authority. *See, e.g.*, 12 CFR part 359. Rather than prohibit all the golden parachute payments above a certain threshold, the proposed regulation allows a Farm Credit System institution that is in a troubled condition, as defined in the regulation, to seek approval for an otherwise prohibited golden parachute payment to an IRP. Similarly, the proposal rule on indemnity payments seeks a rational and fair approach for determining indemnification in order to avoid abuses.

The statute at 12 U.S.C. 2277a–10b(c) provides that FCSIC ''shall prescribe, by regulation, the factors to be considered by the Corporation in taking any action under subsection (b) [its authority to prohibit or limit golden parachute payments and indemnity payments]. The section also sets out a number of illustrative factors that may be considered when taking action under subsection (b): For Example, whether an IRP has committed acts of fraud, breach of fiduciary duty, or insider abuse that has had a detrimental effect on the financial condition of the institution; whether there is a reasonable basis to believe that the IRP has violated the law or regulations; whether the IRP was in a position of managerial or fiduciary responsibility; and the length of time the party was related to the institution and the reasonableness of the compensation. In addition, section 2277a–10b(d) specifies that certain payments are prohibited. No Farm Credit System institution may prepay the salary or any liability or legal expense of any IRP if the payment is made in contemplation of insolvency or such payment has the result of preferring one creditor over another.

The Corporation has considered the prohibited payments and the illustrative factors in preparing its proposed regulation. It has also reviewed the legislative history of the Reform Act and the Comprehensive Thrift and Bank Fraud Prosecution and Taxpayer Recovery Act of 1990 (the Fraud Act), which added similar authority for the Federal Deposit Insurance Corporation in a new section 18(k)(1) to the Federal Deposit Insurance Act. Public Law. 101–647, Sec. 2523 (1990). The Corporation is aware that the Federal financial regulators have encountered abuses with golden parachutes when institutions pay substantial sums to top executives who resign after an institution is troubled or immediately before the institution is sold. Ultimately, the Corporation has concluded that to avoid such abuses golden parachute payments should be prohibited for Farm Credit System institutions that are in a troubled condition, as defined in the regulation, except under the circumstances set forth in the proposed rule. If an institution in a troubled condition or an IRP wants to make a payment or enter into an agreement that it believes should not be prohibited and the payment or agreement is not covered by one of the exceptions specified in the regulation, it may seek approval from FCA and FCSIC. When it does, the regulation requires the institution or IRP to address some of the factors listed in the statute so that the FCA and FCSIC can consider them in determining whether the proposed payment or agreement should be allowed, limited or prohibited. The Corporation believes this rule will best protect the financial integrity of the institution and safeguard its assets as Congress intended.

In issuing the proposed indemnification rule, the Corporation has considered the prohibited payments and the illustrative factors set out in the statute as well as the legislative history. The Corporation believes that individuals that violate the law or regulations should pay penalties out of their own pockets and not be reimbursed by a Farm Credit System institution. The Corporation believes that this proposed regulation on indemnification payments preserves the deterrent effects of administrative enforcements and civil actions even though it does not prohibit all indemnification payments.

As noted, the proposal sets forth circumstances under which indemnification payments may be made. For example, the Corporation has decided to allow indemnification ''up front'' for an IRP's legal or other professional expenses if: (1) Its board of directors determines that the party requesting indemnification acted in good faith, (2) the payment will not materially adversely affect the institution, and (3) the person agrees in writing to reimburse the institution if the alleged violations of law, regulation or fiduciary duty are upheld. If these criteria are met, the institution's board of directors will have concluded in good faith that the party requesting indemnification did not commit a fraudulent act, insider abuse or some other actionable offense that had a material adverse effect on the financial

condition of the institution. Consideration of these factors in this regulatory requirement is what Congress intended FCSIC to do in taking action under section 5.61B(b) and (c) (12 U.S.C. 2277a–10b(b) and (c)). Also, the Corporation has decided to permit partial indemnification for that portion of the liability or legal expenses incurred where there is a determination on part of the charges in favor of the IRP. Finally, an institution may purchase insurance to cover expenses other than judgments or penalties.

FCSIC's authority to regulate golden parachutes and indemnity payments is in addition to FCA's safety and soundness enforcement authority pursuant to the Farm Credit Act of 1971, as amended. Furthermore, nothing in this regulation limits the powers, functions, or responsibilities of the FCA.

List of Subjects in 12 CFR Part 1412

Banks, banking, Golden parachute payment, Indemnification payment, Institution-related party, Penalties, Prohibitions.

For the reasons set out in the preamble, 12 CFR part 1412 is proposed to be added as set forth below.

PART 1412—GOLDEN PARACHUTE AND INDEMNIFICATION PAYMENTS

Sec.

1412.1 Scope.
1412.2 Definitions.
1412.3 Golden parachute payments prohibited.
1412.4 Prohibited indemnification payments.
1412.5 Permissible golden parachute payments.
1412.6 Permissible indemnification payments.
1412.7 Filing instructions.
1412.8 Applicable in the event of receivership.

Authority: 12 U.S.C. 2277a–10b.

§ 1412.1 Scope.

(a) This regulation limits and/or prohibits, in certain circumstances, the ability of Farm Credit System (System) institutions, their service corporations, subsidiaries and affiliates from making golden parachute and indemnification payments to institution-related parties (IRPs).

(b) This regulation applies to System institutions in a troubled condition that seek to make golden parachute payments to their IRPs.

(c) The limitations on indemnification payments apply to all System institutions, their service corporations, subsidiaries and affiliates regardless of their financial health.

§ 1412.2 Definitions.

(a) *Act* or *Farm Credit Act* means Farm Credit Act of 1971 (12 U.S.C. 2002(a)), as amended by the Farm Credit System Reform Act of 1996, amending 12 U.S.C. 2277a–10.

(b) *Farm Credit System institution or System institution* means any ''institution'' enumerated in section 1.2 of the Act including, but not limited to, associations, banks, service corporations, the Federal Farm Credit Banks Funding Corporation, the Farm Credit Leasing Services Corporation and their subsidiaries and affiliates, as well as, the Federal Agricultural Mortgage Corporation and its subsidiaries and affiliates, as described in 12 U.S.C. 2279aa-1(a).

(c) *Benefit plan* means any plan, contract, agreement or other arrangement which is an ''employee welfare benefit plan'' as that term is defined in section 3(1) of the Employee Retirement Income Security Act of 1974, as amended (29 U.S.C. 1002(1)), or other usual and customary plans such as dependent care, tuition reimbursement, group legal services or other benefits provided under a cafeteria plan sponsored by the System institution; provided however, that such term shall not include any plan intended to be subject to paragraph (f)(2)(iii), (vii) and (viii) of this section.

(d) *Bona fide deferred compensation plan or arrangement* means any plan, contract, agreement or other arrangement whereby:

(1) An IRP voluntarily elects to defer all or a portion of the reasonable compensation, wages or fees paid for services rendered which otherwise would have been paid to such party at the time the services were rendered (including a plan that provides for the crediting of a reasonable investment return on such elective deferrals) and the System institution either:

(i) Recognizes compensation expense and accrues a liability for the benefit payments according to generally accepted accounting principles (GAAP); or

(ii) Segregates or otherwise sets aside assets in a trust which may only be used to pay plan and other benefits, except that the assets of such trust may be available to satisfy claims of the System institution's creditors in the case of insolvency; or

(2) The System institution establishes a nonqualified deferred compensation or supplemental retirement plan, other than an elective deferral plan described in paragraph (d)(1) of this section:

(i) Primarily for the purpose of providing benefits for certain IRPs in excess of the limitations on contributions and benefits imposed by sections 415, 401(a)(17), 402(g) or any other applicable provision of the Internal Revenue Code of 1986 (26 U.S.C. 415, 401(a)(17), 402(g)); or

(ii) Primarily for the purpose of providing supplemental retirement benefits or other deferred compensation for a select group of directors, management or highly compensated employees (excluding severance payments described in paragraph (f)(2)(v) of this section and permissible golden parachute payments described in § 1412.5); and

(3) In the case of any nonqualified deferred compensation or supplemental retirement plans as described in paragraphs (d)(1) and (2) of this section, the following requirements shall apply:

(i) The plan was in effect at least 1 year prior to any of the events described in paragraph (f)(1)(ii) of this section;

(ii) Any payment made pursuant to such plan is made in accordance with the terms of the plan as in effect no later than 1 year prior to any of the events described in paragraph (f)(1)(ii) of this section and in accordance with any amendments to such plan during such 1 year period that do not increase the benefits payable thereunder;

(iii) The IRP has a vested right, as defined under the applicable plan document, at the time of termination of employment to payments under such plan;

(iv) Benefits under such plan are accrued each period only for current or prior service rendered to the employer (except that an allowance may be made for service with a predecessor employer);

(v) Any payment made pursuant to such plan is not based on any discretionary acceleration of vesting or accrual of benefits which occurs at any time later than 1 year prior to any of the events described in paragraph (f)(1)(ii) of this section;

(vi) The System institution has previously recognized compensation expense and accrued a liability for the benefit payments according to GAAP or segregated or otherwise set aside assets in a trust which may only be used to pay plan benefits, except that the assets of such trust may be available to satisfy claims of the System institution's creditors in the case of insolvency; and

(vii) Payments pursuant to such plans shall not be in excess of the accrued liability computed in accordance with GAAP.

(e) *Corporation or FCSIC* mean the Farm Credit System Insurance Corporation, in its corporate capacity.

(f) *Golden parachute payment.* (1) The term ''golden parachute payment''

means any payment (or any agreement to make any payment) in the nature of compensation by any System institution for the benefit of any current or former IRP pursuant to an obligation of such System institution that:

(i) Is contingent on the termination of such party's primary employment or relationship with the System institution; and

(ii) Is received on or after, or is made in contemplation of, any of the following events:

(A) The insolvency (or similar event) of the System institution which is making the payment or bankruptcy or insolvency (or similar event) of the service corporation, subsidiary or affiliate which is making the payment; or

(B) The System institution is assigned a composite rating of 4 or 5 by the FCA; or

(C) The appointment of any conservator or receiver for such System institution; or

(D) A determination by the Corporation, that the System institution is in a troubled condition, as defined in paragraph (m) of this section; and

(iii) Is payable to an IRP whose employment by or relationship with a System institution is terminated at a time when the System institution by which the IRP is employed or related satisfies any of the conditions enumerated in paragraphs (f)(1)(ii)(A) through (D) of this section, or in contemplation of any of these conditions.

(2) *Exceptions.* The term ''golden parachute payment'' shall not include:

(i) Any payment made pursuant to a pension or retirement plan which is qualified (or is intended within a reasonable period of time to be qualified) under section 401 of the Internal Revenue Code of 1986 (26 U.S.C. 401); or

(ii) Any payment made pursuant to a benefit plan as that term is defined in paragraph (c) of this section; or

(iii) Any payment made pursuant to a ''bona fide'' deferred compensation plan or arrangement as defined in paragraph (d) of this section; or

(iv) Any payment made by reason of death or by reason of termination caused by the disability of IRP; or

(v) Any severance or similar payment which is required to be made pursuant to a state statute or foreign law which is applicable to all employers within the appropriate jurisdiction (with the exception of employers that may be exempt due to their small number of employees or other similar criteria); or

(vi) Any other payment which the Corporation determines to be permissible in accordance with § 1412.6, on permissible indemnification payments; or

(vii) Any payment made pursuant to a nondiscriminatory severance pay plan or arrangement that provides for payment of severance benefits to all eligible employees upon involuntary termination other than for cause, voluntary resignation, or early retirement. Furthermore, such severance pay plan or arrangement shall not have been adopted or modified to increase the amount or scope of severance benefits at a time when the System institution was in a condition specified in paragraph (f)(1)(ii) of this section or in contemplation of such a condition without the prior written consent of the FCA; or in lieu of a payment made pursuant to this paragraph;

(viii) Any payment made pursuant to a severance pay plan or arrangement that provides severance benefits upon involuntary termination other than for cause, voluntary resignation, or early retirement. No employee shall receive any payment under this subpart which exceeds the base compensation paid to such employee during the 12 months (or longer period or greater benefit as the Corporation shall consent to) immediately proceeding termination of employment. Furthermore, such severance pay plan or arrangement shall not have been adopted or modified to increase the amount or the scope of the severance benefits at a time when the System institution was in a condition specified in paragraph (f)(1)(ii) of this section or in contemplation of such a condition without the written approval of the FCA.

(g) The *FCA* means the Farm Credit Administration.

(h) *Institution-related party (IRP)* means:

(1) Any director, officer, employee, or controlling stockholder (other than another Farm Credit System institution) of, or agent for a System institution;

(2) Any stockholder (other than another Farm Credit System institution), consultant, joint venture partner, and any other person as determined by the FCA (by regulation or case-by-case) who participates in the conduct of the affairs of a System institution; and

(3) Any independent contractor (including any attorney, appraiser, or accountant) who knowingly or recklessly participates in any violation of any law or regulation, any breach of fiduciary duty, or any unsafe or unsound practice, which caused or is likely to cause more than a minimal financial loss to, or a significant adverse effect on, the System institution.

(i) *Liability or legal expense* means:

(1) Any legal or other professional fees and expenses incurred in connection with any claim, proceeding, or action;

(2) The amount of, and any cost incurred in connection with, any settlement of any claim, proceeding, or actions; and

(3) The amount of, any cost incurred in connection with, any judgment or penalty imposed with respect to any claim, processing, or action.

(j) *Nondiscriminatory* means that the plan, contract or arrangement in question applies to all employees of a System institution who meet reasonable and customary eligibility requirements applicable to all employees, such as minimum length of service requirements. A nondiscriminatory plan, contract or arrangement may provide different benefits based only on objective criteria such as salary, total compensation, length of service, job grade or classification, which are applied on a proportionate basis, with a modest disparity in severance benefits relating to any one criterion of 20 percent.

(k) *Payment* means:

(1) Any direct or indirect transfer of any funds or any asset;

(2) Any forgiveness of any debt or other obligation;

(3) The conferring of benefits in the nature of compensation, including but not limited to stock options and stock appreciation rights; or

(4) Any segregation of any funds or assets, the establishment or funding of any trust or the purchase of or arrangement for any letter of credit or other instrument, for the purpose of making, or pursuant to any agreement to make, any payment on or after the date on which such funds or assets are segregated, or at the time of or after such trust is established or letter of credit or other instrument is made available, without regard to whether the obligation to make such payment is contingent on:

(i) The determination, after such date, of the liability for the payment of such amount; or

(ii) The liquidation, after such date, of the amount of such payment.

(l) *Prohibited indemnification payment.* (1) The term ''prohibited indemnification payment'' means any payment (or any agreement or arrangement to make any payment) by any System institution for the benefit of any person who is or was an IRP of such System institution, to pay or reimburse such person for any civil money penalty or judgment resulting from any administrative or civil action instituted by the FCA, or any other liability or legal expense with regard to any

administrative proceeding or civil action instituted by the FCA which results in a final order or settlement pursuant to which such person:

(i) Is assessed a civil money penalty;

(ii) Is removed from office or prohibited from participating in the conduct of the affairs of the institution; or

(iii) Is required to cease and desist from or take any affirmative action with respect to such institution.

(2) *Exceptions.* (i) The term ''prohibited indemnification'' payment shall not include any reasonable payment by a System institution which is used to purchase any commercial insurance policy or fidelity bond, provided that such insurance policy or bond shall not be used to pay or reimburse an IRP for the cost of any judgment or civil money penalty assessed against such person in an administrative proceeding or civil action commenced by the FCA, but may pay any legal or professional expenses incurred in connection with such proceeding or action or the amount of any restitution to the System institution or receiver.

(ii) The term ''prohibited indemnification payment'' shall not include any reasonable payment by a System institution that represents partial indemnification for legal or professional expenses specifically attributable to particular charges for which there has been a formal and final adjudication or finding in connection with a settlement that the IRP has not violated certain FCA laws or regulations or has not engaged in certain unsafe or unsound practices or breaches of fiduciary duty, unless the administrative action or civil proceedings has resulted in a final prohibition order against the IRP.

(m) *Troubled condition* means a System institution that:

(1) Is subject to a cease-and-desist order or written agreement issued by the FCA that requires action to improve the financial condition of the System institution or is subject to a proceeding initiated by the FCA which contemplates the issuance of an order that requires action to improve the financial condition of the institution, unless otherwise informed in writing by the FCA; or

(2) Is unable to make a timely payment of principal or interest on any insured obligation (as defined in section 5.51(3) of the Farm Credit Act; 12 U.S.C. 2277a(3)); or

(3) Is receiving assistance as described in section 5.61 of the Farm Credit Act, 12 U.S.C. 2277a–10; or

(4) Is unable to make timely payment of principal or interest on debt obligations issued under the authority of section 8.6(e)(2) of the Farm Credit Act; 12 U.S.C. 2279aa–6(e)(2) or is unable to fulfill the guarantee obligations provided under section 8.6 of the Farm Credit Act; 12 U.S.C. 2279aa–6; or

(5) Is informed in writing by the Corporation that it is in a ''troubled condition'' for purposes of the requirements of this subpart on the basis of the System institution's most recent report of condition or report of examination or other information available to the Corporation.

§ 1412.3 Golden parachute payments prohibited.

No System institution shall make or agree to make any golden parachute payment, except as provided in this part.

§ 1412.4 Prohibited indemnification payments.

No System institution shall make or agree to make any prohibited indemnification payment, except as provided in this part.

§ 1412.5 Permissible golden parachute payments.

(a) A System institution may agree to make or may make a golden parachute payment if and to the extent that:

(1) The FCA, with the written concurrence of the Corporation, determines that such a payment or agreement is permissible; or

(2) Such an agreement is made in order to hire a person to become an IRP either at a time when the System institution satisfies or in an effort to prevent it from imminently satisfying any of the criteria set forth in § 1412.2(f)(1)(ii), and the FCA and the Corporation consent in writing to the amount and terms of the golden parachute payment. Such consent by the Corporation and the FCA shall not improve the IRP's position in the event of the insolvency of the institution since such consent can neither bind a receiver nor affect the provability of receivership claims. In the event that the institution is placed into receivership or conservatorship, the Corporation and/or the FCA shall not be obligated to pay the promised golden parachute and the IRP shall not be accorded preferential treatment on the basis of such prior approval; or

(3) Such a payment is made pursuant to an agreement which provides for a reasonable severance payment, not to exceed 12-months' salary, to an IRP in the event of a change in control of the System institution; *provided, however*, that the System institution shall obtain the consent of the FCA prior to making such a payment and this paragraph (a)(3) shall not apply to any change in control of System institution which results from an assisted transaction as described in section 5.61 of the Farm Credit Act; 12 U.S.C. 2277a–10 or the System institution being placed into conservatorship or receivership; and

(4) A System institution or IRP making a request pursuant to paragraphs (a)(1) through (3) of this section shall demonstrate that it is not aware of any information, evidence, documents or other materials which would indicate that there is a reasonable basis to believe, at the time such payment is proposed to be made, that:

(i) The IRP has committed any fraudulent act or omission, breach of trust or fiduciary duty, or insider abuse with regard to the System institution that has had or is likely to have a material adverse effect on the institution;

(ii) The IRP is substantially responsible for the insolvency of, the appointment of a conservator or receiver for, or the troubled condition, as defined by applicable regulations concerning the System institution;

(iii) The IRP has materially violated any applicable Federal or state law or regulation that has had or is likely to have a material effect on the System institution; and

(iv) The IRP has violated or conspired to violate section 215, 657, 1006, 1014, or 1344 of title 18 of the United States Code or section 1341 or 1343 of such title affecting a Farm Credit System institution.

(b) In making a determination under paragraphs (a)(1) through (3) of this section the FCA and the Corporation may consider:

(1) Whether, and to what degree, the IRP was in a position of managerial or fiduciary responsibility;

(2) The length of time the IRP was affiliated with the System institution, and the degree to which the proposed payment represents reasonable compensation earned over the period of employment and reasonable payment for services rendered; and

(3) Any other factors or circumstances which would indicate that the proposed payment would be contrary to the intent of the Act or this part.

§ 1412.6 Permissible indemnification payments.

(a) A System institution may make or agree to make reasonable indemnification payments to an IRP with respect to an administrative proceeding or civil action initiated by the FCA if:

(1) The System institution's board of directors, in good faith, determines in writing after due investigation and consideration that the IRP acted in good faith and in a manner he/she believed to be in the best interests of the institution;

(2) The System institution's board of directors, in good faith, determines in writing after due investigation and consideration that the payment of such expenses will not materially adversely affect the institution's safety and soundness;

(3) The indemnification payments do not constitute prohibited indemnification payments as that term is defined in § 1412.2(l); and

(4) The IRP agrees in writing to reimburse the System institution, to the extent not covered by payments from insurance or bonds purchased pursuant to § 1412.2(l)(2), for that portion of the advanced indemnification payments which subsequently become prohibited indemnification payments, as defined herein.

(b) An IRP requesting indemnification payments shall not participate in any way in the board's discussion and approval of such payments; *provided, however*, that such IRP may present his/her request to the board and respond to any inquiries from the board concerning his/her involvement in the circumstances giving rise to the administrative proceeding or civil action.

(c) In the event that a majority of the members of the board of directors are named as respondents in an administrative proceeding or civil action and request indemnification, the remaining members of the board may authorize independent legal counsel to review the indemnification request and provide the remaining members of the board with a written opinion of counsel as to whether the conditions delineated in paragraph (a) of this section have been met. If independent legal counsel opines that said conditions have been met, the remaining members of the board of directors may rely on such opinion in authorizing the requested indemnification.

(d) In the event that all of the members of the board of directors are named as respondents in an administrative proceeding or civil action and request indemnification, the board shall authorize independent legal counsel to review the indemnification request and provide the board with a written opinion of counsel as to whether the conditions delineated in paragraph (a) of this section have been met. If independent legal counsel opines that said conditions have been met, the board of directors may rely on such opinion in authorizing the requested indemnification.

§ 1412.7 Filing instructions.

Requests to make excess nondiscriminatory severance plan payments and permitted golden parachute payments shall be submitted in writing to the FCA and the Corporation. The request shall be in letter form and shall contain all relevant factual information as well as the reasons why such approval should be granted.

§ 1412.8 Applicable in the event of receivership.

The provisions of this part or any consent or approval granted under the provisions of this part by the Corporation (in its corporate capacity), shall not in any way bind any receiver of a failed System institution. Any consent or approval granted under the provisions of this part by the Corporation or the FCA shall not in any way obligate such agency or receiver to pay any claim or obligation pursuant to any golden parachute, severance, indemnification or other agreement. Claims for employee welfare benefits or other benefits which are contingent, even if otherwise vested, when the Corporation is appointed as receiver for any System institution, including any contingency for termination of employment, are not provable claims or actual, direct compensatory damage claims against such receiver. Nothing in this part may be construed to permit the payment of salary or any liability or legal expense of any IRP contrary to 12 U.S.C. 2277a–10b(d).

Dated: July 13, 2004.

Jeanette C. Brinkley,

Secretary to the Board, Farm Credit System Insurance Corporation.

[FR Doc. 04–16225 Filed 7–15–04; 8:45 am]

BILLING CODE 6710–01–P

DEPARTMENT OF TRANSPORTATION

Federal Aviation Administration

14 CFR Part 39

[Docket No. FAA–2004–18593; Directorate Identifier 2004–NM–21–AD]

RIN 2120–AA64

Airworthiness Directives; Airbus Model A300 B2, A300 B4, A300 B4–600, and A300 B4–600R Series Airplanes; and Model A300 C4–605R Variant F and A300 F4–605R Airplanes

AGENCY: Federal Aviation Administration (FAA), DOT.

ACTION: Notice of proposed rulemaking (NPRM).

SUMMARY: The FAA proposes to supersede an existing airworthiness directive (AD) for all Airbus Model A300 B4–601, A300 B4–603, A300 B4–620, A300 B4–605R, A300 B4–622R, and A300 F4–605R airplanes. That AD currently requires repetitive inspections for cracking in the area surrounding certain fuselage attachment holes, installation of new fasteners for certain airplanes, and certain follow-on corrective actions if necessary. This proposed AD would require modifying certain fuselage frames, which would terminate certain repetitive inspections. This proposed AD would also add airplanes to the applicability. This proposed AD is prompted by the development of a modification intended to prevent cracking of the center section of the fuselage, which could result in a ruptured frame foot and reduced structural integrity of the airplane.

DATES: We must receive comments on this proposed AD by August 16, 2004.

ADDRESSES: Use one of the following addresses to submit comments on this proposed AD.

- DOT Docket web site: Go to *http://dms.dot.gov* and follow the instructions for sending your comments electronically.
- Government-wide rulemaking web site: Go to *http://www.regulations.gov* and follow the instructions for sending your comments electronically.
- Mail: Docket Management Facility; U.S. Department of Transportation, 400 Seventh Street, SW., Nassif Building, Room PL–401, Washington, DC 20590.
- Fax: (202) 493–2251.
- Hand Delivery: Room PL–401 on the plaza level of the Nassif Building, 400 Seventh Street, SW., Washington, DC, between 9 a.m. and 5 p.m., Monday through Friday, except Federal holidays.

For the service information identified in this proposed AD, contact Airbus, 1

Rond Point Maurice Bellonte, 31707 Blagnac Cedex, France.

You can examine the contents of this AD docket on the Internet at *http://dms.dot.gov,* or at the Docket Management Facility, U.S. Department of Transportation, 400 Seventh Street, SW., room PL–401, on the plaza level of the Nassif Building, Washington, DC.

FOR FURTHER INFORMATION CONTACT: Dan Rodina, Aerospace Engineer, International Branch, ANM–116, Transport Airplane Directorate, 1601 Lind Avenue, SW., Renton, Washington 98055–4056; telephone (425) 227–2125; fax (425) 227–1149.

SUPPLEMENTARY INFORMATION:

Docket Management System

We have implemented new procedures for maintaining AD dockets electronically. As of May 17, 2004, new AD actions are posted on DMS and assigned a docket number. We track each AD action and assign an additional identifier, which identifies the directorate issuing the action. The DMS AD docket number is in the form ''Docket No. FAA–2004–99999.'' The FAA directorate identifier is in the form ''Directorate Identifier 2004–NM–999–AD.'' Each DMS AD docket also lists the directorate identifier (''Old Docket Number'') as a cross-reference for searching purposes.

Comments Invited

We invite you to submit any written relevant data, views, or arguments regarding this proposal. Send your comments to an address listed under **ADDRESSES.** Include ''Docket No. FAA–2004–18593; Directorate Identifier 2004–NM–21–AD'' at the beginning of your comments. We specifically invite comments on the overall regulatory, economic, environmental, and energy aspects of the proposed AD. We will consider all comments received by the closing date and may amend the proposed AD in light of those comments.

We will post all comments we receive, without change, to *http://dms.dot.gov,* including any personal information you provide. We will also post a report summarizing each substantive verbal contact with FAA personnel concerning this proposed rulemaking. Using the search function of our docket web site, anyone can find and read the comments in any of our dockets, including the name of the individual who sent the comment (or signed the comment on behalf of an association, business, labor union, etc.). You can review the DOT's complete Privacy Act Statement in the **Federal Register** published on April 11, 2000 (65 FR 19477–78), or you may visit *http://dms.dot.gov.*

We are reviewing the writing style we currently use in regulatory documents. We are interested in your comments on whether the style of this document is clear, and your suggestions to improve the clarity of our communications that affect you. You can get more information about plain language at *http://www.faa.gov/language* and *http://www.plainlanguage.gov.*

Examining the Dockets

The AD docket contains the proposed AD, comments, and any final disposition. You can examine the AD docket in person at the Docket Management Facility office between 9 a.m. and 5 p.m., Monday through Friday, except Federal holidays. The Docket Management Facility office (telephone (800) 647–5227) is located on the plaza level of the Nassif Building at the DOT street address stated in the **ADDRESSES** section. Comments will be available in the AD docket shortly after the DMS receives them.

Discussion

On March 22, 2001, we issued AD 2001–06–10, amendment 39–12157 (66 FR 17490, April 2, 2001), for all Airbus Model A300 B4–601, A300 B4–603, A300 B4–620, A300 B4–605R, A300 B4–622R, and A300 F4–605R airplanes. That AD requires repetitive high-frequency eddy-current (HFEC) or rototest inspections to detect cracking in the area surrounding the frame feet attachment holes between fuselage frame (FR) 41 and FR46, installation of new fasteners for certain airplanes, and follow-on corrective actions if necessary. That AD was prompted by issuance of mandatory continuing airworthiness information by the airworthiness authority for France. We issued AD 2001–06–10 to prevent cracking of the center section of the fuselage, which could result in a ruptured frame foot and reduced structural integrity of the airplane.

Related AD

AD 96–13–11, amendment 39–9679 (61 FR 35122, July 5, 1996), requires revising the supplemental structural inspection program for all Airbus Model A300 B2 and A300 B4 series airplanes.

Actions Since Existing AD Was Issued

Since we issued AD 96–13–11 and AD 2001–06–10, the Direction Générale de l'Aviation Civile (DGAC), which is the airworthiness authority for France, advises that the unsafe condition identified in AD 2001–06–10 may also exist on all Airbus Model A300 B2 and A300 B4 series airplanes. In addition, Airbus has developed a new modification that will improve the life of the frame feet attachments.

Relevant Service Information

Airbus has issued Service Bulletins A300–53–0271, Revision 03 (for Model A300 B2 and B4 series airplanes), and A300–53–6125, Revision 01 (for affected Model A300–600 series airplanes), both dated June 13, 2003. The service bulletins describe procedures for modifying certain fuselage frames (FRs). The inspection thresholds range from 6,800 to 56,200 flight cycles, or 14,100 to 62,400 flight hours. The modification involves the following actions:

- Cold expanding fastener holes of the frames on the center box upper fuselage bent sections, between FR41 and FR54 for Model A300 B2 and A300 B4 series airplanes, and between FR41 and FR46 for the affected Model A300–600 series airplanes;
- Inspecting for cracks using rotating-probe and eddy-current methods;
- Repairing certain crack conditions; and
- Flap peening certain frames or reaming certain holes.

The service bulletins recommend contacting Airbus for repair instructions for:

- Holes that exceed certain limits;
- Holes that were previously repaired by installing bushes;
- Cracks found during the rotating probe inspection on Model A300 series airplanes; and
- Cracks found during the rotating probe inspection that exceed certain limits on the affected Model A300–600 series airplanes.

For the affected Model A300–600 series airplanes, the modification eliminates the need for the repetitive inspections specified in Airbus Service Bulletin A300–53–6122 (and required by AD 2001–06–10).

For Model A300 B2 and A300 B4 series airplanes, the modification eliminates the need to repeat the inspection of the frame feet holes for frames 41 to 46, as specified in Airbus Service Bulletin A300–53–0345; and frames 48 to 54, as specified in Airbus Service Bulletin A300–53–238. However, Service Bulletin A300–53–0271 recommends that operators continue to repeat the inspection of the frame foot angle radius (as specified in Service Bulletin A300–53–238). Those inspections are required by AD 96–13–11.

We have determined that accomplishment of the actions specified in Service Bulletins A300–53–6125 and

A300–53–0271 will adequately address the unsafe condition. The DGAC mandated the service bulletins and issued French airworthiness directives F–2004–001 and F–2004–002, both dated January 7, 2004, to ensure the continued airworthiness of these airplanes in France.

FAA's Determination and Requirements of the Proposed AD

These airplane models are manufactured in France and are type certificated for operation in the United States under the provisions of § 21.29 of the Federal Aviation Regulations (14 CFR 21.29) and the applicable bilateral airworthiness agreement. Pursuant to this bilateral airworthiness agreement, the DGAC has kept the FAA informed of the situation described above. We have examined the DGAC's findings, evaluated all pertinent information, and determined that AD action is necessary for airplanes of this type design that are certificated for operation in the United States.

Therefore, we are proposing this AD, which would supersede AD 2001–06–10. For Model A300–600 series airplanes, this proposed AD would continue to require repetitive high-frequency eddy-current or rototest inspections for cracking in the area surrounding the frame feet attachment holes between FR41 and FR46, installation of new fasteners for certain airplanes, and certain investigative/corrective actions if necessary. This proposed AD would require modification of certain fuselage frames, which would terminate certain repetitive inspections, and add airplanes to the applicability. The proposed AD would require using the service information described previously to perform these actions, except as discussed under ''Differences Between the Proposed AD and the Service Information.''

Difference Between the Proposed AD and the Service Information

Service Bulletins A300–53–6125 and A300–53–0271 specify that operators may contact the manufacturer for certain instructions associated with the modification. The service bulletins specify this for holes that have been previously repaired in a certain way. However, this proposed AD would require operators to contact either the FAA or the DGAC (or its delegated agent) for an approved method. In light of the type of actions that would be required to address the unsafe condition, and consistent with existing bilateral airworthiness agreements, we have determined that, for this proposed AD, a modification approved by either the FAA or the DGAC would be acceptable for compliance with this proposed AD.

Additional Changes to Existing AD

This proposed AD would retain the requirements of AD 2001–06–10. Since AD 2001–06–10 was issued, the AD format has been revised and certain paragraphs have been rearranged. As a result, the corresponding paragraph identifiers for the retained requirements have changed in this proposed AD, as listed in the following table.

REIDENTIFIED PARAGRAPHS

Paragraph identifier in AD 2001–06–10	New paragraph identifier in this proposed AD
(a)	(f)
(b)	(g)
(c)	(h)

Revised Labor Rate

We have reviewed the figures we have used over the past several years to calculate AD costs to operators. To account for various inflationary costs in the airline industry, we find it necessary to increase the labor rate used in these calculations from $60 per work hour to $65 per work hour. The cost impact information, below, reflects this increase in the specified hourly labor rate.

Costs of Compliance

The following table provides the estimated costs for U.S. operators to comply with this proposed AD:

ESTIMATED COSTS

Action	Model	Work hours	Labor rate per hour	Parts cost	Cost per airplane	Number of U.S.-registered airplanes	Fleet cost
Inspection	A300–600	6	$65	$0	$390, per inspection.	106	$41,340, per inspection.
Modification	A300	90	65	2,000	7,850	24	188,400.
Modification	A300–600	56	65	4,000	7,640	106	809,840.

Regulatory Findings

We have determined that this proposed AD would not have federalism implications under Executive Order 13132. This proposed AD would not have a substantial direct effect on the States, on the relationship between the national Government and the States, or on the distribution of power and responsibilities among the various levels of government.

For the reasons discussed above, I certify that the proposed regulation:

1. Is not a ''significant regulatory action'' under Executive Order 12866;

2. Is not a ''significant rule'' under the DOT Regulatory Policies and Procedures (44 FR 11034, February 26, 1979); and

3. Will not have a significant economic impact, positive or negative, on a substantial number of small entities under the criteria of the Regulatory Flexibility Act.

We prepared a regulatory evaluation of the estimated costs to comply with this proposed AD. See the **ADDRESSES** section for a location to examine the regulatory evaluation.

List of Subjects in 14 CFR Part 39

Air transportation, Aircraft, Aviation safety, Safety.

The Proposed Amendment

Accordingly, under the authority delegated to me by the Administrator, the Federal Aviation Administration proposes to amend 14 CFR part 39 as follows:

PART 39—AIRWORTHINESS DIRECTIVES

1. The authority citation for part 39 continues to read as follows:

Authority: 49 U.S.C. 106(g), 40113, 44701.

§ 39.13 [Amended]

2. The FAA amends § 39.13 by removing amendment 39–12157 (66 FR

17490, April 2, 2001) and adding the following new airworthiness directive (AD):

Airbus: Docket No. FAA–2004–18593; Directorate Identifier 2004–NM–21–AD.

Comments Due Date

(a) The Federal Aviation Administration (FAA) must receive comments on this airworthiness directive (AD) action by August 16, 2004.

Affected ADs

(b) This AD supersedes AD 2001–06–10, amendment 39–12157. Paragraph (i) of this AD terminates certain requirements of AD 96–13–11, amendment 39–9679.

Applicability

(c) This AD applies to all Airbus Model A300 B2, A300 B4, A300 B4–600, and A300 B4–600R series airplanes; and all Airbus Model A300 C4–605R Variant F and A300 F4–605R airplanes; certificated in any category; except those airplanes modified by Airbus Modification 12168.

Unsafe Condition

(d) This AD was prompted by the development of a modification intended to prevent cracking of the center section of the fuselage, which could result in a ruptured frame foot and reduced structural integrity of the airplane.

Compliance

(e) You are responsible for having the actions required by this AD performed within the compliance times specified, unless the actions have already been done.

Restatement of Certain Requirements of AD 2001–06–10

Inspections

(f) For Model A300 B4–600 and A300 B4–600R series airplanes, and Model A300 C4–605R Variant F and A300 F4–605R airplanes: Perform a high-frequency eddy-current or rototest inspection to detect cracking in the area surrounding the frame feet attachment holes between fuselage frames (FR) 41 and FR46 from stringers 24 to 28, left- and right-hand sides, in accordance with Airbus Service Bulletin A300–53–6122, dated February 9, 2000, at the time specified in paragraph (f)(1) or (f)(2), as applicable.

(1) For airplanes on which Task 53–15–54 in Maintenance Review Board Document (MRBD), Revision 3, dated April 1998, has not been accomplished as of May 7, 2001 (the effective date of AD 2001–06–10): Perform the inspection at the later of the times specified in paragraphs (f)(1)(i) and (f)(1)(ii) of this AD.

(i) Prior to the accumulation of the total flight-cycle or flight-hour threshold, whichever occurs first, specified in paragraph 1.E. (''Compliance'') of the service bulletin; or

(ii) Within the applicable grace period specified in paragraph 1.E. (''Compliance'') of the service bulletin.

(2) For airplanes on which Task 53–15–54 in the MRBD, Revision 3, dated April 1998, has been accomplished as of May 7, 2001: Perform the next repetitive inspection at the later of the times specified in paragraphs (f)(2)(i) and (f)(2)(ii) of this AD.

(i) Within the flight-cycle or flight-hour interval, whichever occurs first, specified in paragraph 1.E. (''Compliance'') of the service bulletin, following the latest inspection accomplished in accordance with the MRBD; or

(ii) Within the grace period specified in paragraph 1.E. (''Compliance'') of the service bulletin.

(g) For airplanes on which no cracking is detected during the inspection required by paragraph (f) of this AD, prior to further flight, install new fasteners as applicable, in accordance with Airbus Service Bulletin A300–53–6122, dated February 9, 2000; and repeat the inspection required by paragraph (f) of this AD thereafter at intervals not to exceed the applicable intervals specified in paragraph 1.E. (''Compliance'') of the service bulletin, until the actions required by paragraph (i) of this AD have been done.

Corrective Actions

(h) For airplanes on which cracking is detected during any inspection required by paragraph (f) of this AD: Prior to further flight, except as required by paragraph (j) of this AD, accomplish corrective actions (*e.g.*, performing rotating probe inspections, reaming out cracks, cold working fastener holes, and installing oversized fasteners) in accordance with Airbus Service Bulletin A300–53–6122, dated February 9, 2000. Repeat the inspection required by paragraph (f) of this AD thereafter at intervals not to exceed the applicable intervals specified in paragraph 1.E. (''Compliance'') of the service bulletin, until the actions required by paragraph (i) of this AD have been done.

New Requirements of This AD

Modification: All Airplanes

(i) For all airplanes: Within the compliance times specified in paragraph 1.E. of the applicable service bulletin listed in Table 1 of this AD, modify the fuselage frames in accordance with the Accomplishment Instructions of the applicable service bulletin. For airplanes that have exceeded the specified threshold, this AD requires compliance within the earlier of the flight-cycle and flight-hour grace periods specified in the service bulletin.

TABLE 1.—SERVICE INFORMATION

Airplane model	Airbus service bulletin	Required revision level	Revision level(s) also acceptable for compliance if done before the effective date of this AD
A300 B2 and and A300 B4 series airplanes	A300–53–0271	Revision 03, dated June 13, 2003.	Original, dated September 10, 1991. Revision 01, dated February 16, 1993. Revision 02, dated July 13, 2000.
A300 B4–600 and A300 B4–600R series airplanes, and A300 C4–605 Variant F and A300 F4–605R airplanes.	A300–53–6125	Revision 01, dated June 13, 2003.	Original, dated November 8, 2000.

(1) For the affected Model A300 B4–600 series airplanes: Accomplishment of the modification terminates the requirements of this AD.

(2) For Model A300 B2 and A300 B4 series airplanes: Accomplishment of the modification terminates certain repetitive inspections required by AD 96–13–11, *i.e.*, inspections of the frame feet holes for frames 41 to 46 (as specified in Airbus Service Bulletin A300–53–0345) and frames 48 to 54 (as specified in Airbus Service Bulletin A300–53–238). However, the repetitive inspections of the frame foot angle radius (as specified in Service Bulletin A300–53–238), which are required by AD 96–13–11, must continue.

Exceptions to Service Bulletin Procedures

(j) During any inspection required by this AD, if the applicable service bulletin specifies to contact the manufacturer for appropriate instructions: Before further flight, perform applicable corrective action in accordance with a method approved by the Manager, International Branch, ANM–116, Transport Airplane Directorate, FAA; or the Direction Générale de l'Aviation Civile (DGAC) (or its delegated agent).

Alternative Methods of Compliance

(k)(1) The Manager, International Branch, ANM–116, has the authority to approve

alternative methods of compliance (AMOCs) for this AD, if requested in accordance with the procedures found in 14 CFR 39.19.

(2) AMOCs approved previously in accordance with AD 2001–06–10, amendment 39–12157, are approved as AMOCs with the applicable requirements of this AD.

Related Information

(l) French airworthiness directives F–2004–001 and F–2004–02, both dated January 7, 2004, also address the subject of this AD.

Issued in Renton, Washington, on July 6, 2004.

Kevin M. Mullin,

Acting Manager, Transport Airplane Directorate, Aircraft Certification Service.

[FR Doc. 04–16174 Filed 7–15–04; 8:45 am]

BILLING CODE 4910–13–P

FEDERAL TRADE COMMISSION

16 CFR Part 698

RIN 3084–AA94

Summaries of Rights and Notices of Duties Under the Fair Credit Reporting Act

AGENCY: Federal Trade Commission.

ACTION: Publication of proposed guidance for forms, and request for public comment.

SUMMARY: The Federal Trade Commission (Commission) is publishing for public comment two summaries of rights under the Fair Credit Reporting Act (FCRA) and two notices of duties under the FCRA as required by FCRA Sections 609 and 607 respectively. Consumer reporting agencies (CRAs) will distribute these documents. The first summary is a summary of rights of identity theft victims required by Section 609(d) of the FCRA, which was added to the FCRA by the recently enacted Fair and Accurate Credit Transactions Act of 2003 (FACT Act). The Commission issued the other summary and the two notices in 1997 and is proposing revisions because of the extensive changes made to the FCRA in the FACT Act. These are a general summary of consumer rights under the FCRA, a notice of responsibilities under the FCRA of persons that furnish information to consumer reporting agencies, and a notice of responsibilities under the FCRA of persons that obtain consumer reports from consumer reporting agencies.

DATES: Written comments will be accepted until August 16, 2004.

ADDRESSES: Interested parties are invited to submit written comments. Comments should refer to ''FACTA Notices, Matter No. R411013'' to facilitate the organization of comments. A comment filed in paper form should include this reference both in the text and on the envelope, and should be mailed or delivered to the following address: Federal Trade Commission/ Office of the Secretary, Room H–159 (Annex S), 600 Pennsylvania Avenue, NW., Washington, DC 20580. The Commission is requesting that any comment filed in paper form be sent by courier or overnight service, if possible, because postal mail in the Washington area and at the Commission is subject to delay due to heightened security precautions. Commenters seeking confidential treatment for any portion of their comments must file their comments in paper form. An electronic comment can be filed using e-mail at *FCRAnotices@ftc.gov.*

Comments on any proposed filing, recordkeeping, or disclosure requirements that are subject to paperwork burden review under the Paperwork Reduction Act should be submitted to: Office of Information and Regulatory Affairs, Office of Management and Budget, Attention: Desk Officer for Federal Trade Commission. Comments should be submitted via facsimile to (202) 395–6974 because postal mail at the Office of Management and Budget is subject to lengthy delays due to heightened security precautions. Such comments should also be sent to the following address: Federal Trade Commission/ Office of the Secretary, Room H–159 (Annex S), 600 Pennsylvania Avenue, NW., Washington, DC 20580.

The Federal Trade Commission Act and other laws the Commission administers permit the collection of public comments to consider and use in this proceeding as appropriate. All timely and responsive public comments, whether filed in paper or electronic form, will be considered by the Commission, and will be available to the public on the FTC Web site, to the extent practicable, at *www.ftc.gov.* As a matter of discretion, the FTC makes every effort to remove home contact information for individuals from the public comments it receives before placing those comments on the FTC Web site. More information, including routine uses permitted by the Privacy Act, may be found in the FTC's privacy policy, at *http://www.ftc.gov/ftc/privacy.htm.*

FOR FURTHER INFORMATION CONTACT: For the summary of identity theft rights, contact Monique Einhorn, Attorney, Division of Planning and Information, Federal Trade Commission, 600 Pennsylvania Ave., NW., Washington, DC 20580, 202–326–3228; for the general summary of consumer rights and the furnisher and user notices, contact William Haynes, Attorney, Division of Financial Practices, Federal Trade Commission, 600 Pennsylvania Ave. NW., Washington, DC 20580, (202) 326–3224.

SUPPLEMENTARY INFORMATION:

Table of Contents

I. Introduction
II. Overview of Proposed Summaries and Notices
III. Invitation To Comment
IV. Communications by Outside Parties to Commissioners and Their Advisors
V. Review Under the Paperwork Reduction Act
VI. Regulatory Flexibility Act Analysis
VII. Comment Questions

I. Introduction

The Federal Trade Commission is issuing for public comment two proposed summaries of consumer rights under the FCRA and two notices of duties under the FCRA, 15 U.S.C. 1681 *et seq.* CRAs will distribute these documents. The first summary is a summary of the rights of identity theft victims under the FCRA that the Commission is required to issue by Section 609(d) of the FCRA. The second summary is a summary of general consumer rights under the FCRA that the Commission is required to issue by Section 609(c) of the FCRA. The two notices are (1) a notice of the FCRA duties of furnishers of information to CRAs and (2) a notice of the FCRA duties of users of information from CRAs. Section 607(d) requires the Commission to issue these notices.

The requirement that the Commission issue the identity theft rights summary was added to the FCRA by the FACT Act, Public Law 108–159, 117 Stat.1952. The remaining three documents are revised versions of documents first prescribed by the Commission in 1997. The Commission is issuing revised versions to reflect changes made to the FCRA by the FACT Act.

II. Overview of Proposed Summaries and Notices

The FACT Act, which was signed into law on December 4, 2003, amends the FCRA in a number of significant ways. The Act contains provisions intended to reduce the occurrence of identity theft and confers certain rights on the victims of identity theft to assist them in resolving the problems caused by identity theft. The Act also contains provisions designed to increase the accuracy of consumer reports and to

protect the rights of consumers whose personal information is collected by consumer reporting agencies and by businesses. Finally, the Act establishes uniform national standards in certain key areas. The summaries and notices being published for comment by this notice reflect the changes to the FCRA made by the FACT Act.

A. Summary of Rights of Identity Theft Victims (Appendix E)

The FACT Act added Section 609(d) to the FCRA. This provision requires the Commission to issue a summary of the rights of fraud or identity theft victims under the FCRA that will be distributed by CRAs to victims of fraud or identity theft. This summary will complement the various new provisions relating to identity theft added to the FCRA by the FACT Act.

The proposed summary, which will be Appendix E to 16 CFR part 698, discusses the major identity theft rights that consumers have under the FCRA. These are: the right to file fraud alerts (Section 605A); the right to block the reporting of information resulting from identity theft in the files of consumer reporting agencies (Section 605B); the right to prevent persons who furnish information to the CRAs from reporting information that is the result of identity theft (Section 623(a)(6)(B)); the right to obtain free file disclosures (Sections 612(c)(3) and 612(d)); and the right to obtain documents or information relating to accounts opened in the consumer's name or transactions made in the consumer's name (Sections 609(e) and 615(g)(2)). In addition, the summary informs consumers that a creditor may not sell, transfer, or place for collection a debt if the creditor has been notified that the debt is the result of identity theft (Section 615(f)(1)). The Commission has consulted with the Federal banking regulators and the National Credit Union Administration in crafting the proposed summary as required by Section 609(d).

The only identity theft-specific rights that are not discussed in the proposed summary are duties that are directed at the business community. These are: the duty of debt collectors to notify the original creditor or owner of the debt if the debt collector is notified that information in the file of a consumer may be the result of identity theft (Section 615(g)(1)); the duty of CRAs to notify the furnisher that information in the file of the consumer may be the result of identity theft and that a block has been requested (Section 605B(b)); and the duty of furnishers of information to CRAs to have in place procedures to prevent the re-furnishing of information which has been blocked under section 605B (Section 623(a)(6)(A)). Because these duties do not require any action by consumers in addition to the steps outlined in the proposed notice, the Commission believes that it is appropriate not to include these items. These duties are set forth in the ''furnisher'' and ''user'' notices discussed below. A discussion of these rights will also be on the Commission's Web site, to which the consumer summary will refer consumers.

Finally, Section 609(d) of the FACT Act requires that any summary distributed by a CRA contain ''all of the information required by the Commission.'' The Commission reads the statute as providing CRAs with flexibility in creating summaries of identity theft rights and is proposing that any summary issued by a CRA display the Commission-mandated information ''clearly and prominently'' in a form substantially similar to the Commission's model summary.

B. General Summary of Consumer Rights (Appendix F)

As added to the FCRA in 1996, Section 609(c) required the Commission to issue a model summary of consumer rights under the FCRA. The summary had to include the following: (1) A description of the FCRA and all rights of consumers under the law; (2) an explanation of how a consumer could exercise his or her rights; (3) a list of all Federal agencies responsible for enforcing the FCRA and their addresses and telephone numbers; (4) a statement that the consumer might have additional rights under State law; and (5) a statement that CRAs are not required to remove current, accurate derogatory information from consumers' files. The 1996 amendments to the FCRA required CRAs to distribute consumer rights summaries that were ''substantially similar'' to the summary created by the Commission. The Commission issued its general summary of consumer rights in July 1997. 62 FR 35586 (1997)

The recently enacted FACT Act amended Section 609(c) in a number of ways. This provision now requires that the Commission prepare a model summary of consumer rights, and mandates that the summary include an explanation of the following: (1) The consumer's right to obtain a free file disclosure each twelve months under Section 612(a) of the FCRA; (2) the frequency and circumstances under which a consumer may receive additional free disclosures under the FCRA; (3) the right of consumers to dispute incorrect or outdated information in their files; and (4) the right of consumers to obtain credit scores for a fee.

As amended by the FACT Act, Section 609(c) continues to require that CRAs notify consumers that they may have additional rights under state law and that the FCRA does not require accurate, current derogatory information to be removed from consumers' files. CRAs also must provide consumers with the list of Federal agencies responsible for enforcing the FCRA. These items are, however, no longer required to be included in the summary of rights prescribed by the Commission. Nonetheless, the Commission believes that including this information in its proposed summary would be helpful to consumers by providing in one place a description of consumer rights and the list of agencies charged with enforcing these rights. CRAs may, however, disclose the list of addresses and the two statements separately from the Commission's summary.

The Commission's proposed summary, which will be Appendix F to 16 CFR part 698, refers consumers to the FCRA portion of the Commission's Web site (*www.ftc.gov/credit*) where a more extensive discussion of the various provisions of the FCRA and consumers' rights will be set forth. The summary also provides an address where consumers may request a written copy of this additional information if they do not have access to a computer.

Another issue raised by the FACT Act amendments is whether CRAs must distribute the summary in the exact form prescribed by the Commission. The 1996 amendments required only that CRAs distribute a summary ''substantially similar'' to the Commission's model. Although Section 609(c), as amended by the FACT Act, no longer contains the ''substantially similar'' language, the provision now characterizes the Commission-prescribed disclosure as a ''model'' summary of rights. As a result, the Commission continues to read the statute to provide CRAs with flexibility to structure the disclosure as necessary and appropriate. Because the Commission's prescribed disclosure is simply a ''model,'' CRAs need not adhere to it in every detail, and a summary that is ''substantially similar'' to the Commission's model summary complies with the statutory requirement.

In addition, the Commission believes that all information must be clearly and prominently displayed. Finally, the Commission realizes that some information in the summary may change over time—for example, the permissible

charges for file disclosures and the addresses and telephone numbers of the Federal agencies. The Commission will periodically update this information on its Web site, and considers all notices with updated information to be in compliance with section 609(c).

C. Notice of Duties of Furnishers and Notice of Duties of Users (Appendix G and Appendix H)

The FACT Act did not amend Section 607(d), which requires the Commission to issue a notice setting forth the duties of furnishers of information to CRAs, and a notice outlining the duties of users of consumer reports.

The FACT Act did, however, amend Section 623 of the FCRA to add a number of new furnisher duties, including requiring compliance with ''accuracy'' guidelines to be issued by the Commission and the banking and credit union regulators, procedures that must be followed to assist in preventing and correcting identity theft, and procedures relating to the furnishing of negative information and medical information. The Commission has revised the furnisher notice, which will be Appendix G to 16 CFR part 698, to reflect these changes.

The FACT Act also amended many provisions of the FCRA that affect users. The most significant changes relate to the use of consumer reports for employment purposes, the use of medical information, the duties of resellers of consumer reports, and the procedures to be followed to protect against identity theft. The Commission has revised the user notice, which will be Appendix H to 16 CFR part 698, to reflect these changes. The ''users'' of consumer reports fall into a number of categories, and the duties imposed by the FCRA vary by user category. The Commission is proposing a single notice to be sent to all users, which specifies the general responsibilities that apply to all users of consumer reports from a CRA (Part I), and lists the responsibilities that are specific to the following categories of users: creditors and mortgage grantors (Part II); users of reports for employment purposes (Part III); users of investigative consumer reports (Part IV); users of medical information (Part VI); users of ''prescreened'' lists (Part VII); and users who are resellers (Part VIII).

Section 607(d) of the FCRA requires CRAs to provide to furnishers and users a notice of ''such person's responsibilities.'' The Commission interprets this provision as giving CRAs the option of providing notices that only list the duties that specifically apply to a particular furnisher or user. CRAs may, however, elect to provide the Commission's furnisher or user notices in their entirety to all furnishers and users.

Section 607(d) also requires that CRAs provide furnishers and users notices that are ''substantially similar'' to the notices prescribed by the Commission. The Commission believes that the changes made to furnisher and user duties by the FACT Act are significant, and render the existing furnisher and user notices obsolete. Accordingly, the Commission concludes that CRAs will need to provide revised notices to all furnishers and users in order to comply with the statutory requirement that they provide to furnishers and users a notice that is substantially similar to the notice prescribed by the Commission.

D. Distribution of Summaries and Notices

With respect to the general summary of rights, Section 609(c) makes clear that it must be provided every time a CRA makes a written file disclosure. The Commission will post minor changes in addresses, telephone numbers, and the cost of consumer reports on its Web site. CRAs may modify the summaries they distribute to reflect these changes.

Section 609(d) requires that the summary of identity theft rights be provided when consumers contact CRAs to report fraud or identity theft. The statute requires CRAs to begin distributing the summary of identity theft rights 60 days after the Commission issues the summary in final form.

The furnisher and user notices are required by Section 607(d) to be distributed on a one-time basis by CRAs. The Commission believes that the changes made by the FACT Act to the FCRA are so substantial that CRAs must distribute the revised user and furnisher notices to all current users and furnishers, as well as to all entities that become users or furnishers in the future.

III. Invitation to Comment

The Commission invites interested members of the public to submit written data, views, facts, and arguments addressing the issues raised by this Notice. Specific issues that the Commission suggests be addressed are set forth in Part VII below. Written comments must be received on or before August 16, 2004. Comments should refer to ''FACTA Notices, Matter No. R411013'' to facilitate the organization of comments. A comment filed in paper form should include this reference both in the text and on the envelope, and should be mailed or delivered to the following address: Federal Trade Commission/Office of the Secretary, Room H–159 (Annex S), 600 Pennsylvania Avenue, NW., Washington, DC 20580. The Commission is requesting that any comment filed in paper form be sent by courier or overnight service, if possible, because postal mail in the Washington area and at the Commission is subject to delay due to heightened security precautions. Commenters seeking confidential treatment for any portion of their comments must file their comments in paper form. An electronic comment may be filed by e-mail by sending the comment to *FCRAnotices@ftc.gov*.

Comments on any proposed filing, recordkeeping, or disclosure requirements that are subject to paperwork burden review under the Paperwork Reduction Act should be submitted to: Office of Information and Regulatory Affairs, Office of Management and Budget, Attention: Desk Officer for Federal Trade Commission. Comments should be submitted via facsimile to (202) 395–6974 because U.S. postal mail at the Office of Management and Budget is subject to lengthy delays due to heightened security precautions. Such comments should also be sent to the following address: Federal Trade Commission/Office of the Secretary, Room H–159 (Annex S), 600 Pennsylvania Avenue, NW., Washington, DC 20580.

The Federal Trade Commission Act and other laws the Commission administers permit the collection of public comments to consider and use in this proceeding as appropriate. All timely and responsive public comments, whether filed in paper or electronic form, will be considered by the Commission, and will be available to the public on the FTC Web site, to the extent practicable, at *www.ftc.gov.* As a matter of discretion, the FTC makes every effort to remove home contact information for individuals from the public comments it receives before placing those comments on the FTC Web site. More information, including routine uses permitted by the Privacy Act, may be found in the FTC's privacy policy, at *http://www.ftc.gov/ftc/privacy.htm.*

IV. Communications by Outside Parties to Commissioners and Their Advisors

Written communications and summaries or transcripts of oral communications respecting the merits of this proceeding from any outside party to any Commissioner or Commissioner's advisor will be placed on the public record. 16 CFR 1.26(b)(5).

V. Review Under the Paperwork Reduction Act

In accordance with the Paperwork Reduction Act of 1995 (44 U.S.C. 3506; 5 CFR 1320 Appendix A.1) (PRA), the Commission reviewed the general summary of rights and the furnisher and user notices for compliance with the PRA when it issued the summary and notices in 1997. At that time, the Commission concluded that the summary and notices consist of information that is supplied by the Federal government. Accordingly, the Commission determined that these do not constitute a ''collection of information'' as this term is defined in the regulations implementing the PRA, nor do the financial resources expended in relation to the distribution of these documents constitute a paperwork burden. *See* 5 CFR 1320.3(c)(2). The Commission has reviewed the new identity theft summary of rights, as well as the changes to the existing summary and notices that are mandated by the FACT Act amendments to the FCRA. The Commission has concluded, consistent with its analysis in 1997, that the proposed summaries and notices do not fall within the definition of ''collection of information'' covered by the PRA because they are ''[t]he public disclosure of information originally supplied by the Federal government to the recipient for the purpose of disclosure to the public * * *.'' 5 CFR 1320.3(c)(2).

VI. Regulatory Flexibility Act Analysis

The Regulatory Flexibility Act (RFA), 5 U.S.C. 601–612, requires that the Commission provide an Initial Regulatory Flexibility Analysis (IRFA) with any action that may constitute a rule unless the Commission certifies that the action will not have a significant economic impact on a substantial number of small entities. See 5 U.S.C. 603–605. The Commission concludes that the proposed summaries and notices will not have a significant economic impact on a substantial number of small entities, as discussed below. Accordingly, this document serves as notice to the Small Business Administration of the agency's certification of no effect.

To ensure the accuracy of this certification, however, the Commission requests comment on whether the proposed notices will have a significant impact on a substantial number of small entities, including specific information on the number of entities that will be covered by the proposed rules, the number of these entities that are ''small'' (*i.e.*, have average annual receipts of less than $6 million), and the average annual burden for each entity. The Commission has prepared the following analysis:

A. Description of the Reasons That Action by the Agency Is Being Taken

The agency has undertaken this proceeding to implement several provisions of the FCRA, as amended by the FACT Act. Specifically, Section 609(c) of the FCRA requires the Commission to prepare a summary of the general rights that consumers have under the FCRA (general summary of consumer rights); Section 609(d) requires the Commission to prepare a model summary of the rights of consumers under the FCRA that relate to identity theft; and Section 607(d) requires the Commission to issue notices of the duties under the FCRA of persons that furnish information to CRAs and of persons that use information obtained from CRAs. All of these documents will be distributed by CRAs.

B. The Proposal's Objectives and Legal Basis

The objective of the Commission's action is the issuance of proposed summaries and notices to educate consumers, furnishers of information to CRAs, and users of information from CRAs as to their rights or duties under the FCRA. As noted earlier, the legal bases for the proposed notices are Sections 607(d) (notices of duties of users and furnishers), 609(c) (general summary of consumer rights), and 609(d) (summary of identity theft rights) of the FCRA.

C. Small Entities to Which the Proposed Rule Will Apply

The proposed summaries and notices are to be distributed by CRAs. The definition of a ''small'' CRA is currently one with less than $6 million in average annual receipts (*see www.sba.gov/size*).

The consumer reporting industry is composed primarily of ''nationwide'' CRAs and ''nationwide specialty'' CRAs, as defined in FCRA Sections 603(p) and 603(w), respectively. The Commission estimates, based on its own experience and knowledge of industry practices and members, that there are three nationwide CRAs and fewer than 50 nationwide specialty CRAs currently doing business in the U.S. The Commission believes that none of the nationwide CRAs are ''small'' entities. Further, the Commission believes it is likely, but has been unable to confirm, that none of the nationwide specialty CRAs are small entities.

There are, however, small CRAs associated with the nationwide CRAs, and there are small independent CRAs. Based on the membership of the major CRA trade associations, the Commission believes that the total universe of entities potentially covered by the requirement to distribute summaries and notices is between 1000 and 1400. As is discussed below, the Commission believes that the nationwide and nationwide specialty CRAs will be responsible for much of the distribution of the summaries and notices. The Commission invites comments on the number of ''small'' entities that will be affected by its proposal.

D. Projected Reporting, Recordkeeping, and Other Compliance Requirements

The proposed rule would impose no reporting or recordkeeping requirements. CRAs will be required, however, to distribute the prescribed summaries and notices. The summary of identity theft rights (Section 609(d)) will be distributed to all consumers who contact the CRAs to report that they may be the victim of fraud or identity theft. The general summary of consumer rights (Section 609(c)) will be distributed with each written disclosure made by CRAs. Both of these summaries will be distributed to large numbers of consumers each year. By contrast, the notices of user and furnisher duties (Section 607(d)) need be distributed only on a one-time basis to all of the entities that furnish information to a CRA or use information obtained from a CRA.

As discussed above, CRAs have distributed the general summary of rights and the furnisher and user notices since 1997. The revised general summary and the revised furnisher and user notices will simply maintain, and not increase in any significant way, the burdens already imposed on CRAs by these notice requirements. The additional requirement to distribute a summary of identity theft rights, however, will impose some new burdens and costs on CRAs, although the Commission believes they will be minimal.

CRAs must provide the required summary of identity theft rights to consumers when they contact CRAs to report fraud or identity theft. There should be few instances, however, in which this summary will be the only information the CRA is distributing to consumers. Rather, in most cases, when consumers report fraud or identity theft, CRAs will be responding either by sending a copy of their file or engaging in other ongoing communications with consumers in an attempt to resolve their identity theft problems. CRAs may be reasonably expected to economize on

the costs of transmitting the required summary of identity theft rights to consumers by including the summary as part of such communications with consumers.

Thus, the Commission believes that the distribution costs for the identity theft rights summaries are likely to be a small increment to the overall cost of handling fraud and identity theft complaints from consumers. Moreover, because the Commission is providing the language for the summary, businesses need not incur legal or other professional costs to develop any written material. The cost of training employees, if any, should be minimal. When the document is distributed electronically, the Commission believes that the distribution costs will be negligible. The cost of distributing the summary will be greatest where the summary is mailed. Even here, however, the cost will be a small increment to the costs associated with handling the contact with the consumer, as explained earlier. The Commission estimates that the incremental cost of including the document in other material that is mailed to a consumer will be $.25 for each mailing, because including the summary with other material should require little clerical effort and no additional postage. In the rare instance where the summary is the only item mailed to the consumer, the Commission estimates the incremental cost at $.50 per mailing because of the cost of handling and postage. This estimate assumes that little staff time will be required to provide summaries in addition to the staff time that will be devoted to dealing with each consumer's problem. The Commission believes that the cost of preparing and printing notices will be minimal because the notice is very short and the content is being provided by the Commission.

With respect to small entities, the total annual cost of complying with the requirement to distribute the summary of identity theft rights will ultimately depend upon the number of summaries that are distributed each year by ''small'' CRAs. The Commission is currently unaware of any comprehensive data showing how frequently consumers contact the small CRAs regarding fraud, identity theft, or other matters. Even without such data, however, the Commission believes that, overall, the burden of providing these summaries will fall upon the nationwide and nationwide specialty CRAs. In that regard, most of the government's consumer education efforts to date, as well as the Commission's proposed summary of identity theft rights, explains that the FCRA requires the nationwide CRAs, not the ''small'' CRAs, to place fraud alerts on consumers' files when consumers are victims of identity theft. As a result, the Commission believes that most consumers who suspect fraud or identity theft are likely to contact the nationwide CRAs, rather than the ''small'' CRAs. In those cases, the nationwide CRAs, which are not ''small'' for purposes of this analysis, would be providing consumers with their required summary of identity theft rights.[1]

Accordingly, the Commission believes that the total incremental cost of the distribution of the consumer summary for small CRAs will be relatively minimal. These costs may be incurred by small CRAs associated with nationwide CRAs where, for some reason, the consumer contacts the small CRA and not the nationwide CRA, by resellers of reports from the nationwide CRAs, and by small regional or local entities providing criminal records, driving records, and tenant screening services. The Commission invites comments on its analysis and on the costs imposed on small entities by the requirement to distribute summaries of identity theft rights.

E. Duplicative, Overlapping, or Conflicting Federal Rules

The Commission has not identified any other federal statutes, rules, or policies that would duplicate, overlap, or conflict with the proposed notices. The Commission invites comment and information on this issue.

F. Significant Alternatives to the Proposed Rule

In some situations, the Commission has considered adopting a delayed effective date for small entities subject to new regulation in order to provide them with additional time to come into compliance. In this case, however, small entities will be given the texts of the proposed summaries and notices to be distributed. In the case of the summary of identity theft rights, the distribution of which is a new burden being imposed on small entities, the Commission believes that the impact of the distribution will be minimal. The Commission, however, seeks comment and information with regard to (1) the existence of small business entities for which distribution of the required summaries and notices would have a significant economic impact; and (2) suggested alternative methods of compliance that, consistent with the statutory requirements, would reduce the economic impact of the requirements of this proceeding on these entities. If the comments filed in response to this notice identify small entities that are significantly affected, as well as alternative methods of compliance that would reduce the economic impact on such entities, the Commission will consider the feasibility of such alternatives.

VII. Questions for Comment on the Proposed Summaries and Notices

The Commission seeks comment on the proposed summaries and notices. The Commission is particularly interested in comments in the following areas:

A. Summary of Identity Theft Rights of Consumers (Appendix E)

1. *Completeness and Reference to Commission Web sites.* The Commission has sought to include enough information in the summary to effectively assist consumers who are the victims of identity theft and to refer consumers to the Commission's Web site for more information. Is it appropriate and useful to refer consumers to the Commission's Web sites for more information?

2. *Statutorily-Required Items.* Section 609(d) states only that the Commission must issue a model summary of rights, but does not identify specific items to be included. Has the Commission included all of the rights that should be included in the summary?

3. *Understandability of Summary.* Since the identity theft summary is intended for consumers, the Commission has tried to use, as much as possible, non-technical terms that will be understood by consumers. Has the Commission succeeded? Are there areas where the understandability of the summary may be improved?

B. General Summary of Consumer Rights (Appendix F)

1. *Effectiveness of Current Notice.* The current summary of consumer rights has been in place for nearly seven years. The Commission welcomes any comments as to whether the summary has been effective in informing consumers about their rights under the FCRA, and whether the effectiveness of the summary may be improved.

2. *Completeness and Reference to Commission Web site.* The

[1] Many local or regional CRAs are associated with the nationwide CRAs identified in the proposed summary of identity theft rights. It is possible some nationwide CRAs by contract may pass on to the small associated CRAs some or all of the cost of distributing summaries to consumers whose records are controlled by the small CRA. The Commission invites comments and information on this topic.

Commission's goal is to have a summary that is both informative and user friendly for consumers. The proposed summary refers consumers to the Commission's Web site for additional information. An address is also provided for consumers to request additional information if they do not have access to a computer. Does the proposed summary meet the Commission's goal? Please identify any specific sections of the proposed summary that are too brief or incomplete to be understood by consumers. Is it useful to provide references to the Commission's Web site for more detailed information, and to provide an address to write to in order to request more information? Does this approach disadvantage any significant group of consumers? What alternative approaches are available?

3. *Statutorily-Required Items.* Section 609(c) was significantly modified by Congress in the FACT Act. Some items of information that were required in the pre-FACT Act disclosure are no longer required to be included in the Commission's model summary, but CRAs nonetheless must continue to disclose this information. In addition, Congress required new items of information to be included in the Commission's model summary. The Commission has elected to include the new information required by the FACT Act in the proposed summary and to retain all of the information in the existing summary—even though some of the information may now be disclosed separately. Is this approach appropriate?

4. *Understandability of Notice.* Because the summary is a document intended for consumers, the proposal is written in non-technical language. Are there sections that can be improved by simplifying the presentation to make it easier for consumers to understand? Are there sections where the language does not accurately convey the substance of the provision? How could such sections be improved? Should more information be included in the notice?

5. *Form and Distribution.* Section 609(c)(2) requires CRAs to provide with each written file disclosure the Commission's summary of rights. The goal is to create a notice that sets forth all statutorily required items in a form that is readable, understandable, and attractive. Generally, is there a format that would better convey the same information to consumers? If so, what is it and what costs would it entail? Is there a format that would convey the same information to consumers in a less expensive manner? If so, what is it and what cost savings would it achieve?

C. Furnisher Notice (Appendix G)

1. *Content of Notice.* The proposed furnisher notice summarizes the responsibilities imposed upon furnishers of information to CRAs by Section 623 of the FCRA. Is the presentation accurate and understandable? In what ways can it be improved? Is it sufficient for the notice to refer furnishers to the complete text of the FCRA at the Internet Web site maintained by the Commission? Would the notice be improved if the Commission added the complete text of Section 623?

2. *Terminology.* The Commission's proposed notice is written in non-technical language, but with the expectation that most regular providers of information to CRAs will be relatively sophisticated and will be able to understand both the language of the statute and the description of duties. Is the description accurate and understandable for this audience? What improvements can be made?

D. User Notice (Appendix H)

1. *Number of Notices.* The Commission is proposing the content of a notice to be sent by CRAs to all users of information. CRAs will have the option of sending the notice in the form published by the Commission or sending a notice that lists only the duties of the user that will receive the notice. Should this procedure be followed? Can CRAs easily determine through the certifications they receive from users which portions of the proposed notice are applicable to which users?

2. *Content of Notice.* The proposed notice discusses the principal portions of the FCRA that impose obligations upon all those who receive consumer reports. Should additional information be included in the notice? Will the length of the notice impose substantial burdens upon CRAs in distributing the notice? Are there ways to modify the notice to reduce this burden?

3. *Terminology.* The Commission expects that user notices will be sent to a wide range of users and that these persons will have varying degrees of legal sophistication. Are the duties set forth in the proposed notice clear and understandable? Can the description of the duties be improved?

List of Subjects in 16 CFR Part 698

Fair Credit Reporting Act, Consumer reports, Consumer reporting agencies, Credit, Trade practices.

Accordingly, pursuant to 15 U.S.C. 1681e, 1681g, and 1681j, and Public Law 108–159, sec. 211(d), the Federal Trade Commission hereby proposes to amend Part 698 of subchapter F of chapter I of title 16, Code of Federal Regulations (which was added at 69 FR 35500 (June 24, 2004), and which becomes effective on December 1, 2004), as follows:

1. Revise the authority to read as follows:

Authority: 15 U.S.C. 1681e, 1681g, 1681s, and 1681j; 117 Stat. 1952; Pub. L. 108–159, sections 151, 153, 211(c) and (d), 213, and 311.

2. Revise the heading of Part 698 to read as follows:

PART 698—SUMMARIES OF CONSUMER RIGHTS, NOTICE OF USER RESPONSIBILITIES, AND NOTICE OF FURNISHER RESPONSIBILITIES UNDER THE FAIR CREDIT REPORTING ACT

3. Revise section 698.1 to read as follows:

§ 698.1 Authority and purpose.

(a) *Authority.* This part is issued by the Commission pursuant to the provisions of the Fair Credit Reporting Act (15 U.S.C. 1681 *et seq.*), as amended by the Consumer Credit Reporting Reform Act of 1996 (Title II, Subtitle D, Chapter 1, of the Omnibus Consolidated Appropriations Act for Fiscal Year 1997), Pub. L. 104–208, 110 Stat. 3009–426 (Sept. 30, 1996), and the Fair and Accurate Credit Transactions Act of 2003, Pub. L. 108–159, 117 Stat. 1952 (Dec. 4, 2003).

(b) *Purpose.* The purpose of this part is to comply with sections 607(d), 609(c), 609(d), and 612(a) of the Fair Credit Reporting Act, as amended by the Fair and Accurate Credit Transactions Act of 2003, and Section 211 of the Fair and Accurate Credit Transactions Act of 2003.

4. Revise section 698.2 to read as follows:

§ 698.2 Legal effect.

The issuance of the summaries and notices set forth below carries out the directive in the statute that the FTC prescribe these summaries and notices. Consumer reporting agencies that distribute summaries and notices as set forth below will be in compliance.

5. Add Appendices E through H to read as follows:

Appendix E to Part 698—Summary of Consumer Identity Theft Rights

The prescribed form for this summary is a disclosure that clearly and prominently contains the information set forth in the Commission's model summary. A summary may accurately reflect changes to those items (such as

telephone numbers) that may change over time and remain in compliance.

Remedying the Effects of Identity Theft: Summary of Consumer Rights Under the Fair Credit Reporting Act

You are receiving this information because you have notified a consumer reporting agency that you believe you are a victim of identity theft. Identity theft occurs when someone uses your name, Social Security number, date of birth, or other identifying information, without lawful authority, to commit fraud, such as opening a credit card account or obtaining a loan in your name. For more information, visit *www.consumer.gov/idtheft* and *www.ftc.gov/credit.*

The Fair Credit Reporting Act (FCRA) governs the collection and use of information about you, including how you pay your bills. Consumer reporting agencies, such as credit bureaus, collect this information and provide it to your creditors and other persons who have a right to the information. In 2003, Congress amended the FCRA to give you specific rights when you are, or believe that you are, the victim of identity theft. These rights are intended to help you recover from identity theft.

Here's a brief overview of the FCRA rights, designed to help you deal with the problems that identity theft can cause:

1. *You have the right to a free copy of your consumer report* if you believe it has inaccurate information due to fraud or identity theft. This report is in addition to the free report all consumers may obtain every twelve months under another provision of the FCRA. *See www.ftc.gov/credit.*

2. *You have the right to place a ''fraud alert'' on your consumer report* to let potential creditors and others know that you may be a victim of identity theft. A fraud alert can make it more difficult for someone to get credit in your name because it tells creditors to follow certain procedures to protect you. It also may delay your ability to obtain credit. You may place a fraud alert in your file by calling one of the three nationwide consumer reporting agencies. As soon as that agency processes your fraud alert, it will notify the other two, which then also must place fraud alerts on your credit report.

- Equifax: 1–800–525–6285; *www.equifax.com*
- Experian: 1–888–397–3742; *www.experian.com*
- TransUnion: 1–800–680–7289; *www.transunion.com*

An *initial fraud alert* stays in your file for 90 days and entitles you to a free copy of your consumer report. An *extended alert* stays in your file for seven years and entitles you to two free consumer reports in a 12-month period. The additional consumer reports may help you detect signs of fraud, like whether additional fraudulent accounts have been opened in your name or whether someone has reported a change in your address. A consumer reporting agency will require appropriate proof of your identity, which may include your Social Security number, to place either of these alerts on your report. In addition, you must provide an identity theft report—a copy of a report filed by you with a Federal, State, or local law enforcement agency—to place an *extended alert* on your consumer report. Be sure to include as many details as you can, such as dates, account numbers, or any logical details, if known to you, that would help document the suspected fraud.

3. *You have the right to obtain documents relating to accounts opened in your name.* A creditor or other business must give you copies of applications and other business records relating to a transaction, or account in your name that you believe was the result of identity theft. The business may ask you for proof of your identity, a police report, and an affidavit before it gives you the documents.

4. *You have the right to obtain information from a debt collector.* If you ask, a debt collector must provide you with certain information about the debt you believe was incurred in your name by an identity thief—like the name of the creditor and the amount of the debt.

5. *You have the right to block information from your consumer report that relates to accounts an identity thief opened in your name.* An identity thief may run up bills in your name and not pay them. If that happens, information about the unpaid bills may appear on your consumer report. You can ask a consumer reporting agency to block this information from appearing on your consumer report. To do so, you must identify which information to block, and provide the consumer reporting agency with proof of your identity and a copy of the report you filed with law enforcement (the identity theft report). The consumer reporting agency can refuse or cancel your request for a block if, for example, you don't have the necessary supporting documentation, or where the block results from an error or a material misrepresentation of fact made by you. If the agency declines or rescinds the block, it must notify you. Once a debt resulting from identity theft has been blocked, a person or business with notice of the block may not sell, transfer, or place the debt for collection.

6. *You also may prevent businesses from reporting information to the consumer reporting agencies about an account in your name opened by an identity thief.* To do so, you must send a request to the address specified by the business that reports the information to the consumer reporting agency. The business will expect you to document that you are an identity theft victim. You may do so by submitting an identity theft report.

You can learn more about identity theft and how to undo the effects of this fraud at the FTC's identity theft Web site at *www.consumer.gov/idtheft.*

In addition to the new rights and procedures to help consumers deal with the effects of indentity theft, the FCRA has a host of other important protections. Described in more detail at *www.ftc.gov/credit*, these include the right to dispute inaccurate information with a consumer reporting agency; the right to have inaccurate information deleted from your consumer report; the right to know you credit score; the right to a free consumer report every year; and the right to receive additional free consumer reports when appropriate.

You will receive a summary of these rights from a consumer reporting agency every time you receive a consumer report.

Appendix F to Part 698—General Summary of Consumer Rights

The prescribed form for this summary is a disclosure that is substantially similar to the Commission's model summary with all information clearly and prominently displayed. A summary may accurately reflect changes to those items that may change over time (*e.g.*, dollar amounts, or phone numbers and addresses of Federal agencies) and remain in compliance.

A Summary of Your Rights Under the Fair Credit Reporting Act

The Federal Fair Credit Reporting Act (FCRA) promotes the accuracy, fairness, and privacy of information in the files of consumer reporting agencies. There are many types of consumer reporting agencies, including credit bureaus that gather and sell information about your creditworthiness to creditors, employers, landlords, and other businesses. The FCRA gives you specific rights, which are summarized below. You may have additional rights under state law. For more information, go to *www.ftc.gov/credit*, or write to: Consumer Response Center, Federal Trade Commission, 600 Pennsylvania Ave., NW., Washington, DC 20580.

You must be told if information in your file has been used against you. Anyone who uses information from a consumer reporting agency to deny your application for credit, insurance, or employment—or take another adverse action against you—must tell you and give you the name, address, and phone number of the agency that provided the information.

You can find out what is in your file. At any time, you may request and obtain your report from a consumer reporting agency. You will be asked to provide proper identification, which may include your Social Security number. In many cases the report will be free. You are entitled to free reports if a person has taken adverse action against you because of information in a report; if you are the victim of identify theft; if you are the victim of fraud; if you are on public assistance; or if you are unemployed but expect to apply for employment within 60 days. In addition, you are entitled to one free report every twelve months from each of the nationwide credit bureaus and from some specialized consumer reporting agencies. *See www.ftc.gov/credit* for details about how to obtain your free report.

You have a right to know your credit score. Credit scores are numerical summaries of a consumer's creditworthiness based on information from consumer reports. For a fee, you may get your credit score. For more information, click on *www.ftc.gov/credit.* In some mortgage transactions, you will get credit score information without charge.

You can dispute inaccurate information with the consumer reporting agency. If you tell a consumer reporting agency that your file has inaccurate information, the agency must take certain steps to investigate unless

your dispute is frivolous. For an explanation of dispute procedures, go to *www.ftc.gov/credit.*

Inaccurate information must be corrected or deleted. A consumer reporting agency or furnisher must remove or correct information verified as inaccurate, usually within 30 days after you dispute it. However, a consumer reporting agency may continue to report negative data that it verifies as being accurate.

Outdated negative information may not be reported. In most cases, a consumer reporting agency may not report negative information that is more than seven years old, or bankruptcies that are more than 10 years old.

Access to your file is limited. A consumer reporting agency may provide information about you only to people with a valid need as determined by the FCRA—usually to consider an application with a creditor, insurer, employer, landlord, or other business.

Your consent is required for reports that are provided to employers. A consumer reporting agency may not give out information about you to your employer, or potential employer, without your written consent. Blanket consent may be given at the time of employment or later.

You may choose to remove your name from consumer reporting agency lists for unsolicited credit and insurance offers. These offers must include a toll-free phone number you can call if you choose to take your name and address off lists in the future. You may opt-out at the major credit bureaus by calling 1–800–XXXXXXX.

You may seek damages from violators. If a consumer reporting agency, a user of consumer reports, or, in some cases, a furnisher of information to a consumer reporting agency violates the FCRA, you may sue them in State or Federal court.

Identity theft victims and active duty military personnel have additional rights. Victims of identity theft have new rights under the FCRA. Active-duty military personnel who are away from their regular duty station may file ''active duty'' alerts to help prevent identity theft. For more information, visit *www.ftc.gov/credit.*

The FCRA gives several federal agencies authority to enforce the FCRA:

To complain and for information	Please contact
Consumer reporting agencies, creditors and others not listed below	Federal Trade Commission, Consumer Response Center—FCRA, Washington, DC 20580, 1–877–382–4367 (Toll-Free).
National banks, federal branches/agencies of foreign banks (word ''National'' or initials ''N.A.'' appear in or after bank's name).	Office of the Comptroller of the Currency Compliance Management, Mail Stop 6–6, Washington, DC 20219, 800–613–6743.
Federal Reserve System member banks (except national banks, and federal branches/agencies of foreign banks).	Federal Reserve Board, Division of Consumer & Community Affairs, Washington, DC 20551, 202–452–3693.
Savings associations and federally chartered savings banks (word ''Federal'' or initials ''F.S.B.'' appear in federal institution's name).	Office of Thrift Supervision, Consumer Programs Washington, DC 20552, 800–842–6929.
Federal credit unions (words ''Federal Credit Union'' appear in institution's name).	National Credit Union Administration, 1775 Duke Street, Alexandria, VA 22314, 703–518–6360.
State-chartered banks that are not members of the Federal Reserve System.	Federal Deposit Insurance Corporation, Division of Compliance & Consumer Affairs, Washington, DC 20429, 800–934–FDIC.
Air, surface, or rail common carriers regulated by former Civil Aeronautics Board or Interstate Commerce Commission.	Department of Transportation, Office of Financial Management, Washington, DC 20590, 202–366–1306.
Activities subject to the Packers and Stockyards Act, 1921	Department of Agriculture, Office of Deputy Administrator—GIPSA, Washington, DC 20250, 202–720–7051.

Appendix G to Part 698—Notice of Furnisher Responsibilities

The prescribed form for this disclosure is a separate document that is substantially similar to the Commission's notice with all information clearly and prominently displayed. Consumer reporting agencies may limit the disclosure to only those items that they know are relevant to the furnisher that will receive the notice.

Notice to Furnishers of Information: Obligations of Furnishers Under the FCRA

The Federal Fair Credit Reporting Act (FCRA),15 U.S.C. 1681–1681y, imposes responsibilities on all persons who furnish information to consumer reporting agencies (CRAs). These responsibilities are found in Section 623 of the FCRA. State law may impose additional requirements. All furnishers of information to CRAs should become familiar with the applicable laws and may want to consult with their counsel to ensure that they are in compliance. The text of the FCRA is set forth in full at the Federal Trade Commission's Internet Web site at *www.ftc/credit.*

Section 623 imposes the following duties upon furnishers:

Accuracy Guidelines

The banking and credit union regulators and the Federal Trade Commission (FTC) will promulgate guidelines and regulations dealing with the accuracy of information provided to CRAs by furnishers. The regulations and guidelines issued by the FTC will be available at *www.ftc.gov/credit* when they are issued. *Section 623(e).*

General Prohibition on Reporting Inaccurate Information

The FCRA prohibits information furnishers from providing information to a CRA that they know or have reasonable cause to believe is inaccurate. However, the furnisher is not subject to this general prohibition if it clearly and conspicuously specifies an address to which consumers may write to notify the furnisher that certain information is inaccurate. *Sections 623(a)(1)(A) and (a)(1)(C).*

Duty to Correct and Update Information

If at any time a person who regularly and in the ordinary course of business furnishes information to one or more CRAs determines that the information provided is not complete or accurate, the furnisher must provide complete and accurate information to the CRA. In addition, the furnisher must notify all CRAs that received the information of any corrections, and must thereafter report only the complete and accurate information. *Section 623(a)(2).*

Duties After Notice of Dispute From Consumer

The Federal banking and credit union regulators and the FTC will issue regulations that will identify when an information furnisher must investigate a dispute made directly to the furnisher by a consumer. Once these regulations are issued, furnishers must comply with them and complete an investigation within 30 days (or 45 days, if the consumer later provides relevant additional information) unless the dispute is frivolous or irrelevant or comes from a ''credit repair'' organization. The FTC regulations will be available at *www.ftc.gov/credit. Section 623(a)(8).*

If a consumer notifies a furnisher that the consumer disputes the completeness or accuracy of any information reported by the furnisher, the furnisher may not subsequently report that information to a CRA without providing notice of the dispute. *Section 623(a)(3).*

Duties After Notice of Dispute From Consumer Reporting Agency

If a CRA notifies a furnisher that a consumer disputes the completeness or accuracy of information provided by the furnisher, the furnisher has a duty to follow certain procedures. The furnisher must:

- Conduct an investigation and review all relevant information provided by the CRA, including information given to the CRA by the consumer. *Sections 623(b)(1)(A) and (b)(1)(B).*
- Report the results to the CRA that referred the dispute, and, if the investigation establishes that the information was, in fact, incomplete or inaccurate, report the results to all CRAs to which the furnisher provided the information that compile and maintain files

on a nationwide basis. *Section 623(b)(1)(c) and (b)(1)(D).*

• Promptly modify or delete the information, or block its transmission in the future. *Sections 623(b)(1)(E).*

• Complete the above steps within 30 days from the date the CRA receives the dispute (or 45 days, if the consumer later provides relevant additional information to the CRA). *Section 623(b)(2).*

Duty to Report Voluntary Closing of Credit Accounts

If a consumer voluntarily closes a credit account, any person who regularly and in the ordinary course of business furnishes information to one or more CRAs must report this fact when it provides information to CRAs for the time period in which the account was closed. *Section 623(a)(4).*

Duty to Report Dates of Delinquencies

If a furnisher reports information concerning a delinquent account placed for collection, charged to profit or loss, or subject to any similar action, the furnisher must, within 90 days after reporting the information, provide the CRA with the month and the year of the commencement of the delinquency that immediately preceded the action, so that the agency will know how long to keep the information in the consumer's file. *Section 623(a)(5).*

Debt collectors that report information to CRAs comply with the requirements of Section 623(a)(5) (until there is a consumer dispute) if they report the same delinquency date previously reported by the creditor. If they do not have this, they comply with the FCRA if they establish reasonable procedures to obtain and report delinquency dates, or, if the delinquency dates cannot be reasonably obtained, they follow reasonable procedures to ensure that the dates reported precede the date the account was placed for collection, charged to profit or loss, or subjected to any similar action. *Section 623(a)(5).*

Duties of Financial Institutions When Reporting Negative Information

Furnishers who are financial institutions must notify consumers in writing if they furnish negative information to a CRA. *Section 623(a)(7).* The Federal Reserve Board has prescribed a model disclosure, 12 CFR Part 222, App. B.

Duties When Furnishing Medical Information

A furnisher whose primary business is providing medical services, products, or devices (and the furnisher's agents or assignees) is a medical information furnisher for the purposes of the FCRA and must notify all CRAs that it reports to of this fact. *Section 623(a)(9).* This will enable CRAs to comply with their duties under Section 604(g) when reporting medical information.

Duties When ID Theft Occurs

All furnishers must have in place reasonable procedures to respond to notifications from CRAs that information furnished is the result of identity theft and to prevent refurnishing the information in the future. Furnishers must also establish procedures so that information reported directly to the furnisher by consumers about accounts that are linked to identity theft will not be furnished to any CRA unless the furnisher subsequently knows or is informed by the consumer that the information is correct. *Section 623(a)(6).* When any furnisher of information is notified pursuant to the procedures set forth in Section 605B that a debt has resulted from identity theft, the furnisher may not sell, transfer, or place for collection the debt. *Section 615(f).*

Appendix H to Part 698—Notice of User Responsibilities

The prescribed form for this disclosure is a separate document that is substantially similar to the Commission's notice with all information clearly and prominently displayed. Consumer reporting agencies may limit the disclosure to only those items that they know are relevant to the user that will receive the notice.

Notice to Users of Consumer Reports: Obligations of Users Under the FCRA

The Fair Credit Reporting Act (FCRA), 15 U.S.C. 1681–1681y, requires that this notice be provided to inform users of consumer reports of their legal obligations. State law may impose additional requirements. The text of the FCRA is set forth in full at the Federal Trade Commission's Internet Web site at *www.ftc.gov/credit.*

The first section of this summary sets forth the responsibilities imposed by the FCRA on all users of consumer reports. The subsequent sections discuss the duties of users of reports that contain specific types of information, or that are used for certain purposes, and the legal consequences of violations. If you are a furnisher of information to a consumer reporting agency (CRA), you have additional obligations and will receive a separate notice from the CRA describing your duties as a furnisher.

I. Obligations of All Users of Consumer Reports

A. Users Must Have a Permissible Purpose

Congress has limited the use of consumer reports to protect consumers' privacy. All users must have a permissible purpose under the FCRA to obtain a consumer report. Section 604 of the FCRA contains a list of the permissible purposes under the law. These are:

• As ordered by a court or a Federal grand jury subpoena. *Section 604(a)(1)*

• As instructed by the consumer in writing. *Section 604(a)(2)*

• For the extension of credit as a result of an application from a consumer, or the review or collection of a consumer's account. *Section 604(a)(3)(A)*

• For employment purposes, including hiring and promotion decisions, where the consumer has given written permission. *Sections 604(a)(3)(B) and 604(b)*

• For the underwriting of insurance as a result of an application from a consumer. *Section 604(a)(3)(C)*

• When there is a legitimate business need, in connection with a business transaction that is *initiated* by the consumer. *Section 604(a)(3)(F)(i)*

• To review a consumer's account to determine whether the consumer continues to meet the terms of the account. *Section 604(a)(3)(F)(ii)*

• To determine a consumer's eligibility for a license or other benefit granted by a governmental instrumentality required by law to consider an applicant's financial responsibility or status. *Section 604(a)(3)(D)*

• For use by a potential investor or servicer, or current insurer, in a valuation or assessment of the credit or prepayment risks associated with an existing credit obligation. *Section 604(a)(3)(E)*

• For use by State and local officials in connection with the determination of child support payments, or modifications and enforcement thereof. *Sections 604(a)(4) and 604(a)(5)*

In addition, creditors and insurers may obtain certain consumer report information for the purpose of making unsolicited offers of credit or insurance. *Section 604(c).* The particular obligations of users of ''prescreened'' information are described in Section VII below.

B. Users Must Provide Certifications

Section 604(f) of the FCRA prohibits any person from obtaining a consumer report from a consumer reporting agency (CRA) unless the person has certified to the CRA (by a general or specific certification, as appropriate) the permissible purpose(s) for which the report is being obtained and certifies that the report will not be used for any other purpose.

C. Users Must Notify Consumers When Adverse Actions Are Taken

The term ''adverse action'' is defined very broadly by Section 603 of the FCRA. ''Adverse actions'' include all business, credit, and employment actions affecting consumers that can be considered to have a negative impact—such as unfavorably changing credit or contract terms or conditions, denying or canceling credit or insurance, offering credit on less favorable terms than requested, or denying employment or promotion.

1. Adverse Actions Based on Information Obtained From a CRA

If a user takes any type of adverse action that is based at least in part on information contained in a consumer report, the user is required by Section 615(a) of the FCRA to notify the consumer. The notification may be done in writing, orally, or by electronic means. It must include the following:

• The name, address, and telephone number of the CRA (including a toll-free telephone number, if it is a nationwide CRA) that provided the report.

• A statement that the CRA did not make the adverse decision and is not able to explain why the decision was made.

• A statement setting forth the consumer's right to obtain a free disclosure of the consumer's file from the CRA if the consumer requests the report within 60 days.

• A statement setting forth the consumer's right to dispute directly with the CRA the accuracy or completeness of any information provided by the CRA.

2. Adverse Actions Based on Information Obtained From Third Parties Who Are Not Consumer Reporting Agencies

If a person denies (or increases the charge for) credit for personal, family, or household purposes based either wholly or partly upon information from a person other than a CRA, and the information is the type of consumer information covered by the FCRA, Section 615(b)(1) of the FCRA requires that the user clearly and accurately disclose to the consumer his or her right to obtain disclosure of the nature of the information that was relied upon by making a written request within 60 days of notification. The user must provide the disclosure within a reasonable period of time following the consumer's written request.

3. Adverse Actions Based on Information Obtained From Affiliates

If a person takes an adverse action involving insurance, employment, or a credit transaction initiated by the consumer, based on information of the type covered by the FCRA, and this information was obtained from an entity affiliated with the user of the information by common ownership or control, Section 615(b)(2) requires the user to notify the consumer of the adverse action. The notification must inform the consumer that he or she may obtain a disclosure of the nature of the information relied upon by making a written request within 60 days of receiving the adverse action notice. If the consumer makes such a request, the user must disclose the nature of the information not later than 30 days after receiving the request. (Information that is obtained directly from an affiliated entity relating solely to its transactions or experiences with the consumer, and information from a consumer report obtained from an affiliate are not covered by Section 615(b)(2). If consumer report information is used, the procedures discussed above for consumer reports apply.)

D. Users Have Obligations When Fraud and Active Duty Military Alerts Are in Files

When a consumer has placed a fraud alert, including one relating to identity theft, or an active duty military alert in his or her consumer report, Section 605A(h) imposes limitations on users of the reports. For initial fraud alerts and active duty alerts, the user must have reasonable policies and procedures in place to form a belief that the user knows the identity of the applicant or contact the consumer at a telephone number specified by the consumer; in the case of extended fraud alerts, the user must contact the consumer in accordance with the contact information provided in the consumer's alert.

E. Users Have Obligations When Notified of an Address Discrepancy

CRAs will notify users that request reports when the address for a consumer provided by the user in requesting the report is different from the address in the consumer's file. Users must comply with regulations specifying the procedures to be followed when this occurs to be issued by the Federal Trade Commission and the banking and credit union regulators. The Federal Trade Commission's regulations will be available at *www.ftc.gov/credit.*

F. Users Have Obligations When Disposing of Records

Section 628 of the FCRA requires that all users of consumer report information have in place procedures to properly dispose of records containing this information. The Federal Trade Commission, the Securities and Exchange Commission, and the banking and credit union regulators have issued regulations covering disposal. The Federal Trade Commission's regulations may be found at *www.ftc.gov/credit.*

II. Creditors Must Make Additional Disclosures

If a person makes credit decisions using a risk-based model—*i.e.,* the credit grantor offers some consumers interest rates and terms less favorable than those offered to other consumers based on the consumer's credit risk profile derived using consumer report information and makes a credit offer to a consumer ''on material terms that are materially less favorable than the most favorable terms available to a substantial proportion of consumers,'' Section 615(h) of the FCRA requires the credit grantor to disclose this fact to the consumer and to provide certain information. Consumers who receive a notice will be entitled to a free copy of their consumer report. The Federal Trade Commission and the Federal Reserve Board will jointly prescribe rules implementing Section 615(h).

Section 609(g) requires a disclosure by all persons that make or arrange loans secured by residential real property (one to four units) and that use credit scores. These credit grantors must provide credit scores to applicants and make the disclosure set forth in Section 609(g)(1)(D) (''Notice to the Home Loan Applicant'').

III. Obligations of Users When Consumer Reports Are Obtained for Employment Purposes

A. Employment Other Than in the Trucking Industry

If information from a CRA is used for employment purposes, the user has specific duties, which are set forth in Section 604(b) of the FCRA. The user must:

- Make a clear and conspicuous written disclosure to the consumer before the report is obtained, in a document that consists solely of the disclosure, that a consumer report may be obtained.
- Obtain prior written authorization from the consumer.
- Certify to the CRA that the above steps have been followed, that the information being obtained will not be used in violation of any Federal or State equal opportunity law or regulation, and that, if any adverse action is to be taken based on the consumer report, a copy of the report and a summary of the consumer's rights will be provided to the consumer.
- Before taking an adverse action, the user must provide a copy of the report to the consumer as well as the summary of consumer's rights. (The user should receive this summary from the CRA.) A Section 615(a) adverse action notice should be sent after the adverse action is taken.

An adverse action notice also is required in employment situations if credit information (other than transactions and experience data) obtained from an affiliate is used to deny employment. *Section 615(b)(2)*

The procedures for investigative consumer reports and post-employment misconduct investigations are set forth below.

B. Employment in the Trucking Industry

Special rules apply for truck drivers where the only interaction between the consumer and the potential employer is by mail, telephone, or computer. In this case, the consumer may provide consent orally or electronically, and an adverse action may be made orally, in writing, or electronically. The consumer may obtain a copy of any report relied upon by the trucking company by contacting the company.

IV. Obligations When Investigative Consumer Reports Are Used

Investigative consumer reports are a special type of consumer report in which information about a consumer's character, general reputation, personal characteristics, and mode of living is obtained through personal interviews. Consumers who are the subjects of such reports are given special rights under the FCRA. If a user intends to obtain an investigative consumer report, Section 606 of the FCRA requires the following:

- The user must disclose to the consumer that an investigative consumer report may be obtained. This must be done in a written disclosure that is mailed, or otherwise delivered, to the consumer at some time before or not later than three days after the date on which the report was first requested. The disclosure must include a statement informing the consumer of his or her right to request additional disclosures of the nature and scope of the investigation as described below, and the summary of consumer rights required by Section 609 of the FCRA. (The summary of consumer rights will be provided by the CRA that conducts the investigation.)
- The user must certify to the CRA that the disclosures set forth above have been made and that the user will make the disclosure described below.
- Upon the written request of a consumer made within a reasonable period of time after the disclosures required above, the user must make a complete disclosure of the nature and scope of the investigation. This must be made in a written statement that is mailed, or otherwise delivered, to the consumer no later than five days after the date on which the request was received from the consumer or the report was first requested, whichever is later in time.

V. Special Proceedures for Employee Investigations

Section 603(x) of the FCRA provides special procedures for investigations of suspected misconduct by an employee or for compliance with Federal, State or local laws and regulations or the rules of a self-regulatory organization, and compliance with written policies of the employer. These investigations are not treated as consumer reports so long as the employer or its agent complies with the procedures set forth in

Section 603(x), and a summary describing the nature and scope of the inquiry is made to the employee if an adverse action is taken based on the investigation.

VI. Obligations of Users of Medical Information

Section 604(g) of the FCRA limits the use of medical information obtained from consumer reporting agencies (other than payment information that appears in a coded form that does not identify the medical provider). If the information is to be used for an insurance transaction, the consumer must consent to the furnishing of the report or the information must be coded. If the report is to be used for employment purposes or in connection with a credit transaction, the consumer must provide specific written consent and the medical information must be relevant. Any user who receives medical information shall not disclose the information to any other person (except where necessary to carry out the purpose for which the information was disclosed, or as permitted by statute, regulation, or order). The banking and credit union regulators have authority to issue regulations in this area.

VII. Obligations of Users of "Prescreened" Lists

The FCRA permits creditors and insurers to obtain limited consumer report information for use in connection with unsolicited offers of credit or insurance under certain circumstances. *Sections 603(l), 604(c), 604(e), and 615(d).* This practice is known as "prescreening" and typically involves obtaining a list of consumers from a CRA who meet certain preestablished criteria. If any person intends to use prescreened lists, that person must (1) before the offer is made, establish the criteria that will be relied upon to make the offer and to grant credit or insurance, and (2) maintain such criteria on file for a three-year period beginning on the date on which the offer is made to each consumer. In addition, any user must provide with each written solicitation a clear and conspicuous statement that:

- Information contained in a consumer's CRA file was used in connection with the transaction.
- The consumer received the offer because he or she satisfied the criteria for credit worthiness or insurability used to screen for the offer.
- Credit or insurance may not be extended if, after the consumer responds, it is determined that the consumer does not meet the criteria used for screening or any applicable criteria bearing on credit worthiness or insurability, or the consumer does not furnish required collateral.
- The consumer may prohibit the use of information in his or her file in connection with future prescreened offers of credit or insurance by contacting the notification system established by the CRA that provided the report. The statement must include the address and toll-free telephone number of the appropriate notification system.

The Federal Trade Commission will by rule establish the format, type size, and manner of the disclosure required by Section 615(d). The FTC's regulations will be at *www.ftc.gov/credit.* There also are special procedures that must be followed with using information obtained from affiliates. These procedures are found in Section 624 of the FCRA.

VIII. Obligations of Resellers

A. Disclosure and Certification Requirements

Section 607(e) of the FCRA requires any person who obtains a consumer report for resale to take the following steps:

- Disclose the identity of the end-user to the source CRA.
- Identify to the source CRA each permissible purpose for which the report will be furnished to the end-user.
- Establish and follow reasonable procedures to ensure that reports are resold only for permissible purposes, including procedures to obtain: (1) the identity of all end-users; (2) certifications from all users of each purpose for which reports will be used; and (3) certifications that reports will not be used for any purpose other than the purpose(s) specified to the reseller. Resellers must make reasonable efforts to verify this information before selling the report.

B. Reinvestigations by Resellers

Section 611(f) exempts resellers from the general reinvestigation duties that apply to CRAs, but requires resellers to investigate errors for which they are responsible and to refer other errors to the consumer reporting agencies that provided the reseller with the information that is the subject of the dispute. When any of those CRAs notify the reseller of the results of their investigation, the reseller shall immediately reconvey the information to the consumer.

C. Fraud Alerts and Resellers

Section 605A(f) requires resellers who receive fraud alerts or active duty alerts from another consumer reporting agency to include these in their reports.

IX. Liability for Violations of the FCRA

Failure to comply with the FCRA can result in state or federal enforcement actions, as well as private lawsuits. *Sections 616, 617, and 621.* In addition, any person who knowingly and willfully obtains a consumer report under false pretenses may face criminal prosecution. *Section 619.*

By direction of the Commission.

Donald S. Clark,

Secretary.

[FR Doc. 04–16010 Filed 7–15–04; 8:45 am]

BILLING CODE 6750–01–P

DEPARTMENT OF DEFENSE

Department of the Army

32 CFR Part 635

RIN 0702–AA42–U

Law Enforcement Reporting

AGENCY: Department of the Army, DoD.

ACTION: Proposed rule; request for comments.

SUMMARY: The Department of the Army proposes to add its regulation concerning law enforcement reporting. The regulation prescribes policies and procedures on preparing, reporting, using, retaining, and disposing of Military Police Reports. The regulation prescribes policies and procedures for offense reporting and the release of law enforcement information.

DATES: Comments submitted to the address below on or before September 14, 2004 will be considered.

ADDRESSES: You may submit comments, identified by "32 CFR Part 635 and RIN 0702–AA42–U in the subject line, by any of the following methods:

- Federal eRulemaking Portal: *http://www.regulations.gov.* Follow the instructions for submitting comments.
- E-Mail: *nathan.evans3@us.army.mil.* Include 32 CFR part 635 and RIN 0702–AA42–U in the subject line of the message.
- Mail: Headquarters, Department of the Army, Office of the Provost Marshal General, ATTN: DAPM–MPD–LE, 2800 Army Pentagon, Washington, DC 20310–2800.

FOR FURTHER INFORMATION CONTACT: Nathan Evans (703) 693–2126.

SUPPLEMENTARY INFORMATION:

A. Background

This rule has not previously been published. The Administrative Procedure Act, as amended by the Freedom of Information Act requires that certain policies and procedures and other information concerning the Department of the Army be published in the **Federal Register.** The policies and procedures covered by this regulation fall into that category.

B. Regulatory Flexibility Act

The Department of the Army has determined that the Regulatory Flexibility Act does not apply because the proposed rule does not have a significant economic impact on a substantial number of small entities within the meaning of the Regulatory Flexibility Act, 5 U.S.C. 601–612.

C. Unfunded Mandates Reform Act

The Department of the Army has determined that the Unfunded Mandates Reform Act does not apply because the proposed rule does not include a mandate that may result in estimated costs to State, local or tribal governments in the aggregate, or the private sector, of $100 million or more.

D. National Environmental Policy Act

The Department of the Army has determined that the National Environmental Policy Act does not apply because the proposed rule does not have an adverse impact on the environment.

E. Paperwork Reduction Act

The Department of the Army has determined that the Paperwork Reduction Act does not apply because the proposed rule does not involve collection of information from the public.

F. Executive Order 12630 (Government Actions and Interference With Constitutionally Protected Property Rights)

The Department of the Army has determined that Executive Order 12630 does not apply because the proposed rule does not impair private property rights.

G. Executive Order 12866 (Regulatory Planning and Review)

The Department of the Army has determined that according to the criteria defined in Executive Order 12866 this proposed rule is not a significant regulatory action. As such, the proposed rule is not subject to Office of Management and Budget review under section 6(a)(3) of the Executive Order.

H. Executive Order 13045 (Protection of Children From Environmental Health Risk and Safety Risks)

The Department of the Army has determined that according to the criteria defined in Executive Order 13045 this proposed rule does not apply.

I. Executive Order 13132 (Federalism)

The Department of the Army has determined that according to the criteria defined in Executive Order 13132 this proposed rule does not apply because it will not have a substantial effect on the States, on the relationship between the national government and the States, or on the distribution of power and responsibilities among the various levels of government.

Jeffery B. Porter,

Chief, Law Enforcement Policy and Oversight Section.

List of Subjects in 32 CFR Part 635

Crime, Law, Law enforcement, Law enforcement officers, Military law.

For reasons stated in the preamble the Department of the Army proposes to add Part 635 to Subchapter I of Title 32 to read as follows:

PART 635—LAW ENFORCEMENT REPORTING

Subpart A—Records Administration

Sec.
635.1 General.
635.2 Safeguarding Official Information.
635.3 Special Requirements of the Privacy Act of 1974.
635.4 Administration of expelled or barred persons file.
635.5 Police Intelligence/Criminal Information.
635.6 Name checks.
635.7 Registration of Sex Offenders.

Subpart B—Release of Information

635.8 General.
635.9 Guidelines for disclosure within DOD.
635.10 Release of information.
635.11 Release of information under the Freedom of Information Act (FOIA).
635.12 Release of information under the Privacy Act of 1974.
635.13 Amendment of Records.
635.14 Accounting for military police record disclosure.
635.15 Release of law enforcement information furnished by foreign governments or international organizations.

Subpart C—Offense Reporting

635.16 General.
635.17 Military Police Report.
635.18 Identifying criminal incidents and subjects of investigation.
635.19 Offense Codes.
635.20 Military Police Codes (MPC).
635.21 USACRC control numbers.
635.22 Reserve component, U.S. Army Reserve, and Army National Guard Personnel.
635.23 DA Form 4833 (Commander's Report of Disciplinary or Administrative Action).
635.24 Updating the COPS MPRS.
635.25 Submission of Criminal History Data to the CJIS.
635.26 Procedures for reporting Absence without Leave (AWOL) and Desertion Offenses.
635.27 Vehicle Registration System.
635.28 Domestic Violence and Protection Orders.

Subpart D—Army Quarterly Trends and Analysis Report

635.29 General.
635.30 Crime Rate Reporting.

Subpart E—Victim and Witness Assistance Procedures

635.31 General.
635.32 Procedures.
635.33 Notification.
635.34 Statistical reporting requirements.

Authority: 28 U.S.C. 534 note, 42 U.S.C. 10601, 18 U.S.C. 922, 42 U.S.C. 14071, 10 U.S.C. 1562, 10 U.S.C. Chap. 47.

Subpart A—Records Administration

§ 635.1 General.

(a) Military police records and files created under provisions of this part will be maintained and disposed of in accordance with instructions and standards prescribed by Army Regulation (AR) 25–400–2, AR 25–55, AR 340–21, and other applicable HQDA directives.

(b) Each provost marshal will appoint in writing two staff members, one primary and one alternate, to account for and safeguard all records containing personal information protected by law. Action will be taken to ensure that protected personal information is used and stored only where facilities and conditions will preclude unauthorized or unintentional disclosure.

(c) Personal information includes information that is intimate or private to an individual, as distinguished from that which concerns a person's official function or public life. Examples include the social security number (SSN) medical history, home address, and home telephone number.

(d) Access to areas in which military police records are prepared, processed and stored will be restricted to those personnel whose duties require their presence or to other personnel on official business. Military police records containing personal information will be stored in a locked room or locked filing cabinet when not under the personal control of authorized personnel. Alternate storage systems providing equal or greater protection may be used in accordance with AR 25–55.

(e) Areas in which remote computer terminals or authorized personal computers used for government business and activities are used, stored, process, or retrieve military police records will be restricted to personnel on official business. When processing military police information, computer video display monitors will be positioned so that protected information cannot be viewed by unauthorized persons. Computer output from automated military police systems will be controlled as specified in paragraph (d) of this section.

(f) Output from any locally prepared data or automated systems containing personal information subject to the Privacy Act will be controlled per AR 340–21. All locally created or MACOM unique automated systems of records containing law enforcement information must be reported to and approved by HQDA, Office of the Provost Marshal General prior to use. The request must clearly document why the COPS MPRS system cannot meet the requirements or

objectives of the organization. After review and approval by HQDA, the installation and MACOM will complete and process the systems notice for publication in the **Federal Register** per AR 340–21 and the Privacy Act.

(g) Security of automated systems is governed by AR 380–19. Provost marshals using automated systems will appoint, in writing, an Information Assurance Security Officer (IASO) who will ensure implementation of automation security requirements within the organization. Passwords used to control systems access will be generated, issued, and controlled by the IASO.

(h) Supervisors at all levels will ensure that personnel whose duties involve preparation, processing, filing, and release of military police records are knowledgeable of and comply with policies and procedures contained in this part, AR 25–55, AR 340–21, and other applicable HQDA directives. Particular attention will be directed to provisions on the release of information and protection of privacy.

(i) Military police records identifying juveniles as offenders will be clearly marked as juvenile records and will be kept secure from unauthorized access by individuals. Juvenile records may be stored with adult records but clearly designated as juvenile records even after the individual becomes of legal age. In distributing information on juveniles, provost marshals will ensure that only individuals with a clear reason to know the identity of a juvenile are provided the identifying information on the juvenile. For example, a community commander is authorized to receive pertinent information on juveniles. When a MPR identifying juvenile offenders must be provided to multiple commanders or supervisors, the provost marshal must sanitize each report to withhold juvenile information not pertaining to that commander's area of responsibility.

(j) Military police records in the custody of USACRC will be processed, stored and maintained in accordance with policy established by the Director, USACRC.

§ 635.2 Safeguarding official information.

(a) Military police records are unclassified except when they contain national security information as defined in AR 380–5.

(b) When military police records containing personal information transmitted outside the installation law enforcement community to other departments and agencies within DOD, such records will be marked ''For Official Use Only.'' Records marked ''For Official Use Only'' will be transmitted as prescribed by AR 25–55. Use of an expanded marking is required for certain records transmitted outside DOD per AR 25–55.

(c) Military police records may also be released to Federal, state, local or foreign law enforcement agencies as prescribed by AR 340–21. Expanded markings will be applied to these records.

§ 635.3 Special requirements of the Privacy Act of 1974.

(a) Certain personal information is protected under the Privacy Act and AR 340–21.

(b) Individuals requested to furnish personal information must normally be advised of the purpose for which the information is routinely used.

(c) Army law enforcement personnel performing official duties often require an individual's SSN for identification purposes. Personal information may be obtained from identification documents without violating an individual's privacy and without providing a Privacy Act Statement. This personal information can be used to complete military police reports and records. The following procedures may be used to obtain SSNs:

(1) Active Army, U.S. Army Reserve (USAR), Army National Guard (ARNG) and retired military personnel are required to produce their DD Form 2A (Act), DD Form 2 (Act), DD Form 2 (Res), or DD Form 2 (Ret) (U.S. Armed Forces of the United States General Convention Identification Card), or other government issued identification, as appropriate.

(2) Family members of sponsors may be requested to produce their DD Form 1173 (Uniformed Services Identification and Privilege Card). Information contained thereon (for example, the sponsor's SSN) may be used to verify and complete applicable sections of MPRs and related forms.

(3) DOD civilian personnel may be requested to produce their appropriate service identification. DA Form 1602 (Civilian Identification) may be requested from DA civilian employees. If unable to produce such identification, DOD civilians may be requested to provide other verifying documentation.

(4) Non-DOD civilians, including family members and those whose status is unknown, will be advised of the provisions of the Privacy Act Statement when requested to disclose their SSN.

(d) Requests for new systems of military police records, changes to existing systems, and continuation systems, not addressed in existing public notices will be processed as prescribed in AR 340–21, after approval is granted by HQDA, OPMG (DAPM–MPD–LE).

§ 635.4 Administration of expelled or barred persons file.

(a) When action is completed by an installation commander to bar an individual from the installation under 18 U.S.C. 1382 the installation provost marshal will be provided—

(1) A copy of the letter or order barring the individual.

(2) Reasons for the bar.

(3) Effective date of the bar and period covered.

(b) The provost marshal will maintain a list of barred or expelled persons. When the bar or expulsion action is predicated on information contained in military police investigative records, the bar or expulsion document will reference the appropriate military police record or MPR. When a MPR results in the issuance of a bar letter the provost marshal will forward a copy of the bar letter to Director, USACRC to be filed with the original MPR. The record of the bar will also be entered into COPS, in the Vehicle Registration module, under Barrings.

§ 635.5 Police intelligence/Criminal information.

(a) The purpose of gathering police intelligence is to identify individuals or groups of individuals in an effort to anticipate, prevent, or monitor possible criminal activity. If police intelligence is developed to the point where it factually establishes a criminal offense, an investigation by the military police, U.S. Army Criminal Investigation Command (USACIDC) or other investigative agency will be initiated.

(b) Information on persons and organizations not affiliated with DOD may not normally be acquired, reported, processed or stored. Situations justifying acquisition of this information include, but are not limited to—

(1) Theft, destruction, or sabotage of weapons, ammunition, equipment facilities, or records belonging to DOD units or installations.

(2) Possible compromise of classified defense information by unauthorized disclosure or espionage.

(3) Subversion of loyalty, discipline, or morale of DA military or civilian personnel by actively encouraging violation of laws, disobedience of lawful orders and regulations, or disruption of military activities.

(4) Protection of Army installations and activities from potential threat.

(5) Information received from the FBI, state, local, or international law enforcement agencies which directly

pertain to the law enforcement mission and activity of the installation provost marshal office, MACOM provost marshal office, or that has a clearly identifiable military purpose and connection. A determination that specific information may not be collected, retained or disseminated by intelligence activities does not indicate that the information is automatically eligible for collection, retention, or dissemination under the provisions of this part. The policies in this section are not intended and will not be used to circumvent any federal law that restricts gathering, retaining or dissemination of information on private individuals or organizations.

(c) Retention and disposition of information on non-DOD affiliated individuals and organizations are subject to the provisions of AR 380–13 and AR 25–400–2.

(d) Police intelligence will be actively exchanged between DOD law enforcement agencies, military police, USACIDC, local, state, federal, and international law enforcement agencies. One tool developed by DOD for sharing police intelligence is the Joint Protection Enterprise Network (JPEN). JPEN provides users with the ability to post, retrieve, filter, and analyze real-world events. There are seven reporting criteria for JPEN:

(1) Non-specific threats;
(2) Surveillance;
(3) Elicitation;
(4) Tests of security;
(5) Repetitive activities;
(6) Bomb threats/Incidents; and
(7) Suspicious activities/Incidents.

(e) If a written extract from local police intelligence files is provided to an authorized investigative agency, the following will be included on the transmittal documents: ''THIS DOCUMENT IS PROVIDED FOR INFORMATION AND USE. COPIES OF THIS DOCUMENT, ENCLOSURES THERETO, AND INFORMATION THEREFROM, WILL NOT BE FURTHER RELEASED WITHOUT THE PRIOR APPROVAL OF THE INSTALLATION PROVOST MARSHAL.''

(f) Local police intelligence files may be exempt from certain disclosure requirements by AR 25–55 and the Freedom of Information Act (FOIA).

§ 635.6 Name checks.

(a) Information contained in military police records may be released under the provisions of AR 340–21 to authorized personnel for valid background check purposes. Examples include child care/youth program providers, access control, unique or special duty assignments, and security clearance procedures. Any information released must be restricted to that necessary and relevant to the requester's official purpose. Provost marshals will establish written procedures to ensure that release is accomplished in accordance with AR 340–21.

(b) Checks will be accomplished by a review of the COPS MPRS. Information will be disseminated according to Subpart B of this part.

(c) In response to a request for local files or name checks, provost marshals will release only founded offenses with final disposition. Offenses determined to be unfounded will not be released. These limitations do not apply to requests submitted by law enforcement agencies for law enforcement purposes, and counterintelligence investigative agencies for counterintelligence purposes.

(d) COPS MPRS is a database, which will contain all military police reports filed worldwide. Authorized users of COPS MPRS can conduct name checks for criminal justice purposes. To conduct a name check, users must have either the social security number/foreign national number, or the first and last name of the individual. If a search is done by name only, COPS MPRS will return a list of all matches to the data entered. Select the appropriate name from the list.

(e) A successful query of COPS MPRS would return the following information:

(1) Military Police Report Number;
(2) Report date;
(3) Social Security Number;
(4) Last name;
(5) First name;
(6) Protected Identity (Y/N);
(7) A link to view the military police report; and
(8) Whether the individual is a subject, victim, or a person related to the report disposition.

(f) Name checks will include the criteria established in COPS MPRS and the USACRC. All of the policies and procedures for such checks will conform to the provisions of this part. Any exceptions to this policy must be coordinated with HQDA, Office of the Provost Marshal General before any name checks are conducted. The following are examples of appropriate uses of the name check feature of COPS MPRS:

(1) Individuals named as the subjects of serious incident reports.
(2) Individuals named as subjects of investigations who must be reported to the USACRC.
(3) Employment as child care/youth program providers.
(4) Local checks of the COPS MPRS as part of placing an individual in the COPS MPRS system.
(5) Name checks for individuals employed in law enforcement positions.

(g) Provost marshals will ensure that an audit trail is established and maintained for all information released from military police records.

(h) Procedures for conduct of name checks with the USACRC are addressed in AR 195–2. The following information is required for USACRC name checks (when only the name is available, USACRC should be contacted telephonically for assistance):

(1) Full name, date of birth, SSN, and former service number of the individual concerned.
(2) The specific statute, directive, or regulation on which the request is based, when requested for other than criminal investigative purposes.

(i) Third party checks (first party asks second party to obtain information from third party on behalf of first party) will not be conducted.

§ 635.7 Registration of sex offenders.

Soldiers who are convicted by court-martial for certain sexual offenses must comply with any applicable state registration requirements in effect in the state in which they intend to reside. See AR 190–47, Chapter 14 and AR 27–10, Chapter 24. This is a statutory requirement based on the Jacob Wetterling Act, and implemented by DOD Instruction 1325.7, and AR 27–10. Provost Marshals should coordinate with their local Staff Judge Advocate to determine if an individual must register. The registration process will be completed utilizing the state registration form, which is available through state and local law enforcement agencies. A copy of the completed registration form will be maintained in the installation Provost Marshal Office. Additionally, a Military Police Report (DA Form 3975) will be completed as an information entry into COPS. Installation Provost Marshals will provide written notice to state and local law enforcement agencies of the arrival of an offender to the local area so the registration process can be completed.

Subpart B—Release of Information

§ 635.8 General.

(a) The policy of HQDA is to conduct activities in an open manner and provide the public accurate and timely information. Accordingly, law enforcement information will be released to the degree permitted by law and Army regulations.

(b) Any release of military police records or information compiled for law enforcement purposes, whether to persons within or outside the Army,

must be in accordance with the FOIA and Privacy Act.

(c) Requests by individuals for access to military police records about themselves will be processed in compliance with AR 25–55 and AR 340–21.

(d) Military police records in the temporary possession of another organization remain the property of the originating law enforcement agency. The following procedures apply to any organization authorized temporary use of military police records:

(1) Any request from an individual seeking access to military police records will be immediately referred to the originating law enforcement agency for processing.

(2) When the temporary purpose of the using organization has been satisfied, the military police records will be destroyed or returned to the originating law enforcement agency.

(3) A using organization may maintain information from military police records in their system of records, if approval is obtained from the originating law enforcement agency. This information may include reference to a military police record (for example, MPR number or date of offense), a summary of information contained in the record, or the entire military police record. When a user includes a military police record in its system of records, the originating law enforcement agency may delete portions from that record to protect special investigative techniques, maintain confidentiality, preclude compromise of an investigation, and protect other law enforcement interests.

§ 635.9 Guidelines for disclosure within DOD.

(a) Criminal record information contained in military police documents will not be disseminated unless there is a clearly demonstrated official need to know. A demonstrated official need to know exists when the record is necessary to accomplish a function that is within the responsibility of the requesting activity or individual, is prescribed by statute, DOD directive, regulation, or instruction, or by Army regulation.

(1) Criminal record information may be disclosed to commanders or staff agencies to assist in executing criminal justice functions. Only that information reasonably required will be released. Such disclosure must clearly relate to a law enforcement function.

(2) Criminal record information related to subjects of criminal justice disposition will be released when required for security clearance procedures.

(3) Criminal record information may be released to an activity when matters of national security are involved.

(4) When an individual informs an activity of criminal record information pertaining to them, the receiving activity may seek verification of this information through the responsible law enforcement agency or may forward the request to that organization. The individual must be advised by the receiving agency of the action being pursued. Law enforcement agencies will respond to such requests in the same manner as FOIA and Privacy Act cases.

(b) Nothing in this part will be construed to limit the dissemination of information between military police, the USACIDC, and other law enforcement agencies within the Army and DOD.

§ 635.10 Release of information.

(a) Release of information from Army records to agencies outside DOD will be governed by AR 25–55, AR 340–21, AR 600–37, and this part. Procedures for release of certain other records and information is contained in AR 20–1, AR 27–20, AR 27–40, AR 40–66, AR 195–2, AR 360–1, and AR 600–85. Installation drug and alcohol offices may be provided an extract of DA Form 3997 (Military Police Desk Blotter) for offenses indicating excessive use of alcohol (for example, drunk driving or disorderly conduct) or illegal use of drugs.

(b) Installation provost marshals are the release authorities for military police records under their control. They may release criminal record information to other activities as prescribed in AR 25–55 and AR 340–21, and this part.

(c) Authority to deny access to criminal records information rests with the initial denial authority (IDA) for the FOIA and the access and amendment refusal authority (AARA) for Privacy Acts cases, as addressed in AR 25–55 and AR 340–21.

§ 635.11 Release of information under the Freedom of Information Act (FOIA).

(a) The release and denial authorities for all FOIA cases concerning military police records include provost marshals and the Commander, USACIDC. Authority to act on behalf of the Commander, USACIDC is delegated to the Director, USACRC.

(b) FOIA requests from members of the press will be coordinated with the installation public affairs officer prior to release of records under the control of the installation provost marshal. When the record is on file at the USACRC the request must be forwarded to the Director, USACRC.

(c) Requests will be processed as prescribed in AR 25–55 and as follows:

(1) The provost marshal will review requested reports to determine if any portion is exempt from release. Any discretionary decision to disclose information under the FOIA should be made only after full and deliberate consideration of the institutional, commercial, and personal privacy interests that could be implicated by disclosure of the information.

(2) Statutory and policy questions will be coordinated with the local staff judge advocate.

(3) Coordination will be completed with the local USACIDC activity to ensure that the release will not interfere with a criminal investigation in progress or affect final disposition of an investigation.

(4) If it is determined that a portion of the report, or the report in its entirety will not be released, the request to include a copy of the MPR or other military police records will be forwarded to the Director, USACRC, ATTN: CICR-FP, 6010 6th Street, Fort Belvoir, VA 22060–5585. The requestor will be informed that their request has been sent to the Director, USACRC, and provided the mailing address for the USACRC. When forwarding FOIA requests, the outside of the envelope will be clearly marked ''FOIA REQUEST.''

(5) A partial release of information by a provost marshal is permissible when partial information is acceptable to the requester. (An example would be the deletion of a third party's social security number, home address, and telephone number, as permitted by law). If the requester agrees to the omission of exempt information, such cases do not constitute a denial. If the requester insists on the entire report, a copy of the report and the request for release will be forwarded to the Director, USACRC. There is no requirement to coordinate such referrals at the installation level. The request will simply be forwarded to the Director, USACRC for action.

(6) Requests for military police records that have been forwarded to USACRC and are no longer on file at the installation provost marshal office will be forwarded to the Director, USACRC for processing.

(7) Requests concerning USACIDC reports of investigation or USACIDC files will be referred to the Director, USACRC. In each instance, the requestor will be informed of the referral and provided the Director, USACRC address.

(8) Requests concerning records that are under the supervision of an Army activity, or other DOD agency, will be

referred to the appropriate agency for response.

§ 635.12 Release of Information under the Privacy Act of 1974.

(a) Military police records may be released according to provisions of the Privacy Act of 1974, as implemented by AR 340–21 and this part.

(b) The release and denial authorities for all Privacy Act cases concerning military police records are provided in § 635.10 of this part.

(c) Privacy Act requests for access to a record, when the requester is the subject of that record, will be processed as prescribed in AR 340–21.

§ 635.13 Amendment of records.

(a) *Policy.* An amendment of records is appropriate when such records are established as being inaccurate, irrelevant, untimely, or incomplete. Amendment procedures are not intended to permit challenging an event that actually occurred. For example, a request to remove an individual's name as the subject of a MPR would be proper providing credible evidence was presented to substantiate that a criminal offense was not committed or did not occur as reported. Expungement of a subject's name from a record because the commander took no action or the prosecutor elected not to prosecute normally will not be approved. In compliance with DOD policy, an individual will still remain entered in the Defense Clearance Investigations Index (DCII) to track all reports of investigation.

(b) *Procedures.* (1) Installation provost marshals will review amendment requests. Upon receipt of a request for an amendment of a military police record that is five or less years old, the installation provost marshal will gather all relevant available records at their location. A decision to grant or deny the request will be made by the Commanding General, USACIDC. In accordance with AR 340–21, paragraph 1–7l, the Commanding General, USACIDC is the sole access and amendment authority for criminal investigation reports and military police reports. Access and amendment refusal authority is not delegable. If the decision is made to amend a MPR, a supplemental DA Form 3975 will be prepared. The supplemental DA Form 3975 will change information on the original DA Form 3975 and will be mailed to the Director, USACRC with the amendment request from the requestor as an enclosure. The Director, USACRC will file the supplemental DA Form 3975 with the original MPR.

(2) Requests to amend military police documents that are older than five years will be coordinated through the Director, USACRC. The installation provost marshal will provide the Director, USACRC a copy of an individual's request to amend a military police record on file at the USACRC. If the Director, USACRC receives an amendment request, the correspondence with any documentation on file at the USACRC will be sent to the originating provost marshal office. The installation provost marshal will review the request and either approve the request or forward it to the Director, USACRC for denial. A copy of the provost marshal's decision must be sent to the Director, USACRC to be filed in the USACRC record. If an amendment request is granted, copies of the supplemental DA Form 3975 will be provided to each organization, activity, or individual who received a copy of the original DA Form 3975.

(3) If the provost marshal office no longer exists, the request will be staffed with the major Army commander that had oversight responsibility for the provost marshal office at the time the DA Form 3975 was originated.

§ 635.14 Accounting for military police record disclosure.

(a) AR 340–21 prescribes accounting policies and procedures concerning the disclosure of military police records.

(b) Provost Marshals will develop local procedures to ensure that disclosure data requirements by AR 340–21 are available on request.

§ 635.15 Release of law enforcement information furnished by foreign governments or international organizations.

(a) Information furnished by foreign governments or international organizations is subject to disclosure, unless exempted by AR 25–55, AR 340–21, or federal statutes or executive orders.

(b) Information may be received from a foreign source under an express pledge of confidentiality as described in AR 25–55 and AR 340–21 (or under an implied pledge of confidentiality given prior to September 27, 1975).

(1) Foreign sources will be advised of the provisions of the Privacy Act of 1974, the FOIA, and the general and specific law enforcement exemptions available, as outlined in AR 340–21 and AR 25–55.

(2) Information received under an express promise of confidentiality will be annotated in the MPR or other applicable record.

(3) Information obtained under terms of confidentiality must clearly aid in furthering a criminal investigation.

(c) Denial recommendations concerning information obtained under a pledge of confidentiality, like other denial recommendations, will be forwarded by the records custodian to the appropriate IDA or AARA per AR 25–55 or AR 340–21.

(d) Release of U.S. information (classified military information or controlled unclassified information) to foreign governments is accomplished per AR 380–10.

Subpart C—Offense Reporting

§ 635.16 General.

(a) This subpart establishes policy for reporting founded criminal offenses by Army installation and major Army command provost marshal offices.

(b) This subpart prescribes reporting procedures, which require the use of the COPS MPRS and a systems administrator to ensure that the system is properly functioning. Reporting requirements include-

(1) Reporting individual offenders to the USACRC, NCIC, CJIS, and the DOD.

(2) *Crime reports to the DOD.* DOD collects data from all the Services utilizing the Defense Incident-Based Reporting System (DIBRS). The Army inputs its data into DIBRS utilizing COPS. Any data reported to DIBRS is only as good as the data reported into COPS, so the need for accuracy in reporting incidents and utilizing proper offense codes is great. DIBRS data from DOD is eventually sent to the Department of Justice's National Incident-Based Reporting System (NIBRS). The data is eventually incorporated into the Uniform Crime Report.

(c) A provost marshal office initiating a DA Form 3975 or other military police investigation has reporting responsibility explained throughout this subpart and this part in general.

(d) In the event the provost marshal office determines that their office does not have investigative responsibility or authority, the MPR will be terminated and the case cleared by exceptional clearance. A case cleared by exceptional clearance is closed by the provost marshal when no additional investigative activity will be performed or the case is referred to another agency. If a case is transferred to the provost marshal from another law enforcement investigation agency the provost marshal office will have all reporting responsibility using the COPS MPRS system.

§ 635.17 Military Police Report.

(a) *General use.* DA form 3975 is a multipurpose form used to—

(1) Record all information or complaints received or observed by military police.

(2) Serve as a record of all military police and military police investigator activity.

(3) Document entries made into the COPS MPRS system and other automated systems.

(4) Report information concerning investigations conducted by civilian law enforcement agencies related to matters of concern to the U.S. Army.

(5) Advise commanders and supervisors of offenses and incidents involving personnel or property associated with their command or functional responsibility.

(6) Report information developed by commanders investigating incidents or conducting inspections that result in the disclosure of evidence that a criminal offense has been committed.

(b) *Special use.* The DA Form 3975 will be used to–

(1) Transmit completed DA Form 3946 (Military Police Traffic Accident Report). This will include statements, sketches, or photographs that are sent to a commander or other authorized official.

(2) Transmit the DD Form 1805 (U.S. District Court Violation Notice) when required by local installation or U.S. Magistrate Court policy. The DA Form 3975 is used to advise commanders or supervisors that military, civilian, or contract personnel have been cited on a DD Form 1805.

(3) Match individual subjects with individual victims or witnesses, and founded criminal offenses. This is a federal statutory requirement. This is done using the relationships tab within COPS MPRS.

(4) Document victim/witness liaison activity.

(c) *Distribution.* The DA Form 3975 will be prepared in three copies, signed by the Provost Marshal or a designated representative, and distributed as follows—

(1) Original to USACRC. Further information, arising or developed at a later time, will be forwarded to USACRC using a supplemental DA Form 3975. Reports submitted to USACRC will include a good, legible copy of all statements, photographs, sketches, laboratory reports, and other information that substantiates the offense or facilitates the understanding of the report. The USACRC control number must be recorded on every DA Form 3975 sent to the USACRC. A report will not be delayed for adjudication or commander's action beyond 45 days.

(2) One copy retained in the provost marshal's files.

(3) One copy forwarded through the field grade commander to the immediate commander of each subject or organization involved in an offense.

(d) *Changing reports for unfounded offenses.* If an offense is determined to be unfounded, after the case has been forwarded to USACRC, the following actions will be completed:

(1) A supplemental DA Form 3975, using the same MPR number and USACRC control number will be submitted stating the facts of the subsequent investigation and that the case is unfounded.

(2) A copy of the supplemental DA Form 3975 will be provided to those agencies or activities that received a copy of the completed DA Form 3975 at the time of submission to USACRC and to the commander for action.

§ 635.18 Identifying criminal incidents and subjects of investigation.

(a) An incident will not be reported as a founded offense unless adequately substantiated by police investigation. A person or entity will be reported as the subject of an offense on DA Form 3975 when credible information exists that the person or entity may have committed a criminal offense or are otherwise made the object of a criminal investigation. The decision to title a person is an operational rather than a legal determination. The act of titling and indexing does not, in and of itself, connote any degree of guilt or innocence; but rather, ensures that information in a report of investigation can be retrieved at some future time for law enforcement and security purposes. Judicial or adverse administrative actions will not be based solely on the listing of an individual or legal entity as a subject on DA Form 3975.

(b) A known subject will be reported to the USACRC when the suspected offense is punishable by confinement of six months or more. The COPS MPRS will be used to track all other known subjects. A subject can be a person, corporation, or other legal entity, or organization about which credible information exists that would cause a reasonable person to suspect that the person, corporation, other legal entity or organization may have committed a criminal offense, or otherwise make them the object of a criminal investigation.

(c) When investigative activity identifies a subject, all facts of the case must be considered. When a person, corporation, or other legal entity is entered in the subject block of the DA Form 3975, their identity is recorded in DA automated systems and the DCII. Once entered into the DCII, the record can only be removed in cases of mistaken identity. This policy is consistent with DOD reporting requirements. The Director, USACRC enters individuals from DA Form 3975 into the DCII.

§ 635.19 Offense codes.

(a) The offense code describes, as nearly as possible, the complaint or offense by using an alphanumeric code. Appendix C of AR 190–45 lists the offense codes that are authorized for use within the Army. This list will be amended from time to time based on new reporting requirements mandated by legislation or administrative procedures. MACOM commanders and installation provost marshals will be notified by special letters of instruction issued in numerical order from HQDA, Office of the Provost Marshal General (DAPM–MPD–LE) when additions or deletions are made to list. The COPS MPRS module will be used for all reporting requirements.

(b) MACOMs and installations may establish local offense codes in category 2 (major Army command and installation codes) for any offense not otherwise reportable. Locally established offense codes will not duplicate, or be used as a substitute for any offense for which a code is contained for other reportable incidents. Category 2 incidents are not reported to the Director, USACRC or the DOJ. If an offense occurs meeting the reporting description contained in Appendix C of AR 190–45, that offense code takes precedence over the local offense code. Local offense codes may be included, but explained, in the narrative of the report filed with the USACRC. Use the most descriptive offense code to report offenses.

(c) Whenever local policy requires the provost marshal to list the subject's previous offenses on DA Form 3975, entries will reflect a summary of disposition for each offense, if known.

§ 635.20 Military Police Codes (MPC).

(a) MPCs identify individual provost marshal offices. The Director, USACRC will assign MPCs to provost marshal offices.

(b) Requests for assignment of a MPC will be included in the planning phase of military operations, exercises, or missions when law enforcement operations are anticipated. The request for a MPC will be submitted as soon as circumstances permit, without jeopardizing the military operation to HQDA, Office of the Provost Marshal General (DAPM–MPD–LE). Consistent

with security precautions, MACOMs will immediately inform HQDA, Office of the Provost Marshal General (DAPM–MPD–LE) when assigned or attached military police units are notified for mobilization, relocation, activation, or inactivation.

(c) When a military police unit is alerted for deployment to a location not in an existing provost marshal's operational area, the receiving MACOM or combatant commander will request assignment of an MPC number from HQDA, Office of the Provost Marshal General (DAPM–MPD–LE) providing the area of operations does not have an existing MPC number. The receiving MACOM or Unified Combatant Commander is further responsible for establishing an operational COPS system for the deployment.

§ 635.21 USACRC control numbers.

(a) Case numbers to support reporting requirements will be issued by the Director, USACRC to HQDA (DAPM–MPD–LE) prior to the beginning of a new calendar year. HQDA, Office of the Provost Marshal General (DAPM–MPD–LE) will release block numbers to each MACOM for assignment to their installation provost marshals. To ensure accuracy in reporting criminal incidents, USACRC control numbers will be used only one time and in sequence. Every MPR sent to the USACRC will have a USACRC control number reported. Violation of this policy could result in significant difficulties in tracing reports that require corrective action.

(b) Each MACOM will report the USACRC control numbers they have assigned to their installations by January 15th of each year. If during the calendar year the MACOM reassigns control numbers from one installation to another, HQDA, Office of the Provost Marshal General (DAPM–MPD–LE) will be notified. The Director USACRC will receive an information copy of such notification from the MACOM provost marshal office.

(c) USACRC control numbers will be issued along with each newly assigned MPC.

(d) When the deploying unit will be located in an area where there is an existing provost marshal activity, the deploying unit will use the MPC number and USACRC control numbers of the host provost marshal.

§ 635.22 Reserve Component, U.S. Army Reserve, and Army National Guard Personnel.

(a) When in a military duty status pursuant to official orders (Federal status for National Guard) Reserve and National Guard personnel will be reported as active duty. Otherwise they will be reported as civilians.

(b) The DA Form 3975 and DA Form 4833 will be forwarded to the individual's continental U.S. Army Commander, state adjutant, or 7th Army Reserve Command, as appropriate. The forwarding correspondence will reflect this part as the authority to request disposition of the individual.

§ 635.23 DA Form 4833 (Commander's Report of Disciplinary or Administrative Action).

(a) *Use.* DA Form 4833 is used with DA Form 3975 to—

(1) Record actions taken against identified offenders.

(2) Report the disposition of offenses investigated by civilian law enforcement agencies.

(b) *Preparation by the provost marshal.* The installation provost marshal initiates this critical document and is responsible for its distribution and establishing a suspense system to ensure timely response by commanders. Disposition reports are part of the reporting requirements within DA, DOD, and DOJ.

(c) *Completion by the unit commander.* Company, troop, and battery level commanders are responsible and accountable for completing DA Form 4833 with supporting documentation in all cases investigated by MPI, civilian detectives employed by the Department of the Army, and the PMO. The Battalion Commander or the first Lieutenant Colonel in the chain of command is responsible and accountable for completing DA Form 4833 with support documentation (copies of Article 15s, court-martial orders, reprimands, etc.) for all USACIDC investigations. The commander will complete the DA Form 4833 within 45 days of receipt.

(1) Appropriate blocks will be checked and blanks annotated to indicate the following:

(i) Action taken (for example, judicial, nonjudicial, or administrative). In the event the commander takes action against the soldier for an offense other than the one listed on the DA Form 3975, the revised charge or offense will be specified in the REMARKS section of the DA Form 4833.

(ii) Sentence, punishment, or administrative action imposed.

(iii) Should the commander take no action, the DA Form 4833 must be annotated to reflect that fact.

(2) If the commander cannot complete the DA Form 4833 within 45 days, a written memorandum is required to explain the circumstances. The delay will have an impact on other reporting requirements (*e.g.*, submitting fingerprint cards to the FBI).

(d) *Procedures when subjects are reassigned.* When the subject of an offense is reassigned, the provost marshal will forward the DA Form 3975, DA Form 4833, and all pertinent attachments to the gaining installation provost marshal who must ensure that the new commander completes the document. Copies of the documents may be made and retained by the processing provost marshal office before returning the documents to the losing installation provost marshal for completion of automated entries and required reports.

(e) *Report on subjects assigned to other installations.* When the DA Form 3975 involves a subject who is assigned to another installation, the initiating provost marshal will forward the original and two copies of DA Form 4833 to the provost marshal of the installation where the soldier is permanently assigned. The procedures in paragraph (d) of this section will be followed for soldiers assigned to other commands.

(f) *Offenses not reportable to USACRC.* When the offense is not within a category reportable to USACRC, the original DA Form 4833 is retained by the provost marshal. Otherwise, the original is sent to the Director, USACRC for filing with the MPR.

(g) *Civilian court proceedings.* If a soldier is tried in a civilian court, and the provost marshal has initiated a MPR, the provost marshal must track the civilian trial and report the disposition on DA Form 4833 as appropriate. That portion of the signature block of DA Form 4833 that contains the word ''Commanding'' will be deleted and the word ''Reporting'' substituted. The provost marshal or other designated person will sign DA Form 4833 before forwarding it to USACRC.

(h) *Dissemination to other agencies.* A copy of the completed DA Form 4833 reflecting offender disposition will also be provided to those agencies or offices that originally received a copy of DA Form 3975 when evidence is involved. The evidence custodian will also be informed of the disposition of the case. Action may then be initiated for final disposition of evidence retained for the case now completed.

(i) *Review of offender disposition by the provost marshal.* On receipt of DA Form 4833 reflecting no action taken, the provost marshal will review the MPR. The review will include, but is not limited to the following—

(1) Determination of the adequacy of supporting documentation.

(2) Whether or not coordination with the supporting Staff Judge Advocate should have been sought prior to dispatch of the report to the commander for action.

(3) Identification of functions that warrant additional training of military police or security personnel (for example, search and seizure, evidence handling, or rights warning).

(j) *Offender disposition summary reports*. Provost marshals will provide the supported commander (normally, the general courts-martial convening authority or other persons designated by such authority) summary data of offender disposition as required or appropriate. Offender disposition summary data will reflect identified offenders on whom final disposition has been reported. These data will be provided in the format and at the frequency specified by the supported commander.

§ 635.24 Updating the COPS MPRS.

Installation provost marshals will establish standard operating procedures to ensure that every founded offense is reported into the COPS MPRS. Timely and accurate reporting is critical. If a case remains open, changes will be made as appropriate. This includes reporting additional witnesses and all aspects of the criminal report.

§ 635.25 Submission of Criminal History Data to the CJIS.

(a) *General*. This paragraph establishes procedures for submitting criminal history data (fingerprint cards) to CJIS when the provost marshal has completed a criminal inquiry or investigation. The policy only applies to members of the Armed Forces and will be followed when a military member has been read charges and the commander initiates proceedings for—

(1) *Field Grade Article 15, Uniform Code of Military Justice*. Initiation refers to a commander completing action to impose non-judicial punishment. Final disposition shall be action on appeal by the next superior authority, expiration of the time limit to file an appeal, or the date the military member indicates that an appeal will not be submitted.

(2) *A special or general courts-martial*. Initiation refers to the referral of court-martial charges to a specified court by the convening authority or receipt by the commander of an accused soldier's request for discharge in lieu of court-martial. Final disposition of military judicial proceedings shall be action by the convening authority on the findings and sentence, or final approval of a discharge in lieu of court-martial. The procedures in this subpart meet administrative and technical requirements for submitting fingerprint cards and criminal history information to CJIS. No variances are authorized. Results of summary court-martial will not be reported to the FBI.

(3) In instances where final action is taken by a magistrate, the provost marshal will complete the DA Form 4833.

(4) Provost marshal offices will submit fingerprint cards on subjects apprehended as a result of Drug Suppression Team investigations and operations unless the USACIDC is completing the investigative activity for a felony offense. In those cases, the USACIDC will complete the fingerprint report process.

(b) *Procedures*. The following procedures must be followed when submitting criminal history data to CJIS.

(1) Standard FBI fingerprint cards will be used to submit criminal history data to CJIS. FBI Form FD 249, (Suspect Fingerprint Card) will be used when a military member is a suspect or placed under apprehension for an offense listed in Appendix D of AR 190–45. Two FD 249s will be completed. One will be retained in the provost marshal file. The second will be sent to the Director, USACRC and processed with the MPR as prescribed in this subpart. A third set of prints will also be taken on the FBI Department of Justice (DOJ) Form R–84 (Final Disposition Report). The R–84 requires completion of the disposition portion and entering of the offenses on which the commander took action. Installation provost marshals are authorized to requisition the fingerprint cards by writing to FBI, J. Edgar Hoover Building, Personnel Division, Printing Unit, Room lB973, 925 Pennsylvania Ave., NW., Washington, DC 20535–0001.

(2) Fingerprint cards will be submitted with the MPR to the Director, USACRC, ATTN: CICR–CR, 6010 6th Street, Fort Belvoir, VA 22060–5585. The Director, CRC will forward the fingerprint card to CJIS. The USACRC is used as the central repository for criminal history information in the Army. They also respond to inquiries from CJIS, local, state and other federal law enforcement agencies.

(3) Submission of the MPR with the FD 249 to USACRC will normally occur upon a commander's initiation of judicial or nonjudicial proceedings against a military member. If final disposition of the proceeding is anticipated within 60 days of command initiation of judicial or nonjudicial proceedings, the FD 249 may be held and final disposition recorded on FD 249. Provost marshals and commanders must make every effort to comply with the 60 days reporting requirement to ensure that the FD Form 249 is used as the primary document to submit criminal history to CJIS. Approval of a discharge in lieu of court-martial will be recorded as a final disposition showing the nature and character of the discharge in clear English (*e.g.*, resignation in lieu of court-martial; other than honorable discharge).

(4) If the commander provides the DA Form 4833 after the 60th day, a letter of transmittal will be prepared by the provost marshal forwarding the FBI (DOJ) R–84 with the DA Form 4833 to the USACRC within 5 days after disposition. Submission of fingerprint cards shall not be delayed pending appellate actions. Dispositions that are exculpatory (*e.g.*, dismissal of charges, acquittal) shall also be filed.

(5) The procedures for submitting fingerprint cards will remain in effect until automated systems are in place for submission of fingerprints electronically.

§ 635.26 Procedures for reporting Absence without Leave (AWOL) and Desertion Offenses.

(a) *AWOL reporting procedures*.

(1) The commander will notify the installation provost marshal in writing within 24 hours after a soldier has been reported AWOL.

(2) The provost marshal will initiate an information blotter entry.

(3) If the AWOL soldier surrenders to the parent unit or returns to military control at another installation, the provisions of AR 630–10 will be followed.

(4) On receipt of written notification of the AWOL soldier's return or upon apprehension, the provost marshal will initiate a reference blotter entry indicating the soldier's return to military control and will prepare an initial DA Form 3975, reflecting the total period of unauthorized absence, and the DA Form 4833. Both of these documents will be forwarded through the field grade commander to the unit commander.

(5) The unit commander will report action taken on the DA Form 4833 no later than the assigned suspense date or provide a written memorandum to the provost marshal explaining the delay.

(6) An original DD Form 460 (Provisional Pass) is issued to the soldier to facilitate their return to the parent unit. DD Form 460 will not be required if the provost marshal elects to return the soldier through a different means.

(7) If the soldier is apprehended at or returns to an installation other than his or her parent installation DA Form 3975 and 4833 with a copy of DD Form 460 will be sent to the parent installation provost marshal. The parent installation provost marshal will initiate an information blotter entry reflecting the AWOL soldiers return to military control. A DA Form 3975 and 4833 with an appropriate suspense will be sent through the field grade commander to the unit commander. On return of the completed DA Form 4833 from the unit commander, the original and one copy will be sent to the apprehending provost marshal. The parent installation provost marshal may retain a copy of DA Form 3975 and DA Form 4833.

(b) *Desertion reporting procedures.* (1) The unit commander must comply with the provisions of AR 630–10 when reporting a soldier as a deserter.

(2) On receipt of the DD Form 553 (Deserter/Absentee Wanted by the Armed Forces), the provost marshal will—

(i) Initiate a DA Form 3975 and a blotter entry reflecting the soldier's desertion status.

(ii) Complete portions of DD Form 553 concerning the soldier's driver's license and vehicle identification. In the remarks section, add other information known about the soldier such as confirmed or suspected drug abuse; history of violent acts; history of escapes; attempted escapes from custody; suicidal tendencies; suspicion of involvement in crimes of violence (for which a charge sheet has been prepared and forwarded); history of unauthorized absences; and any other information useful in the apprehension process or essential to protect the deserter or apprehending authorities.

(iii) An MPR number and a USACRC control number will be assigned to the case and be included in the remarks section of the DD Form 553.

(iv) The DD Form 553 must be returned to the unit commander within 24 hours.

(v) If the deserter surrenders to or is apprehended by the parent installation provost marshal, the provost marshal will telephonically verify the deserter's status with the U.S. Army Deserter Information Point (USADIP). A reference blotter entry will be completed changing the soldier's status from desertion to return to military control.

(vi) If the deserter surrenders to or is apprehended by an installation not the parent installation, the provost marshal will telephonically verify the deserter's status with USADIP. An information military police report will be prepared, utilizing the CRC number from the original military police report prepared by the parent installation. A blotter entry will also be prepared.

(vii) A DD Form 616 (Report of Return of Absentee) will be completed when deserters are apprehended or surrender to military authority. The USACRC control number assigned to the DD Form 553 will be included in the remarks section of the DD Form 616.

(viii) Upon return of the deserter to military control, DA Forms 3975, 2804 (Crime Records Data), fingerprint card and 4833 will be initiated. The MPR number and USACRC control number will be recorded on all four forms.

(ix) The original DA Form 3975 and other pertinent documents will be sent to the Director, USACRC. The DA Form 4833 must include the commander's action taken, to include the Commander, Personnel Control Facility, or other commander who takes action based on the desertion charge.

§ 635.27 Vehicle Registration System.

The Vehicle Registration System (VRS) is a module within COPS. Use of VRS to register vehicles authorized access to Army installations is mandated in AR 190–5. Within VRS there are various tabs for registration of vehicles authorized access to an installation, to include personal data on the owner of the vehicle. There are also tabs for registering weapons, bicycles, and pets. Information on individuals barred entry to an installation is also maintained within VRS.

§ 635.28 Domestic violence and Protection Orders.

(a) Responding to incidents of spouse abuse requires a coordinated effort by law enforcement, medical, and social work personnel, to include sharing information and records as permitted by law and regulation. AR 608–18 contains additional information about domestic violence and protective orders.

(b) Appendix C of AR 190–45 includes specific offense codes for domestic violence. All domestic violence incidents will be reported to the local PMO. All reported domestic violence incidents will be entered into MPRS, utilizing DA Form 3975. These codes will be utilized in addition to any other offense code that may be appropriate for an incident. For example, a soldier strikes his or her spouse. When entering the offense data into MPRS, both the offense code for assault (i.e. 5C2B) and the offense code for spouse abuse (from the 5D6 series) will be entered.

(c) A military Protection Order is a written lawful order issued by a commander that orders a soldier to avoid contact with his or her spouse or children. Violations of a military Protection Order must be reported on DA Form 3975, entered into COPS, and entered into NCIC. Violations of a military Protection Order may be violations of Article 92, UCMJ. The commander should provide a written copy of the order within 24 hours of its issuance to the person with whom the member is ordered not to have contact. A copy should be forwarded to the installation Family Advocacy Program Manager (FAPM), the Chief, Social Work Service, and the installation military police.

(d) A civilian Protection Order is an order issued by a judge, magistrate or other authorized civilian official, ordering an individual to avoid contact with his or her spouse or children. Pursuant to the Armed Forces Domestic Security Act a civilian protection order has the same force and effect on a military installation as such order has within the jurisdiction of the court that issued the order. Violations of a civilian Protection Order must be reported on DA Form 3975, entered into COPS, and entered into NCIC.

Subpart D—Army Quarterly Trends and Analysis Report

§ 635.29 General.

(a) This subpart prescribes policies and procedures for the coordination and standardization of crime statistics reporting with HQDA. Crime statistical reports and trends provided to HQDA and other agencies and those related to special interests inquiries, the media, and the public must reflect uniformity in terminology, methods of presentation, and statistical portrayal to preclude misinterpretation of information.

(b) Any report containing Army-wide aggregate crime data or statistics addressed to the Secretary of the Army, Chief of Staff of the Army, or Vice Chief of Staff of the Army will be coordinated and cleared with HQDA, Office of the Provost Marshal General (DAPM–MPD–LE). Correspondence and reports will be coordinated with HQDA, Office of the Provost Marshal General (DAPM–MPD–LE) prior to release to any agency, activity, or individual.

(c) HQDA staff agencies and MACOMs authorized by regulation or statute to conduct independent investigations, audits, analyses, or inquiries need not coordinate reported information with HQDA, Office of the Provost Marshal General (DAPM–MPD–LE) unless the information contains crime data for the Army as a whole. For

example, reports submitted by USACIDC containing only USACIDC investigative data need not be coordinated with HQDA, Office of the Provost Marshal General (DAPM–MPD–LE).

§ 635.30 Crime rate reporting.

(a) The USACRC is the Army's collection point and analytic center for all Army aggregate crime data. Requests for Army-wide crime data reports will be forwarded through HQDA, Office of the Provost Marshal General (DAPM–MPD–LE) to the Director, USACRC. Replies will be routed back through HQDA Office of the Provost Marshal General (DAPM–MPD–LE) where they will be coordinated, as appropriate, prior to release. Requests for USACIDC, MACOM, or subordinate command specific crime data reports can be made directly to the specific command. Replies need not be coordinated with HQDA.

(b) Requests for Army aggregate crime reports are limited to data collected and accessible through the Automated Criminal Investigative Reporting System (ACIRS) and COPS.

(c) Routine collection of MACOM crime data, for use in Army-wide database, will be limited to that data collected by the above systems. MACOMs may determine internal data collection requirements.

(d) All provost marshal crime data will be recorded and forwarded by installations through MACOMS using the COPS system.

(e) In support of the Secretary of the Army and the Office of the Chief of Staff of the Army, the Chief, Operations Division, Office of the Provost Marshal General, will determine the requirements for routine publication of Army aggregate crime statistics.

(f) Normally, raw data will not be released without analysis on routine or non-routine requests. Comparison of MACOM crime data is generally not reported and should be avoided. General categories of CONUS or OCONUS are appropriate.

Subpart E—Victim and Witness Assistance Procedures

§ 635.31 General.

(a) This subpart implements procedures to provide assistance to victims and witnesses of crimes that take place on Army installations and activities. The procedures in this subpart apply to—

(1) Every victim and witness.

(2) Violations of the UCMJ, including crimes assimilated under the Assimilative Crimes Act reported to or investigated by military police.

(3) Foreign nationals employed or visiting on an Army installation OCONUS.

(b) Provost marshal personnel should refer to AR 27–10, Chapter 18, for additional policy guidance on the Army Victim/Witness Program.

§ 635.32 Procedures.

(a) As required by Federal law, Army personnel involved in the detection, investigation, and prosecution of crimes must ensure that victims and witnesses rights are protected. Victims rights include—

(1) The right to be treated with fairness, dignity, and a respect for privacy.

(2) The right to be reasonably protected from the accused offender.

(3) The right to be notified of court proceedings.

(4) The right to be present at all public court proceedings related to the offense, unless the court determines that testimony by the victim would be materially affected if the victim heard other testimony at trial, or for other good cause.

(5) The right to confer with the attorney for the Government in the case.

(6) The right to restitution, if appropriate.

(7) The right to information regarding conviction, sentencing, imprisonment, and release of the offender from custody.

(b) In keeping with the requirements listed in paragraph (a) of this section, provost marshals must ensure that—

(1) All law enforcement personnel are provided copies of DD Form 2701 (Initial Information for Victims and Witnesses of Crime).

(2) A victim witness coordinator is appointed in writing.

(3) Statistics are collected and reported into COPS.

(4) Coordination with the installation staff judge advocate victim witness coordinator occurs to ensure that individuals are properly referred for information on restitution, administrative, and judicial proceedings.

(5) Coordination with installation Family Advocacy Program's Victim Advocate occurs to support victims of spouse abuse. Victim Advocacy services include crisis intervention, assistance in securing medical treatment for injuries, information on legal rights and proceedings, and referral to military and civilian shelters and other resources available to victims.

§ 635.33 Notification.

(a) In addition to providing crime victims and witnesses a DD Form 2701, law enforcement personnel must ensure that individuals are notified about—

(1) Available military and civilian emergency medical care.

(2) Social services, when necessary.

(3) Procedures to contact the staff judge advocate victim/witness liaison office for additional assistance.

(b) Investigating law enforcement personnel, such as military police investigators—

(1) Must ensure that victims and witnesses have been offered a DD Form 2701. If not, investigating personnel will give the individual a copy.

(2) In coordination with the provost marshal victim witness coordinator, provide status on investigation of the crime to the extent that releasing such information does not jeopardize the investigation.

(3) Will, if requested, inform all victims and witnesses of the apprehension of a suspected offender.

§ 635.34 Statistical reporting requirements.

(a) DOD policies on victim witness assistance require reporting of statistics on the number of individuals who are notified of their rights. The DA Form 3975 provides for the collection of statistical information.

(b) The COPS system supports automated reporting of statistics. HQDA, Office of the Provost Marshal General (DAPM–MPD–LE) as the program manager may require periodic reports to meet unique requests for information.

(c) It is possible that a victim or witness may initially decline a DD Form 2701. As the case progresses, the individual may request information. If a case is still open in the provost marshal office, the provost marshal victim witness coordinator shall provide the DA Form 2701 to the individual and update the records. Once the case is referred to the staff judge advocate or law enforcement activity ceases, COPS will not be updated.

[FR Doc. 04–16227 Filed 7–15–04; 8:45 am]

BILLING CODE 3710–08–P

DEPARTMENT OF AGRICULTURE

Forest Service

36 CFR Part 294

RIN 0596–AC10

Special Areas; State Petitions for Inventoried Roadless Area Management

AGENCY: Forest Service, USDA.

ACTION: Notice of proposed rulemaking; request for comment.

SUMMARY: The Department of Agriculture, Forest Service is proposing changes to Subpart B of Title 36, Code of Federal Regulations, Protection of Inventoried Roadless Areas (the roadless rule), adopted on January 12, 2001 (66 FR 3244). This proposed rule would replace the existing rule with a petitioning process that would provide Governors an opportunity to seek establishment of management requirements for National Forest System inventoried roadless areas within their States. This opportunity for State petitions would be available for 18 months following the effective date of the final rule. It is anticipated that this timeframe will be sufficient for States to collaborate effectively with local governments, stakeholders and other interested parties to develop proposals that consider a full range of public input. A State petition would be evaluated and, if accepted by the Secretary of Agriculture, the Forest Service would initiate subsequent State-specific rulemaking for the management of inventoried roadless areas in cooperation with the State involved in the petitioning process, and in consultation with stakeholders and experts.

In proposing this rule and seeking public comment, the agency is responding to the continued controversy, policy concerns, and legal uncertainty surrounding the implementation of the roadless rule. Public comments received will be considered in the development of the final rule.

DATES: Comments must be received in writing by September 14, 2004.

ADDRESSES: Send written comments by mail to: Content Analysis Team, Attn: Roadless State Petitions, USDA Forest Service, P.O. Box 221090, Salt Lake City, UT 84122; by facsimile to (801) 517–1014; or by e-mail at *statepetitionroadless@fs.fed.us*. If you intend to submit comments in batched e-mails from the same server, please be aware that electronic security safeguards on Forest Service and Department of Agriculture computer systems for prevention of commercial spamming may limit batched e-mail access. However, the Forest Service is interested in receiving all comments on this proposed rule. Therefore, please call (801) 517–1020 to facilitate transfer of comments in batched e-mail messages. Comments also may be submitted via the World Wide Web/Internet Web site *http://www.regulations.gov*. Please note that all comments, including names and addresses when provided, will be placed in the record and will be available for public inspection and copying. The agency cannot confirm receipt of comments. Individuals wishing to inspect comments should call Jody Sutton at (801) 517–1023 to schedule an appointment.

FOR FURTHER INFORMATION CONTACT: Dave Barone, Planning Specialist, Ecosystem Management Coordination Staff, Forest Service, USDA, (202) 205–1019.

SUPPLEMENTARY INFORMATION:

Background

The U.S. Department of Agriculture (USDA) Forest Service commitment to land stewardship and public service is the framework within which the agency manages natural resources as provided by law, regulation, and other legal authorities. Implicit in this statement is the agency's collaboration with public, private, and nonprofit partners. As a leader in natural resource conservation, the USDA Forest Service provides leadership in the conservation, management, and use of the Nation's forest, rangeland, and aquatic ecosystems.

The USDA Forest Service manages National Forest System (NFS) lands to maintain and enhance the quality of the environment to meet the Nation's current and future needs. Activities implemented consistent with land and resource management plans (forest plans) provide for sustainable management by restoring and maintaining species diversity and ecological productivity, and support recreation, water, timber, minerals, fish, wildlife, wilderness, and aesthetic values for current and future generations.

State governments are important partners in management of the Nation's land and natural resources. States, particularly in the West, own and manage large tracts of land with tremendous social and biological value. State governments have frequently pioneered innovative land management programs and policies. State governments exert considerable influence over statewide economic development and private land use, both of which significantly affect natural resource management. In addition, State conservation agencies' relationships with others offer additional partnership opportunities. Strong State and Federal cooperation regarding management of inventoried roadless areas can facilitate long-term, community-oriented solutions.

On January 12, 2001, the Department promulgated the roadless rule at 36 CFR part 294 (66 FR 3244), which fundamentally changed the Forest Service's longstanding approach to management of inventoried roadless areas by establishing nationwide prohibitions generally limiting, with some exceptions, timber harvest, road construction, and road reconstruction within inventoried roadless areas on NFS lands.

Concerns were immediately expressed by those most impacted by the roadless rule's prohibitions. These concerns included the sufficiency and the accuracy of the information available for public review during the rulemaking process; the inclusion of an estimated 2.8 million acres of roaded lands in the land base affected by the rule's prohibitions; the denial of requests to lengthen the public review period; the denial of cooperating agency status requested by several Western States; the sufficiency of the range of alternatives considered in the rulemaking process; the need for flexibility and exceptions to allow for needed resource management activities that would enhance or improve roadless values or characteristics; and the changes made in the proposed rule after the closure of the public comment period. Concerns were also expressed about applying one set of standards uniformly to every inventoried roadless area.

On May 4, 2001, the Secretary of Agriculture expressed the Administration's commitment to the objective of conserving inventoried roadless areas in the NFS, and also acknowledged concerns raised by local communities, tribes, and States impacted by the roadless rule. At that time, the Secretary indicated that USDA would move forward with a responsible and balanced approach to re-examining the roadless rule in an effort to address those concerns while enhancing roadless area values and characteristics. To meet this objective, management of inventoried roadless areas must address those activities having the greatest likelihood of altering, fragmenting, or otherwise degrading roadless area values and characteristics. Appropriate management of inventoried roadless areas must also address reasonable and legitimate concerns about how the agency provides for the conservation of roadless areas. For example, providing for outdoor recreation opportunities for fishing and hunting in remote areas may at times require access and active management activities to restore or maintain habitat conditions for the management of some fish and wildlife species.

On July 10, 2001, the Forest Service published an advance notice of

proposed rulemaking (ANPR) (66 FR 35918) seeking public comment concerning how best to proceed with long-term conservation and management of inventoried roadless areas. The ANPR also acknowledged that the future management of inventoried roadless areas would depend on a number of factors, such as court decisions, public comments, and the consideration of practical options and other administrative tools for amending the current roadless rule to address inventoried roadless area protection.

The Forest Service received over 726,000 responses to that ANPR. The responses represented two main points of view on natural resource management and perspectives on resource decisionmaking: (1) Emphasis on environmental protection and preservation, and support for making national decisions; and (2) emphasis on responsible active management, and support for local conservation decisions made through the land and resource management planning process. A 1,200-page summary of this public comment was prepared in May of 2002, and is available on the World Wide Web/Internet on the Forest Service Web site for Roadless Area Conservation at: *http://www.roadless.fs.fed.us*.

Until promulgation of the 2001 roadless rule, the Forest Service managed roadless areas based on individual forest plans. Forest plans have been developed for each unit of the NFS through a public notice and comment process, building on years of scientific findings and extensive public involvement in forest planning. Forest plans typically identify and recommend areas that would be appropriate to be designated as wilderness by the Congress, and provide guidance on activities and uses in these areas.

Litigation History

The roadless rule has been the subject of nine lawsuits in Federal district courts in Idaho, Utah, North Dakota, Wyoming, Alaska, and the District of Columbia. In one of these lawsuits, the U.S. District Court for the District of Idaho issued a preliminary injunction prohibiting implementation of the roadless rule on May 10, 2001.

The preliminary injunction decision was reversed by the U.S. Court of Appeals for the Ninth Circuit.

On June 10, 2003, a settlement agreement was reached in another of those lawsuits, the *State of Alaska* v. *USDA* litigation. In that settlement, the Department of Agriculture agreed to propose an amendment to the roadless rule to temporarily withdraw the Tongass National Forest in Alaska from the provisions of the rule, as well as to issue an ANPR to seek public comment on permanently withdrawing both the Tongass and the Chugach National Forests from the provisions of the roadless rule. On December 30, 2003, the Department adopted a final rule that temporarily withdrew the Tongass National Forest. Management of inventoried roadless areas on the Tongass is now governed by the existing forest plan. Pursuant to the current revised forest plans for the Tongass and the Chugach National Forests, road construction will not occur on approximately 90 percent of roadless area lands and timber management will not occur on over 95 percent of roadless area lands.

In still another lawsuit, on July 14, 2003, the U.S. District Court for the District of Wyoming found the roadless rule to be unlawful and ordered that the rule ''be permanently enjoined.'' That ruling has been appealed to the Tenth Circuit by intervenors.

Conclusion

USDA is committed to conserving and managing roadless areas and considers roadless areas an important component of the NFS. The Department believes that revising 36 CFR part 294 to replace the existing rule with a State petitioning process that will allow State-specific consideration of the needs of these areas is an appropriate solution to address the challenges of roadless area management on NFS lands.

States affected by the roadless rule have been keenly interested in inventoried roadless area management, especially the Western States where most of the agency's inventoried roadless areas are located. Collaborating and cooperating with States on the long-term strategy for the management of inventoried roadless areas on NFS lands would allow for the recognition of local situations and resolution of unique resource management challenges within a specific State. Collaboration with others who have a strong interest in the conservation and management of inventoried roadless areas would also help to ensure balanced management decisions that maintain the most important characteristics and values of those areas.

The State petitions under this proposed rule would have to include specific information and recommendations for the management requirements for individual inventoried roadless areas within a particular State. Petitions would have to be submitted to the Secretary of Agriculture within 18 months of the effective date of the final rule. USDA is seeking comments on the sufficiency of this timeframe. Petitions would be evaluated, and if accepted the Secretary would initiate subsequent rulemaking for inventoried roadless areas within that State. The Department's general petitioning process for the approval, amendment or repeal of rules (7 CFR 1.28) would remain available after expiration of the 18 month petitioning period.

The Secretary is considering the establishment of a national advisory committee to provide expert consultation on the implementation of this State-specific petition rulemaking process and seeks public input regarding whether to establish such a committee. The advisory committee would provide input regarding whether additional information is needed from a petitioner (proposed § 294.13 (a)(1)), the Secretary's response to a petition (proposed § 294.13 (a)(2)), the nature and extent of appropriate NEPA documentation associated with development of a State-specific rule, and the Secretary's decision on promulgating a State-specific rule (proposed § 294.15). The advisory committee would include members with expertise in fish and wildlife biology, fish and wildlife management, forest management, outdoor recreation, and other important disciplines, as well as representatives of State and local governments.

Regulatory Certifications

Regulatory Impact

This proposed rule has been reviewed under USDA procedures and Executive Order (E.O.) 12866, Regulatory Planning and Review. It has been determined that this is not an economically significant rule. This proposed rule would not have an annual effect of $100 million or more on the economy nor adversely affect productivity, competition, jobs, the environment, public health or safety, nor State or local governments. This proposed rule would not interfere with an action taken or planned by another agency. Finally, this action would not alter the budgetary impact of entitlements, grants, user fees, or loan programs or the rights and obligations of recipients of such programs. However, because this proposed rule raises novel legal or policy issues arising from legal mandates or the President's priorities, it has been designated as significant and, therefore, is subject to Office of Management and Budget (OMB) review in accordance with the principles set forth in E.O. 12866.

Moreover, this proposed rule has been considered in light of Executive Order

13272 regarding proper consideration of small entities and the Small Business Regulatory Enforcement Fairness Act of 1996 (SBREFA), which amended the Regulatory Flexibility Act (5 U.S.C. 601 *et seq.*). Predicting the economic impacts of this proposed rule on small entities as defined by SBREFA is difficult since it is not known how many petitions would be submitted or how they would propose to change management requirements for inventoried roadless areas. The agency is seeking comment on this determination. Comments can be submitted as provided in the **ADDRESSES** section of this preamble. This proposed rule would not impose record keeping requirements; would not affect small entities' competitive position in relation to large entities; and would not affect small entities' cash flow, liquidity, or ability to remain in the market.

A cost-benefit analysis has been prepared for this proposed rule that incorporates by reference the November 2000 detailed regulatory impact analysis prepared for the roadless rule promulgated in January of 2001. A quantitative analysis of costs and benefits associated with this proposed rule is not feasible, however, because there is no experience with implementing the roadless rule, and thus there are no data available. In addition, many of the effects of this proposed rule are not readily quantifiable in financial terms because they would be based on future State-specific rulemaking. For these reasons, the cost-benefit analysis prepared for this proposed rule focuses on the qualitative aspects of implementing a State petition process. Detailed quantitative analysis would be conducted in the future if and when any State-specific rulemaking proposals are made.

The range of potential costs and benefits of this proposed rule has been estimated by comparing selected effects if 58.5 million acres of inventoried roadless areas are managed following the prohibitions for road construction and timber management activities in the 2001 roadless rule, or if these same areas are managed in accordance with the existing management requirements contained in land management plans. Approximately 25 percent of the total acres of inventoried roadless areas are in the State of Alaska. About 72 percent of the total is in 11 Western States of Montana, Idaho, Wyoming, Washington, Utah, Oregon, New Mexico, Nevada, Colorado, California, and Arizona. The remaining 3 percent is scattered among the remaining 27 States. While it is currently unknown which States may choose to submit a petition for State-specific rulemaking, the Forest Service assumes that all 39 States will do so in the first year after the rule is final. The costs to the Forest Service and the Department to evaluate and make a decision on a petition are estimated to range from $75,000 to $150,000. Costs could range from $25,000 to $100,000 for an individual State submitting a petition. Total costs to the States for 39 petitions would range from $975,000 to $3,900,000, therefore; and total costs to the Government would range from $2,925,000 to $5,850,000. Total costs of the rule are therefore estimated to range from $3,900,000 to $9,750,000.

While the effects of implementing this proposed rule are speculative due to the programmatic nature of establishing a petitioning process, they are expected to be within the existing parameters of the effects of implementing the provisions of the 2001 roadless rule or of implementing existing land management plans. This proposed rule is expected to provide a variety of potential beneficial effects, which include the conservation of roadless areas; the protection of human health and safety; the reduction of hazardous fuels and restoration of essential wildlife habitats; the assurance of reasonable access to public and private property or facilities; and the improvement of collaboration and partnerships with States.

Environmental Impact

The Department prepared a draft environmental impact statement (EIS) (May 2000) and a Final EIS (November 2000) in association with promulgation of the 2001 roadless rule. The DEIS and FEIS examined in detail the no action alternative in which no rule prohibiting activities in inventoried roadless areas would be issued, and management of inventoried roadless areas would be governed by existing forest plans. The environmental impacts of revising 36 CFR part 294 are essentially those disclosed and discussed for the no action alternative displayed in FEIS. The FEIS is available in the document archives section of the Roadless Area Conservation World Wide Wed/Internet site at *http://www.roadless.fs.fed.us*.

This proposed rule would establish administrative procedures to allow a Governor to petition the Secretary of Agriculture to undertake future rulemaking for the management of inventoried roadless areas within a specific State. Thus, subsequent State-specific roadless area rulemaking may be proposed in the future, at which time the agency would fully consider the environmental effects of that rulemaking in compliance with National Environmental Policy Act (NEPA) procedures. This proposed rule is merely procedural in nature and scope and, as such, has no direct, indirect, or cumulative effect on the environment. Section 31.1b of Forest Service Handbook 1909.15 (57 FR 43168; September 18, 1992) excludes from documentation in an environmental assessment or impact statement ''rules, regulations, or policies to establish Service-wide administrative procedures, program processes, or instruction.'' The agency's assessment is that this rule falls within this category of actions and that no extraordinary circumstances exist which would require preparation of an environmental assessment or an environmental impact statement.

No Takings Implications

This proposed rule has been analyzed in accordance with the principles and criteria contained in Executive Order 12360, and it has been determined that the proposed rule would not pose the risk of a taking of private property, as the proposed rule is limited to the establishment of administrative procedures.

Energy Effects

This proposed rule has been analyzed under Executive Order 13211, Actions Concerning Regulations That Significantly Affect Energy Supply, Distribution, or Use. It has been determined that this proposed rule does not constitute a significant energy action as defined in the Executive order.

Civil Justice Reform

This proposed rule has been reviewed under Executive Order 12988, Civil Justice Reform. After adoption of this proposed rule as a final rule, (1) all State and local laws and regulations that conflict with this rule or that would impede full implementation of this rule would be preempted; (2) no retroactive effect would be given to this rule; and (3) this rule would not require the use of administrative proceedings before parties could file suit in court challenging its provisions.

Unfunded Mandates

Pursuant to Title II of the Unfunded Mandates Reform Act of 1995 (2 U.S.C. 1531–1538), which the President signed into law on March 22, 1995, the Department has assessed the effects of this proposed rule on State, local, and tribal governments and the private sector. This proposed rule does not compel the expenditure of $100 million or more by any State, local, or tribal government, or anyone in the private

sector. Therefore, a statement under section 202 of the act is not required.

Federalism

The agency has considered this proposed rule under the requirements of Executive Order 13132, Federalism. The agency has made a preliminary assessment that the rule conforms with the federalism principles set out in this Executive order; would not impose any significant compliance costs on the States; and would not have substantial direct effects on the States, on the relationship between the national government and the States, or on the distribution of power and responsibilities among the various levels of government. Based on comments received on this proposed rule, the agency will consider if any additional consultation will be needed with State and local governments prior to adopting a final rule.

Consultation and Coordination With Indian Tribal Governments

This proposed rule does not have tribal implications as defined by Executive Order 13175, Consultation and Coordination with Indian Tribal Governments. Therefore, advance consultation with tribes is not required.

Controlling Paperwork Burdens on the Public

In accordance with the Paperwork Reduction Act of 1995 (44 U.S.C. 3501, *et seq.*) and implementing regulations at 5 CFR part 1320, Controlling Paperwork Burden on the Public, § 294.13 and § 294.14 of this proposed rule contain information collection requirements and, therefore, require approval by the Office of Management and Budget (OMB). Proposed § 294.13 describes the administrative process that Governors must follow to petition the Secretary for rulemaking to govern inventoried roadless areas with their States. Proposed § 294.14 sets out what must be included in a petition submitted to the Secretary requesting State-specific rulemaking.

Estimate of burden: If a State decides to submit a petition, the management requirements for each inventoried roadless area within the State must be reviewed and evaluated on area-specific unique situations, or circumstances. The State petition will have to be accompanied by the appropriate level of detailed information and rationale to allow the Department to evaluate the recommended management requirements and make a disposition on the petition. Although the Secretary's response and any subsequent rulemakings will be developed in collaboration with the State, a State's petition represents solely the views of the petitioner and do not prejudge or reflect the views of the Forest Service or Secretary. Information provided by or obtained from outside parties which USDA subsequently adopts, endorses, or uses to formulate or support a regulation will be publicly available.

The agency estimates that the burden for an individual State could be as high as 1,000 hours for a single petition, depending on the quantity of inventoried roadless areas within the State and the extent of adjustment to inventoried roadless area management recommended in an individual petition.

Respondents: State Governors.

Estimated annual number of respondents: There are 39 States with inventoried roadless areas on National Forest System lands within their boundaries that would be eligible to submit petitions to the Secretary under this rule. The agency anticipates that all petitions would be submitted during the first year this rule is in effect.

Estimated annual number of responses per respondent: One per State.

Estimated annual number of responses: The maximum number of responses from States that could be received in a given year would be 39.

Estimated total annual burden on respondents: The estimated total burden for 39 respondents is 39,000 hours.

Accordingly, the agency seeks comments on:

(1) Whether this collection of information is necessary for the stated purposes and the proper performance of the functions of the agency, including whether the information will have practical or scientific utility;

(2) The accuracy of the agency's estimate of the burden of the collection of information, including the validity of the methodology and assumptions used;

(3) Ways to enhance the quality, utility, and clarity of the information to be collected; and

(4) Ways to minimize the burden of the collection of information on respondents, including the use of automated, electronic, mechanical, or other technological collection techniques or other forms of information technology.

Comments can be submitted as provided in the **ADDRESSES** section of this preamble. In submitting the request for approval of this information collection to OMB, the agency will summarize and address comments received on the information collection component of this proposed rule.

Government Paperwork Elimination Act Compliance

The Forest Service is committed to compliance with the Government Paperwork Elimination Act (44 U.S.C. 3504), which requires Government agencies to provide the public the option of submitting information or transacting business electronically to the maximum extent possible.

List of Subjects in 36 CFR Part 294

National Forests, Navigation (air), Recreation and recreation areas, Wilderness areas, Recordkeeping and reporting requirements.

Therefore, for the reasons set forth in the preamble, the Forest Service proposes to revise part 294 of title 36 of the Code of Federal Regulations to read as follows:

PART 294—SPECIAL AREAS

Subpart B—State Petitions for Inventoried Roadless Area Management

Sec.
294.10 Purpose.
294.11 Definition.
294.12 State petitions.
294.13 Petition process.
294.14 Petition contents.
294.15 State-specific rulemaking.
294.16 Scope and applicability.

Authority: 16 U.S.C. 472, 529, 551, 1608, 1613; 23 U.S.C. 201, 205.

§ 294.10 Purpose.

The purpose of these administrative procedures is to set forth a process for State-specific rulemaking to address the management of inventoried roadless areas in areas where the Secretary determines that regulatory direction is appropriate based on a petition from the affected Governor.

§ 294.11 Definition.

Inventoried roadless areas—Areas identified in a set of inventoried roadless area maps, contained in the Forest Service Roadless Area Conservation, Final Environmental Impact Statement, Volume 2, dated November 2000, which are held at the National headquarters office of the Forest Service, and any subsequent update or revision of those maps.

§ 294.12 State petitions.

The Governor of any State that contains National Forest System lands may petition the Secretary of Agriculture to promulgate regulations establishing management requirements for all or any portion of National Forest System inventoried roadless areas within that State. Any such petition

must be submitted to the Secretary of Agriculture not later than [date to be inserted 18 months from the effective date of the final rule].

§ 294.13 Petition process.

(a) Review and consideration of petitions made pursuant to § 294.12 shall be accomplished as follows:

(1) Review—The Secretary shall review petitions and may request additional information from a petitioner before deciding whether to accept the petition. If the Secretary requests additional information from a petitioner, the petition will be considered complete when the petitioner provides the additional information.

(2) Disposition—The Secretary or the Secretary's designee shall respond to the petition within 180 days of receipt of a completed petition. The response shall accept or decline the petition to initiate a State-specific rulemaking.

§ 294.14 Petition contents.

(a) Any petition made pursuant to § 294.12 shall provide the following:

(1) The location and description of the particular lands for which the petition is being made, including maps and other appropriate resources in sufficient detail to enable consideration of the petition;

(2) The particular management requirements recommended for the lands and any exceptions;

(3) The identification of the circumstances and needs intended to be addressed by the petition, including conserving roadless area values and characteristics; protecting human health and safety; reducing hazardous fuels and restoring essential wildlife habitats; maintaining existing facilities such as dams, or providing reasonable access to public and private property or public and privately owned facilities; and technical corrections to existing maps such as boundary adjustments to remove existing roaded areas;

(4) A description of how the recommended management requirements identified in accordance with paragraph (a)(2) of this section differs from existing applicable land management plan(s) or policies related to inventoried roadless area management, while still complying with applicable laws and regulations;

(5) A description of how the recommended management requirements identified in accordance with paragraph (a)(2) of this section compares to existing State land conservation policies and direction set forth in any applicable State land and resource management plan(s);

(6) A description of how the recommended management requirements identified in accordance with paragraph (a)(2) of this section would affect the fish and wildlife that utilize the particular lands in question and their habitat;

(7) A description of any public involvement efforts undertaken by the State during development of the petition, including efforts to engage local governments and persons with expertise in fish and wildlife biology, fish and wildlife management, forest management, outdoor recreation, and other important disciplines; and

(8) A commitment by the State that it will participate as a cooperating agency in any environmental analysis for a rulemaking process.

§ 294.15 State-specific rulemaking.

If the Secretary or the Secretary's designee accepts a petition, the Forest Service shall be directed to initiate notice and comment rulemaking to address the petition. The Forest Service shall coordinate development of the proposed rule with the State. The Secretary or the Secretary's designee shall make the final decision for any State-specific inventoried roadless area management rule.

§ 294.16 Scope and applicability.

(a) The provisions of this regulation apply exclusively to the development and review of petitions made pursuant to this subpart.

(b) Nothing in this regulation shall be construed to provide for the transfer to, or administration by, a State or local authority of any Federally owned lands.

Dated: July 12, 2004.

Dale N. Bosworth,

Chief.

[FR Doc. 04–16191 Filed 7–15–04; 8:45 am]

BILLING CODE 3410–11–P

ENVIRONMENTAL PROTECTION AGENCY

40 CFR Part 62

[Region II Docket No. R02–OAR–2004–NJ–0003, FRL–7788–4]

Approval and Promulgation of State Plans for Designated Facilities; New Jersey

AGENCY: Environmental Protection Agency.

ACTION: Proposed rule.

SUMMARY: The Environmental Protection Agency (EPA) proposes to approve a negative declaration submitted by the State of New Jersey. The negative declaration fulfills EPA's promulgated Emission Guidelines for existing commercial and industrial solid waste incinerator (CISWI) sources. In accordance with the Emission Guidelines, States are not required to submit a plan to implement and enforce the Emission Guidelines if there are no existing CISWI sources in the State and if it submits a negative declaration letter in place of the State Plan.

DATES: Comments must be received on or before August 16, 2004.

ADDRESSES: Submit your comments, identified by Regional Material in EDocket (RME) ID Number R02–OAR–2004–NJ–0003 by one of the following methods:

A. Federal eRulemaking Portal: *http://www.regulations.gov.* Follow the on-line instructions for submitting comments.

B. Agency Web site: *http://docket.epa.gov/rmepub/* Regional Material in EDocket (RME), EPA's electronic public docket and comment system, is EPA's preferred method for receiving comments. Once in the system, select ''quick search,'' then key in the appropriate RME Docket identification number. Follow the on-line instructions for submitting comments.

C. E-mail: *Werner.Raymond@epa.gov*

D. Fax: (212) 637–3901.

E. Mail: ''RME ID Number R02–OAR–2004–NJ–0003'', Raymond Werner, Chief, Air Programs Branch, Environmental Protection Agency, Region 2 Office, 290 Broadway, 25th Floor, New York, New York 10007–1866.

F. Hand Delivery or Courier. Deliver your comments to: Raymond Werner, Chief, Air Programs Branch, Environmental Protection Agency, Region 2 Office, 290 Broadway, 25th Floor, New York, New York 10007–1866. Such deliveries are only accepted during the Regional Office's normal hours of operation. The Regional Office's official hours of business are Monday through Friday, 8:30 to 4:30 excluding Federal holidays.

Instructions: Direct your comments to Regional Material in EDocket (RME) ID Number R02–OAR–2004–NJ–0003. EPA's policy is that all comments received will be included in the public docket without change and may be made available online at *http://docket.epa.gov/rmepub/,* including any personal information provided, unless the comment includes information claimed to be Confidential Business Information (CBI) or other information whose disclosure is restricted by statute. Do not submit information that you

consider to be CBI or otherwise protected through Regional Material in EDocket (RME), regulations.gov, or e-mail. The EPA RME Web site and the Federal regulations.gov Web site are ''anonymous access'' systems, which means EPA will not know your identity or contact information unless you provide it in the body of your comment. If you send an e-mail comment directly to EPA without going through RME or regulations.gov, your e-mail address will be automatically captured and included as part of the comment that is placed in the public docket and made available on the Internet. If you submit an electronic comment, EPA recommends that you include your name and other contact information in the body of your comment and with any disk or CD–ROM you submit. If EPA cannot read your comment due to technical difficulties and cannot contact you for clarification, EPA may not be able to consider your comment. Electronic files should avoid the use of special characters, any form of encryption, and be free of any defects or viruses.

Docket: All documents in the electronic docket are listed in the Regional Material in EDocket (RME) index at *http://docket.epa.gov/rmepub/*. Although listed in the index, some information is not publicly available, *i.e.*, CBI or other information whose disclosure is restricted by statute. Certain other material, such as copyrighted material, is not placed on the Internet and will be publicly available only in hard copy form. Publicly available docket materials are available either electronically in RME or in hard copy at the Air Programs Branch, Environmental Protection Agency, Region 2 Office, 290 Broadway, 25th Floor, New York, New York 10007–1866. EPA requests that if at all possible, you contact the contact listed in the **FOR FURTHER INFORMATION CONTACT** section to schedule your inspection. The Regional Office's official hours of business are Monday through Friday, 8:30 to 4:30 excluding Federal holidays.

FOR FURTHER INFORMATION CONTACT: Anthony (Ted) Gardella (*Gardella.Anthony@epa.gov*), Air Programs Branch, Environmental Protection Agency, 290 Broadway, 25th Floor, New York, New York 10007–1866, (212) 637–3892.

SUPPLEMENTARY INFORMATION: The following table of contents describes the format for the **SUPPLEMENTARY INFORMATION** section:

Table of Contents

A. What Action Is EPA Proposing Today?
B. Why Is EPA Proposing To Approve New Jersey's Negative Declaration?
C. What If an Existing CISWI Source Is Discovered After EPA Takes Final Action on New Jersey's Negative Declaration?
D. What Is the Background for Emission Guidelines and State Plans?
E. Where Can You Find the Emission Guidelines Requirements for CISWI Sources?
F. Who Must Comply With the Emission Guidelines Requirements?
G. What Are EPA's Conclusions?
H. Statutory and Executive Order Revisions.

A. What Action Is EPA Proposing Today?

The EPA is proposing to approve a negative declaration submitted by the State of New Jersey dated March 4, 2004. This negative declaration finds that there are no existing facilities subject to regulation as commercial and industrial solid waste incinerators (CISWI) in the State of New Jersey. The negative declaration satisfies the federal Emission Guidelines requirements of EPA's promulgated regulation entitled ''Standards of Performance for New Stationary Sources and Emission Guidelines for Existing Sources: Commercial and Industrial Solid Waste Incineration Units'' (65 FR 75338, December 1, 2000; and corrected at 66 FR 16605, March 27, 2001). The negative declaration officially certifies to EPA that, to the best of the State's knowledge, there are no CISWI sources in operation in the State of New Jersey.

In its March 4, 2004, letter, New Jersey further stated that its negative declaration was consistent with the EPA's database of CISWI units which shows only one potential CISWI incinerator located at the Hoffman LaRoche (HLR) facility in Nutley, New Jersey. However, New Jersey stated that the HLR incinerator is regulated as a co-fired combustor under EPA's Hospital/Medical/Infectious Waste Incinerator (HMIWI) Federal Plan (title 40, part 62, subpart HHH of the Code of Federal Regulations (40 CFR part 62, subpart HHH), promulgated on August 15, 2000) and therefore, exempt from the CISWI Emission Guidelines. As further detailed in section B below (''Why is EPA Proposing To Approve New Jersey's Negative Declaration?''), EPA agrees with New Jersey that the HLR incinerator is considered a co-fired combustor under EPA's HMIWI Federal Plan and, due to the nature of the waste combusted in the incinerator, is exempt from the CISWI Emission Guidelines.

B. Why Is EPA Proposing To Approve New Jersey's Negative Declaration?

EPA has evaluated the negative declaration submitted by New Jersey for consistency with the Clean Air Act (Act), EPA guidelines and policy. EPA has determined that New Jersey's negative declaration meets all applicable requirements and, therefore, EPA is approving the State's certification that there are no existing CISWI units in operation throughout the State.

EPA's approval of New Jersey's negative declaration is based on the following:

(1) New Jersey has met the requirements of § 60.23(b) in 40 CFR part 60, subpart B for submittal of a letter of negative declaration that certifies there are no existing facilities in the State. Such certification exempts the State from the requirements to submit a plan.

(2) Although EPA's November 2000 source inventory indicated there was one existing CISWI unit operating in the State of New Jersey at the HLR facility, the owner, in a letter dated June 14, 2004, notified EPA that its incinerator is exempt from the CISWI Federal Plan and CISWI Emission Guidelines. In its June 2004 notification letter, HLR stated that its incinerator combusts waste consisting of more than ninety percent pathological and low level radioactive waste and is therefore, in accordance with § 62.14525 of the CISWI Federal Plan and 40 CFR part 60, subpart DDDD (CISWI Emission Guidelines), exempt from CISWI requirements, except for recordkeeping requirements. EPA has reviewed HLR's Exemption Notification and agrees with the owner's exemption request. A copy of HLR's June 14, 2004, Exemption Notification letter and EPA's correspondence with the owner is available, upon request, from the EPA Regional Office listed in the **ADDRESSES** section of this document or it can be viewed at *http://docket.eps.gov/rmepub/*.

It should be noted that since HLR's incinerator also conforms to the definition of a co-fired combustor under the HMIWI Federal Plan, the owner is only required to maintain records as to the type and quantity of waste combusted. Under the HMIWI Federal Plan, a co-fired combustor is considered an incinerator that combusts waste solids consisting of ten percent or less HMIWI waste.

C. What If an Existing CISWI Source Is Discovered After EPA Takes Final Action on New Jersey's Negative Declaration?

Section 60.2530 of 40 CFR part 60, subpart DDDD (page 75363 at 65 FR 75338, December 1, 2001) requires that if, after the effective date of EPA's final action on New Jersey's negative

declaration, an existing CISWI unit is found in the State, the Federal Plan (40 CFR part 62, subpart III, promulgated on October 3, 2003) implementing the Emission Guidelines would automatically apply to that CISWI unit until a State Plan is approved by EPA.

D. What Is the Background for Emission Guidelines and State Plans?

Section 111(d) of the Act requires that pollutants controlled under New Source Performance Standards (NSPS) must also be controlled at existing sources in the same source category. Once an NSPS is issued, EPA then publishes an Emission Guidelines applicable to the control of the same pollutant from existing (designated) facilities. States with designated facilities must then develop State Plans to adopt the Emission Guidelines into their body of regulations.

Under section 129 of the Act, the Emission Guidelines is not federally enforceable. Section 129(b)(2) of the Act requires states to submit State Plans to EPA for approval. State Plans must be at least as protective as the Emission Guidelines, and they become federally enforceable upon EPA approval. The procedures for adopting and submitting State Plans, as well as state requirements for a negative declaration, are in 40 CFR part 60, subpart B.

EPA originally issued the subpart B provisions on November 17, 1975. EPA amended subpart B on December 19, 1995, to allow the subparts developed under section 129 to include specifications that supersede the general provisions in subpart B regarding the schedule for submittal of State Plans, the stringency of the emission limitations, and the stringency of compliance schedules (60 FR 65414).

E. Where Can You Find the Emission Guidelines Requirements for CISWI Sources?

On December 1, 2000, under sections 111 and 129 of the Act, EPA issued the NSPS applicable to new CISWI sources and the Emission Guidelines applicable to existing CISWI sources. The NSPS and Emission Guidelines are codified at 40 CFR part 60, subparts CCCC and DDDD (65 FR 75337), respectively.

F. Who Must Comply With the Emission Guidelines Requirements?

If you own or operate a combustion device that combusts commercial and industrial waste and you (1) began construction of your CISWI unit on or before November 30, 1999, or (2) began reconstruction or modification of your CISWI unit prior to June 1, 2001, you must comply with these requirements. *See* § 60.2555 of 40 CFR part 60, subpart DDDD for a list of incinerator source categories that are exempt from the Federal requirements for CISWIs.

G. What Are EPA's Conclusions?

EPA has determined that New Jersey's negative declaration meets all applicable requirements and, therefore, EPA is approving New Jersey's certification that no CISWI units are in operation within the State of New Jersey. If any existing CISWI sources are discovered in the future, the Federal Plan implementing the Emission Guidelines would automatically apply to that CISWI unit until the State Plan is approved by EPA.

H. Statutory and Executive Order Revisions

Executive Order 12866, Regulatory Planning and Review

The Office of Management and Budget (OMB) has exempted this regulatory action from Executive Order 12866, entitled ''Regulatory Planning and Review.''

Paperwork Reduction Act

Under the Paperwork Reduction Act, 44 U.S.C. 3501 *et seq.*, OMB must approve all ''collections of information'' by EPA. The Act defines ''collection of information'' as a requirement for ''answers to * * * identical reporting or recordkeeping requirements imposed on ten or more persons * * * '' 44 U.S.C. 3502(3)(A). Because the proposed rule applies to New Jersey's negative declaration letter for CISWI units, there are no companies affected by this proposal and therefore, the Paper Reduction Act does not apply.

Regulatory Flexibility Act

The Regulatory Flexibility Act (RFA) generally requires an agency to conduct a regulatory flexibility analysis of any rule subject to notice and comment rulemaking requirements unless the agency certifies that the rule will not have a significant economic impact on a substantial number of small entities. Small entities include small businesses, small not-for-profit enterprises, and small governmental jurisdictions.

This rule will not have a significant impact on a substantial number of small entities because as a negative declaration no sources in the state are subject to the CISWI Emission Guidelines requirements. Therefore, because the Federal proposed approval does not create any new requirements, I certify that this action will not have a significant economic impact on a substantial number of small entities.

Unfunded Mandates Reform Act

Under sections 202 of the Unfunded Mandates Reform Act of 1995 (''Unfunded Mandates Act''), signed into law on March 22, 1995, EPA must prepare a budgetary impact statement to accompany any proposed or final rule that includes a Federal mandate that may result in estimated costs to State, local, or tribal governments in the aggregate; or to the private sector, of $100 million or more. Under section 205, EPA must select the most cost-effective and least burdensome alternative that achieves the objectives of the rule and is consistent with statutory requirements. Section 203 requires EPA to establish a plan for informing and advising any small governments that may be significantly or uniquely impacted by the rule.

EPA has determined that the approval action proposed does not include a Federal mandate that may result in estimated costs of $100 million or more to either State, local, or tribal governments in the aggregate, or to the private sector. This Federal action proposes to approve pre-existing requirements under State or local law, and imposes no new requirements. Accordingly, no additional costs to State, local, or tribal governments, or to the private sector, result from this action.

Executive Order 13132, Federalism

Federalism (64 FR 43255, August 10, 1999) revokes and replaces Executive Orders 12612 (Federalism) and 12875 (Enhancing the Intergovernmental Partnership). Executive Order 13132 requires EPA to develop an accountable process to ensure ''meaningful and timely input by State and local officials in the development of regulatory policies that have federalism implications.'' ''Policies that have federalism implications'' is defined in the Executive Order to include regulations that have ''substantial direct effects on the states, on the relationship between the national government and the states, or on the distribution of power and responsibilities among the various levels of government.'' Under Executive Order 13132, EPA may not issue a regulation that has federalism implications, that imposes substantial direct compliance costs, and that is not required by statute, unless the Federal government provides the funds necessary to pay the direct compliance costs incurred by State and local governments, or EPA consults with State and local officials early in the process of developing the proposed regulation. EPA also may not issue a

regulation that has federalism implications and that preempts State law unless the Agency consults with State and local officials early in the process of developing the proposed regulation.

EPA has concluded that this rule may have federalism implications. The only reason why this rule may have federalism implications is if in the future a CISWI unit is found within the State of New Jersey the unit will become subject to the Federal Plan until a State Plan is approved by EPA. However, it will not impose substantial direct compliance costs on State or local governments, nor will it preempt State law. Thus, the requirements of sections 6(b) and 6(c) of the Executive Order do not apply to this rule.

Executive Order 13175, Coordination With Indian Tribal Governments

Executive Order 13175, entitled ''Consultation and Coordination with Indian Tribal Governments'' (65 FR 67249, November 9, 2000), requires EPA to develop an accountable process to ensure ''meaningful and timely input by tribal officials in the development of regulatory policies that have tribal implications.'' This proposed rule does not have tribal implications, as specified in Executive Order 13175. It will not have substantial direct effects on tribal governments, on the relationship between the Federal government and Indian tribes, or on the distribution of power and responsibilities between the Federal government and Indian tribes. Thus, Executive Order 13175 does not apply to this rule.

EPA specifically solicits additional comment on this proposed rule from tribal officials.

Executive Order 13045, Protection of Children From Environmental Health Risks and Safety Risks

Protection of Children from Environmental Health Risks and Safety Risks (62 FR 19885, April 23, 1997), applies to any rule that: (1) Is determined to be ''economically significant'' as defined under Executive Order 12866, and (2) concerns an environmental health or safety risk that EPA has reason to believe may have a disproportionate effect on children. If the regulatory action meets both criteria, the Agency must evaluate the environmental health or safety effects of the planned rule on children, and explain why the planned regulation is preferable to other potentially effective and reasonably feasible alternatives considered by the Agency.

This rule is not subject to Executive Order 13045 because it does not involve decisions intended to mitigate environmental health or safety risks.

Executive Order 13211, Actions That Significantly Affect Energy Supply, Distribution, or Use

This rule is not subject to Executive Order 13211, ''Actions Concerning Regulations That Significantly Affect Energy Supply, Distribution, or Use'' (66 FR 28355, May 22, 2001) because it is not a significant regulatory action under Executive Order 12866.

National Technology Transfer and Advancement Act

Section 12 of the National Technology Transfer and Advancement Act (NTTAA) of 1995 requires Federal agencies to evaluate existing technical standards when developing a new regulation. To comply with NTTAA, EPA must consider and use ''voluntary consensus standards'' (VCS) if available and applicable when developing programs and policies unless doing so would be inconsistent with applicable law or otherwise impractical.

The EPA believes that VCS are inapplicable to this action. Today's action does not require the public to perform activities conducive to the use of VCS.

List of Subjects in 40 CFR Part 62

Environmental protection, Air pollution control, Intergovernmental relations, Reporting and recordkeeping requirements.

Dated: July 8, 2004.

Walter Mugdan,

Acting Regional Administrator, Region 2.

[FR Doc. 04–16208 Filed 7–15–04; 8:45 am]

BILLING CODE 6560–50–P

ENVIRONMENTAL PROTECTION AGENCY

40 CFR Parts 239 and 257

[FRL–7787–4]

Adequacy of Indiana Solid Waste Landfill Permit Programs Under RCRA Subtitle D

AGENCY: Environmental Protection Agency (EPA).

ACTION: Proposed rule.

SUMMARY: This document proposes to approve Indiana's solid waste regulation, which ensures that hazardous waste from conditionally exempt small quantity generators (CESQGs) will be disposed of only in accordance with EPA regulations. In the ''Rules and Regulations'' section of this **Federal Register**, EPA is approving Indiana's regulations by a direct final rule. EPA did not make a proposal prior to the direct final rule because we believe this action is not controversial and do not expect comments that oppose it. We have explained the reasons for this approval in the preamble to the direct final rule. Unless we receive written comments that oppose this approval during the comment period, the direct final rule will become effective on the date it establishes, and we will not take further action on this proposal. If we receive comments that oppose this action, we will withdraw the direct final rule, and it will not take effect. We will then respond to public comments in a later final rule based on this proposal. You will not have another opportunity for comment. If you want to comment on this action, you must do so at this time.

DATES: Send your written comments by August 16, 2004.

ADDRESSES: Written comments should be sent to Susan Mooney, Waste Management Branch (Mail code: DW–8J), U.S. EPA Region 5, 77 West Jackson Boulevard, Chicago, IL 60604, telephone: 312/886–3585. Comments may also be submitted electronically to: *mooney.susan@epa.gov* or by facsimile at (312) 353–4788. You may examine copies of the relevant portions of Indiana's regulations during normal business hours at EPA Region 5.

FOR FURTHER INFORMATION CONTACT: Susan Mooney, Waste Management Branch (Mail code: DW–8J), U.S. EPA Region 5, 77 West Jackson Boulevard, Chicago, IL 60604, telephone: (312) 886–3585, e-mail: *mooney.susan@epa.gov.*

SUPPLEMENTARY INFORMATION: For additional information, please see the Direct Final Rule published in the ''Rules and Regulations'' section of today's **Federal Register**.

Dated: June 16, 2004.

Bharat Mathur,

Acting Regional Administrator, US EPA, Region 5.

[FR Doc. 04–16205 Filed 7–15–04; 8:45 am]

BILLING CODE 6560–50–P

Notices

Federal Register
Vol. 69, No. 136
Friday, July 16, 2004

This section of the FEDERAL REGISTER contains documents other than rules or proposed rules that are applicable to the public. Notices of hearings and investigations, committee meetings, agency decisions and rulings, delegations of authority, filing of petitions and applications and agency statements of organization and functions are examples of documents appearing in this section.

DEPARTMENT OF AGRICULTURE

Animal and Plant Health Inspection Service

[Docket No. 04–066–1]

Notice of Request for Extension of Approval of an Information Collection

AGENCY: Animal and Plant Health Inspection Service, USDA.

ACTION: Extension of approval of an information collection; comment request.

SUMMARY: In accordance with the Paperwork Reduction Act of 1995, this notice announces the Animal and Plant Health Inspection Service's intention to request an extension of approval of an information collection in support of regulations for the interstate movement of horses that have tested positive for equine infectious anemia.

DATES: We will consider all comments that we receive on or before September 14, 2004.

ADDRESSES: You may submit comments by any of the following methods:

- *Postal Mail/Commercial Delivery:* Please send four copies of your comment (an original and three copies) to Docket No. 04–066–1, Regulatory Analysis and Development, PPD, APHIS, Station 3C71, 4700 River Road Unit 118, Riverdale, MD 20737–1238. Please state that your comment refers to Docket No. 04–066–1.
- *E-mail:* Address your comment to *regulations@aphis.usda.gov*. Your comment must be contained in the body of your message; do not send attached files. Please include your name and address in your message and ''Docket No. 04–066–1'' on the subject line.
- *Agency Web site:* Go to *http://www.aphis.usda.gov/ppd/rad/cominst.html* for a form you can use to submit an e-mail comment through the APHIS Web site.

Reading Room: You may read any comments that we receive on this docket in our reading room. The reading room is located in room 1141 of the USDA South Building, 14th Street and Independence Avenue SW., Washington, DC. Normal reading room hours are 8 a.m. to 4:30 p.m., Monday through Friday, except holidays. To be sure someone is there to help you, please call (202) 690–2817 before coming.

Other Information: You may view APHIS documents published in the **Federal Register** and related information, including the names of groups and individuals who have commented on APHIS dockets, on the Internet at *http://www.aphis.usda.gov/ppd/rad/webrepor.html*.

FOR FURTHER INFORMATION CONTACT: For information regarding the interstate movement of equine that have tested positive for equine infectious anemia, contact Dr. Tim Cordes, Senior Staff Veterinarian, Certification and Control Team, NCAHP, VS, APHIS, 4700 River Road Unit 46, Riverdale, MD 20737; (301) 734–3279. For copies of more detailed information on the information collection, contact Mrs. Celeste Sickles, APHIS' Information Collection Coordinator, at (301) 734–7477.

SUPPLEMENTARY INFORMATION:

Title: Communicable Diseases in Horses.

OMB Number: 0579–0127.

Type of Request: Extension of approval of an information collection.

Abstract: The Animal and Plant Health Inspection Service (APHIS) of the U.S. Department of Agriculture regulates the importation and interstate movement of animals and animal products, and conducts various other activities to protect the health of our Nation's livestock and poultry.

Equine infectious anemia (EIA) is an infectious and potentially fatal viral disease of equines. There is no vaccine or treatment for the disease. It is often difficult to differentiate from other fever-producing diseases, including anthrax, influenza, and equine encephalitis.

The regulations in 9 CFR 75.4 govern the interstate movement of equines that have tested positive to an official test for EIA (EIA reactors) and provide for the approval of laboratories, diagnostic facilities, and research facilities. The regulations require the use of an official EIA test, a certificate for the interstate movement of an EIA reactor, and proper identification of the reactor, as well as recordkeeping by accredited and State veterinarians; laboratory, diagnostic, and research facility personnel; and stockyard personnel.

We are asking the Office of Management and Budget (OMB) to approve our use of these information collection activities for an additional 3 years.

The purpose of this notice is to solicit comments from the public (as well as affected agencies) concerning this information collection activity. These comments will help us:

(1) Evaluate whether the information collection is necessary for the proper performance of our agency's functions, including whether the information will have practical utility;

(2) Evaluate the accuracy of our estimate of the burden of the information collection, including the validity of the methodology and assumptions used;

(3) Enhance the quality, utility, and clarity of the information to be collected; and

(4) Minimize the burden of the collection of information on those who are to respond, through use, as appropriate, of automated, electronic, mechanical, and other collection technologies, *e.g.*, permitting electronic submission of responses.

Estimate of burden: The public reporting burden for this collection of information is estimated to average 0.1016625 hours per response.

Respondents: Accredited and State veterinarians; laboratory, diagnostic, and research facility personnel; stockyard personnel; and owners and shippers of horses.

Estimated annual number of respondents: 10,000.

Estimated annual number of responses per respondent: 200.

Estimated annual number of responses: 2,000,000.

Estimated total annual burden on respondents: 203,325 hours. (Due to averaging, the total annual burden hours may not equal the product of the annual number of responses multiplied by the reporting burden per response.)

All responses to this notice will be summarized and included in the request for OMB approval. All comments will also become a matter of public record.

Done in Washington, DC, this 12th day of July 2004.

Kevin Shea,

Acting Administrator, Animal and Plant Health Inspection Service.

[FR Doc. 04–16182 Filed 7–15–04; 8:45 am]

BILLING CODE 3410–34–P

DEPARTMENT OF AGRICULTURE

Animal and Plant Health Inspection Service

[Docket No. 04–069–1]

Secretary's Advisory Committee on Foreign Animal and Poultry Diseases; Meeting

AGENCY: Animal and Plant Health Inspection Service, USDA.

ACTION: Notice of meeting.

SUMMARY: Pursuant to the Federal Advisory Committee Act (5 U.S.C. App. II), we are giving notice of a meeting of the Secretary's Advisory Committee on Foreign Animal and Poultry Diseases.

DATES: The meeting will be held on August 4 and 5, 2004, from 8 a.m. to 5 p.m.

ADDRESSES: The meeting will be held in the Conference Center at the USDA Center at Riverside, 4700 River Road, Riverdale, MD.

Written statements on the meeting topic may be sent to Dr. Joseph Annelli, Director Outreach/Liaison, Emergency Management, APHIS, 4700 River Road Unit 41, Riverdale, MD 20737–1231.

FOR FURTHER INFORMATION CONTACT: Dr. Joseph Annelli, Director Outreach/Liaison, Emergency Management, APHIS, 4700 River Road Unit 41, Riverdale, MD 20737–1231; (301) 734–8073.

SUPPLEMENTARY INFORMATION: The Secretary's Advisory Committee on Foreign Animal and Poultry Diseases (the Committee) advises the Secretary of Agriculture on actions necessary to prevent the introduction of foreign diseases of livestock and poultry into the United States. In addition, the Committee advises the Secretary on contingency planning and on maintaining a state of preparedness to deal with these diseases, if introduced.

The Committee will meet in Riverdale, MD, on August 4–5, 2004, to discuss issues related to bovine spongiform encephalopathy (BSE) and the national animal identification system.

The meeting will be open to the public, and any member of the public may file a written statement. However, due to the time constraints, only Committee members will be allowed to participate in the Committee's discussions.

You may file written statements on meeting topics with the Committee before or after the meeting. You may also file written statements at the time of the meeting. Please refer to Docket No. 04–069–1 when submitting your statements.

Parking and Security Procedures

Please note that a fee of $2.25 is required to enter the parking lot at the USDA Center. The machine accepts $1 bills and quarters.

Upon entering the building, visitors should inform security personnel that they are attending the Advisory Committee Meeting on Foreign Animal and Poultry Diseases. Identification is required. Visitor badges must be worn at all times while inside the building.

Done in Washington, DC, this 13th day of July 2004.

W. Ron DeHaven,

Administrator, Animal and Plant Health Inspection Service.

[FR Doc. 04–16278 Filed 7–15–04; 8:45 am]

BILLING CODE 3410–34–P

DEPARTMENT OF AGRICULTURE

Forest Service

Bridger-Teton National Forest—Big Piney and Jackson Ranger Districts, WY; Lower Valley Energy Natural Gas Pipeline

AGENCY: Forest Service, USDA.

ACTION: Notice of intent to prepare an Environmental Impact Statement.

SUMMARY: The Forest Service has received an application for a special use permit for the construction and operation of a natural gas pipeline from Lower Valley Energy. This pipeline would bring natural gas service to the Jackson, Wyoming area from a location near Merna, Wyoming. Design of the proposed project, including final route selection, a proposed gas processing facility, and access needs along the pipeline route for maintenance, will also be considered in the Environmental Impact Statement (EIS).

DATES: Comments concerning the proposed action should be received by August 31, 2004. Comments on issues that you feel should be evaluated as part of this analysis or are essential to this environmental analysis process should be submitted by the above date. Please direct any project related questions or comments to the following individuals.

ADDRESSES: Send written comments to: Greg Clark, District Ranger, Big Piney Ranger District; P.O. Box 218; Big Piney, Wyoming 83113. Electronic comments may be sent to *mailroom_r4_bridger_teton@fs.fed.us* with the subject line ''Lower Valley Pipeline''.

FOR FURTHER INFORMATION CONTACT: Teresa Trulock, Project Manager, at the Big Piney Ranger District at 307–276–3375. The local contact in the Jackson area is Dave Cunningham at the Jackson Ranger District, at 307–739–5423.

SUPPLEMENTARY INFORMATION:

Project Area

The proposed Lower Valley Energy Natural Gas Pipeline project encompasses nearly 50 linear miles from Jackson to the vicinity of Merna, in Sublette and Teton Counties, Wyoming. The project area includes portions of the Big Piney and Jackson Ranger Districts of the Bridger-Teton National Forest. The proposed pipeline would parallel existing roadways and utility corridors for a portion of its proposed route. The pipeline would cross portions of the following townships: Township 36 North, Ranges 112 and 113 West; Township 37 North Ranges 111, 112, and 113 West; Township 38 North, Ranges 113, 114, and 115 West; Township 39 North, Ranges 115 and 116 West; and Township 40 North, Range 116 West; Sixth Principal Meridian.

Purpose and Need for Action

The current gas supply for Lower Valley Energy's distribution system is a liquid natural gas (LNG) facility located adjacent to its Jackson, Wyoming office. Tanker trucks currently transport LNG from the Shute Creek facility, located south of La Barge, Wyoming, to Lower Valley Energy's LNG facility. Delivery of LNG to the Jackson area requires that trucks, carrying approximately 10,000 gallons of LNG, travel approximately 120 miles (one way) on public highways (U.S. highways 287/191/26 and 89/191) on a daily basis. Approximately 665 round trips by tanker trucks are projected by the year 2010. The purpose of the proposed project is to provide a steady supply of natural gas to the Jackson area, eliminating the need for 500 to 600 tanker truck round trips per year along public highways.

Proposed Action

Lower Valley Energy proposes to construct a natural gas pipeline that will provide a steady stream of natural gas to the Jackson area, eliminating the need for trucking LNG along public highways. The proposed action would

be located on lands administered by the Forest Service, State of Wyoming lands, and private lands. Most of the pipeline route would be located on the Bridger-Teton National Forest.

Pipeline construction is anticipated to begin in mid-year 2006 and the pipeline should be fully operational by the beginning of the 2006 winter season. The pipeline's sole purpose is to deliver processed natural gas to the Jackson area. The pipeline is not designed to receive natural gas directly from gas wells. Newly discovered gas resources along the pipeline route could not and would not be added to the proposed pipeline.

Possible Alternatives

The proposed pipeline route and other potentially feasible route segments have been identified by Lower Valley Energy. Possible alternatives to the proposed action include the selection of combinations of these segments. No alternative route segment to the Hoback Canyon corridor along U.S. Highway 89/191 has been found for this portion of the proposed pipeline route. The scoping process and environmental analysis will evaluate the feasibility of alternatives to the proposed action.

Responsible Officials

Greg Clark, District Ranger; Big Piney Ranger District; P.O. Box 218; Big Piney, Wyoming 83113; and Nancy Hall, District Ranger; Jackson Ranger District; P.O. Box 1689; Jackson, Wyoming 83001.

Nature of Decision To Be Made

The decision, which is based on this analysis, will be to decide if a special use authorization will be issued to Lower Valley Energy to construct a natural gas pipeline on National Forest System land between Merna and Jackson Wyoming either through the implementation of the proposed action or an alternative to the proposed action. The decision will include mitigation measures identified as being needed during this planning process in addition to any prescribed in the Forest Plan.

Scoping Process

The Forest Service is seeking information, comments, and assistance from individuals, organizations and federal, state, and local agencies that may be interested in or affected by the proposed action (36 CFR 219.6).

Public comments will be used and disclosed in the environmental analysis documented in the Lower Valley Energy Natural Gas Pipeline EIS. Public participation will be solicited by notifying in person and/or by mail known interested and affected parties. A legal notice and news releases will be used to give the public general notice. Open houses will be held from 4 p.m. to 7 p.m. on Monday, July 19, 2004, at the Teton County Library Auditorium in Jackson and from 4 p.m. to 7 p.m. on Tuesday July 20, 2004, at the Bondurant Elementary School in Bondurant. Forest Service and Lower Valley Energy representatives will be available to explain the project and answer questions.

A reasonable range of alternative will be evaluated and reasons will be given for eliminating alternatives from detailed study. A ''no-action alternative'' is required, meaning that no pipeline would be constructed, and LNG delivery to Jackson would continue by existing methods. Alternatives will provide different pipeline routes in response to public issues, management concerns, and resource opportunities identified during the scoping process. Scoping comments and existing condition reports will also be used to develop alternatives. It is possible that no other action alternative, other than the proposed action, will be determined to be feasible by the environmental analysis.

Preliminary Issues

The Forest Service has identified the following potential issues. No determination has been made as to which issues will be examined in detail in the environmental analysis. Your input will help determine which of these issues merit detailed analysis and will also help identify additional issues related to the proposed action that may not be listed here.

- Coordination with the Wyoming Department of Transportation (WYDOT) for use of the Hoback Canyon corridor along U.S. Highway 89/191.
- Coordination with WYDOT for future maintenance of the highway and the pipeline.
- Effects of pipeline construction of the Hoback River.
- Effects of pipeline construction on wetlands.
- Rights-of-way across private lands.
- Effects of pipeline construction on individuals, property, and highway traffic.
- Public safety.
- Pipeline integrity in active landslide and fault areas.
- Effects on seasonal recreational uses.
- Effects of pipeline construction and operation on wildlife habitats
- Concern that newly discovered gas resources would be added to the pipeline, which would encourage exploration along the pipeline route (**Note:** This concern has been addressed above in the proposed action. Newly discovered gas from wells along the pipeline route will not be added to the proposed pipeline, which will carry only processed gas).

Early Notice of Importance of Public Participation in Subsequent Environmental Review

The Draft EIS (DEIS) is expected to be filed with the Environmental Protection Agency (EPA) and to be available for public comment in June 2005. At that time, the EPA will publish a notice of availability for the DEIS in the **Federal Register**. The comment period on the DEIS will be 45 days from the date the EPA publishes the notice of availability in the **Federal Register**.

The Forest Service believes, at this early stage, it is important to give reviewers notice of several court rulings related to public participation in the environmental review process. First, reviewers of the DEIS must structure their participation in the environmental review of the proposal so that it is meaningful and alerts an agency to the reviewer's position and contentions; *Vermont Yankee Nuclear Power Corp.* v. *NRDC.* 435 U.S. 519, 553 (1978). Also, environmental objections that could be raised at the DEIS stage but are not raised until after completion of the Final Environmental Impact Statement (FEIS) may be waived or dismissed by the courts; *City of Angoon* v. *Hodel,* 803 F. 2d 1016, 1022 (9th Cir. 1986) and *Wisconsin Heritages, Inc.,* v. *Harris,* 490 F. Supp. 1334, 1338 (E.D. Wis. 1980). Because of these court rulings, it is very important that those interested in this proposed action participate by the close of the 45 day comment period on the DEIS so that substantive comments and objections are made available to the Forest Service at a time when it can meaningful consider them and respond to them in the Final EIS (FEIS).

To assist the Forest Service in identifying and considering issues and concerns on the proposed actions, comments on the DEIS should be as specific as possible. It is also helpful if comments refer to specific pages or chapters of the draft statement. Comments may also address the adequacy of the DEIS or the merits of the alternatives formulated and discussed in the statements. Reviewers may wish to refer to the Council on Environmental Quality Regulations for implementing the procedural provisions of the National Environmental Policy Act at 40 CFR 1503.3 in addressing these points. Comments received, including the names and addresses of

those who comment, will be considered part of the public record on this proposal and will be available for public inspection.

(Authority: 40 CFR 1501.7 and 1508.22; Forest Service Handbook 1909.15, Section 21)

Dated: July 6, 2004.

Greg W. Clark.

District Ranger, Big Piney Ranger District, Bridger-Teton National Forest.

[FR Doc. 04–15793 Filed 7–15–04; 8:45 am]

BILLING CODE 3410–11–M

DEPARTMENT OF AGRICULTURE

Forest Service

Shasta County Resource Advisory Committee

AGENCY: Forest Services, USDA.

ACTION: Notice of meeting.

SUMMARY: The Shasta County Resource Advisory Committee (RAC) will meet at the USDA Service Center in Redding California, August 4, 2004, September 1, 2004 and October 6, 2004. The purpose of these meetings is to discuss proposed projects under Title II of the Secure Rural Schools and Community Self-Determination Act of 2000.

DATES: August 4, 2004, September 1, 2004 and October 6, 2004.

ADDRESSES: The meetings will be held at the USDA Service Center, 3644 Avtech Parkway, Redding, California 96002.

FOR FURTHER INFORMATION CONTACT: Michael R. Odle, Asst. Public Affairs Officer and RAC Coordinator.

SUPPLEMENTARY INFORMATION: The meetings are open to the public. Public input sessions will be provided and individuals will have the opportunity to address the Shasta County Resource Advisory Committee.

Dated: July 9, 2004.

J. Sharon Heywood,

Forest Supervisor, Shasta-Trinity National Forest.

[FR Doc. 04–16165 Filed 7–15–04; 8:45 am]

BILLING CODE 3410–11–M

DEPARTMENT OF AGRICULTURE

Forest Service

RIN 0596–AB90

Roadless Area Protection

AGENCY: Forest Service, USDA.

ACTION: Notice of issuance of agency interim directive.

SUMMARY: The Forest Service is reinstating interim directive (ID) 1920–2001–1 (issued Dec. 14, 2001, and expired June 14, 2003) for the management of inventoried roadless areas. The reinstated ID, now numbered ID 1920–2004–1, is intended to provide guidance for addressing road and timber management activities in inventoried roadless areas until land and resource management plans are amended or revised. The ID has been reinstated to the Forest Service Manual (FSM) Chapter 1920, Land Management Planning.

DATES: This interim directive is effective July 16, 2004.

ADDRESSES: ID 1920–2004–1 is available electronically from the Forest Service via the World Wide Web/Internet at *http://www.fs.fed.us/im/directives.* Single paper copies of the interim directive are also available by contacting the Director, Ecosystem Management Coordination Staff, Forest Service, USDA, Mail Stop 1104, 1400 Independence Ave., SW., Washington, DC 20250–1104, or by facsimile to (202) 205–1012.

FOR FURTHER INFORMATION CONTACT: Dave Barone, Planning Specialist, Ecosystem Management Coordination Staff, Forest Service (202) 205–1019.

SUPPLEMENTARY INFORMATION: The Forest Service is reinstating an interim directive (ID) to Forest Service Manual (FSM) chaper 1920 to provide guidance for the protection and management of inventoried roadless areas. The ID was originally published for comment on August 22, 2001 (66 FR 44111), and a revised ID was published for comment on December 20, 2001 (66 FR 65801). The December 2001 ID expired on June 14, 2003. This action reinstates the administrative policy that, until a land management plan is revised or an amendment is adopted that considers their protection and mangement, inventoried roadless areas shall, as a general rule, be managed to preserve their roadless characteristics. This ID also reinstates the reservation of authority to the Chief to make decisions affecting inventoried roadless areas, except in specific circumstances that generally are consistent with the exceptions in the set aside Roadless Area Conservation Rule (Roadless Rule) (36 CFR part 294), involving: (1) Road construction or road reconstruction until a forest-scale roads analysis is completed and incorporated into a forest plan, or until a determination is made that an amendment to the plan is not necessary; and (2) the cutting, sale, or removal of timber until a revision of a forest plan or adoption of a plan amendment that has considered the protection and management of inventoried roadless areas.

The reinstated ID makes two changes to the direction previously issued on December 14, 2001, in ID No. 1920–2001–1. The first change is in the Policy section at FSM 1925.03 where a statement has been added that allows the Chief to grant project-specific exceptions to the reservations of authority set out in the ID. This addition is being made to to give the Chief the flexibility to exercise discretion, on a case-by-case basis, when a Forest Supervisor or a Regional Forester requests, for good cause, that the decision authority not be reserved. The second change is at FSM 1925.04b to the authority and the responsibility of the Regional Forester for decisions on a road construction or road reconstruction project in an inventoried roadless area. This section has been revised to include all lands associated with any mineral lease, license, permit or approval issued for mineral leasing operations. This adjustment was made in order to eliminate the confusion concerning the minerals leasing program in inventoried roadless areas which involve protracted, staged decisionmaking, as well as in consideration of the interests set forth in the National Energy Plan.

There have been nine lawsuits filed in six judicial districts and four Federal circuits challenging the Roadless Rule. On May 10, 2001, the U.S. District Court for the District of Idaho issued a preliminary injunction order enjoining the Department from implementing the Roadless Rule. That order was reversed by the U.S. Court of Appeals for the Ninth Circuit. On July 14, 2003, the U.S. District Court for the District of Wyoming issued a permanent injunction order enjoining the Department from implementing the Roadless Rule. That ruling has been appealed. The roadless management ID was originally issued to provide interim protections for inventoried roadless areas because of the legal uncertainty surrounding the implementation of the Roadless Rule. There continues to be uncertainty as legal proceedings are ongoing and the ultimate outcome is far from certain. In addition, the Department of Agriculture has announced its intentions to proceed with a new rulemaking addressing inventoried roadless area management. The Forest Service is not yet prepared to adopt a final policy, and feels that reinstating the interim policy is the best course of action at this time.

The agency believes that the interim policy contained in the ID provides stability to roadless area management

and appropriate protection of roadless values in inventoried roadless areas.

Dated: July 12, 2004.

Dale N. Bosworth,

Chief.

[FR Doc. 04–16192 Filed 7–15–04; 8:45 am]

BILLING CODE 3410–11–P

COMMITTEE FOR PURCHASE FROM PEOPLE WHO ARE BLIND OR SEVERELY DISABLED

Procurement List Proposed Additions

AGENCY: Committee for Purchase From People Who Are Blind or Severely Disabled.

ACTION: Proposed additions to Procurement List.

SUMMARY: The Committee is proposing to add to the Procurement List services to be furnished by nonprofit agencies employing persons who are blind or have other severe disabilities.

Comments Must be Received on or Before: August 15, 2004.

ADDRESSES: Committee for Purchase From People Who Are Blind or Severely Disabled, Jefferson Plaza 2, Suite 10800, 1421 Jefferson Davis Highway, Arlington, Virginia 22202–3259.

FOR FURTHER INFORMATION CONTACT: Sheryl D. Kennerly, (703) 603–7740.

SUPPLEMENTARY INFORMATION: This notice is published pursuant to 41 U.S.C 47(a) (2) and 41 CFR 51–2.3. Its purpose is to provide interested persons an opportunity to submit comments on the proposed actions. If the Committee approves the proposed additions, the entities of the Federal Government identified in the notice for each service will be required to procure the services listed below from nonprofit agencies employing persons who are blind or have other severe disabilities.

Regulatory Flexibility Act Certification

I certify that the following action will not have a significant impact on a substantial number of small entities. The major factors considered for this certification were:

1. If approved, the action will not result in any additional reporting, recordkeeping or other compliance requirements for small entities other than the small organizations that will furnish the services to the Government.

2. If approved, the action will result in authorizing small entities to furnish the services to the Government.

3. There are no known regulatory alternatives which would accomplish the objectives of the Javits-Wagner-O'Day Act (41 U.S.C. 46–48c) in connection with the services proposed for addition to the Procurement List.

Comments on this certification are invited. Commenters should identify the statement(s) underlying the certification on which they are providing additional information.

End of Certification

The following services are proposed for addition to Procurement List for production by the nonprofit agencies listed:

Services

Service Type/Location: Custodial Services, Department of Homeland Security, Border Patrol—Curlew Station, Curlew, Washington.

NPA: Ferry County Community Services, Republic, Washington.

Contract Activity: U.S. Bureau of Customs & Border Protection, Spokane, Washington.

Service Type/Location: Facilities Management, Maude R. Toulson Federal Building, 129 East Main Street, Salisbury, Maryland, Social Security Administration Building, 668 East Main Street, Salisbury, Maryland.

NPA: The Chimes, Inc., Baltimore, Maryland.

Contract Activity: GSA, Chesapeake Realty Services Office (3PCC), Baltimore, Maryland.

Service Type/Location: Food Service, Armed Forces Retirement Home—Washington (AFRH–W), 3700 North Capitol Street, NW., Washington, DC.

NPA: Lakeview Center, Inc., Pensacola, Florida.

Contract Activity: Bureau of Public Debt, Parkersburg, West Virginia.

Sheryl D. Kennerly,

Director, Information Management.

[FR Doc. 04–16188 Filed 7–15–04; 8:45 am]

BILLING CODE 6353–01–P

COMMITTEE FOR PURCHASE FROM PEOPLE WHO ARE BLIND OR SEVERELY DISABLED

Procurement List; Additions and Deletions

AGENCY: Committee for Purchase from People Who Are Blind or Severely Disabled.

ACTION: Additions to and deletions from Procurement List.

SUMMARY: This action adds to the Procurement List services to be furnished by nonprofit agencies employing persons who are blind or have other severe disabilities, and deletes from the Procurement List products and services previously furnished by such agencies.

DATES: Effective August 15, 2004.

ADDRESSES: Committee for Purchase From People Who Are Blind or Severely Disabled, Jefferson Plaza 2, Suite 10800, 1421 Jefferson Davis Highway, Arlington, Virginia, 22202–3259.

FOR FURTHER INFORMATION CONTACT: Sheryl D. Kennerly, (703) 603–7740.

SUPPLEMENTARY INFORMATION:

Additions

On May 14, 2004, the Committee for Purchase From People Who Are Blind or Severely Disabled published notice (69 FR 26805) of proposed additions to the Procurement List. After consideration of the material presented to it concerning capability of qualified nonprofit agencies to provide the services and impact of the additions on the current or most recent contractors, the Committee has determined that the services listed below are suitable for procurement by the Federal Government under 41 U.S.C. 46–48c and 41 CFR 51–2.4.

Regulatory Flexibility Act Certification

I certify that the following action will not have a significant impact on a substantial number of small entities. The major factors considered for this certification were:

1. The action will not result in any additional reporting, recordkeeping or other compliance requirements for small entities other than the small organizations that will furnish the services to the Government.

2. The action will result in authorizing small entities to furnish the services to the Government.

3. There are no known regulatory alternatives which would accomplish the objectives of the Javits-Wagner-O'Day Act (41 U.S.C. 46–48c) in connection with the services proposed for addition to the Procurement List.

End of Certification

Accordingly, the following services are added to the Procurement List:

Services

Service Type/Location: Custodial Services, Internal Revenue Service Building, 106 S. 15th Street, Omaha, Nebraska.

NPA: Goodwill Specialty Services, Inc., Omaha, Nebraska.

Contract Activity: GSA, PBS—Region 6, Kansas City, Missouri.

Service Type/Location: Custodial Services, Judiciary Square, 633 3rd Street, NW, Washington, DC.

NPA: Melwood Horticultural Training Center, Upper Marlboro, Maryland.

Contract Activity: GSA, PBS, National Capitol Region, Washington, DC.

Deletions

On April 20, May 14, and May 21, 2004, the Committee for Purchase From People Who Are Blind or Severely Disabled published notice (69 FR 23723, 26805, and 29261) of proposed deletions to the Procurement List.

After consideration of the relevant matter presented, the Committee has determined that the products and services listed below are no longer suitable for procurement by the Federal Government under 41 U.S.C. 46–48c and 41 CFR 51–2.4.

Regulatory Flexibility Act Certification

I certify that the following action will not have a significant impact on a substantial number of small entities. The major factors considered for this certification were:

1. The action may result in additional reporting, recordkeeping or other compliance requirements for small entities.

2. The action may result in authorizing small entities to furnish the products and services to the Government.

3. There are no known regulatory alternatives which would accomplish the objectives of the Javits-Wagner-O'Day Act (41 U.S.C. 46–48c) in connection with the products and services deleted from the Procurement List.

End of Certification

Accordingly, the following products and services are deleted from the Procurement List:

Products

Product/NSN: Pen, Pilot Explorer and Refills
7510–01–425–5703 (Refill, Black)
7510–01–425–5716 (Refill, Blue)
7520–01–424–4862 (Pen)
NPA: San Antonio Lighthouse, San Antonio, Texas.
Contract Activity: Office Supplies & Paper Products Acquisition Center, New York, New York.

Services

Service Type/Location: Janitorial/Custodial, Federal Building & U.S. Post Office, Dyersburg, Tennessee.
NPA: Madison Haywood Developmental Services, Jackson, Tennessee.
Contract Activity: General Services Administration. Birmingham, Alabama.
Service Type/Location: Toner Cartridge Remanufacturing, Veterans Affairs Medical Center, Seattle, Washington.
NPA: Community Option Resource Enterprises, Inc., Billings, Montana.
Contract Activity: Department of Veterans Affairs, Washington, DC.

Sheryl D. Kennerly,

Director, Information Management.

[FR Doc. 04–16189 Filed 7–15–04; 8:45 am]

BILLING CODE 6353–01–P

DEPARTMENT OF COMMERCE

Submission for OMB Review; Comment Request

DOC has submitted to the Office of Management and Budget (OMB) for clearance the following proposal for collection of information under the provisions of the Paperwork Reduction Act (44 U.S.C. chapter 35).

Agency: U.S. Census Bureau.

Title: Generic Clearance for Questionnaire Pretesting Research.

Form Number(s): Various.

Agency Approval Number: 0607–0725.

Type of Request: Extension of a currently approved collection.

Burden: 5,500 hours.

Number of Respondents: 5,500.

Avg. Hours Per Response: 1 hour.

Needs and Uses: In recent years, there has been an increased interest among Federal agencies and others in the importance of testing questionnaires. In response to this recognition, new methods have come into popular use, which are useful for identifying questionnaire and procedural problems, suggesting solutions, and measuring the relative effectiveness of alternative solutions.

The Census Bureau received a generic clearance which enables the Census Bureau to quickly begin conducting extended cognitive and questionnaire design research as part of testing for its censuses and surveys. At this time, the Census Bureau is seeking another three-year renewal of the generic clearance for pretesting. This will enable the Census Bureau to continue providing support for pretesting activities, which is important given the length of time required to plan the activities.

The methods proposed for use in questionnaire development are as follows: Field test, Respondent debriefing questionnaire, Split sample experiments, Cognitive interviews, and Focus groups.

Since the types of surveys included under the umbrella of the clearance are so varied, it is impossible to specify at this point what kinds of activities would be involved in any particular test. But at a minimum, one of the types of testing described above or some other form of cognitive pretesting would be incorporated into the testing program for each survey.

We will provide OMB with a copy of questionnaires and debriefing materials in advance of any testing activity. Depending on the stage of questionnaire development, this may be the printed questionnaire from the last round of a survey or a revised draft based on analysis of other evaluation data. When the time schedule for a single survey permits multiple rounds of testing, the questionnaire(s) for each round will be provided separately. When split sample experiments are conducted, either in small group sessions or as part of a field test, all the questionnaires to be used will be provided. For a test of alternative procedures, the description and rationale for the procedures would be submitted. A brief description of the planned field activity will also be provided. Requests for information or comments on substantive issues may be raised by OMB within 10 working days of receipt.

The Census Bureau will send OMB an annual report at the end of each year summarizing the number of hours used, as well as the nature and results of the activities completed under this clearance.

The information collected in this program of developing and testing questionnaires will be used by staff from the Census Bureau and sponsoring agencies to evaluate and improve the quality of the data in the surveys and censuses that are ultimately conducted. None of the data collected under this clearance will be published for its own sake.

Because the questionnaires being tested under this clearance are still in the process of development, the data that result from these collections are not considered official statistics of the Census Bureau or other Federal agencies. Data will be included in research reports prepared for sponsors inside and outside of the Census Bureau. The results may also be prepared for presentations related to survey methodology at professional meetings or publications in professional journals.

Affected Public: Individuals or households, businesses or other for-profit, farms.

Frequency: On occasion.

Respondent's Obligation: Voluntary.

Legal Authority: Data collection for this project is authorized under the authorizing legislation for the questionnaire being tested. This may be title 13, sections 131, 141, 161, 181, 182, 193, and 301, for Census-Bureau sponsored surveys, and title 13 and 15 for surveys sponsored by other Federal agencies.

OMB Desk Officer: Susan Schechter, (202) 395–5103.

Copies of the above information collection proposal can be obtained by calling or writing Diana Hynek, Departmental Paperwork Clearance Officer, (202) 482–0266, Department of Commerce, room 6625, 14th and

Constitution Avenue, NW., Washington, DC 20230 (or via the Internet at *dhynek@doc.gov*).

Written comments and recommendations for the proposed information collection should be sent within 30 days of publication of this notice to Susan Schechter, OMB Desk Officer either by fax (202–395–7245) or e-mail (*susan_schechter@omb.eop.gov*).

Dated: July 12, 2004.

Madeleine Clayton,

Management Analyst, Office of the Chief Information Officer.

[FR Doc. 04–16135 Filed 7–15–04; 8:45 am]

BILLING CODE 3510–07–P

DEPARTMENT OF COMMERCE

Submission for OMB Review; Comment Request

DOC has submitted to the Office of Management and Budget (OMB) for clearance the following proposal for collection of information under the provisions of the Paperwork Reduction Act of 1995, Public Law 104–13.

Bureau: International Trade Administration.

Title: Application for the President's ''E'' and ''E STAR'' Awards for Export Expansion.

Agency Form Number: ITA–725P.

OMB Number: 0625–0065.

Type of Request: Regular submission.

Estimated Burden: 200.

Estimated Number of Respondents: 10.

Est. Avg. Hours per Response: 20 hours.

Needs and Uses: The President's ''E'' Award for Excellence in Exporting is our nation's highest award to honor American exporters. ''E'' Awards recognize firms and organizations for their competitive achievements in world markets, as well as the benefits of their success to the U.S. economy. The President's ''E–Star'' Award recognizes the sustained prior international marketing performance of ''E'' Award winners.

Affected public: Business and other for-profit; not for profit institutions; individuals or households; farms; and State, local, or tribal governments.

Frequency: On occasion.

Respondents Obligation: Voluntary.

OMB Desk Officer: David Roster, (202) 395–7340.

Copies of the above information collection proposal can be obtained by calling or writing Diana Hynek, Departmental Paperwork Clearance Officer, Department of Commerce, Room 6625, 14th & Constitution Ave., NW., Washington, DC 20230. Phone (202) 482–0266.

Written comments and recommendations for the proposed information collection should be sent to David Rostker, OMB Desk Officer, Room 10202, New Executive Office Building, Washington, DC 20503 within 30 days of the publication of this notice in the **Federal Register**.

Dated: July 12, 2004.

Madeleine Clayton,

Office of the Chief Information Officer.

[FR Doc. 04–16136 Filed 7–15–04; 8:45 am]

BILLING CODE 3510–FP–P

DEPARTMENT OF COMMERCE

Census Bureau

2004–2006 Company Organization Survey

ACTION: Proposed information collection; comment request.

SUMMARY: The Department of Commerce, as part of its continuing efforts to reduce paperwork and respondent burden, invites the general public and other Federal agencies to take this opportunity to comment on proposed and/or continuing information collections, as required by the Paperwork Reduction Act of 1995, Public Law 104–13 (44 U.S.C. 3506(c)(2)(A)).

DATES: Written comments must be submitted on or before September 14, 2004.

ADDRESSES: Direct all written comments to Diana Hynek, Departmental Paperwork Clearance Officer, Department of Commerce, Room 6625, 14th and Constitution Avenue, NW., Washington, DC 20230 (or via the Internet at *dhynek@doc.gov*).

FOR FURTHER INFORMATION CONTACT: Requests for additional information or copies of the information collection instrument(s) and instructions should be directed to Paul Hanczaryk, U.S. Census Bureau, Room 2747, Federal Building 3, Washington, DC 20233–6100; telephone (301) 763–4058.

SUPPLEMENTARY INFORMATION:

I. Abstract

The Census Bureau conducts the annual Company Organization Survey (COS) in order to update and maintain a central, multipurpose Business Register (BR). In particular, the COS supplies critical information on the composition, organizational structure, and operating characteristics of multi-location companies.

The BR serves two fundamental purposes:

First and most important, it provides sampling populations and enumeration lists for the Census Bureau's economic surveys and censuses, and it serves as an integral part of the statistical foundation underlying those programs. Essential for this purpose is the BR's ability to identify all known United States business establishments and their parent companies. Further, the BR must accurately record basic business attributes needed to control sampling and enumeration. These attributes include industrial and geographic classifications, and contact information (for example, name and address).

Second, it provides establishment data that serve as the basis for the annual County Business Patterns (CBP) statistical series. The CBP reports present data on number of establishments, first quarter payroll, annual payroll, and mid-March employment summarized by industry and employment size class for the United States, the District of Columbia, Puerto Rico, counties, and county-equivalents. No other annual or more frequent series of industry statistics provides comparable detail, particularly for small geographic areas.

II. Method of Collection

The Census Bureau will conduct the 2004–2006 COS in a similar manner as the 2003 COS. These collections will direct inquiries to approximately 55,000 multi-establishment companies, which operate over 1.2 million establishments. This panel will be drawn from the BR universe of nearly 200,000 multi-establishment companies, which operate 1.6 million establishments. Additionally, the panel will include approximately 10,000 large single-establishment companies that may have added locations during the year.

The mailing list for the 2004–2006 COS will include a certainty component, consisting of all multi-establishment companies with 50 or more employees, and those multi-establishment companies with administrative record values that indicate organizational changes. A non-certainty component will be drawn from the remaining multi-establishment companies based on employment size. The mailing list also will include entities that are most likely to have added establishments at other locations.

For 2004–2006, electronic reporting will be available to all COS respondents. Companies will receive and return responses by secure Internet transmission. Companies that cannot use the Internet will receive a CD–ROM containing their electronic data. All respondents will be allowed to mail the

data via diskette or CD–ROM or submit their response data via the Internet.

The instrument will include inquiries on ownership or control by a domestic parent, ownership or control by a foreign parent, and ownership of foreign affiliates. Further, the instrument will list an inventory of establishments belonging to the company and its subsidiaries, and will request updates to these inventories, including additions, deletions, and changes to information on EIN, name and address, industrial classification, payroll, end-of-year operating status, mid-March employment, first quarter payroll, and annual payroll.

Additionally, the Census Bureau will ask certain questions in the 2004–2006 COS in order to enhance content. We will include questions on leased employees working in the company and questions on research and development activities performed by the company.

III. Data

OMB Number: 0607–0444.

Form Number: NC–99001 and NC–99007 (for single-location companies).

Type of Review: Regular submission.

Affected Public: Businesses and not-for-profit institutions.

Estimated Number of Respondents: 65,000 enterprises.

Estimated Time per Response: 2.09 hours.

Estimated Total Annual Burden Hours: 135,917.

Estimated Total Annual Cost: Included in the total annual cost of the BR, which is estimated to be $10.9 million for fiscal year 2004.

Respondent's Obligation: Mandatory.

Legal Authority: Title 13 of United States Code, Sections 182, 195, 224, and 225.

IV. Request for Comments

Comments are invited on: (a) Whether the proposed collection of information is necessary for the proper performance of the functions of the agency, including whether the information shall have practical utility; (b) the accuracy of the agency's estimate of the burden (including hours and cost) of the proposed collection of information; (c) ways to enhance the quality, utility, and clarity of the information to be collected; and (d) ways to minimize the burden of the collection of information on respondents, including through the use of automated collection techniques or other forms of information technology.

Comments submitted in response to this notice will be summarized and/or included in the request for OMB approval of this information collection; they also will become a matter of public record.

Dated: July 12, 2004.

Madeleine Clayton,

Office of the Chief Information Officer.

[FR Doc. 04–16134 Filed 7–15–04; 8:45 am]

BILLING CODE 3510–07–P

DEPARTMENT OF COMMERCE

Bureau of Industry and Security

[Docket No. 040706200–4200–01]

Addition of Persons to the Unverified List, Guidance To Exporters as to ''Red Flags,'' and Criteria for Listing of Unverified Persons in Foreign Countries

AGENCY: Bureau of Industry and Security, Commerce.

ACTION: Notice.

SUMMARY: On June 14, 2002, the Bureau of Industry and Security (''BIS'') published a notice in the **Federal Register** establishing a list of persons in foreign countries who were parties to past export transactions where pre-license checks or post-shipment verifications could not be conducted for reasons outside the control of the U.S. Government (''Unverified List''). See 67 FR 40910. That notice also advised exporters that the involvement of a listed person as a party to a proposed transaction constitutes a ''red flag'' as described in the guidance set forth in Supplement No. 3 to 15 CFR part 732. Under that guidance, the ''red flag'' requires heightened scrutiny by the exporter (and others involved in the transaction) before proceeding with a transaction in which a listed person is a party. Since that time, BIS has issued subsequent notices that added persons to and removed them from the Unverified List, as circumstances warranted. This notice advises exporters that the Unverified List will now also include persons in foreign countries in situations where BIS is not able to verify the existence or authenticity of the end user, intermediate consignee, ultimate consignee, or other party to an export transaction. This notice also adds five persons to the Unverified List and advises exporters that the involvement of these persons as a party to a proposed transaction constitutes a ''red flag.''

DATES: This notice is effective July 16, 2004.

FOR FURTHER INFORMATION CONTACT: Thomas W. Andrukonis, Office of Enforcement Analysis, Bureau of Industry and Security, Telephone: (202) 482–4255.

SUPPLEMENTARY INFORMATION:

Background

In administering export controls under the Export Administration Regulations (15 CFR parts 730 to 774) (EAR), BIS carries out a number of preventive enforcement activities with respect to individual export transactions. Such activities are intended to assess diversion risks, identify potential violations, verify end-uses, and determine the suitability of end-users to receive U.S. commodities or technology. In carrying out these activities, BIS officials, or officials of other federal agencies acting on BIS's behalf, selectively conduct pre-license checks (''PLCs'') to verify the bona fides of the transaction and the suitability of the end-user or ultimate consignee. In addition, such officials sometimes carry out post-shipment verifications (''PSVs'') to ensure that U.S. exports have actually been delivered to the authorized end-user, are being used in a manner consistent with the terms of a license or license exception, and are otherwise consistent with the EAR.

A. Inclusion of Persons on the Unverified List

In certain instances BIS officials, or other federal officials acting on BIS's behalf, have been unable to perform a PLC or PSV with respect to certain export control transactions, for reasons outside the control of the U.S. Government (including a lack of cooperation by the host government authority, the end-user, or the ultimate consignee). As a result, certain foreign end-users and consignees involved in such transactions have been listed on the Unverified List.

This notice advises exporters and other persons that the Unverified List will now also include persons involved in export transactions where BIS has not been able to verify the existence or authenticity of the end user, intermediate consignee, ultimate consignee, or other party to an export transaction. This could include situations where the end-users or consignees are merely post-office boxes, drop shipment points, or front companies.

The inability of BIS to verify the nature of the activities, or suitability of any end-user or consignee involved in an export transaction can raise concerns about the bona fides of such person, and that person's suitability for participation in future transactions subject to the EAR. Accordingly, BIS continues to advise the exporting community that the participation of a person on the Unverified List in any proposed

transaction will be considered by BIS to raise a ''red flag'' for purposes of the ''Know Your Customer'' guidance set forth in Supplement No. 3 to 15 CFR part 732. Under that guidance, whenever there is a ''red flag,'' exporters and other persons have an affirmative duty to inquire, verify, or otherwise substantiate the proposed transaction to satisfy themselves that the transaction does not involve a proliferation activity prohibited by part 744, and does not violate other provisions of the EAR.

The listing of a person on the Unverified List does not equate to a licensing requirement such as that imposed on persons included on the Entity List in 15 CFR part 744. If an exporter or other person involved in the transaction is satisfied that the transaction does not involve a proliferation activity and does not violate any other provision of the EAR, the exporter may proceed with the transaction notwithstanding the inclusion of the person on the Unverified List. If an exporter or other person involved in a transaction continues to have reasons for concern after the inquiry, that person should refrain from such transaction or submit all relevant information to BIS in the form of an application for a license or a request for an advisory opinion. Periodically, BIS will add persons to the Unverified List based on the criteria set forth above, and remove the names of persons from the Unverified List when warranted. Moreover, BIS may add to the Unverified List names of persons that BIS discovers are affiliated with a person on the Unverified List by virtue of ownership, control, position of responsibility, or other affiliation or connection in the conduct of trade or business. Persons on the Unverified List may request that BIS review their inclusion on the Unverified List by filing an appeal in accordance with 15 CFR part 756.

B. Addition of New Entities on the Unverified List

This notice advises exporters and other persons that BIS has added the following five entities to the Unverified List:

Jetpower Industrial Ltd, Room 311, 3rd Floor, Wing On Plaza, 62 Mody Road,Tsim Sha Tsui East, Kowloon, Hong Kong Special Administrative Region.

Onion Enterprises Ltd., Room 311, 3rd Floor, Wing On Plaza, 62 Mody Road, Tsim Sha Tsui East, Kowloon, Hong Kong Special Administrative Region.

Lucktrade International, Room 311, 3rd Floor, Wing On Plaza, 62 Mody Road, Tsim Sha Tsui East, Kowloon, Hong Kong Special Administrative Region.

Litchfield Co. Ltd., Room 311, 3rd Floor, Wing On Plaza, 62 Mody Road, Tsim Sha Tsui East, Kowloon, Hong Kong Special Administrative Region.

Sunford Trading Ltd., Unit 2208, 22/F, 118 Connaught Road West, Hong Kong Special Administrative Region.

This notice advises exporters that Jetpower International Ltd., Onion Enterprises Ltd, Litchfield Co. Ltd, and Sunford Trading Ltd are added to the Unverified List, and that a second address has been added for Lucktrade International in the Hong Kong Special Administrative Region. A ''red flag'' now exists for transactions involving these persons due to their inclusion on the Unverified List. As a result, exporters have an affirmative duty to inquire, verify, or otherwise substantiate the proposed transaction to satisfy themselves that the transaction does not involve a proliferation activity prohibited in 15 CFR Part 744, and does not violate other provisions of the EAR.

The Unverified List, as modified by this notice, is set forth below.

Julie L. Myers,

Assistant Secretary for Export Enforcement.

Unverified List (as of July 16, 2004)

The Unverified List includes names, countries, last known addresses of foreign persons involved in export transactions with respect to which: the Bureau of Industry and Security (''BIS'') could not conduct a pre license check (''PLC'') or a post shipment verification (''PSV'') for reasons outside the U.S. Government's control; and/or BIS was not able to verify the existence or authenticity of the end user, intermediate consignee, ultimate consignee or other party to an export transaction. Any transaction to which a listed person is a party will be deemed to raise a ''red flag'' with respect to such transaction within the meaning of the guidance set forth in Supplement No. 3 to 15 CFR part 732. The red flag applies to the person on the Unverified List regardless of where the person is located in the country included on the list.

Name	Country	Last known address
Lucktrade International	Hong Kong Special Administrative Region.	P.O. Box 91150, Tsim Sha Tsui, Hong Kong.
Brilliant Intervest	Malaysia	14–1, Persian 65C, Jalan Pahang, Barat, Kuala Lumpur, 53000.
Dee Communications M SDN. BHD	Malaysia	G5/G6, Ground Floor, Jin Gereja Johor Bahru.
Shaanxi Telecom Measuring Station	People's Republic of China	39 Jixiang Road, Yanta District, Xian, Shaanxi.
Yunma Aircraft Mfg	People's Republic of China	Yaopu, Anshun, Guizhou.
Civil Airport Construction Corporation	People's Republic of China	111 Bei Sihuan Str. East, Chao Yang District, Beijing.
Power Test & Research Institute of Guangzhou	People's Republic of China	No. 38 East Huangshi Road, Guangzhou.
Beijing San Zhong Electronic Equipment Engineer Co., Ltd.	People's Republic of China	Hai Dian Fu Yuau, Men Hao 1 Hao, Beijing.
Huabei Petroleum Administration Bureau Logging Company.	People's Republic of China	South Yanshan Road, Ren Qiu City, Hebei.
Peluang Teguh	Singapore	203 Henderson Road #09–05H, Henderson Industrial Park, Singapore.
Lucktrade International PTE Ltd	Singapore	35 Tannery Road #01–07 Tannery Block, Ruby Industrial Complex, Singapore 347740.
Arrow Electronics Industries	United Arab Emirates	204 Arbift Tower, Benyas Road, Dubai.
Jetpower Industrial Ltd	Hong Kong Special Administrative Region.	Room 311, 3rd Floor, Wing On Plaza, 62 Mody Road, Tsim Sha Tsui East, Kowloon.
Onion Enterprises Ltd	Hong Kong Special Administrative Region.	Room 311, 3rd Floor, Wing On Plaza, 62 Mody Road, Tsim Sha Tsui East, Kowloon.
Lucktrade International	Hong Kong Special Administrative Region.	Room 311, 3rd Floor, Wing On Plaza, 62 Mody Road, Tsim Sha Tsui East, Kowloon.
Litchfield Co. Ltd	Hong Kong Special Administrative Region.	Room 311, 3rd Floor, Wing On Plaza, 62 Mody Road, Tsim Sha Tsui East, Kowloon.

Name	Country	Last known address
Sunford Trading Ltd	Hong Kong Special Administrative Region.	Unit 2208, 22/F, 118 Connaught Road West.

[FR Doc. 04–16143 Filed 7–15–04; 8:45 am]

BILLING CODE 3510–33–P

DEPARTMENT OF COMMERCE

International Trade Administration

[A–570–893]

Notice of Preliminary Determination of Sales at Less Than Fair Value, Partial Affirmative Preliminary Determination of Critical Circumstances and Postponement of Final Determination: Certain Frozen and Canned Warmwater Shrimp From the People's Republic of China

AGENCY: Import Administration, International Trade Administration, Department of Commerce.

EFFECTIVE DATE: July 16, 2004.

FOR FURTHER INFORMATION CONTACT: James C. Doyle or Alex Villanueva, Import Administration, International Trade Administration, U.S. Department of Commerce, 14th Street and Constitution Avenue, NW., Washington, DC 20230; telephone: (202) 482–0159, or 482–3208, respectively.

Preliminary Determination

We preliminarily determine that certain frozen and canned warmwater shrimp from the People's Republic of China (''PRC'') is being, or is likely to be, sold in the United States at less than fair value (''LTFV''), as provided in section 733 of the Tariff Act of 1930, as amended (''the Act''). The estimated margins of sales at LTFV are shown in the ''Suspension of Liquidation'' section of this notice.

Interested parties are invited to comment on this preliminary determination. We will make our final determination not later than 135 days after the date of publication of this preliminary determination.

Case History

On December 31, 2003, the Ad Hoc Shrimp Trade Action Committee, an ad hoc coalition representative of U.S. producers of frozen and canned warmwater shrimp and harvesters of wild-caught warmwater shrimp (hereafter known as, the ''Petitioners'') filed, in proper form, petitions on imports of certain frozen and canned warmwater shrimp from Brazil, Ecuador, India, Thailand, the PRC, and the Socialist Republic of Vietnam (''Vietnam''), filed in proper form by. On January 12, 2003, the Petitioners filed amendments to the petitions.

On January 8, 2004, the Department requested additional information about the petition from the Petitioners.

On January 12, 2004, the Coalition of Shrimp Exporters/Producers of South China (the ''PRC Shrimp Coalition''), Allied Pacific Group [1], the National Chamber of Aquaculture of Ecuador (''Expalsa''), the Thai Frozen Foods Association (''TFFA''), the Vietnam Association of Seafood Exporters and Producers (''VASEP''), the Vietnamese Shrimp Committee (''VSC''), the Association of Brazilian Shrimp Producers, and the Seafood Exporters'Association of India (''SEAI'') submitted comments regarding domestic industry support. On January 13, 2004, the Department requested that all interested parties submit comments on the Petitioners' calculation of industry support.

On January 13, 2004, the Petitioners filed a supplement to the petition.

On January 15, 2004, the Department received affidavits in support of the Petitioners' calculation of industry support. On January 15, 2004, the Respondents submitted additional comments regarding domestic industry support. On January 16, 2004, the Petitioners submitted rebuttal comments to the Respondents' January, 15, 2004 comments regarding industry support.

On January 16, 2004, the Louisiana Shrimp Association (''LSA'') filed comments regarding the petitions.

On January 20, 2004, the Petitioners submitted supplemental information to the petition and revised comments to their January 16, 2004, submission.

On January 20, 2004, the Department initiated antidumping duty investigations on certain frozen and canned warmwater shrimp from Brazil, Ecuador, India, Thailand, the PRC and Vietnam. *See Notice of Initiation of Antidumping Duty Investigations: Certain Frozen and Canned Warmwater Shrimp from Brazil, Ecuador, India, Thailand, the People's Republic of China and the Socialist Republic of Vietnam (''Initiation Notice'')* 69 FR 3876 (January 27, 2004). On January 20, 2004, the Department notified the International Trade Commission (''ITC'') of the antidumping investigation initiation and the intent to publish in the **Federal Register** a notice of such initiation.

Post-Initiation General Case Issues and Letters From Outside Parties

On February 4, 2004, the Petitioners filed an amendment to the petition adding Versaggi Shrimp Corporation and Indian Ridge Shrimp Company as petitioners.

On February 10, 2004, the Department issued initiation instructions to U.S. Customs and Border Protection (''CBP'').

On March 2, 2004, the ITC made an affirmative preliminary determination in the antidumping investigation and published its report on such determination. *See Certain Frozen or Canned Warmwater Shrimp and Prawns from Brazil, China, Ecuador, India, Thailand and Vietnam (''ITC Injury Notice'')* 69 FR 9842 (March 2, 2004).

On March 11, 2004, the Department sent the Commercial Secretary at the Embassy of China notice of the initiation of an antidumping investigation as well as the questionnaires sent to all Respondents.

On May 24, 2004, the Department published in the **Federal Register** a notice of the postponement of the preliminary determination for this antidumping duty investigation. *See Notice of Postponement of Preliminary Determination of Antidumping Duty Investigations: Certain Frozen and Canned Warmwater Shrimp from Brazil (A–353–838), Ecuador (A–331–802), India (A–533–840), Thailand (A–549–822), PRC (A–570–893) and Vietnam (A–503–802* [2]*)*, 69 FR 29509 (May 24, 2004) (''*Postponement Notice*'').

On June 15, 2004, the Petitioners filed comments on the Respondents' request to postpone the final determination.

CONNUM Comments

On January 28, 2004, the Department requested comments from interested parties regarding the appropriate product characteristic criteria for the investigation matching hierarchy for comparing the export price to normal value.

[1] Allied Pacific (H.K.) Co., Ltd.; Allied Pacific Aquatic Products (Zhanjiang) Co., Ltd.; Allied Pacific Food (Dalian) Co., Ltd.; and Allied Pacific Aquatic Products (Zhongshan) Co., Ltd.; and King Royal Investments, Ltd. (collectively, ''Allied Pacific Group'').

[2] The Department inadvertently listed case number A–503–882 as Vietnam's case number in the *Postponement Notice*. The correct case number for Vietnam is A–552–802.

On February 4, 2004, the Department received model match comments from the VSC [3]; TFFA [4]; the PRC Shrimp Coalition [5]; Camara Nacional de Acuacultura (''CNA''); Union Frozen Products Co., Ltd. (''UFP''); SEAI; the Marine Products Export Development Authority (''MPEDA''); and the Petitioners.

On February 9, 2004, VSC and TFFA filed replies to the Petitioners' February 4, 2004, model match submissions. On February 10, 2004, CNA submitted a reply to the Petitioners February 14, 2004, model match comments.

On February 11, 2004, the Petitioners filed rebuttal comments in response to model matching comments submitted by respondents in the investigation. On February 17, 2004, the Department requested comments from all interested parties on product characteristic reporting.

On February 18, 2004, the PRC Shrimp Coalition, Yelin, and Allied Pacific Group requested an extension of the time to comment on draft product characteristics. On February 18, 2004, the Department extended the deadline for submission of comments on draft product characteristics until February 23, 2004.

On February 18, 2004, SEAI submitted model match comments. On February 18, 2004, the Department alerted the Petitioners and interested parties to an error in the draft product characteristics. On February 19, 2004, the UFP, CNA, and TFFA submitted model match comments.

On February 23, 2004, Allied Pacific Group submitted comments on the proposed CONNUM fields.

On February 23, 2004, VSC, the Brazilian shrimp exporters, and the Petitioners submitted model match comments.

On March 9, 2004, the Department informed all interested parties of revised reporting requirements.

On June 7, 2004, the Department received Rubicon's [6], CNA's, VSC's, EMPAF's, and the Petitioner's comments on product comparison methodology.

Scope Comments

On February 17, 2004, the Department received scope comments from the Ocean Duke Corporation (''Ocean Duke'') requesting that the Department confirm that ''dusted shrimp,'' ''battered shrimp,'' and ''seafood mix,'' not be covered by the scope of the investigation. On February 17, 2004, LSA filed scope comments. On February 27, 2004, Rubicon submitted comments in support of Ocean Duke's comments concerning the status of dusted and battered shrimp. On March 4, 2004, Ocean Duke requested scope clarification regarding dusted shrimp, battered shrimp, and seafood mix.

On March 12, 2004, the Petitioners filed their reply to LSA's scope comments. On March 16, 2004, the Petitioners filed their reply to various other scope comments.

On April 16, 2004, Ocean Duke submitted additional scope comments discussing the concept that dusted and battered shrimp fall within the meaning of breaded shrimp.

On May 6, 2004, SEAI filed comments on product coverage.

On May 10, 2004, Exportadora de Alimentons S.A. (''Expalsa'') filed scope comments from Expalsa.

On May 19, 2004, the Petitioners submitted scope comments regarding dusted and battered shrimp, organic shrimp and warmwater salad shrimp, and the species *Macrobachium rosenbergii*.

On June 9, 2004, the Department received certifications of factual accuracy not found in time for filing with the American Breaded Shrimp Processors Association's (''ABSPA'') June 7, 2004, request for a scope determination.

On June 4, 2004, Ocean Duke and Expalsa submitted replies to the Petitioners' May 19, 2004, scope comments.

Quantity and Value (Q&V) Questionnaires

On January 29, 2004, the Department sent a letter to all interested parties requesting the quantity and value of all exports to the United States. On January 29, 2004, the Department notified the Commercial Secretary at the Embassy of the PRC of the initiation of an antidumping duty investigation and its request for quantity and value information with regard to exports to the United States. On February 3, 2004, the PRC Shrimp Coalition and Allied Pacific Group requested an extension of the response time to the Department's Q&V questionnaire. On February 4, 2004, the Department extended the deadline for filing Q&V data until February 9, 2004.

On February 9, 2004, the Department received volume and value data information from Allied Pacific Group; Shantou Yuexing Enterprise Company; Shantou Sez Xu Hao Fastness Freeze Aquatic Factory Co., Ltd.; Shantou Long Feng Foodstuffs Co., Ltd.; Meizhou Aquatic Products Quick-Frozen Industry Co., Ltd. Shengping Shantou; Shantou Jinhang Aquatic Industry Co., Ltd; Zhangjiang Universal Seafood Co., Ltd.; Zhanjiang Guolian Aquatic Products Co., Ltd. (''Zhanjiang''); ZJ CNF Sea Products Engineering Ltd.; Shanghai Linghai Fisheries Economic and Trading Co., Ltd.; Zhoushan Cereals Oils and

[3] Minh Phu Seafood Corporation (''Minh Phu''); Kim Anh Co., Ltd. (''Kim Anh''); Minh Hai Joint-Stock Seafoods Processing Company (''Seaprodex Minh Hai''); Camau Frozen Seafood Processing Import Export Corporation (''Camimex''); Can Tho Animal Fisheries Product Processing Export Enterprise (''Cafatex''); Cai Doi Vam Seafood Import Export Company (''Cadovimex''); Sao Ta Foods Joint Stock Company (''Fimex VN''); Viet Hai Seafood Company (''Vietnam FishOne''); Kiengiang Seafood Import Export Company (''Kisimex''); Soc Trang Aquatic Products and General Import Export Company (''Stapimex''); Coastal Fisheries Development Corporation (''Cofidec''); Phuong Nam Co., Ltd.; Cuu Long Seaproducts Company (''Cuulong Seapro''); Minh Hai Export Frozen Seafood Processing Joint-Stock Company (''Jostoco''); Can Tho Agriculture and Animal Products Import Export Company (''Cataco''); Nha Trang Fisheries Co.; Nhatrang Seaproduct Company (''Nhatrang Seafoods''); Minh Hai Seaproducts Import and Export Corporation (''Seaprimex''); Thuan Phuoc Seafoods and Trading Corporation; Nhatrang Fisheries Joint Stock Company (''Nhatrang Fishco''); Danang Seaproducts Import Export Company (''Seaprodex Danang''); C.P. Vietnam Livestock; UTXI Aquatic Products Processing Company; Viet Nhan Company; Investment Commerce Fisheries Corporation (''Incomfish''); Vinhloi Import Export Company (''Vimexico''); Bac Lieu Fisheries; Matourimex Ho Chi Minh City Branch (Tourism Material and Equipment Company); Viet Foods Co., Ltd.; Truc An Company; Camranh Seafoods Processing Enterprise PTE (''Camranh Seafoods''); Hai Thuan Comapny; Phu Cuong Comapny; Ngoc Sinh Company; Aquatic Product Trading Company (''APT''); Aquatic Songhuong Campany; Hanoi Seaproducts Import Export Corp. (''Seaprodex Hanoi''); An Giang Fisheries Import-Export Joint Stock Company (''Agifsih'').

[4] Andaman Seafood Company Limited (''Andaman''); Chantaburi Seafoods Limited (''CSC''); Pakfood PLC (''PF''); Thailand Fishery Cold Storage Public Company Limited (''TFC''); Thai Royal Frozen Food Co., Ltd. (''TRF'').

[5] Yihua Aquatic Products Co., Ltd.; Yangjiang City Yelin; Hoitat Quick Frozen Co., Ltd.; Yelin (Hong Kong) Inc.; Zhejiang Pingyang Xinye Aquatic Products Co., Ltd.; Taizhou Zhonghua Industrial Co. Ltd.; Taizhou Lingyang Aquatic Products Co., Ltd.; North Supreme Seafood (Zhejiang) Co. Ltd.; Zhejiang Cereals, Oils and Foodstuffs Import and Export Co., Ltd.; AIS AQUA Foods Inc.; Zhanjiang CNF Sea Products Engineering Ltd.; Beihai Zhengwu Industry Co., Ltd.; Hainan Jiadexin Aquatic Products Co., Ltd.; Yantai Wei-Cheng Food Co., Ltd.; Hainan Fruit Vegetable Food Allocation Co., Ltd.; Zhenjiang Evergreen Aquatic Products Science and Technology Co., Ltd.; Zhanjiang Jebshin Seafood Limited; Power Dekor Group Co., Ltd.; Shanghai Linghai Fisheries Economic and Trading Co., Ltd.; Zhoushan Diciyuan Aquatic Products Co., Ltd.; Zhoushan Guangzhou Aquatic Products Co., Ltd.; Zhoushan Huading Aquatic Products Co., Ltd.; Siahsan Baofa Aquatic Products Co., Ltd.; Shoushan Xi'an Aquatic Products Co., Ltd.; Zhejiang Zhenglong Food Co., Ltd.; Zhoushan Haichang Food Co., Ltd.; Zhejiang Xintianjiu Sea Products Co., Ltd.; Zhoushan Zhenyang Develop Co., Ltd.; Zhoushan Guotai Aquatic Products Co., Ltd.; Zhoushan Jingzhou Aquatic Products Co., Ltd.; Zhoushan Provisions and Oil Food Export and Import Co., Ltd.; Putuo Fahua Aquatic Products Co., Ltd.; Zhoushan International Trade Co., Ltd.; and Shan Tou Long Feng Foodstuff Co.

[6] Andaman Seafood Co., Ltd.; Chanthaburi Seafoods Co., Ltd.; and Thailand Fishery Cold Storage Public Co., Ltd.

Foodstuffs Import and Export Co., Ltd.; Pingyang Xinye Aquatic Products Co., Ltd.; Hainan Fruit Vegetable Food Allocation Co., Ltd.; Zhoushan Diciyuan Aquatic Products Co., Ltd.; Zhejiang Evernew Seafood Co., Ltd.; Taizhou Zhonghuan Industrial Co., Ltd.; Zhejiang Cereals Oils and Foodstuffs Import and Export Co., Ltd.; Zhoushan Putuo Huafa Sea Products Co., Ltd.; Zhoushan Industrial Co., Ltd.; North Supreme Seafood (Zhejiang) Co., Ltd.; Zhoushan Jingzhou Aquatic Foods Co., Ltd.; Zhoushan Haichang Food Co., Ltd.; Zhoushan Zhenyang Developing Co., Ltd.; Zhejiang Taizhou Lingyang Aquatic Products Co., Ltd.; Zhoushan Lizou Fishery Co., Ltd.; Zhoushan Huading Seafood Co., Ltd.; Yantai Wei-Cheng Food Co., Ltd.; Zhoushan Xifeng Aquatic Co., Ltd.; Kaifeng Ocean Sky Industry Co., Ltd.; Beihai Zhengwu Industry Co., Ltd.; Zhejiang Daishan Baofa Aquatic Product Co., Ltd.; Zhejiang Zhenglong Foodstuffs Co., Ltd.; Jinfu Trading Co., Ltd.; Zhoushan Juntai Foods Co., Ltd.; as exporter with Zhoushan Guontai Fisheries and Yelin Enterprise Company. Hong Kong as exporter with (1) Yangjiang City Hoitat Quick Frozen Seafood Co., Ltd.; (2) Fuqing Yihua Aquatic Products Ltd.; and (3) Yelin Frozen Seafood Co. As affiliated suppliers; and *22 producers/exporters*.

On February 10, 2004, the Department received Q&V data corrections from Shantou Yuexing Enterprise Company; Shantou Long Feng Foodstuffs Co., Ltd.; Shantou Sez Xu Hao Fastness Freeze Aquatic Factory Co., Ltd.; and Meizhou Aquatic Products Quick-Frozen Industry Co., Ltd. Shengping Shantou.

On February 12, 2004, the Department sent a supplemental questionnaire to Allied Pacific Group regarding their Q&V information.

On February 13, 2004, the Department received clarification from Allied Pacific Group and Yelin Enterprise Co. Hong Kong, Yangjiang City Yelin Hoitat Quick Frozen Seafood Co., Ltd., Fuqing Yihua Aguatic Products Co., Ltd., and Yelin Frozen Seafood Co. (collectively ''Yelin'') regarding their Q&V information.

On February 17, 2004, Zhanjiang Regal Integrated Marine Resources Co., Ltd.''s submitted Q&V data.

On February 23, 2004, the Department issued its respondent selection memorandum, selecting Allied Pacific Group; Yelin; Shantou Red Garden Foodstuff Co., Ltd. (''Red Garden''); and Zhanjiang Guolian Aquatic Products Co., Ltd. (''ZG'') as mandatory respondents. *See Memorandum to the File from James C. Doyle, Program Manager, to Edward C. Yang, Director of Office IX, Antidumping Duty Investigation of Certain Frozen and Canned Warmwater Shrimp from the People'S Republic of China: Selection of Respondents* (''*Respondent Selection Memo*'').

On March 1, 2004, Meizhou Aquatic Products Quick-Frozen Industry Co., Ltd. (''Meizhou'') submitted a request regarding selection of mandatory and voluntary respondents.

Mandatory Respondents

On February 25, 2004, the Department sent Section A questionnaires to the Respondents.

On March 1, 2004, the Department issued sections C, D, and E of the Department's non-market economy (''NME'') questionnaire to the Respondents.

On March 8, 2004, Allied Pacific Group and Yelin requested an extension of time to respond to Sections A, C, and D of the questionnaire.

On March 10, 2004, the Department changed to March 31, 2004 the deadline for all Respondents to respond to the Section A questionnaires and to April 21, 2004, for Sections C, D, and E.

On April 7, 2004, the Petitioners submitted comments on the Respondents' Section A questionnaire responses.

On April 13, 2004, the Department issued supplemental Section A questionnaires to the Respondents.

On April 14, 2004, Allied Pacific Group requested an extension of the deadline to answer the Section A supplemental questionnaire.

On April 19, 2004, the Department granted an extension to May 4, 2004 to Allied Pacific Group to submit its supplemental Section A questionnaire response.

On April 21, 2004, the Respondents submitted Section C and D responses.

On April 21, 2004, Yelin requested an extension of time to respond to the supplemental Section A questionnaire. The Department extended the deadline until May 4, 2004. On April 22, 2004, ZG and Red Garden requested an extension of time to respond to the supplemental Section A questionnaire. The Department extended the deadline until May 4, 2004.

On May 4, 2004, the Respondents submitted supplemental Section A questionnaires, and the Petitioners submitted comments on the Respondents' Section C and D questionnaire responses.

On May 10, 2004, the Petitioners submitted proposed additional questions for and comments on the Respondents' Section A questionnaire responses.

On May 11, 2004, Red Garden filed a Section E questionnaire response.

On May 17, 2004, the Department sent the Respondents supplemental questionnaires addressing deficiencies in their Section A questionnaire responses.

On May 20, 2004, Allied Pacific Group requested an extension of time to respond to the Department's second Section A supplemental questionnaire.

On May 27, 2004, Yelin requested an extension of time to respond to the supplemental Section A, C, and D questionnaires. On May 27, 2004, Red Garden requested an extension of time to respond to the supplemental Section C and D questionnaires.

On May 27, 2004, the Department extended to June 8, 2004, the deadline for Allied Pacific and Yelin to submit their responses to Sections A, C and D.

On May 28, 2004, the Department sent a letter to Red Garden with a supplemental Section A questionnaire.

On May 28, 2004, ZG requested an extension of time to respond to the supplemental Sections A, C, and D questionnaires.

On May 28, 2004, the Department sent a letter to Red Garden addressing certain deficiencies in their Section A, C, and E questionnaire responses and requesting a correction of such deficiencies.

On June 1, 2004, the Department extended the deadline for ZG to submit its response to the Section A, C, and D supplemental questionnaires until June 8, 2004.

On June 8, 2004, Yelin submitted its second supplemental questionnaire responses.

On June 8, 2004, Mingfeng requested an extension of time to respond to the supplemental Section A questionnaire. On June 9, 2004, the Department granted Mingfeng an extension to June 16, 2004.

On June 9, 2004, Red Garden requested a ten-day extension to respond to its supplemental Section E questionnaire.

On June 10, 2004, the Department received supplemental Section A questionnaire responses from ZG, Yelin, and Allied Pacific Group.

On June 16, 2004, Mingfeng submitted its second supplemental Section A response.

Section A Respondents

As noted above, on February 23, 2003, the Department selected its mandatory respondents. On March 8, 2004, the Department received a request from companies who wished to submit voluntary Section A questionnaires

responses (hereafter known as ''Section A Respondents'').

On March 17, 2004, the Department sent a letter to Seatech Corporation rejecting its Section A questionnaire response.

On March 17, 2004, the Department received Dalian Sea-Rich's and Hainan Golden Spring's Section A questionnaire responses.

On March 29, 2004, the Department received Section A questionnaire responses from: Shantou Ruiyuan; Go-Harvest; Xuwen Hailang; Fuqing Dongwei; Zhanjiang Runhai; Leizhou Zhulian; Shantou Ocean; Chenghai Nichi; Newpro; Shantou Wanya; Gallant; Fuqing Longwei; Shantou/Chaoyang Qiaofeng; Shantou Oceanstar; Shantou Freezing; Shantoy Yuexing; Evergreen; and Dongri Aquatic. On March 30, 2004, Shanghai Taoen submitted a Section A questionnaire response. On March 31, 2004, the Department received Section A questionnaire responses from: Mingfeng; Beihai Zhengwu; Zhoushan Diciyuan; ZJ CNF Sea Products; Zhoushan Putuo Huafa; Yantai Wei-Cheng; Zhanjiang Bobogo; Asian Seafoods; Zhoushan Industrial; Zhejiang Cofiec; Shanghai Linghai; Zhoushan Cereal Oils; Zhejiang Zhenglong; Zhoushan Huading; Zhanjiang Guolian; Yelin Enterprise; Kainfeng Ocean Sky; Hainan Fruit Vegetable Food Allocation; Jinfu Trading; Taizhou Zhonghuan; Universal; Zhejiang Daishan Baofa; Shantou Red Garden; Longfeng; Savvy Seafood; Zhoushan Zhenyang; Zhejiang Taizhou Lingyang; Zhoushan Xifeng; Zhoushan Lizhou; Zhoushan Haiching; Meizhou; Pingyang Xinye; Zhejiang Evernew; Shantou Sez Xuaho; and Allied Pacific Group.

On April 12, 2004, the Department issued a letter to Seatech Corporation requesting correction of deficiencies in its Section A response.

On April 13, 2004, Seatech Corporation requested an extension of time to respond to the Section A questionnaire. On April 14, 2004, the Department rejected Seatech Corporation's submission.

On May 24, 2004, the Department sent supplemental Section A questionnaires to: Beihai Zhengwu; Zhoushan Cereals; Hainan Fruit; Pingyang Xinye; Yantai Wei-Cheng; Zhanjiang Bobogo; Zhoushan Huading; Zuwen Hailang; Zhanjiang Newpro; Dalian; DAP; Shantou Qiafeng; and Zhoushan Lizhou.

On May 26, 2004, the Department sent a letter to ShantouYuexing Enterprise; Savvy Seafood Inc; Shantou Longfeng Foodstuff; Zhanjiang Runhai Foods Co., Ltd.; Zhanjiang Universal Seafoods; Meizhou Aquatic Products Quick-Frozen; and Shantou Sez Xu Hao requesting additional information for certain areas of their questionnaire responses. On May 26, 2004, the Department issued supplemental Section A questionnaires to: Shantou Ruiyuan; Shantou Oceanstar; Fuqing Longwei; Asian (Zhanjiang); Fuqing Dongwei; Hainan Golden; Zhejiang Zhenglong; Zhoushan Putuo; Kaifing Ocean Sky; Shantou Freezing; Shanghai Taoen; and Zhoushan Diciyuan.

On May 26, 2004, the Department received a letter from Beihai Zhengwu Industry Co., Ltd.; Hainan Fruit Vegetable Food Allocation Co., Ltd.; Pingyang Zinye Aquatic Products Co., Ltd.; Yantai Wei-Cheng Food Co., Ltd.; Zhoushan Cereals Oils and Foodstuffs Import and Export Co., Ltd.; Zhoushan Huading Seafood Co., Ltd.; and Zhoushan Lizhou Fishery Co., Ltd. requesting an extension of time for their supplemental Section A responses.

On May 27, 2004, the Department issued supplemental Section A questionnaires to: Shanghai Linghai; Jinfu; Zhoushan; Zhejiang Evernew; Shantou Jinhang; and Leizhou Zhulian.

On May 27, 2004, the Department extended the deadline to June 8, 2004 for: Beihai Zhengwu Industry Co., Ltd.; Hainan Fruit Vegetable Food Allocation Co., Ltd.; Pingyang Zinye Aquatic Products Co., Ltd.; Yantai Wei-Cheng Food Co., Ltd.; Zhoushan Cereals Oils and Foodstuffs Import and Export Co., Ltd.; Zhoushan Huading Seafood Co., Ltd.; and Zhoushan Lizhou Fishery Co., Ltd.

On May 28, 2004, the Department received a letter from Zhejiang Zhenglong Foodstuffs Co., Ltd.; Zhoushan Diciyuan Aquatic Products Co., Ltd; Zhoushan Putuo Huafa Sea Products Co., Ltd.; Jinfu Trading Co, Ltd.; Zhoushan Industrial Co., Ltd.; and Zhejiang Evernew Seafood Co., Ltd. requesting an extension for the supplemental Section A questionnaire response.

On May 28, 2004, the Department received a request from Bobogo, Savvy, Sez Xu, and Asian for an extension of time to submit responses to supplemental Section A questionnaires.

On June 1, 2004, the Department extended the deadline to June 8, 2004, for Bobogo, Savvy, Sez Xu, and Asian to respond to the Section A supplemental questionnaires.

On June 2, 2004, the Department sent letters to: Taizhou Zhonghuan Industrial; Zhanjiang Go-Harvest Aquatic; Shantou Wanya Food Factory; Zhoushan Zhenyang Developing; Shantou Jinyuan District Mingfeng; Zhanjiang Evergreen Aquatic; Chenghai Nichi Lan Foods; Zhejiang Daishan Baofa Aquatic; Zhoushan Xifeng Aquatic; Shantou Ocean Freezing; Zhoushan Haichang Food; Zhejian Cereals, Oils and Foodstuffs; ZJ CNF SEA Products Engineering; and Gallant Ocean (Lianjiang) addressing certain deficiencies in their Section A supplemental responses. On June 2, 2004, Dalian and Hainan Golden requested an extension of time to respond to the supplemental Section A questionnaires. The Department extended the deadline for Dalian until June 8, 2004, and until June 9, 2004 for Hainan Golden.

On June 2, 2004, Shantou Long Feng Foodstuff Co., Ltd. requested an extension of the deadline to respond to the supplemental Section A questionnaire. On June 2, 2004, Meizhou and Universal requested an extension of the deadline to respond to the supplemental Section A questionnaires.

On June 2, 2004, the Department extended the deadline for Zhejiang Zhenglong Foodstuffs Co., Ltd.; Zhoushan Diciyuan Aquatic Products Co., Ltd.; Zhoushan Putuo Huafa Sea Products Co., Ltd.; and Kaifeng Ocean Sky Industry Co., Ltd. until June 9, 2004, and until June 10, 2004, for Shanghai Linghai Fisheries Economic and Trading Co., Ltd.; Jinfu Trading Co., Ltd.; Zhoushan Industrial Co., Ltd.; and Zhejiang Evernew Seafood Co., Ltd.

On June 2, 2004, the Department extended the deadline for Shantou Long Feng Foodstuff Co., Ltd. until June 9, 2004. On June 3, 2004, the Department revised that deadline and determined that no further extensions may be granted.

On June 4, 2004, the Department received a request from ZJ CNF Sea Products Engineering Ltd.; CNF Zhangjiang (Tong Lian) Fisheries Co., Ltd., Zhejian Cereals Oils and Foodstuffs Import and Export Co., Ltd.; Zhejiang Taizhou Lingyang Aquatic Products Co.; Zhoushan Juntai Foods Co., Ltd.; Zhoushan Haichang Food Co., Ltd.; Zhoushan Xifeng Aquatic Co., Ltd.; Taizhou Zhonghuan Industrial Co., Ltd.; Zhoushan Zhenyang Developing Co., Ltd.; and Zhejiang Daishan Baofa Aquatic Product Co., Ltd., to extend their time for responding to the Section A questionnaire. The Department granted an extension for the companies until June 16, 2004.

On June 8, 2004, the Department received a request from Bobogo, Savvy, Sez Xu, and Asian to extend the time to respond to the supplemental Section A questionnaire. On June 8, 2004, the Department received Dalian FTZ Sea-Rick's and Zhangjiang Goulian's

supplemental Section A questionnaires responses.

On June 8, 2004, the Department received Section A questionnaire responses from Hainan Fruit Vegetable Food Allocation Company; Yantai Wei-Cheng; Pingyang Xinye; Beihai Zhengwu Industry Company; Zhoushan Hauding; and Zhoushan Lizhou.

On June 9, 2004, the Department received supplemental Section A questionnaire responses from: Meizhou; Hainan Golden Spring; Long Feng; Kaifeng Ocean Sky Industry Company; Zhoushan Putuo Huafa Sea Products Company; Zhoushan Diciyuan Aquatic Products; and Bobogo.

On June 10, 2004, the Department received supplemental Section A questionnaire responses from: Shantou Xuhao; Zhejiang Evernew; Savvy; Shanghai Linghai; Asian; Jinfu; and Zhoushan.

On June 10, 2004, the Department extended the filing date for responding to supplemental questionnaires until June 9, 2004, for Bobogo and until June 10, 2004, for Savvy, Sez Xu, and Asian.

On June 16, 2004, the Department received supplemental Section A questionnaire responses from: ZJ CNF Sea Products/CNG Zhangjiang Fisheries; Zhejiang Cereals, Oils and Foodstuffs; Zhejiang Daishan Baofa Aquatic Product Company; Zhoushan Haiching; Zhejiang Taizhou Lingyang Aquatic Products; Zhoushan Xifeng; Zhoushan Zhenyang; and Taizou Zhonghuan.

On June 4, 2004, the Section A companies requested a one-day extension of time to respond to supplemental Section A questionnaires. The Department granted the request; however, it stated that no further requests would be granted.

Critical Circumstances Allegation

On May 19, 2004, the Petitioners requested an expedited critical circumstances finding.

On May 26, 2004, the Department sent a letter to Red Garden requesting that it report monthly shipment data.

On May 28, 2004, the Department sent letters to Yelin, Red Garden, Allied Pacific, and Zhanjiang Guolian Aquatic Products stating that they must report their monthly shipment data for 2001, 2002, 2003 and January through May 2004.

On June 14, 2004, Yelin responded to the Petitioners' critical circumstances allegations.

On June 14, 2004, ZG, Ming Feng, Red Garden, and Long Feng submitted critical circumstances information. On June 14, 2004, Allied Pacific responded to the Petitioners' critical circumstances allegation.

On June 17, 2004, Allied Pacific submitted corrections to its June 14, 2004, critical circumstances submission.

Surrogate Country and Factors

On March 12, 2004, the Department solicited comments regarding surrogate country selection from all interested parties.

On March 26, 2004, Allied Pacific Group submitted comments on surrogate country selection.

On April 26, 2004, Allied Pacific Group requested an extension of time to submit surrogate value data.

On May 4, 2004, the Petitioners requested an extension of time to submit surrogate value data. On May 5, 2004 the Department granted an extension from May 7, 2004, to May 21, 2004, for all parties to submit surrogate value data.

On May 21, 2004, the Petitioners and the Respondents submitted surrogate value data.

On June 2, 2004, Yelin and Allied Pacific Group responded to the Petitioners May 21, 2004, surrogate value submission.

On June 4, 2004, the Petitioners submitted comments on the Respondents May 21, 2004, surrogate value submission.

On June 9, 2004, the Department selected the surrogate country.

On June 10, 2004, the Department sent supplemental questionnaires to ZG, Allied Pacific, and Yelin concerning their surrogate value submissions. On June 10, 2004, Yelin, ZG, and Allied Pacific requested an extension of time to answer the Department's surrogate value questionnaire.

On June 14, 2004, the Department extended to June 21, 2004, the deadline for Yelin, ZG, and Allied Pacific to respond to the surrogate value questionnaire.

On June 14, 2004, Allied Pacific requested an extension for the surrogate value supplemental questionnaire response.

On June 15, 2004, the Respondents requested that the Department seek additional surrogate value data. On June 29, 2004, Allied and Yelin submitted comments regarding Petitioners' June 4, 2004, surrogate valuation comments.

Headless, Shell-on ("HLSO") Issue

On May 21, 2004, the Department sent a letter to all interested parties requesting comments on the methodology to employ in making product comparisons, where applicable, and performing margin calculations for purposes of the preliminary determination.

On June 4, 2004, Red Garden submitted comments on HLSO comparison.

On June 8, 2004, Thai I-Mei, and its affiliated reseller, Ocean Duke, submitted comments on the calculation methodology.

On June 10, 2004, Rubicon, UFP, and SEAI submitted comments regarding the Petitioners' submission.

On June 15, 2004, the Petitioners submitted rebuttal comments regarding the use of the HLSO count sizes.

Pre-Preliminary Determination Comments

On June 23, 2004, Petitioners submitted pre-preliminary determination comments. On June 29, 2004, Allied and Yelin submitted rebuttal comments to Petitioners' pre-preliminary comments. On June 30, 2004, Petitioners submitted comments regarding Meizhou's reply to Petitioners' June 23, 2004 comments and Petitioners submitted comments regarding Allied and Yelin's June 29, 2004 comments.

Postponement of Final Determination

Section 735(a) of the Act provides that a final determination may be postponed until no later than 135 days after the date of the publication of the preliminary determination if, in the event of an affirmative preliminary determination, a request for such postponement is made by exporters who account for a significant proportion of exports of the subject merchandise or, in the event of a negative preliminary determination, a request for such postponement is made by the petitioners. Section 351.210(e)(2) of the Department's regulations requires that requests by respondents for postponement of a final determination be accompanied by a request for an extension of the provisional measures from a four-month period to not more than six months.

On June 28, 2004, the PRC Shrimp Coalition requested that, in the event of an affirmative preliminary determination in this investigation, the Department postpone its final determination until 135 days after the publication of the preliminary determination. In addition, on July 1, 2004, Allied, Yelin, and ZG also requested that, in the event of an affirmative preliminary determination in this investigation, the Department postpone its final determination until 135 days after the publication of the preliminary determination. All requests included a request to extend the provisional measures to not more than six months after the publication of the

preliminary determination. Red Garden submitted a request to postpone the final determination, however, Red Garden did not request to extend the provisional measures to not more than six months after the publication of the preliminary determination. Accordingly, because we have made an affirmative preliminary determination and the requesting parties account for a significant proportion of the exports of the subject merchandise, we have postponed the final determination until no later than 135 days after the date of publication of the preliminary determination and are extending the provisional measures accordingly as requested by the PRC Shrimp Coalition, Allied and Yelin. We note that ZG's request is not applicable as ZG received a *de minimis* preliminary determination.

Period of Investigation

The period of investigation (''POI'') is April 1, 2003, through September 30, 2003. This period corresponds to the two most recent fiscal quarters prior to the month of the filing of the Petition (December 31, 2003). *See* 19 CFR 351.204(b)(1).

Scope of Investigation

The scope of this investigations includes certain warmwater shrimp and prawns, whether frozen or canned, wild-caught (ocean harvested) or farm-raised (produced by aquaculture), head-on or head-off, shell-on or peeled, tail-on or tail-off,[7] deveined or not deveined, cooked or raw, or otherwise processed in frozen or canned form.

The frozen or canned warmwater shrimp and prawn products included in the scope of the investigations, regardless of definitions in the Harmonized Tariff Schedule of the United States (''HTSUS''), are products which are processed from warmwater shrimp and prawns through either freezing or canning and which are sold in any count size.

The products described above may be processed from any species of warmwater shrimp and prawns. Warmwater shrimp and prawns are generally classified in, but are not limited to, the *Penaeidae* family. Some examples of the farmed and wild-caught warmwater species include, but are not limited to, whiteleg shrimp (*Penaeus vannemei*), banana prawn (*Penaeus merguiensis*), fleshy prawn (*Penaeus chinensis*), giant river prawn (*Macrobrachium rosenbergii*), giant tiger prawn (*Penaeus monodon*), redspotted shrimp (*Penaeus brasiliensis*), southern brown shrimp (*Penaeus subtilis*), southern pink shrimp (*Penaeus notialis*), southern rough shrimp (*Trachypenaeus curvirostris*), southern white shrimp (*Penaeus schmitti*), blue shrimp (*Penaeus stylirostris*), western white shrimp (*Penaeus occidentalis*), and Indian white prawn (*Penaeus indicus*).

Frozen shrimp and prawns that are packed with marinade, spices or sauce are included in the scope of the investigations. In addition, food preparations, which are not ''prepared meals,'' that contain more than 20 percent by weight of shrimp or prawn are also included in the scope of the investigations.

Excluded from the scope are (1) breaded shrimp[8] and prawns (1605.20.10.20); (2) shrimp and prawns generally classified in the *Pandalidae* family and commonly referred to as coldwater shrimp, in any state of processing; (3) fresh shrimp and prawns whether shell-on or peeled (0306.23.00.20 and 0306.23.00.40); (4) shrimp and prawns in prepared meals (1605.20.05.10); and (5) dried shrimp and prawns.

The products covered by this scope are currently classifiable under the following HTSUS subheadings; 0306.13.00.03, 0306.13.00.06, 0306.13.00.09, 0306.13.00.12, 0306.13.00.15, 0306.13.00.18, 0306.13.00.21, 0306.13.00.24, 0306.13.00.27, 0306.13.00.40, 1605.20.10.10, 1605.20.10.30, and 1605.20.10.40. These HTSUS subheadings are provided for convenience and for CBP purposes only and are not dispositive, but rather the written descriptions of the scope of these investigations is dispositive.

In accordance with the preamble to our regulations (*see Antidumping Duties; Countervailing Duties,* 62 FR 27296, 27323 (May 19, 1997), we set aside a period of time for parties to raise issues regarding product coverage and encouraged all parties to submit comments within 20 calendar days of publication of the *Initiation Notice. See Initiation Notice* 69 FR at 3877.

Throughout the 20 days and beyond, the Department received many comments and submissions regarding a multitude of scope issues, including: (1) Fresh (never frozen) shrimp, (2) Ocean Duke's seafood mix, (3) salad shrimp sold in counts of 250 pieces or higher, (4) Macrobrachium rosenbergii, organic shrimp, (5) peeled shrimp used in breading, (6) dusted shrimp and (7) battered shrimp. On May 21, 2004, the Department determined that the scope of these investigations remains unchanged, as certain frozen and canned warmwater shrimp, without the addition of fresh (never frozen) shrimp. *See Memorandum from Jeffrey A. May, Deputy Assistant Secretary for Import Administration, AD/CVD Enforcement, Group III and Joseph A. Spetrini, Deputy Assistant Secretary for Import Administration, AD/CVD Enforcement, Group I to James J. Jochum, Assistant Secretary for Import Administration Regarding Antidumping Investigations on Certain Frozen and Canned Warmwater Shrimp from Brazil, Ecuador, India, the Socialist Republic of Vietnam, Thailand, and the Socialist Republic of Vietnam: Scope Determination Regarding Fresh (Never Frozen) Shrimp* (''*Fresh Shrimp Memo*''), dated May 21, 2004.

On July 2, 2004, the Department made scope determinations with respect to Ocean Duke's seafood mix, salad shrimp sold in counts of 250 pieces or higher, *Macrobrachium rosenbergii,* organic shrimp and peeled shrimp used in breading. *See Memorandum from Edward C. Yang, Vietnam/NME Unit Coordinator, Import Administration to Jeffrey A. May, Deputy Assistant Secretary for Import Administration Antidumping Investigation on Certain Frozen and Canned Warmwater Shrimp from Brazil, Ecuador, India, Thailand, the Socialist Republic of Vietnam and the Socialist Republic of Vietnam: Scope Clarification on Ocean Duke's Seafood Mix, Salad Shrimp Sold in Counts of 250 Pieces or Higher, Macrobrachium rosenbergii, Organic Shrimp and Peeled Shrimp Used in Breading* (''*Scope Memo*''), dated July 2, 2004. Based on the information presented by interested parties, the Department determines that Ocean Duke's seafood mix is excluded from the scope of this investigation; however, salad shrimp sold in counts of 250 pieces or higher, *Macrobrachium rosenbergii,* organic shrimp and peeled shrimp used in breading are included within the scope of this investigation. *See Scope Memo* at 33.

Additionally, on July 2, 2004, the Department made a scope determination with respect to dusted shrimp and

[7] ''Tails'' in this context means the tail fan, which includes the telson and the uropods.

[8] Pursuant to our scope determination on battered shrimp, we find that breaded shrimp includes battered shrimp as discussed below. *See Memorandum from Edward C. Yang, Vietnam/NME Unit Coordinator, Import Administration to Jeffrey A. May, Deputy Assistant Secretary for Import Administration Antidumping Investigation on Certain Frozen and Canned Warmwater Shrimp from Brazil, Ecuador, India, Thailand, the Socialist Republic of Vietnam and the Socialist Republic of Vietnam: Scope Clarification on Dusted Shrimp and Battered Shrimp (''Dusted/Battered Scope Memo''),* dated July 2, 2004.

battered shrimp. *See Dusted/Battered Scope Memo.* Based on the information presented by interested parties, the Department preliminarily finds that while substantial evidence exists to consider battered shrimp to fall within the meaning of the breaded shrimp exclusion identified in the scope of these proceedings, there is insufficient evidence to consider that shrimp which has been dusted falls within the meaning of ''breaded'' shrimp. However, there is sufficient evidence for the Department to be prepared to exclude this merchandise from the scope of the order provided an appropriate description can be developed. *See Dusted/Battered Scope Memo* at 18. To that end, along with the previously solicited comments regarding breaded and battered shrimp, the Department solicits comments from interested parties which enumerate and describe a clear, administrable definition of dusted shrimp. The Department considers these comments would be helpful in its evaluation of the disposition of the status of dusted shrimp. *See Dusted/ Battered Scope Memo* at 23.

Selection of Respondents

Section 777A(c)(1) of the Act directs the Department to calculate individual dumping margins for each known exporter and producer of the subject merchandise. Section 777A(c)(2) of the Act provides the Department discretion, when faced with a large number of exporters/producers, however, to limit its examination to a reasonable number of such companies if it is not practicable to examine all companies. Where it is not practicable to examine all known producers/exporters of subject merchandise, this provision permits the Department to investigate either (1) A sample of exporters, producers, or types of products that is statistically valid based on the information available to the Department at the time of selection or (2) exporters/producers accounting for the largest volume of the merchandise under investigation that can reasonably be examined. After considering the complexities in this proceeding and the resources, the Department determined that it was not practicable in this investigation to examine all known producers/exporters of subject merchandise. *See Respondent Selection Memo* at 2. Instead, we limited our examination to the four exporters and producers accounting for the largest volume of the subject merchandise pursuant to section 777A(c)(2)(B) of the Act. The four Chinese producers/ exporters (Allied, ZG, Red Garden and Yelin) accounted for a significant percentage of all exports of the subject merchandise from the PRC during the POI and were selected as mandatory respondents. *See Respondent Selection Memo* at 4.

Non Market Economy Country

For purposes of initiation, the Petitioners submitted LTFV analyses for the PRC as a non-market economy. *See Initiation Notice,* 69 FR at 3880. In every case conducted by the Department involving the PRC, the PRC has been treated as a nonmarket-economy (''NME'') country. In accordance with section 771(18)(C)(i) of the Act, any determination that a foreign country is an NME country shall remain in effect until revoked by the administering authority. *See also Tapered Roller Bearings and Parts Thereof, Finished and Unfinished, From the People's Republic of China: Preliminary Results 2001–2002 Administrative Review and Partial Rescission of Review,* 68 FR 7500 (February 14, 2003). When the Department is investigating imports from an NME, section 773(c)(1) of the Act directs us to base the normal value on the NME producer's factors of production, valued in an economically comparable market economy that is a significant producer of comparable merchandise. The sources of individual factor prices are discussed under the ''Factor Valuations'' section, below.

Surrogate Country

When the Department is investigating imports from an NME country, section 773(c)(1) of the Act directs it to base normal value (''NV''), in most circumstances, on the NME producer's factors of production, valued in a surrogate market-economy country or countries considered to be appropriate by the Department. In accordance with section 773(c)(4) of the Act, in valuing the factors of production, the Department shall utilize, to the extent possible, the prices or costs of factors of production in one or more market-economy countries that are at a level of economic development comparable to that of the NME country and are significant producers of comparable merchandise. The sources of the surrogate values we have used in this investigation are discussed under the NV section below.

The Department determined that India, Indonesia, Sri Lanka, the Phillippines, Ecuador and Egypt are countries comparable to the PRC in terms of economic development. *See Memorandum from Ron Lorentzen to James Doyle: Antidumping Duty Investigation onCertain Frozen and Canned Warmwater Shrimp from the People's Republic of China,* dated March 10, 2004. We select an appropriate surrogate country based on the availability and reliability of data from the countries. *See Department Policy Bulletin No. 04.1: Non-Market Economy Surrogate Country Selection Process (''Policy Bulletin''),* dated March 1, 2004. In this case, we have found that India is a significant producer of comparable merchandise, frozen and canned warmwater shrimp, and is at a similar level of economic development pursuant to 733(c)(4) of the Act. *See Surrogate Country Memo* at 7. Since our issuance of the Surrogate Country Memo, we have not received comments from interested parties regarding this issue.

Separate Rates

In proceedings involving NME countries, the Department has a rebuttable presumption that all companies within the country are subject to government control and thus should be assessed a single antidumping duty rate. It is the Department's policy to assign all exporters of merchandise subject to investigation in an NME country this single rate unless an exporter can demonstrate that it is sufficiently independent so as to be entitled to a separate rate. The four mandatory respondents and the Section A respondents have provided company-specific information and each has stated that it met the standards for the assignment of a separate rate.

We have considered whether each PRC company is eligible for a separate rate. The Department's separate-rate test is not concerned, in general, with macroeconomic/border-type controls, *e.g.*, export licenses, quotas, and minimum export prices, particularly if these controls are imposed to prevent dumping. The test focuses, rather, on controls over the investment, pricing, and output decision-making process at the individual firm level. *See Certain Cut-to-Length Carbon Steel Plate from Ukraine: Final Determination of Sales at Less than Fair Value, 62 FR 61754, 61757 (November 19, 1997), and Tapered Roller Bearings and Parts Thereof, Finished and Unfinished, from the People's Republic of China: Final Results of Antidumping Duty Administrative Review,* 62 FR 61276, 61279 (November 17, 1997).

To establish whether a firm is sufficiently independent from government control of its export activities to be entitled to a separate rate, the Department analyzes each entity exporting the subject merchandise under a test arising from the *Notice of Final Determination of Sales at Less Than Fair Value: Sparklers*

from the People's Republic of China, 56 FR 20588 (May 6, 1991) (''*Sparklers*''), as amplified by *Notice of Final Determination of Sales at Less Than Fair Value: Silicon Carbide from the People's Republic of China,* 59 FR 22585 (May 2,1994) (''Silicon Carbide''). In accordance with the separate-rates criteria, the Department assigns separate rates in NME cases only if respondents can demonstrate the absence of both *de jure* and *de facto* governmental control over export activities.

1. Absence of De Jure Control

The Department considers the following *de jure* criteria in determining whether an individual company may be granted a separate rate: (1) An absence of restrictive stipulations associated with an individual exporter's business and export licenses; (2) any legislative enactments decentralizing control of companies; and (3) other formal measures by the government decentralizing control of companies. *See Sparklers,* 56 FR at 20589.

Our analysis shows that the evidence on the record supports a preliminary finding of *de jure* absence of governmental control based on the following: (1) An absence of restrictive stipulations associated with the individual exporter's business and export licenses; (2) the applicable legislative enactments decentralizing control of the companies; and (3) any other formal measures by the government decentralizing control of companies. *See Memorandum to Edward C. Yang, Director, Non-Market Economy Unit, Import Administration, from Julia Hancock and Hallie Zink, Case Analysts through James C. Doyle, Program Manager, Certain Frozen and Canned Warmwater Shrimp from the People's Republic of China: Separate Rates for Producers/Exporters that Submitted Questionnaire Responses,* dated July 2, 2004 (''*Separate Rates Memo*'').

2. Absence of De Facto Control

Typically the Department considers four factors in evaluating whether each respondent is subject to *de facto* governmental control of its export functions: (1) Whether the export prices are set by or are subject to the approval of a governmental agency; (2) whether the respondent has authority to negotiate and sign contracts and other agreements; (3) whether the respondent has autonomy from the government in making decisions regarding the selection of management; and (4) whether the respondent retains the proceeds of its export sales and makes independent decisions regarding disposition of profits or financing of losses. *See Silicon Carbide*, 59 FR at 22586–87; *see also Notice of Final Determination of Sales at Less Than Fair Value: Furfuryl Alcohol From the People's Republic of China*, 60 FR 22544, 22545 (May 8, 1995). The Department has determined that an analysis of *de facto* control is critical in determining whether respondents are, in fact, subject to a degree of governmental control which would preclude the Department from assigning separate rates.

We determine that, for the mandatory respondents and certain Section A respondents, the evidence on the record supports a preliminary finding of *de facto* absence of governmental control based on record statements and supporting documentation showing the following: (1) Each exporter sets its own export prices independent of the government and without the approval of a government authority; (2) each exporter retains the proceeds from its sales and makes independent decisions regarding disposition of profits or financing of losses; (3) each exporter has the authority to negotiate and sign contracts and other agreements; and (4) each exporter has autonomy from the government regarding the selection of management.

Therefore, the evidence placed on the record of this investigation by the mandatory respondents and certain Section A respondents demonstrates an absence of government control, both in law and in fact, with respect to each of the exporter's exports of the merchandise under investigation, in accordance with the criteria identified in *Sparklers* and *Silicon Carbide.* As a result, for the purposes of this preliminary determination, we have granted separate, company-specific rates to the mandatory respondents and certain Section A respondents which shipped certain frozen and canned warmwater shrimp to the United States during the POI. For a full discussion of this issue and list of Section A respondents, please see the *Separate-Rates Memo.*

PRC-Wide Rate

The Department has data that indicates there are more known exporters of the certain frozen and canned warmwater shrimp from the PRC during the POI that responded to our quantity and value (''Q&V'') questionnaire. *See Respondent Selection Memo.* Although we issued the Q&V questionnaire to nine known Chinese exporters of subject merchandise (as identified in the petition), we received 57 Q&V questionnaire responses, including those from the four mandatory respondents. Also, on January 29, 2004, we issued a Section A questionnaire to the Government of the PRC (*i.e.*, Ministry of Commerce). Although all known exporters were given an opportunity to provide information showing they qualify for separate rates, not all of these other exporters provided a response to either the Department's Q&V questionnaire or its Section A questionnaire. Further, the Government of the PRC did not respond to the Department's questionnaire. Therefore, the Department determines preliminarily that there were exports of the merchandise under investigation from other PRC producers/exporters, which are treated as part of the countrywide entity.

Section 776(a)(2) of the Act provides that, if an interested party: (A) withholds information that has been requested by the Department; (B) fails to provide such information in a timely manner or in the form or manner requested, subject to subsections 782(c)(1) and (e) of the Act; (C) significantly impedes a determination under the antidumping statute; or (D) provides such information but the information cannot be verified, the Department shall, subject to subsection 782(d) of the Act, use facts otherwise available in reaching the applicable determination.

Pursuant to section 782(e) of the Act, the Department shall not decline to consider submitted information if all of the following requirements are met: (1) The information is submitted by the established deadline; (2) the information can be verified; (3) the information is not so incomplete that it cannot serve as a reliable basis for reaching the applicable determination; (4) the interested party has demonstrated that it acted to the best of its ability; and (5) the information can be used without undue difficulties.

Information on the record of this investigation indicates that there are numerous producers/exporters of the certain frozen and canned warmwater shrimp in the PRC. As described above, all exporters were given the opportunity to respond to the Department's questionnaire. Based upon our knowledge of the volume of imports of subject merchandise from the PRC and the fact that information indicates that the responding companies did not account for all imports into the United States from the PRC, we have preliminary determined that certain PRC exporters of certain frozen and canned warmwater shrimp failed to respond to our questionnaires. As a result, use of adverse facts available

(''AFA'') pursuant to section 776(a)(2)(A) of the Act is appropriate. Additionally, in this case, the Government of the PRC did not respond to the Department's questionnaire, thereby necessitating the use of AFA to determine the PRC-wide rate. *See e.g., Notice of Preliminary Determination of Sales at Less Than Fair Value, Affirmative Preliminary Determination of Critical Circumstances and Postponement of Final Determination: Certain Frozen Fish Fillets from the Socialist Republic of Vietnam*, 68 FR 4986 (January 31, 2003).

Section 776(b) of the Act provides that, in selecting from among the facts available, the Department may employ adverse inferences if an interested party fails to cooperate by not acting to the best of its ability to comply with requests for information. *See Notice of Final Determination of Sales at Less Than Fair Value: Certain Cold-Rolled Flat-Rolled Carbon-Quality Steel Products from the Russian Federation*, 65 FR 5510, 5518 (February 4, 2000), *See also* ''Statement of Administrative Action'' accompanying the URAA, H.R. Rep. No. 103–316, 870 (1994) (''SAA''). We find that, because the PRC-wide entity and certain producers/exporters did not respond at all to our request for information, they have failed to cooperate to the best of their ability. Therefore, the Department preliminarily finds that, in selecting from among the facts available, an adverse inference is appropriate.

In accordance with our standard practice, as AFA, we have assigned the PRC-wide entity the higher of the highest margin stated in the notice of initiation (*i.e.*, the recalculated petition margin) or the highest margin calculated for any respondent in this investigation. *See e.g., Notice of Final Determination of Sales at Less Than Fair Value: Certain Cold-Rolled Carbon Quality Steel Products from the People's Republic of China* 65 FR 34660 (May 31, 2000) and accompanying Issues and Decision Memorandum, at Comment 1. In this case, we have applied a rate of 112.81 percent, the highest rate calculated in the *Initiation Notice* of the investigation from information provided in the petition. *See e.g., Notice of Preliminary Determination of Sales at Less Than Fair Value: Stainless Steel Wire Rod From Germany*, 63 FR 10847 (March 5, 1998).

Corroboration of Information

Section 776(b) of the Act authorizes the Department to use AFA information derived from the petition, the final determination from the LTFV investigation, a previous administrative review, or any other information placed on the record.

Section 776(c) of the Act provides that, when the Department relies on secondary information rather than on information obtained in the course of an investigation as facts available, it must, to the extent practicable, corroborate that information from independent sources reasonably at its disposal. Secondary information is described in the SAA as ''information derived from the petition that gave rise to the investigation or review, the final determination concerning subject merchandise, or any previous review under section 751 concerning the subject merchandise.'' *See* SAA at 870. The SAA provides that to ''corroborate'' means simply that the Department will satisfy itself that the secondary information to be used has probative value. *Id.* The SAA also states that independent sources used to corroborate may include, for example, published price lists, official import statistics and customs data, and information obtained from interested parties during the particular investigation. *Id.* As explained in *Tapered Roller Bearings and Parts Thereof, Finished and Unfinished, from Japan, and Tapered Roller Bearings, Four Inches or Less in Outside Diameter, and Components Thereof, from Japan; Preliminary Results of Antidumping Duty Administrative Reviews and Partial Termination of Administrative Reviews*, 61 FR 57391, 57392 (November 6, 1996) (''*Japan Notice*''), to corroborate secondary information, the Department will, to the extent practicable, examine the reliability and relevance of the information used.

The Petitioners methodology for calculating the export price and NV in the petition is discussed in the initiation notice. *See Initiation Notice*, 69 FR at 3876. To corroborate the AFA margin of 112.81 percent, we compared that margin to the margin we found for the largest exporting respondent.

As discussed in the Memorandum to the File regarding the corroboration of the AFA rate, dated June 17, 2004, we found that the margin of 112.81 percent has probative value. *See Memorandum to the File from Alex Villanueva, Senior Case Analyst through James C. Doyle, Program Manager and Edward C. Yang, Director, NME Unit, Preliminary Determination in the Investigation of Certain Frozen and Canned Warmwater Shrimp from the People's Republic of China, Corroboration Memorandum* (''*Corroboration Memo*''), dated July 2, 2004. Accordingly, we find that the lowest margin, based on the petition information as described above, of 112.81 percent is corroborated within the meaning of section 776(c) of the Act.

Consequently, we are applying a single antidumping rate—the PRC-wide rate—to producers/exporters that failed to respond to the Q&V questionnaire or Section A questionnaire, as well as to exporters which did not demonstrate entitlement to a separate rate. *See e.g., Final Determination of Sales at Less Than Fair Value: Synthetic Indigo from the People's Republic of China*, 65 FR 25706, 25707 (May 3, 2000). The PRC-wide rate applies to all entries of the merchandise under investigation except for entries from the four mandatory respondents and certain Section A respondents.

Because this is a preliminary determination, the Department will consider all margins on the record at the time of the final determination for the purpose of determining the most appropriate final PRC-wide margin. *See Notice of Preliminary Determination of Sales at Less Than Fair Value: Saccharin from the People's Republic of China*, 67 FR 79049, 79054 (December 27, 2002).

Margins for Section A Respondents

The exporters which submitted responses to Section A of the Department's antidumping questionnaire and had sales of the subject merchandise to the United States during the POI but were not selected as mandatory respondents in this investigation (Section A respondents) have applied for separate rates and provided information for the Department to consider for this purpose. Therefore, for the Section A respondents which provided sufficient evidence that they are separate from the countrywide entity and answered other questions in section A of the questionnaire, we have established a weighted-average margin based on the rates we have calculated for the four mandatory respondents, excluding any rates that are zero, *de minimis*, or based entirely on adverse facts available. Companies receiving this rate are identified by name in the ''Suspension of Liquidation'' section of this notice.

Date of Sale

Section 351.401(i) of the Department's regulations state that ''in identifying the date of sale of the subject merchandise or foreign like product, the Secretary normally will use the date of invoice, as recorded in the exporter or producer's records kept in the normal course of business.'' After examining the sales documentation placed on the record by the respondents, we preliminarily determine that invoice date is the most

appropriate date of sale for three of the four respondents. We made this determination because, at this time, there is not enough evidence on the record to determine that the contracts used by the respondents establish the material terms of sale to the extent required by our regulations in order to rebut the presumption that invoice date is the proper date of sale. *See Saccharin from China*, 67 FR at 79054.

With respect to the respondent ZG, we preliminarily determine that the contract date and/or purchase order dates are the most appropriate dates of sale because the terms of sale do not change after the contract is signed or the purchase order is received. ZG also stated that for some customers the contract date is not available because repeat customers do not use contracts, but choose to conduct their transactions using only a purchase order. ZG explained that both the contract date and purchase order date are generated prior to the issuance of the invoice. ZG also stated that the invoice is not issued until the product is shipped. Furthermore, ZG stated that the terms of sale do not change after the contract is signed or the purchase order is received. Section 351.401(i) of the Department's regulations state that ''the Secretary may use a date other than the date of invoice if the Secretary is satisfied that a different date on which the exporter or producer established the materials terms of sale.'' Given the unique business operations by ZG to set the material terms of sale at the contract date or in the absence of a contract date, the purchase order date, we have preliminarily determined that the contract date or purchase order date is the most appropriate date to use ZG's date of sale. For a detailed discussion of the company-specific analysis memorandum.

Appropriate Basis for Comparison

On May 24, 2004, the Department requested comments from interested parties on whether product comparisons and margin calculations in this investigation should be performed based on data provided on an ''as sold'' basis or whether those comparisons and calculations should be performed on data converted to a headless, shell-on (''HLSO'') basis.

On June 4, 2004, the Department received comments on HLSO comparison from Shantou Red Garden Foodstuff Co., Ltd. (''Red Garden''). On June 7, 2004, and June 10, 2004, the Department received comments from the Petitioners in support of subject merchandise on an HLSO basis. Red Garden argues that by valuing shrimp products on an HLSO basis, when a significant quantity of such products are not sold on an HLSO basis, effectively requires converting shrimp products from a non-HLSO basis to an HLSO basis by employing conversion coefficients to the quantities and values of the subject merchandise. This conversion method alters the count-sizes and prices of shrimp in many instances where count-size and prices were not sold on an HLSO basis, but were subsequently converted for this investigation to an HLSO basis. Several other comments were submitted by interested parties both in support of and in opposition to calculating a margin on an HLSO basis, although those comments pertained to the Department's market economy analysis of product comparisons in the U.S., home, and/or third country markets. Since the market economy methodology of product comparisons does not apply in NME investigations, those comments will be addressed in the preliminary determinations for the market economy countries subject to this investigation.

Section 773(c)(1)(B) of the Act requires that the Department value the factors of production that a respondent uses to produce the subject merchandise. The Department notes that it will be less accurate to rely on HLSO quantities sold and HLSO values of the subject merchandise, rather than relying on actual quantities sold and actual values of the subject merchandise.

The Petitioners argue that using an HLSO conversion method will give a consistent basis for weight-averaging the unit margins in the calculation of the overall weight-averaged margin. To achieve the consistent measuring basis, the Petitioners' suggest converting actual quantities and values of subject merchandise sold by HLSO coefficients to standardize the different types of subject merchandise sold.

The Department examined the Petitioners' suggested methodology, which seeks to achieve a consistent measuring standard by adjusting subject merchandise product values and yields on a HLSO basis. However, the Department's current NME methodology for calculating margins also achieves consistency through valuing subject merchandise on an actual, as sold basis. The Department notes that when calculating the estimated weighted-average margin, the Department totals the margins for all CONNUMs to derive the total dumping margin of the company. The values generated from totaling the margins and sales values for all CONNUMs do not require converting quantities to the same basis.

The Petitioners also argue that the CONNUM assignment should be altered to place more weight on the species of subject merchandise, as it is the species type that is a predominant factor in determining shrimp prices. However, the Department notes that the placement of the shrimp species category in the order of CONNUM assignments does not increase or decrease the weight given to that category in nonmarket economy margin calculations. In the NME margin calculation methodology, the CONNUM hierarchy is inconsequential to the normal value calculation, because each CONNUM characteristic is afforded equal weight when calculating CONNUM-specific normal values. However, as this issue is relevant to the market economy margin calculation methodology, this issue will be addressed by the preliminary determinations of the market economy countries subject to this investigation.

Fair Value Comparisons

To determine whether sales of certain frozen and canned warmwater shrimp to the United States of the four mandatory respondents were made at less than fair value, we compared export price (''EP'') or constructed export price (''CEP'') to NV, as described in the ''U.S. Price'' and ''Normal Value'' sections of this notice.

U.S. Price

In accordance with section 772(a) of the Act, we used EP for the four mandatory respondents, because the subject merchandise was first sold (or agreed to be sold) before the date of importation by the producer or exporter of the subject merchandise outside of the United States to an unaffiliated purchaser in the United States or to an unaffiliated purchaser for exportation to the United States, and because the use of constructed export price was not otherwise indicated. In accordance with section 772(b) of the Act, we used CEP for Yelin because the subject merchandise was sold in the United States after the date of importation by a U.S. seller affiliated with the producer.

We calculated EP and CEP based on the packed F.O.B., C.I.F., or delivered price to unaffiliated purchasers in, or for exportation to, the United States. We made deductions, as appropriate, for any movement expenses (*e.g.,* foreign inland freight from the plant to the port of exportation, domestic brokerage, ocean freight, marine insurance, U.S. brokerage, and inland freight from warehouse to unaffiliated U.S. customer) in accordance with section 772(c)(2)(A) of the Act. For a detailed description of all adjustments, see the

company-specific analysis memorandum dated July 2, 2004.

In accordance with section 772(d)(1) of the Act and the SAA at 823–824, we calculated the CEP by deducting selling expenses associated with economic activities occurring in the United States, which includes credit and indirect selling expenses. We compared NV to weighted-average EPs and CEPs, in accordance with section 777A(d) of the Act. Where appropriate, in accordance with sections 772(d)(3) and 772(f) of the Act, we deducted CEP profit. For a discussion of the surrogate values used for the movements deductions, see the *Factor Valuation Memo* at Exhibits 6–9.

Respondent Yelin indicated that it purchased subject merchandise from a number of unaffiliated suppliers. Yelin stated that these unaffiliated suppliers ''had constructive knowledge of the final destination of the merchandise.'' *See* Yelin's May 4, 2004, submission at 1. For these unaffiliated suppliers, Yelin stated that ''the merchandise was purchased by and sold to HK Yelin in convertible currency ($US), was marked in a manner consistent with goods destined for the United States, was packaged and sold to HK Yelin in condition ready for shipment to and resale in the U.S. market, and was not processed by any of the Yelin companies prior to shipment or after importation.'' *See* Yelin's May 4, 2004, submission at 2. Yelin provided evidence that demonstrates that purchase orders, commercial invoices and certificates of origin all indicate an ultimate delivery to the United States. *See* Yelin's May 4, 2004, submission at Exhibit 2–4. In *Wonderful Chemical Indus., Ltd. v. United States,* F.Supp. 2d 1273 (CIT 2003), the Court of International Trade affirmed the manner in which the Department administered this ''knowledge test'' in *Synthetic Indigo from the People's Republic of China, Final Determination of Sales at Less than Fair Value,* 65 FR 25706 (May 3, 2000). The CIT also summarized the Department's application of the ''knew or had reason to know'' test in NME cases. The Department also applied this ''knowledge test'' and excluded sales made by a party having such knowledge from the margin calculation in *Canned Pineapple Fruit From Thailand, Notice of Final Results of Antidumping Duty Administrative Review,* 63 FR 7392 (February 13, 1998), in *Dynamic Random Access Memory Semiconductors of One Megabit or Above from the Republic of Korea, Final Results of Antidumping Duty Administrative Review and Determination Not to Revoke the Order in Part,* 64 FR 69694 (December 14, 1999), and in *Certain Headwear from the People's Republic of China, Final Determination of Sales at Less than Fair Value,* 54 FR 11983 (March 23, 1989). Consequently, based on the record evidence, we did not request the factors of production from these unaffiliated suppliers for these U.S. sales and have not included these sales in our margin calculations as they are EP sales of the unaffiliated suppliers to a foreign market.

In addition, in response to a supplemental questionnaire, Shantou Yelin indicated that for this one U.S. sale it did not take title of the subject merchandise and the subject merchandise was delivered/released directly to Yelin prior to U.S. exportation. In addition, as with other purchases from unaffiliated manufacturers, Yelin purchased in ''U.S. dollars and references U.S. brand names, U.S. packaging sizes and types; the retail packaging prepared by the supplier contains FDA labeling requirements and the name of the ultimate U.S. distributors; microbial reports are prepared by the supplier of U.S. entry and FDA purposes; and country of origin certifications and freight documentation indicate a U.S. destination for these sales.'' *See* Yelin's June 8, 2004, Submission at 30. In addition, the unaffiliated supplier stated and provided evidence that it had constructive knowledge of the final destination of the merchandise. *See* Yelin's June 8, 2004, Submission at 6–10. ''The merchandise was purchased by and sold to HK Yelin in convertible currency ($US), was marked in a manner consistent with goods destined for the U.S., was sold to HK Yelin in condition ready for shipment to and resale in the U.S. market, and was not further processed by any of the Yelin companies in condition ready for shipment to and resale in the U.S. market, and was not further processed by any of the Yelin companies prior to shipment or after importation.'' *See* Yelin's April 21, 2004, Submission at 37. Consequently, based on the record evidence, we did not request the factors of production from the unaffiliated supplier for this one U.S. sale and have not included this sale in our margin calculations as it is an EP sale of the unaffiliated supplier to a foreign market. *See* Yelin's May 4, 2004, submission at Exhibit 1.

Red Garden reported that all sales of subject merchandise to the United States during the POI were sold to Red Chamber Co. (''Red Chamber''), and that Red Chamber is affiliated with Red Garden. Section 772(b) of the Act states that the Department must base its CEP calculations on the price at which the subject merchandise is first sold in the United States to a purchaser not affiliated with the producer or exporter, as adjusted. Because Red Garden considers Red Chamber to be affiliated, Red Garden argues that the Department should use Red Chamber's downstream sales to its unaffiliated customers in the United States for Red Garden's CEP sales of subject merchandise.

Section 771(33) of the Act states that the Department considers the following as affiliated: (A) Members of a family, including brothers and sisters (whether by the whole or half blood), spouse, ancestors, and lineal descendants; (B) any officer or director of an organization and such organization; (C) partners; (D) employer and employee; (E) any person directly or indirectly owning, controlling, or holding with power to vote, 5 percent or more of the outstanding voting stock or shares of any organization and such organization; (F) two or more persons directly or indirectly controlling, controlled by, or under common control with, any person; and (G) any person who controls any other person and such other person. For purposes of affiliation, section 771(33) states that a person shall be considered to control another person if the person is legally or operationally in a position to exercise restraint or direction over the other person. In order to find affiliation between companies, the Department must find that at least one of the criteria listed above is applicable to the respondents.

Red Garden believes it is affiliated with Red Chamber because 100% of Red Garden's sales of subject merchandise during the POI were to Red Chamber. However, Red Garden also indicated that no equity relationship exists between Red Garden and Red Chamber. *See* March 31, 2004, Section A response at A–2. In addition, there is no indication that any form of affiliation as defined under sections 771(33)(A) through (E) of the Act exists between Red Garden and Red Chamber. Thus, any affiliation between Red Garden and Red Chamber would only be determined under section 771(33)(F) (two or more persons directly or indirectly controlling, controlled by, or under common control with, any person) or (G) (any person who controls any other person and such other person).

When, as in this case, the Department is faced with a commercial relationship between the foreign producer and a U.S. entity, and there is a question as to whether the producer has legal or operational control over the U.S. entity, or vice versa, the Department will examine the facts and circumstances to

determine whether the parties are affiliated. The Department's affiliation analysis is based on the facts and circumstances of a given relationship. As the Department has noted, ''the analysis of whether a relationship constitutes an agency is case-specific and can be quite complex; there is no bright line test.'' *See Notice of Final Determination of Sales at Less Than Fair Value: Engineered Process Gas Turbo-Compressor Systems, Whether Assembled or Unassembled, and Whether Complete or Incomplete, from Japan,* 62 FR 24403 (May 5, 1997) (''*Turbo-Compressors from Japan*''). It is the Department's normal practice to find a principal-agent relationship when one is established by a written agreement as in *Notice of Preliminary Determination of Sales at Less Than Fair Value: Silicomanganese from Kazakhstan,* 66 FR 56639 (November 9, 2002) (''*Silicomanganese from Kazakhstan*''), and that the existence of such a formal arrangement is a sufficient basis to find affiliation. *See Silicomanganese from Kazakhstan.* The Department considers the ''control of the principal over its agent'' to be ''the hallmark of an agency relationship.'' In prior cases, the Department has found that a principal/agent relationship is characterized by control because ''{t}he agent may act only to the extent that its actions are consistent with the authority granted by the principal.'' *See Notice of Final Determination of Sales at Less Than Fair Value: Engineered Process Gas Turbo-Compressor Systems, Whether Assembled or Unassembled, and Whether Complete or Incomplete, from Japan,* 62 FR 24403, 24407 (May 5, 1997) (''*Turbo-Compressors from Japan*''). Even in the absence of a formal agreement, when the Department finds evidence that the foreign producer has the potential to control pricing and/or the terms of sale through the agent to the end-customer, it will find that an affiliation exists with the agent. *See Notice of Final Results of Antidumping Duty Administrative Review: Furfuryl Alcohol from South Africa,* 62 FR 61084 (November 14, 1997). The Department also considers who bears the risk of loss as probative of whether one company is acting as an agent for another. However, this is not a formalistic exercise. The Department only considers the existence of a principal/agent relationship (actual or effective) to the extent that it is probative of Commerce's fundamental inquiry: is one party in a position to exercise legal or operational restraint or direction over the other?

In this case, we note that while Red Garden may sell 100% of its subject merchandise to Red Chamber, Red Chamber purchases subject merchandise from multiple suppliers in the PRC in addition to Red Garden. *See* Red Chamber's May 4, 2004, response at Exhibit B–1. Thus, Red Chamber does not exclusively purchase subject merchandise from Red Garden. Nor have they argued that Red Chamber has controlled Red Garden's production or sales decisions, or vice versa. Red Chamber and Red Garden have not provided evidence of an agreement indicating that Red Chamber is Red Garden's agent in the United States. Red Garden and Red Chamber also have not argued that Red Chamber bears the risk of loss prior to shipment from Red Garden, other than through normal CNF terms of sale, or that Red Garden bears any risks subsequent to delivery to Red Chamber.

Based on the record evidence, the Department therefore finds that Red Garden and Red Chamber do not maintain a principal agent relationship, and there is no indication that Red Chamber is in a position to exercise legal or operational control over Red Garden's decisions concerning the production, pricing, or cost of the subject merchandise, or vice versa.

As such, we preliminarily determine that the record evidence does not support a finding that Red Garden is controlled by Red Chamber, or vice versa. Therefore, we preliminarily find these two companies are not affiliated. Because Red Garden's first arm's-length transaction therefore occurred upon the sale to Red Chamber, we have based our margin calculation for Red Garden on Red Garden's EP sales to Red Chamber.

Facts Available

Section 776(a)(2) of the Act provides that, if an interested party withholds information requested by the Department, fails to provide such information by the deadline or in the form or manner requested, significantly impedes a proceeding, or provides information which cannot be verified, the Department shall use facts otherwise available in reaching the applicable determination.

Section 782(e) of the Act requires the Department to consider information that is submitted by the respondent and is necessary to the determination but does not meet all the applicable requirements established by the Department if: (1) The information is submitted by the deadline established for its submission; (2) the information can be verified; (3) the information is not so incomplete that it cannot serve as a reliable basis for reaching the applicable determination; (4) the interested party has demonstrated that it acted to the best of its ability in providing the information and meeting the requirements established by the Department with respect to the information; and (5) the information can be used without undue difficulties.

Red Garden did not provide the factors of production for the following suppliers of subject merchandise sold to the United States: Chaoyang Jindu Hengchang Aquatic Products Enterprise Co., Ltd. (''Hengchang''), Raoping County Longfa Seafoods Co., Ltd. (''Longfa''), and Meizhou Aquatic Products Quick-Frozen Industry Co., Ltd. Shengping, Shantou (''Meizhou''). Section 773(c)(1) of the Act provides that the Department shall determine the NV using a factors-of-production methodology if: (1) The merchandise is exported from an NME country; and (2) the information available does not permit the calculation of NV using home-market prices, third-country prices, or constructed value under section 773(a) of the Act. Because the Department considers the PRC to be an NME, we must calculate NV using factors of production in accordance with section 773(c).

Red Garden reported that Hengchang and Longfa each supplied a minor amount of subject merchandise to Red Garden for sale to the United States during the POI. *See Red Garden's Analysis Memo* at 3. Red Garden requested that the Department ignore the factors of production from these two companies because the quantity was approximately one percent or less of Red Garden's total subject merchandise sales to the United States, and the collection and reporting of such data would pose an undue administrative burden for the respondent. *See* Red Garden's April 21, 2004, response at D–2 and May 4, 2004, response at 3. Accordingly, we have substituted the reported factors of production from Red Garden's other suppliers to determine the NV of Red Garden's sales of subject merchandise which were produced by Hengchang and Longfa, as facts available under section 776(a)(2) of the Act. We note that all CONNUMs for Red Garden's sales of subject merchandise to the United States during the POI that were produced by Hengchang and Longfa are also produced by Mingfeng and/or Longfeng. As facts available, we have preliminarily substituted Mingfeng and/or Longfeng's factors of production by CONNUM for merchandise produced by Hengchang and Longfa.

Red Garden has stated that Meizhou, an additional supplier of subject merchandise that Red Garden sold to the United States, does not have

adequate verifiable documents in the POI in order to report its factors of production. *See* Red Garden's June 18, 2004, response at 18. Because Red Garden failed to provide the necessary information to determine the NV of those sales that were produced by Meizhou, the Department finds that applying facts available under section 776(a)(2) of the Act is warranted. We note that all CONNUMs for Red Garden's sales of subject merchandise to the United States during the POI which were produced by Meizhou are also produced by Mingfeng and/or Longfeng. As facts available, we have preliminarily substituted Mingfeng and/or Longfeng's factors of production by CONNUM for merchandise produced by Meizhou.

Normal Value

Section 773(c)(1) of the Act provides that the Department shall determine the NV using a factors-of-production methodology if the merchandise is exported from an NME country and the information does not permit the calculation of NV using home-market prices, third-country prices, or constructed value under section 773(a) of the Act. The Department will base NV on factors of production because the presence of government controls on various aspects of these economies renders price comparisons and the calculation of production costs invalid under its normal methodologies.

For purposes of calculating NV, we valued the PRC factors of production in accordance with section 773(c)(1) of the Act. Factors of production include, but are not limited to hours of labor required, quantities of raw materials employed, amounts of energy and other utilities consumed, and representative capital costs, including depreciation. In examining surrogate values, we selected, where possible, the publicly available value which was an average non-export value, representative of a range of prices within the POI or most contemporaneous with the POI, product-specific, and tax-exclusive. We used the usage rates reported by respondents for materials, energy, labor, by-products, and packing. For a more detailed explanation of the methodology used in calculating various surrogate values, *see Factor-Valuation Memo*.

In response to a supplemental questionnaire dated June 8, 2004, ZG stated that it leased shrimp ponds for breeding. *See* ZG's June 8, 2004, Submission at 16. On June 24, 2004, in response to another supplemental questionnaire, ZG provided sample lease agreements for the leasing of the shrimp ponds. *See* ZG's June 24, 2004, Submission at Exhibit 2. We have determined that this factor is an important component in the cost build-up of NV and is not reflected in the financial ratios calculated from Devi Sea Foods, Ltd. and Sandhya Marines, Ltd. financial statements. Consequently, we have valued the cost of land using information contained in a Notification of Policy for Land Revenue issued by the State of Rajasthan, India (Indian Policy'') which can be found at *http://www.investrajasthan.com/pdf/policy/wastelandpolicy.pdf* (last visited July 2, 2004).

In that Indian Policy, the Indian State of Rajasthan set the cost of land and lease rent for cultivable wasteland. The annual lease rent for the land increases over the period of ten years, as the land becomes increasingly arable. For example, after ten years, presumably at the time the land is fully cultivable, the annual lease rent is set at 400 rupees per hectare.

Based on the limited information available at this time, we have determined that the rates presented in this Indian Policy serve as the most reliable surrogate value for calculating a cost of the shrimp ponds used to grow the subject merchandise as this is the only information on the record to value ZG's land lease costs. Furthermore, we find that the price for land that has been cultivated for more than ten years (400 Rs / Hectare) is the most appropriate surrogate value, because the land is currently being used for cultivation of food products. In order to determine the land lease cost for each unit of production of subject merchandise during the POI, we pro-rated the land lease price to reflect the six months of the POI. In addition, because the data is not contemporaneous with the POI, we adjusted the rate for inflation. We then converted the price from Rs to USD, and multiplied the USD per hectare price by the number of hectares of ponds leased by ZG, and allocated that POI costs over Zhanjiang's total POI production of subject merchandise. See ZG's analysis memorandum for the calculation of the per kilogram amount of land lease that was added to overhead.

With regard to Red Garden, who also leased shrimp ponds, we do not have the necessary information at this time to calculate a land-lease cost. Although the Department recognizes that this portion of overhead may not be captured in the margin calculation because the Department did not request this information from Red Garden, we are not valuing Red Garden's land-lease costs for shrimp ponds in this preliminary determination. However, the Department will request the necessary information in a supplemental questionnaire and may use this information for the final determination.

Factor Valuations

In accordance with section 773(c) of the Act, we calculated NV based on factors of production reported by respondents for the POI. To calculate NV, we multiplied the reported per-unit factor quantities by publicly available Indian surrogate values (except as discussed below). In selecting the surrogate values, we considered the quality, specificity, and contemporaneity of the data. As appropriate, we adjusted input prices by including freight costs to make them delivered prices. Specifically, we added to Indian import surrogate values a surrogate freight cost using the shorter of the reported distance from the domestic supplier to the factory or the distance from the nearest seaport to the factory where appropriate. This adjustment is in accordance with the Court of Appeals for the Federal Circuit's decision in *Sigma Corp.* v. *United States,* 117 F. 3d 1401 (Fed. Cir. 1997). For a detailed description of all surrogate values used for respondents, see *Factor-Valuation Memo*. Due to the extensive number of surrogate values it was necessary to assign in this investigation, we present a discussion of the main factors. For a detailed description of all surrogate values used for respondents, *see Factor-Valuation Memo*. For a detailed description of all actual values used for market-economy inputs, see the company-specific analysis memorandum dated July 2, 2004.

Except as discussed below, we valued raw material inputs using the weighted-average unit import values derived from the World Trade Atlas® online (''Indian Import Statistics''). *See Factor-Valuation Memorandum*. The Indian Import Statistics we obtained from the World Trade Atlas were published by the DGCI&S, Ministry of Commerce of India, which were reported in rupees and are contemporaneous with POI. Where we could not obtain publicly available information contemporaneous to the POI with which to value factors, we adjusted the surrogate values using the Indian Wholesale Price Index (''WPI'') as published in the *International Financial Statistics* of the International Monetary Fund.

Furthermore, with regard to both the Indian import-based surrogate values and the market-economy input values, we have disregarded prices that we have reason to believe or suspect may be subsidized. We have reason to believe or

suspect that prices of inputs from Indonesia, South Korea, and Thailand may have been subsidized. We have found in other proceedings that these countries maintain broadly available, non-industry-specific export subsidies and, therefore, it is reasonable to infer that all exports to all markets from these countries may be subsidized. *See Final Determination of Sales at Less Than Fair Value: Certain Helical Spring Lock Washers From The People's Republic,* 61 FR 66255 (February 12, 1996) and accompanying *Issues and Decision Memorandum* at Comment 1. We are also directed by the legislative history not to conduct a formal investigation to ensure that such prices are not subsidized. *See* H.R. Rep. 100–576 at 590 (1988). Rather, Congress directed the Department to base its decision on information that is available to it at the time it makes its determination. Therefore, we have not used prices from these countries either in calculating the Indian import-based surrogate values or in calculating market-economy input values. In instances where a market-economy input was obtained solely from suppliers located in these countries, we used Indian import-based surrogate values to value the input. *See Notice of Final Determination of Sales at Less Than Fair Value and Negative Final Determination of Critical Circumstances: Certain Color Television Receivers From the People's Republic of China (''CTVs from the PRC'')*, 69 FR 20594 (April 16, 2004).

Finally, imports that were labeled as originating from an ''unspecified'' country were excluded from the average value, because the Department could not be certain that they were not from either an NME or a country with general export subsidies. Unit values were generally calculated in U.S. dollars (''USD'') per kilogram (''kg'').

On May 10, 2004, the Department requested all mandatory respondents to provide a chart indicating the Harmonized Tariff Schedule (''HTS'') heading and article description for each mandatory respondent's factors of production. The Department prefers to rely upon the mandatory respondents' HTS classification for its inputs during the POI. However, for HTS classifications which were supplied incorrectly by the mandatory respondents, we applied the most similar HTS classification that best captured the factor of production described by the Respondents. Where import data is not available for the POI, the Department sought to obtain data for the six-month period immediately preceding the POI (10/2002–03/2003). As a third alternative, the Department sought to obtain data for the period preceding that the period (*i.e.*, 03/2002–09/2002). Where input values were not contemporaneous with the POI, we adjusted them for inflation using the IMF's WPI rate for India.

Indian surrogate values denominated in foreign currencies were converted to USD using the applicable average exchange rate for India for the POI. The average exchange rate was based on exchange rate data from the Department's Web site. The POI exchange rate used is 0.02149 USD per Rupee.

Shrimp Surrogate Value

The Department notes that the value of the main input, head-on, shell-on (''HOSO'') shrimp, is an important factor of production in our dumping calculation as it accounts for a significant percentage of normal value. As a general matter, the Department prefers to use publicly available data to value surrogate values from the surrogate country to determine factor prices that, among other things: represent a broad market average; are contemporaneous with the POI; and are specific to the input in question. *See, e.g., Notice of Final Determination of Sales at Less Than Fair Value: Saccharin from the People's Republic of China,* 68 FR 27530, (May 20, 2003) and accompanying Issues and Decision Memorandum, at Comment 1. In this instance, none of the values placed on the record by the Respondents or the Petitioners wholly satisfies all three of these requirements.

The Department only considers using surrogate values outside the primary surrogate country if there are no values from that country available or if it decides that the values available are aberrational or otherwise unsuitable for use. The Respondents and Petitioners have placed numerous Indian shrimp values on the record. In this case, the Department has found a suitable surrogate value for shrimp from the surrogate country. Therefore, using a surrogate value from a country other than one from India is not necessary. Consequently, the Department did not use any shrimp values from a surrogate country other than India.

The Department notes that the Petitioners and Respondents have argued at different times that count size is an important factor in the control number (''CONNUM'') creation. *See* Petitioners submission of February 4, 2004, at 3; Respondents' February 4, 2004, submission at Attachment 1. However, an analysis of the Respondents' count size data demonstrates that the final count size prices suggested by the Respondents relied upon numerous assumptions.

On May 21, 2004, the Respondents submitted surrogate factor prices to value raw shrimp. Specifically, the Respondents proposed a surrogate value based on prices published by SEAI in the regions of Andarah Pradesh and Tamil Nadu. *See* Respondents' May 21, 2004, Submission at Exhibit 3. The Respondents explained that SEAI is the organization that represents Indian exporters and processors of shrimp and has offices in the main shrimp producing regions of India. The SEAI prices proposed by the Respondents represented different counts sizes of raw shrimp sold from farms to exporters and processors. According to the Respondents, the prices from SEAI are contemporaneous with the POI and reflect values for shrimp purchased. The Respondents also stated that the SEAI prices represent prices from two regions in India accounting for over 55% of the Indian shrimp industry's total production. *See* Respondents' May 21, 2004, Submission at Exhibit 3.

On June 4, 2004, the Petitioners argued that the Respondents' SEAI prices are not publically available. The Petitioners provided an affidavit from an Indian market researcher which states that SEAI does not collect or publish the information provided in Exhibit 3 of the Respondents' May 21, 2004, submission to the public at large. *See* Petitioner's June 4, 2004, Submission at Attachment II. Furthermore, the Petitioners argue that SEAI's prices are only available to members of SEAI.

The Petitioners also argue that the pricing data provided by the Respondents is data that does not represent market prices because they do not appear to reflect actual sales transactions and because they are suggested minimum prices by committee and should be considered floor prices. The Petitioners note that the affidavit provided from their Indian market researcher states that ''SEAI does not collect or maintain actual fresh shrimp transaction prices but provides suggested minimum prices to be offered to fresh shrimp suppliers.'' *See* Petitioners' June 4, 2004, Submission at 6. In addition, the Petitioners argue that the Respondents have engaged in selectively submitting a very limited amount of data as the Respondents have only provided a limited period of prices. Therefore, the Petitioners propose that the Department use a surrogate value calculated from the May 2002–June 2003 financial statements of Apex Foods Ltd., a shrimp processor in Bangladesh or a surrogate value calculated from the

April 2002–March 2003 financial statements of Nekkanti Sea Foods Ltd.

On June 10, 2004, the Department issued the Respondents a supplemental questionnaire regarding the surrogate values, including the SEAI prices. On June 21, 2004, the Respondents provided their response. On June 28, 2004, the Department called SEAI and spoke with Mr. Reddy Raghuanath, the current Secretary General of SEAI regarding the values submitted by the Respondents. *See Memorandum to the File from James C. Doyle Regarding Phone Call to the Seafood Exporter's Association of India (''SEAI''),* dated June 28, 2004 (''*SEAI Memo*'').

Based on the record evidence, although the Department would prefer to use count-size specific surrogate values for the raw shrimp input, the Department finds that the only count-size specific surrogate value submitted by the Respondents is not the most appropriate basis for valuing the raw shrimp input for numerous reasons.

First, we note that the Department practice is to rely on publicly available data. *See Notice of Final Determination of Sales at Less Than Fair Value: Polyvinyl Alcohol from the People's Republic of China,* 68 F 47538 (August 11, 2003) and accompanying Issues and Decision Memorandum at Comment 1. As indicated in the *SEAI Memo,* Mr. Rughuanath stated that these prices are ''only available to members of the SEAI.'' See *SEAI Memo.* In addition, we asked Mr. Rughuanath if these prices could be made available to the Department. Although Mr. Rughuanath explained that he would get back to us, we did not receive any further communication from him before the preliminary determination. We also attempted to locate these prices on the internet and were unsuccessful as SEAI does not maintain a website. Therefore, given that the Petitioners' Indian market researcher and the Department were unable to locate these prices either via the internet or through our request to SEAI, we do not consider these prices to be publicly available.

Second, the SEAI prices provided by the Respondents are not representative of the entire POI for those prices from the Andarah Pradesh region. The Respondents only provided prices from a selected time period within the POI. Specifically, the Respondents provided prices distributed on June 6, 2003, June 21, 2003, July 26, 2003, and August 9, 2003. In addition, it is unclear as to whether the SEAI prices provided by the Respondents are weekly or daily. Mr. Rughuanath indicated that these prices are distributed monthly, however, the Respondents provided two sources from SEAI for the month of June 2003. With regard to the SEAI prices from the Tamil Nadu region, the Department notes that although these prices are contemporaneous with the POI because it is an average price from the POI, it is unclear as to how the average was derived. Therefore, given that the SEAI prices from the Andarah Pradesh region represent only a selected number of prices and that the SEAI prices from the Tamil Nadu region are not provided with supporting documentation (*i.e.*, daily or weekly price circulars), we do not consider these prices to be a broad market average.

In addition, the record contains conflicting statements regarding the representativeness of the regions from which the SEAI prices were obtained. Mr. Raghuanath stated that the Andarah Pradesh and Tamil Nadu regions account for 10–11% of India's shrimp purchases. *See SEAI Memo.* However, the Respondents' May 21, 2004, submission indicates that these two regions produced over 55% of the Indian shrimp industry's production. *See* Respondents' May 21, 2004, submission at Exhibit 3. The reliability of the Respondents' supporting documentation is called into question by the statements made by SEAI Secretary General. *See SEAI Memo.* Consequently, it is unclear how the purchased amounts reconcile with the production figures cited by the Respondents. Therefore, the representativeness of the Andarah Pradesh and Tamil Nadu regions of India's shrimp industry as a source for a shrimp surrogate value is unreliable.

Finally, even if the Department were to use SEAI's count-size specific prices, the count sizes reported by the Respondents do not directly correspond to the count sizes indicated in SEAI's prices. The Respondents' count sizes are provided on a range basis (*e.g.*, 61–70 and 71–80) and these ranges are not consistent with the count-size SEAI prices (*e.g.*, 60, 70, 80, etc.). For example, if a Respondent reported a count size of 41–50, it is unclear as to which SEAI price would be applicable, the 41 count price or the 50 count price. The Department would also need to adjust prices into different count sizes. Therefore, because of the lack of consistency between the count sizes in SEAI's prices and the Respondents' reported count sizes, the Department determines that relying on SEAI prices and applying them to the Respondents' reported count sizes would require potentially inaccurate adjustments not based on the record evidence.

Consequently, based on the record evidence, although the Department would prefer to use count-size specific surrogate values for the raw shrimp input, the Department finds that the only count-size specific surrogate value submitted by the Respondents is not the most appropriate basis for valuing the raw shrimp input because it is not publicly available, does not represent a broad market average, has been shown to be representative of prices in India and does not contain prices for certain count-size ranges used by the Respondents.

As a result, for this preliminary determination, we are relying on a raw shrimp surrogate value based on the April 2002–March 2003 financial statements of Nekkanti, from which we derived a purchase price. We note that although relying on Nekkanti's financial statement to value the raw shrimp does not provide the Department with a count-size specific surrogate value, it does not contain the concerns we have if we used the SEAI prices. This information is publicly available and represents an average purchase price over Nekkanti's fiscal year (a 12-month period). We also note that this average price represents an appropriate valuation basis when compared with the relevant range of count sizes for the PRC Respondents. *See Factor Valuation Memo* at 13. Therefore, we have relied upon Nekkanti's 2002–2003 financial statements as the basis for the shrimp surrogate value.

To value shrimp larvae for those Respondents that grow shrimp, the Department has valued shrimp larvae using an average of the price derived from the Nekkanti Sea Foods Ltd. financial statement for 04/2002—03/2003, and the price quoted in *Fishing Chimes,* which is an Indian seafood industry publication. Both values are contemporaneous with the POI and are from public Indian sources. *See Factor Valuation Memo* at Exhibit 3.

Other Surrogate Values

To value ice, we used the prices submitted by the Respondents, published in the September 30, 2002 edition of the *Hindu Business Line. See* Yelin and Allied's May 21, 2004, submission at Exhibit 12. The article presents a high and low price paid by seafood processors in India for block ice. We averaged these prices for a value of Rs 1.05 per kilogram of ice, which was then adjusted for inflation and converted to USD. *See Factor Valuation Memo* at Exhibit 4.

To value water, we used the average water tariff rate as reported in the Asian Development Bank's *Second Water*

Utilities Data Book: Asian and Pacific Region (''ADB's Water Utility Book'') (1997), based on the average of the price per cubic meter (''m^3'') for four cities in India. We adjusted the average cost of water for the four cities for inflation and converted the value to USD. *See Factor Valuation Memo* at Exhibit 4. We have used data from this source in other antidumping proceedings. *See Certain Helical Spring Lock Washers from the Peoples Republic of China; Preliminary Results of Antidumping Duty Administrative Review,* 68 FR 63060, 63063 (November 7, 2003) (''*Lock Washers from the PRC*'').

We valued electricity using rates from *Key World Energy Statistics 2003,* published by the International Energy Agency (''IEA''). We adjusted the electricity rates for the POI by using the WPI inflator. *See Factor Valuation Memo* at Exhibit 11. We have used previous editions of this report in other antidumping proceedings. *See, e.g., Creatine Monohydrate from the People's Republic of China: Preliminary Results of Antidumping Duty Administrative Review,* 68 FR 62767, 62769 (November 6, 2003) (''*Creatine from the PRC*''); *Notice of Final Results and Rescission, in Part, of the Antidumping Duty Administrative Review: Petroleum Wax Candles From the People's Republic of China Monday,* 69 FR 12121, 12126 (March 15, 2004) (''*Wax Candles from the PRC*'').

We valued heavy oil using rates from *Key World Energy Statistics 2003,* published by the IEA. We adjusted the rate for the POI by using the WPI inflator. *See Factor Valuation Memo* at Exhibit 11.

We valued diesel fuel using rates from *Key World Energy Statistics 2003,* published by the IEA. We adjusted the rate for the POI by using the WPI inflator. *See Factor Valuation Memo* at Exhibit 11. We have used previous editions of this report in other antidumping proceedings. *See, e.g., Creatine from the PRC,* 68 FR at 62769; *Wax Candles from the PRC,* 69 FR at 12126.

We valued coal using rates from *Key World Energy Statistics 2003*, published by the IEA. We adjusted the rate for the POI by using the WPI inflator. *See Factor Valuation Memo* at Exhibit 11.

Section 351.408(c)(3) of the Department's regulations requires the use of a regression-based wage rate. Therefore, to value the labor input, the Department used the regression-based wage rate for China published by Import Administration on our website. The source of the wage rate data is the *Yearbook of Labour Statistics* 2001, published by the International Labour Office (''ILO''), (Geneva: 2001), Chapter 5B: Wages in Manufacturing. See the Import Administration website: *http://ia.ita.doc.gov/wages/01wages/01wages.html*.

Our treatment of by-products is in accordance with the Department's practice. ''We allowed recovery/by-product credits where the company provided information demonstrating that the recoveries/by-products were sold and/or reused in the production process.'' *See Notice of Final Determination of Sales at Less Than Fair Value: Certain Hot-Rolled Steel Flat Products from the Peoples' Republic of China*, 66 FR 49632 (September 28, 2001) and accompanying Issues and Decision Memo at Comment 3.

To value the by-products, the Department used a surrogate value for shrimp by-products based on a purchase price quote for wet shrimp shells from an Indonesian buyer of crustacean shells as Indian values were not available. Although we recognize that the Respondents reported by-products other than shells, this information represents the best information on the record and is being used for this preliminary determination. *See Factor Valuation Memo* at Exhibit 10.

To value packing materials, the Department used Indian Import Statistics published by WTA *See Factor Valuation Memo* at Exhibit 5.

To value Factory Overhead (''FOH''), Selling, General & Administrative (''SG&A'') expenses and Profit for those Respondents who are shrimp processors, we used the 2002–2003 financial statement of Nekkanti Sea Foods Ltd. (''Nekkanti''), an Indian seafood processor. *See Factor Valuation Memo* at Exhibit 13. For FOH, SG&A expenses and Profit for those Respondents who are integrated producers of processed shrimp, we used the 2002–2003 financial statements of Devi Sea Foods, Ltd. (''Devi'') and Sandhya Marines, Ltd. (''Sandhya''), which are both integrated Indian producers of processed shrimp, and Nekkanti.

The Department notes that two of Red Garden's suppliers, Mingfeng and Longfeng, as well as ZG, conduct both processing and shrimp farming operations. The Department also notes that none of these three surrogate companies whose financial information is on the record conduct only these two operations. All three are processors and have nursery operations. The processing company's financial results would not include any farming operations, while the processor/nursery companies' include information regarding nursery operations. The Department therefore averaged the processing company's results with the two other companies in order to attempt to best approximate the financial experience of the respondents; by averaging results from a company with ''less'' expenses with those from companies with ''more'' relevant expenses, the Department achieves the best estimation for the financial experience of the limited information on the record permits.

Critical Circumstances

On May 19, 2003, the Petitioners alleged that there is a reasonable basis to believe or suspect critical circumstances exist with respect to the antidumping investigations of certain frozen and canned warmwater shrimp from the PRC. On May 27, 2003, the Respondents submitted comments on the Petitioners' allegation of critical circumstances. In accordance with 19 CFR 351.206(c)(2)(i), because the Petitioners submitted critical circumstances allegations more than 20 days before the scheduled date of the preliminary determination, the Department must issue preliminary critical circumstances determinations not later than the date of the preliminary determination.

Section 733(e)(1) of the Act provides that the Department will preliminarily determine that critical circumstances exist if there is a reasonable basis to believe or suspect that: (A)(i) there is a history of dumping and material injury by reason of dumped imports in the United States or elsewhere of the subject merchandise; or (ii) the person by whom, or for whose account, the merchandise was imported knew or should have known that the exporter was selling the subject merchandise at less than its fair value and that there was likely to be material injury by reason of such sales; and (B) there have been massive imports of the subject merchandise over a relatively short period. Section 351.206(h)(1) of the Department's regulations provides that, in determining whether imports of the subject merchandise have been ''massive,'' the Department normally will examine: (i) the volume and value of the imports; (ii) seasonal trends; and (iii) the share of domestic consumption accounted for by the imports. In addition, section 351.206(h)(2) of the Department's regulations provides that an increase in imports of 15 percent during the ''relatively short period'' of time may be considered ''massive.'' Section 351.206(i) of the Department's regulations defines ''relatively short period'' as normally being the period beginning on the date the proceeding begins (*i.e.*, the date the petition is filed)

and ending at least three months later. The regulations also provide, however, that if the Department finds that importers, exporters, or producers had reason to believe, at some time prior to the beginning of the proceeding, that a proceeding was likely, the Department may consider a period of not less than three months from that earlier time.

In determining whether the relevant statutory criteria have been satisfied, we considered: (i) the evidence presented by the Petitioners in their May 19, 2003, filing; (ii) new evidence obtained since the initiation of the less-than-fair-value (''LTFV'') investigation (*i.e.*, additional import statistics released by the U.S. Census Bureau); and (iii) the ITC's preliminary determination of material injury by reason of imports.

To determine whether there is a history of injurious dumping of the merchandise under investigation, in accordance with section 733(e)(1)(A)(i) of the Act, the Department normally considers evidence of an existing antidumping duty order on the subject merchandise in the United States or elsewhere to be sufficient. *See Preliminary Determination of Critical Circumstances: Steel Concrete Reinforcing Bars From Ukraine and Moldova*, 65 FR 70696 (November 27, 2000). With regard to imports of certain frozen and canned warmwater shrimp from the PRC, the Petitioners make no statement concerning a history of dumping for the PRC. We are not aware of any antidumping order in the United States or in any country on certain frozen and canned warmwater shrimp from the PRC. For this reason, the Department does not find a history of injurious dumping of the subject merchandise from the PRC pursuant to section 733(e)(1)(A)(i) of the Act.

To determine whether the person by whom, or for whose account, the merchandise was imported knew or should have known that the exporter was selling the subject merchandise at less than its fair value and that there was likely to be material injury by reason of such sales in accordance with 733(e)(1)(A)(ii) of the Act, the Department normally considers margins of 25 percent or more for export price sales or 15 percent or more for constructed export price transactions sufficient to impute knowledge of dumping. *See Preliminary Determination of Sales at Less Than Fair Value: Certain Cut-to-Length Carbon Steel Plate from the People's Republic of China*, 62 FR 31972, 31978 (October 19, 2001). Because the preliminary dumping margins two of the Respondents, Yelin and Allied, and the Section A Respondents, are greater than 25 percent for EP and 15 percent for CEP, we find there is a reasonable basis to impute to importers knowledge of dumping with respect to all imports from the PRC. *See Critical Circumstance Memo* at Attachment II.

In determining whether there are ''massive imports'' over a ''relatively short period,'' pursuant to section 733(e)(1)(B) of the Act, the Department normally compares the import volumes of the subject merchandise for at least three months immediately preceding the filing of the petition (*i.e.*, the ''base period'') to a comparable period of at least three months following the filing of the petition (*i.e.*, the ''comparison period''). However, as stated in section 351.206(i) of the Department's regulations, if the Secretary finds importers, exporters, or producers had reason to believe at some time prior to the beginning of the proceeding that a proceeding was likely, then the Secretary may consider a time period of not less than three months from that earlier time. Imports normally will be considered massive when imports during the comparison period have increased by 15 percent or more compared to imports during the base period.

For the reasons set forth in the *Critical Circumstances Memo*, we find sufficient bases exist for finding importers, or exporters, or producers knew or should have known an antidumping case was pending on certain frozen and canned shrimp imports from the PRC by August 2003, at the latest. In addition, in accordance with 351.206(i) of the Department's regulations, we determined December 2002 through August 2003 should serve as the ''base period,'' while September 2003 through May 2004 should serve as the ''comparison period'' in determining whether or not imports have been massive in the comparison period as these periods represent the most recently available data for analysis.

In this case, the volume of imports of certain frozen and canned warmwater shrimp from the PRC increased 51.57 percent from the critical circumstances base period December 2002 through August 2003) to the critical circumstances comparison period (September 2003 through May 2004).

For two of the mandatory respondents who submitted critical circumstances data, Yelin and Allied, and the Section A Respondents, we preliminarily determine, as noted above, that importers knew or should have known that the exporter was selling the subject merchandise at less than its fair value and that there was likely to be material injury by reason of such sales in accordance with 733(e)(1)(A)(ii) of the Act. For Yelin, Allied and the Section A Respondents, we also found massive imports over a relatively short period. *See Critical Circumstance Memo* at Attachment I. These two Respondents and the Section A Respondents satisfy imputed knowledge of injurious dumping criterion under 733(e)(1)(A)(ii) of the Act and the massive imports in accordance with 733(e)(1)(B) of the Act. Therefore, we preliminarily find that critical circumstances exist for these Respondents.

With regard to the PRC-wide entity, as noted above, we preliminary find that importers knew or should have known that the exporter was selling the subject merchandise at less than its fair value and that there was likely to be material injury by reason of such sales in accordance with 733(e)(1)(A)(ii) of the Act. In addition, we also find massive imports over a relatively short period because the volume of imports of certain frozen and canned warmwater shrimp from the PRC-wide entity increased more than 15 percent. *See Critical Circumstance Memo* at Attachment I. Therefore, we preliminary find that critical circumstances exist for the PRC-wide entity.

Given the analysis summarized above, and described in more detail in the *Critical Circumstances Memo*, we preliminarily determine that critical circumstances exist for imports of certain frozen and canned warmwater shrimp from Allied, Yelin, the Section A Respondents receiving a separate rate and the PRC-wide entity. However, for ZG and Red Garden, we preliminarily determine that no critical circumstances exist.

We will make a final determination concerning critical circumstances for all producers/ exporters of subject merchandise from the PRC when we make our final dumping determinations in this investigation, which will be 135 days after publication of the preliminary dumping determination.

Verification

As provided in section 782(i)(1) of the Act, we intend to verify the information upon which we will rely in making our final determination.

Preliminary Determination

The weighted-average dumping margins are as follows:

CERTAIN FROZEN AND CANNED WARMWATER SHRIMP FROM THE PRC—MANDATORY RESPONDENTS

Manufacturer/exporter	Weighted-average margin (percent)
Allied	90.05
ZG	[1] 0.04
Red Garden	7.67
Yelin	98.34
PRC-Wide Rate	112.81

[1] *De Minimis.*

CERTAIN FROZEN AND CANNED WARMWATER SHRIMP FROM THE PRC—SECTION A RESPONDENTS

Manufacturer/exporter	Weighted-average margin (percent)
Beihai Zhengwu Industry Co., Ltd.	49.09
Chenghai Nichi Lan Food Co., Ltd.	49.09
Dalian Ftz Sea-Rich International Trading Co., Ltd.	49.09
Dongri Aquatic Shantou Ocean Freezing	49.09
Gallant Ocean (Liangjiang) Co., Ltd.	49.09
Meizhou Aquatic Products Quick-Frozen Industry Co., Ltd.	49.09
Pingyang Xinye Aquatic Products Co., Ltd.	49.09
Savvy Seafood Inc.	49.09
Shanghai Taoen International Trading Co., Ltd.	49.09
Shantou Jinyuan District Mingfeng Quick-Frozen Factory	49.09
Shantou Long Feng Foodstuffs Co., Ltd.	49.09
Shantou Ocean Freezing Industry and Trade General Corporation	49.09
Shantou Wanya Food Factory Co., Ltd.	49.09
Xuwen Hailang Breeding Co., Ltd.	49.09
Yantai Wei-Cheng Food Co., Ltd.	49.09
Zhangjiang Bobogo Ocean Co., Ltd.	49.09
Zhangjiang Newpro Food Co., Ltd.	49.09
Zhangjiang Universal Seafood Corp.	49.09
Zhoushan Cereals Oils and Foodstuffs Import and Export Co., Ltd.	49.09
Zhoushan Huading Seafood Co., Ltd.	49.09
Zhoushan Lizhou Fishery Co., Ltd.	49.09

Disclosure

We will disclose the calculations performed within five days of the date of publication of this notice to parties in this proceeding in accordance with 19 CFR 351.224(b).

Suspension of Liquidation

In accordance with section 733(d) of the Act, we will instruct the CBP to suspend liquidation of all entries of subject merchandise, entered, or withdrawn from warehouse, for consumption on or after the date of publication of this notice in the **Federal Register**. We will instruct CBP to require a cash deposit or the posting of a bond equal to the weighted-average amount by which the normal value exceeds U.S. price, as indicated above for Red Garden. For ZG, we will not direct the U.S. Customs Service to suspend liquidation of any entries of certain frozen and canned warmwater shrimp from the PRC as described in the ''Scope of Investigation'' section, that are entered, or withdrawn from warehouse, for consumption on or after the date of publication of this notice in the **Federal Register**. The Department does not require any cash deposit or posting of a bond for this preliminary determination for ZG. With respect to Allied, Yelin, the Section A Respondents receiving a separate rate and the PRC-wide entity, the Department will direct CBP to suspend liquidation of all entries of certain frozen and canned warmwater shrimp from the PRC that are entered, or withdrawn from warehouse, for consumption on or after 90 days prior to the date of publication in the **Federal Register** of our preliminary determinations in these investigations. The suspension of liquidation will remain in effect until further notice.

International Trade Commission Notification

In accordance with section 733(f) of the Act, we have notified the ITC of the Department's preliminary affirmative determination of sales at less than fair value. Section 735(b)(2) of the Act requires that the ITC make a final determination before the later of 120 days after the date of the Department's preliminary determination or 45 days after the Department's final determination whether the domestic industry in the United States is materially injured, or threatened with material injury, by reason of imports of certain frozen and canned warmwater shrimp, or sales (or the likelihood of sales) for importation, of the subject merchandise. Because we have postponed the deadline for our final determination to 135 days from the date of publication of this preliminary determination, the ITC will make its final determination within 45 days of our final determination.

Public Comment

Case briefs or other written comments may be submitted to the Assistant Secretary for Import Administration no later than seven days after the date of the final verification report issued in this proceeding and rebuttal briefs limited to issues raised in case briefs, no

later than five days after the deadline date for case briefs. A list of authorities used and an executive summary of issues should accompany any briefs submitted to the Department. This summary should be limited to five pages total, including footnotes.

In accordance with section 774 of the Act, we will hold a public hearing, if requested, to afford interested parties an opportunity to comment on arguments raised in case or rebuttal briefs. If a request for a hearing is made, we will intend to hold the hearing three days after the deadline of submission of rebuttal briefs at the U.S. Department of Commerce, 14th Street and Constitution Avenue, NW., Washington, DC 20230, at a time and location to be determined. Parties should confirm by telephone the date, time, and location of the hearing two days before the scheduled date.

Interested parties who wish to request a hearing, or to participate if one is requested, must submit a written request to the Assistant Secretary for Import Administration, U.S. Department of Commerce, Room 1870, within 30 days after the date of publication of this notice. *See* 19 CFR 351.310(c). Requests should contain the party's name, address, and telephone number, the number of participants, and a list of the issues to be discussed. At the hearing, each party may make an affirmative presentation only on issues raised in that party's case brief and may make rebuttal presentations only on arguments included in that party's rebuttal brief.

We will make our final determination no later than 135 days after the date of publication of this preliminary determination, pursuant to section 735(a)(2) of the Act.

This determination is issued and published in accordance with sections 733(f) and 777(i)(1) of the Act.

Dated: April 2, 2004.

James J. Jochum,

Assistant Secretary for Import Administration.

[FR Doc. 04–16110 Filed 7–15–04; 8:45 am]

BILLING CODE 3510–DS–P

DEPARTMENT OF COMMERCE

International Trade Administration

[A–552–802]

Notice of Preliminary Determination of Sales at Less Than Fair Value, Negative Preliminary Determination of Critical Circumstances and Postponement of Final Determination: Certain Frozen and Canned Warmwater Shrimp From the Socialist Republic of Vietnam

AGENCY: Import Administration, International Trade Administration, Department of Commerce.

EFFECTIVE DATE: July 16, 2004.

FOR FURTHER INFORMATION CONTACT: James C. Doyle or Alex Villanueva, Import Administration, International Trade Administration, U.S. Department of Commerce, 14th Street and Constitution Avenue, NW., Washington, DC 20230; telephone: (202) 482–0159, or 482–3208, respectively.

Preliminary Determination

We preliminarily determine that certain frozen and canned warmwater shrimp from the Socialist Republic of Vietnam (''Vietnam'') is being, or is likely to be, sold in the United States at less than fair value (''LTFV''), as provided in section 733 of the Tariff Act of 1930, as amended (''the Act''). The estimated margins of sales at LTFV are shown in the ''Suspension of Liquidation'' section of this notice.

Interested parties are invited to comment on this preliminary determination. We will make our final determination not later than 135 days after the date of publication of this preliminary determination.

Case History

On December 31, 2003, the Ad Hoc Shrimp Trade Action Committee, an ad hoc coalition representative of U.S. producers of frozen and canned warmwater shrimp and harvesters of wild-caught warmwater shrimp (hereafter known as, the ''Petitioners''), filed, in proper form, petitions on imports of certain frozen and canned warmwater shrimp from Brazil, Ecuador, India, Thailand, the People's Republic of China (''the PRC'') and Vietnam. On January 12, 2003, the Petitioners filed amendments to the petition.

On January 12, 2003, the Vietnam Association of Seafood Exporters and Producers (''VASEP'') and the Vietnamese Shrimp Committee (''VSC'') submitted comments regarding industry support. On January 13, 2004, the Department requested that all interested parties submit comments on the Petitioners' calculation of industry support.

On January 13, 2004, the Petitioners filed a supplement to the petition.

On January 15, 2004, the Department received affidavits in support of the Petitioners' calculation of industry support. On January 15, 2004, VSC submitted additional comments regarding industry support. On January 16, 2004, the Petitioners submitted rebuttal comments to VSC's January 12, 2004, comments regarding industry support. On January 20, 2004, the Petitioners submitted supplemental information to the petition and revised comments to their January 16, 2004, submission.

On January 20, 2004, the Department initiated antidumping duty investigations on certain frozen and canned warmwater shrimp from Brazil, Ecuador, India, Thailand, the PRC and Vietnam. *See Notice of Initiation of Antidumping Duty Investigations: Certain Frozen and Canned Warmwater Shrimp from Brazil, Ecuador, India, Thailand, the People's Republic of China and the Socialist Republic of Vietnam* (''*Initiation Notice*'') 69 FR 3876 (January 27, 2004). On January 20, 2004, the Department notified the International Trade Commission (''ITC'') of the antidumping investigation initiation and the intent to publish in the **Federal Register** a notice of such initiation.

Post-Initiation General Case Issues and Letters From Outside Parties

On February 4, 2004, the Petitioners filed an amendment to their December 31, 2003 petition adding two other individuals as petitioners: Versaggi Shrimp Corporation and Indian Ridge Shrimp Company.

On February 10, 2004, the Department issued initiation instructions to U.S. Customs and Border Protection (''CBP'').

On March 2, 2004, the ITC issued its affirmative preliminary determination that there is a reasonable indication that an industry in the United States is threatened with material injury by reasons of imports from Vietnam of certain frozen and canned warmwater shrimp. *See Certain Frozen or Canned Warmwater Shrimp and Prawns from Brazil, China, Ecuador, India, Thailand and Vietnam* (''*ITC Injury Notice*'') 69 FR 9842 (March 2, 2004).

On March 18, 2004, VSC submitted comments regarding reporting requirements.

On May 24, 2004, the Department published in the **Federal Register** a notice postponing the preliminary determination in this investigation. *See*

Notice of Postponement of Preliminary Determination of Antidumping Duty Investigations: Certain Frozen and Canned Warmwater Shrimp from Brazil (A–353–838), Ecuador (A–331–802), India (A–533–840), Thailand (A–549–822), PRC (A–570–893) and Vietnam (A–503–802 [1]*)*, 69 FR 29509 (May 24, 2004) (''*Postponement Notice*'').

Model Match, Product Characteristics, and CONNUM

On January 28, 2004 the Department requested product characteristic comments from interested parties. On February 4, 2004, the Department received model match comments from VSC, the Thai Frozen Foods Association (''TFFA''), the Coalition of Shrimp Exporters/Producers of South China (the ''PRC Coalition''), the National Chamber of Aquaculture (Ecuador) (''CNA''), the Seafood Exporters' Association of India (''SEAI''), the Marine Products Export Development Authority (''MPDEA''), and the Petitioners. On February 9, 2004, TFFA filed comments on the Petitioners' model match submission. On February 9, and February 10, 2004, VSC and CNA, respectively, submitted rebuttal comments on the Petitioners' February 4, 2004 model match comments.

On February 11, 2004, the Petitioners filed rebuttal comments in response to VSC's February 4, 2004, model match comments and responses to VSC's, TFFA's, and CNA's February 9 and February 10, 2004 rebuttal comments. On February 17, 2004, the Department requested comments from all interested parties on draft product characteristic reporting.

On February 18, 2004, the Department received comments on product characteristics from SEAI and granted an extension for draft product characteristic comments from February 19 to February 23, 2004. On February 19, 2004, TFFA and CNA submitted comments on model match criteria. On February 23, 2004, VSC, Brazilian shrimp exporters, and the Petitioners submitted model match comments.

Quantity and Value

On January 29, 2004, the Department sent a letter to all interested parties in this investigation requesting responses to the quantity and value questionnaire. On January 29, 2004, the Department sent a letter to the Embassy of Vietnam seeking their support in the transmittal of the quantity and value questionnaire. On February 5, 2004, the Department received the quantity and value data from Vietnamese producers of shrimp [2] in accordance with our January 29, 2004, instructions. On February 20, 2004, VSC filed official company certifications for its February 5, 2004, submission.

Scope

On February 17, 2004, the Department received scope comments on behalf of Ocean Duke Corporation (''Ocean Duke'') requesting that the Department confirm that ''dusted shrimp,'' ''battered shrimp,'' and ''seafood mix'' not be covered by the scope of the investigation. On February 17, 2004, the Louisiana Shrimp Association (''LSA'') filed scope comments concerning fresh (never frozen) shrimp.

On February 26, 2004, Rubicon Resources (''Rubicon'') submitted scope comments in support of Ocean Duke's February 17, 2004, scope comments. On March 12, 2004, the Petitioners filed rebuttal comments to LSA's February 17, 2004, comments requesting an amendment of the scope of the investigations to include fresh shrimp. On March 16, 2004, the Petitioners submitted responses to the numerous scope comments concerning dusted and battered shrimp, and seafood mix.

On April 16, 2004, Ocean Duke submitted additional comments regarding dusted and battered shrimp, arguing that they fall within the meaning of the term ''breaded shrimp.'' On May 6, 2004, SEAI filed scope comments regarding warmwater salad shrimp and the species *Macrobachium rosenbergii*. On May 19, 2004, the Petitioners submitted scope comments regarding dusted shrimp, battered shrimp, organic raised shrimp, warmwater salad shrimp, and the species *Macrobachium rosenbergii*.

On June 4, 2004, Exportadora de Alimentons S.A. (''Expalsa'') submitted a response to the Petitioners' May 19, 2004, scope comments on organic shrimp. On June 4, 2004, Ocean Duke submitted a response to the Petitioners' May 19, 2004, scope comments regarding dusted and battered shrimp. On June 7, 2004, Eastern Fish Company (''Eastern Fish'') and Long John Silver's, Inc. (''LJS'') filed scope comments regarding dusted shrimp and battered shrimp. On June 9, 2004, the Department received certification for American Breaded Shrimp Processors Association's (''ABSPA'') June 7, 2004, submission.

Mandatory Respondents

On February 23, 2004, the Department issued its respondent selection memorandum, selecting Seaprodex Minh Hai; Camimex; Kim Ahn; and Mihn Phu as mandatory respondents (hereafter collectively referred to as the ''Respondents''). *See Memorandum to the File from James C. Doyle, Program Manager, to Edward C. Yang, Director of Office IX, Antidumping Duty Investigation of Certain Frozen and Canned Warmwater Shrimp from the Socialist Republic of Vietnam: Selection of Respondents* (''*Respondent Selection Memo*'').

On February 25, 2004, the Department issued the Department's non-market economy (''NME'') antidumping duty Section A questionnaire to the Respondents, with a March 17, 2004, deadline to file responses.

On March 1, 2004, the Department issued Sections C, D and E of the Department's NME questionnaire to the Respondents. On March 9, 2004, the Department informed the Respondents of revised reporting requirements with regard to Sections C and D of the antidumping duty questionnaire. On March 11, 2004 the Department sent the Government of Vietnam copies of the Department's NME questionnaires.

On March 12, 2004, VSC submitted applicable Vietnamese laws to the Department in response to the Department's Section A questionnaire. On March 19, 2004, the Respondents requested a three-week extension of the

[1] The Department inadvertently listed case number A–503–882 as Vietnam's case number in the *Postponement Notice*. The correct case number for Vietnam is A–552–802.

[2] Minh Phu Seafood Corporation (''Minh Phu''); Kim Anh Co., Ltd. (''Kim Anh''); Minh Hai Joint-Stock Seafoods Processing Company (''Seaprodex Minh Hai''); Camau Frozen Seafood Processing Import Export Corporation (''Camimex''); Can Tho Animal Fisheries Product Processing Export Enterprise (''Cafatex''); Cai Doi Vam Seafood Import Export Company (''Cadovimex''); Sao Ta Foods Joint Stock Company (''Fimex VN''); Viet Hai Seafood Company (''Vietnam FishOne''); Kiengiang Seafood Import Export Company (''Kisimex''); Soc Trang Aquatic Products and General Import Export Company (''Stapimex''); Coastal Fisheries Development Corporation (''Cofidec''); Phuong Nam Co., Ltd.; Cuu Long Seaproducts Company (''Cuulong Seapro''); Minh Hai Export Frozen Seafood Processing Joint-Stock Company (''Jostoco''); Can Tho Agriculture and Animal Products Import Export Company (''Cataco''); Nha Trang Fisheries Co.; Nhatrang Seaproduct Company (''Nhatrang Seafoods''); Minh Hai Seaproducts Import and Export Corporation (''Seaprimex''); Thuan Phuoc Seafoods and Trading Corporation; Nhatrang Fisheries Joint Stock Company (''Nhatrang Fishco''); Danang Seaproducts Import Export Company (''Seaprodex Danang''); C.P. Vietnam Livestock; UTXI Aquatic Products Processing Company; Viet Nhan Company; Investment Commerce Fisheries Corporation (''Incomfish''); Vinhloi Import Export Company (''Vimexico''); Bac Lieu Fisheries; Matourimex Ho Chi Minh City Branch (Tourism Material and Equipment Company); Viet Foods Co., Ltd.; Truc An Company; Camranh Seafoods Processing Enterprise PTE (''Camranh Seafoods''); Hai Thuan Company; Phu Cuong Company; Ngoc Sinh Company; Aquatic Product Trading Company (''APT''); Aquatic Songhuong Company; Hanoi Seaproducts Import Export Corp. (''Seaprodex Hanoi''); An Giang Fisheries Import-Export Joint Stock Company (''Agifish'').

deadline for responses to Sections C and D of the Department's antidumping questionnaire. The deadline was granted on March 19 and extended until April 21, 2004.

On March 25, 2004, the Department sent a letter to Camimex and Jostoco regarding collapsing the two companies. On March 25, 2004, the Department requested additional information from Jostoco regarding their response to the Section A questionnaire.

On March 25, 2004, the Petitioners submitted comments on the Section A responses of Kim Anh and Minh Phu. On March 26, 2004, the Petitioners submitted comments on the Section A responses of Seaprodex Minh Hai and Camimex. On March 29, 2004, the Department sent supplemental questionnaires to Minh Phu, Seaprodex Minh Hai, Camimex, and Kim Anh. On April 1, 2004, Seaprodex Minh Hai filed a letter clarifying its relationship with Seaprodex Vietnam.

On April 5, 2004, the Respondents requested a three-week extension to respond to the Department's supplemental Section A questionnaire. On April 7, 2004, the Department granted a ten-day extension from April 12 to April 22, 2004.

On April 13, 2004, the Department sent a supplemental questionnaire to Jostoco. On April 16, 2004, Jostoco requested a two-week extension to file responses to the Department's supplemental Section A questionnaire. On April 20, 2004, the Department granted Jostoco's Section A supplemental questionnaire extension request until April 27, 2004. On April 20, 2004, Jostoco requested an extension of the deadline for Section C and D questionnaire responses. On April 21, 2004, the Department granted Jostoco's request, extending the deadline to April 28, 2004.

On April 21, 2004, Camimex, Kim Anh, Minh Phu, and Minh Qui submitted responses to the Section C and D questionnaires. On April 22, 2004, the Department received Section A responses from Kim Anh, Seaprodex Minh Hai, Minh Phu, and Minh Qui. On April 22, 2004, Seaprodex Minh Hai submitted Section C and D questionnaire responses. On April 23, 2004, Camimex and Seaprodex Minh Hai filed their Section A responses. On April 23, 2004, Seaprodex Minh Hai requested and extension of time to respond to the Department's supplemental Section A questionnaire. On April 26, 2004, the Department extended Seaprodex Minh Hai's deadline to respond to the Section A supplemental questionnaire to May 4, 2004. On April 28, 2004, Seaprodex Minh Hai submitted Section C and D questionnaire responses.

On April 30, 2004, the Petitioners filed comments on the Respondents' supplemental Section A, C and D questionnaires. The Petitioners submitted proposed additional questions for Minh Phu, Minh Qui, Minh Phat, Camimex, Seaprodex Minh Hai, and Kim Anh.

On May 3, 2004, Kim Anh's filed its supplemental Section D questionnaire response. On May 4, 2004, Seaprodex Minh Hai submitted its second supplemental Section A questionnaire response. On May 14, 2004, the Department sent the Respondents supplemental questionnaires addressing deficiencies in their Section A questionnaire responses.

On May 21, 2004, Camimex, Minh Phu, Seaprodex Minh Hai, and Kim Anh requested an extension of the deadline for the submission of supplemental Section A, C and D questionnaire responses. On May 25, 2004, the Department granted an extension for supplemental questionnaire responses. On May 26, 2004, the Department granted a one-week extension to June 4, 2004, to Camimex, Seaprodex Minh Hai, and Minh Phu to respond to their supplemental Section A, C and D questionnaires. The Department also granted a one-week extension to Kim Anh to June 8, 2004.

On May 28, 2004, the Respondents requested an extension of the deadline for supplemental Section A, C and D questionnaire responses. On May 28, 2004 the Department granted a one-week extension to June 9, 2004, to the Respondents to respond to the Department's Section A supplemental questionnaire. On June 3, 2004, the Department granted Kim Ahn an extension of the deadline to respond to the Department's May 18, 2004 supplemental questionnaire.

On June 8, 2004, the Respondents requested an extension of the deadline for supplemental Section A, C and D questionnaire responses.

Surrogate Country and Factors

On March 5, 2004, the Department requested a list of surrogate countries from the Office of Policy. On March 12, 2004, the Department provided all interested parties with the opportunity to submit surrogate value information for valuing factors of production. On March 17, 2004, VSC requested a three-week extension to file surrogate country comments. The deadline was extended to April 2, 2004.

On March 29, 2004, VSC requested an additional extension of one week to comment on surrogate country selection. On March 31, 2004, a number of interested parties requested a three-week extension of the deadline to file comments on the appropriate surrogate country. On March 31, 2004, the Department granted a one-week extension for all surrogate country comments and set a new deadline of April 9, 2004. On April 9, 2004, VSC submitted surrogate value data. On April 30, 2004, VSC requested an extension of the deadline to file surrogate value information. On May 4, 2004, the Petitioners requested an extension of time to submit surrogate value data. On May 5, 2004, the Department granted a two-week extension to May 21, 2004, for all parties to submit surrogate value data.

On May 21, 2004, the Petitioners submitted surrogate value data for the factors of production. On May 21, 2004, VSC submitted a letter regarding publicly available information to value production factors. On June 4, 2004, the Respondents requested an extension of the deadline for the supplemental questionnaire response on surrogate values. On June 4, 2004, the Petitioners commented on VSC's surrogate value data. On June 7, 2004, the Department granted the Respondents a one-week extension to June 9, 2004, to answer the June 2, 2004, surrogate values questionnaire. On June 9, 2004, VSC submitted their surrogate value supplemental questionnaire response.

On June 16, 2004, the VASEP submitted rebuttal comments to Petitioners' surrogate values submission of June 4, 2004.

On June 22, 2004, VASEP submitted additional comments regarding the valuation of energy. On June 23, 2003, the Petitioners submitted additional surrogate value comments. On June 25, 2004, VASEP submitted comments regarding surrogate values. On June 29, 2004, the Department placed additional surrogate value data on the record and the Petitioners submitted additional comments regarding VASEP's June 22, 2004 comments.

Section A Respondents

On March 15, 2004, VSC requested an extension of the deadline for the Section A voluntary responses. A one-week extension for all Respondents was granted on March 16, 2004. *See* Memo to the File, from Lisa Shishido, dated March 15, 2004.

On March 17, 2004, the Department received Section A responses from the mandatory respondents along with: CP Vietnam Livestock; Bac Lieu Fisheries; UTXI Aquatic products Processing Company; Stapimex; Fimex VN; Nha Trang Fisheries Co.; Truc An Company;

Cadovimex; Vietnam FishOne; Cofidec; Jostoco; and Cafatex. On March 18, 2004, the Department received Section A responses from: Nha Trang Seafoods; Aquatic Songhuong Company; Seaprodex Hanoi; Nha Trang Fishco; Cuulong Seapro; Viet Nhan Company; Viet Foods Co. Ltd.; Incomfish; Seaprimex; and Seaprodex Danang. On March 19, 2004, the Department received Section A responses from: Haithuan Company; Pataya VN; Phu Cong Company; Vimexco; Ngoc Sinh Company; Camrahn Seafoods; APT; Kisimex; Cataco; Thuan Phuoc Seafoods and Trading Corporation; Phuong Nam Company Ltd. On March 24, 2004, the Department received a Section A response from Amanda Foods Vietnam Limited (''Amanda'').

On May 24, 2004, the Department sent supplemental Section A questionnaires to the following companies: Ngoc Sinh; Cofidec; Qnaire; Stapimex; Hai Thuan; Songhuong; Nha Trang Fishco; Nha Trang Seafoods; C.P. Vietnam; UTXI; Viet Foods; Kisimex; Truc An; Nha Trang; APT; Pataya Food; Cataco; Seaprodex Danang; Phuong Nam; Sao Ta; Cuu Long; Minh Hai; Cafatex; Camranh Seafoods; Thuan Phuoc; Cadovimex; and Viet Hai. On May 26, 2004, the Department sent supplemental Section A questionnaires to: Viet Nhan, Incomfish, Vimexco and Bac Lieu. On May 28, 2004, the Department received a letter from Bac Lieu, Incomfish, Viet Nhan and Vimexco requesting an extension of the deadline for their supplemental Section A questionnaire responses. The Department extended the deadline by one week to June 8, 2004.

On May 28, 2004, Amanda requested a two-week extension to respond to the Department's supplemental Section A questionnaires. On May 28, 2004, the Department sent Phu Cuong Company and Minh Hai Jostoco supplemental Section A questionnaires. On June 1, 2004, the Department granted Amanda a one week extension to June 15, 2004, to respond to the supplemental Section A questionnaire. On June 4, 2004, Amanda requested an additional three-day extension to respond to the supplemental Section A questionnaire. On June 7, 2004, the Department granted a one-day extension to Amanda to respond to their Section A questionnaire to June 9, 2004. On June 7, 2004, the Department received a request for an extension of the deadline for supplemental questionnaires issued to: Cam Ranh; Cofidec; C.P. Livestock; Kisimex; Seaprimexco; Seaprodex Danang; Seaprodex Hanoi; Stapimex; ASC; APT; Ngoc Sinh; and Truc An Company. On June 10, 2004, the Department granted the Respondents an extension of the deadline to respond to the Department's May 14, 2004, supplemental questionnaires.

Critical Circumstances Allegation

On May 19, 2004, the Petitioners submitted a request for an expedited critical circumstances finding to the Department. On May 27, 2004, VSC filed a letter opposing the Petitioners request that the Department determine that ''critical circumstances'' exist with respect to the importation of subject merchandise from Vietnam. On May 28, 2004, the Department sent a letter to the Respondents requesting monthly shipment data pertaining to the Petitioners' critical circumstances allegation.

On June 2, 2004, the Department sent a letter to Jostoco requesting monthly shipment data pertaining to the Petitioners' critical circumstances allegation. On June 2, 2004, the Department requested additional information from the Respondents in the form of a supplemental questionnaire to be due June 7, 2004.

On June 14, 2004, the Department received a request for a one-day extension to respond to the Department's May 28, 2004, request for critical circumstances data. The request was granted and the deadline was extended to June 15, 2004. On June 24, 2004, the Petitioners submitted supplemental critical circumstances data on the record.

Headless, Shell-on (''HLSO'') Issue

On May 21, 2004, the Department sent all interested parties a letter soliciting comments on the appropriate methodology to employ in making product comparisons, where applicable, and performing margin calculations for the purposes of the preliminary determination in the investigation. On June 7, 2004, the Department received comments on product comparison methodology from the Petitioners, VSC, CNA, Empresa De Armazenagem Frigorifica Ltda. (''EMPAF''), and Rubicon.

On June 8, 2004, the Department received comments from Thai I-Mei Frozen Foods Co., Ltd. and its affiliated reseller, Ocean Duke, on calculation methodology for the preliminary determination. Thai I-Mei Frozen Foods Co. addressed the issue of HLSO calculations in its letter.

On June 10, 2004, Union Frozen Products Co., Ltd. (''UFP'') replied to the Petitioners' June 7, 2004, submission on the issue of calculations being performed using data provided on an ''as sold'' basis or on an HLSO basis. On June 10, 2004, Rubicon submitted comments on the Petitioners' June 4, 2004, comments on the use of HLSO count sizes for comparisons and margin calculations.

On June 10, 2004, the Department received a request that SEAI's June 7, 2004, comments concerning the Department's appropriate methodology to employ in making product comparisons in the Indian investigation (A–533–84) be filed on the record of this investigation. On June 15, 2004, the Department received the Petitioners' rebuttal comments regarding the use of HLSO count sizes. On June 25, 2004, SEAI submitted additional comments on Petitioners' product comparison comments of June 15, 2004.

NME Status

On June 10, 2004, the Ministry of Trade of Vietnam submitted comments on the NME status of Vietnam on behalf of the Government of Vietnam.

Postponement of Final Determination

Section 735(a) of the Act provides that a final determination may be postponed until no later than 135 days after the date of the publication of the preliminary determination if, in the event of an affirmative preliminary determination, a request for such postponement is made by exporters who account for a significant proportion of exports of the subject merchandise or, in the event of a negative preliminary determination, a request for such postponement is made by the petitioners. The Department's regulations at 19 CFR 351.210(e)(2) requires that requests by respondents for postponement of a final determination be accompanied by a request for an extension of the provisional measures from a four-month period to not more than six months.

On June 17, 2004, the respondents requested that, in the event of an affirmative preliminary determination in this investigation, the Department postpone its final determination until 135 days after the publication of the preliminary determination. The Respondents' request also included a request to extend the provisional measures to not more than six months after the publication of the preliminary determination. Accordingly, because we have made an affirmative preliminary determination and the requesting parties account for a significant proportion of the exports of the subject merchandise, we have postponed the final determination until no later than 135 days after the date of publication of the preliminary determination and are

extending the provisional measures accordingly.

Period of Investigation

The period of investigation (''POI'') is April 1, 2003, through September 30, 2003. This period corresponds to the two most recent fiscal quarters prior to the month of the filing of the petition (December 31, 2003). *See* 19 CFR 351.204(b)(1).

Scope of Investigation

The scope of this investigations includes certain warmwater shrimp and prawns, whether frozen or canned, wild-caught (ocean harvested) or farm-raised (produced by aquaculture), head-on or head-off, shell-on or peeled, tail-on or tail-off,[3] deveined or not deveined, cooked or raw, or otherwise processed in frozen or canned form.

The frozen or canned warmwater shrimp and prawn products included in the scope of the investigations, regardless of definitions in the Harmonized Tariff Schedule of the United States (''HTSUS''), are products which are processed from warmwater shrimp and prawns through either freezing or canning and which are sold in any count size.

The products described above may be processed from any species of warmwater shrimp and prawns. Warmwater shrimp and prawns are generally classified in, but are not limited to, the *Penaeidae* family. Some examples of the farmed and wild-caught warmwater species include, but are not limited to, whiteleg shrimp (*Penaeus vannemei*), banana prawn (*Penaeus merguiensis*), fleshy prawn (*Penaeus chinensis*), giant river prawn (*Macrobrachium rosenbergii*), giant tiger prawn (*Penaeus monodon*), redspotted shrimp (*Penaeus brasiliensis*), southern brown shrimp (*Penaeus subtilis*), southern pink shrimp (*Penaeus notialis*), southern rough shrimp (*Trachypenaeus curvirostris*), southern white shrimp (*Penaeus schmitti*), blue shrimp (*Penaeus stylirostris*), western white shrimp (*Penaeus occidentalis*), and Indian white prawn (*Penaeus indicus*).

Frozen shrimp and prawns that are packed with marinade, spices or sauce are included in the scope of the investigations. In addition, food preparations, which are not ''prepared meals,'' that contain more than 20 percent by weight of shrimp or prawn are also included in the scope of the investigations.

[3] ''Tails'' in this context means the tail fan, which includes the telson and the uropods.

Excluded from the scope are (1) breaded shrimp[4] and prawns (1605.20.10.20); (2) shrimp and prawns generally classified in the *Pandalidae* family and commonly referred to as coldwater shrimp, in any state of processing; (3) fresh shrimp and prawns whether shell-on or peeled (0306.23.00.20 and 0306.23.00.40); (4) shrimp and prawns in prepared meals (1605.20.05.10); and (5) dried shrimp and prawns.

The products covered by this scope are currently classifiable under the following HTSUS subheadings; 0306.13.00.03, 0306.13.00.06, 0306.13.00.09, 0306.13.00.12, 0306.13.00.15, 0306.13.00.18, 0306.13.00.21, 0306.13.00.24, 0306.13.00.27, 0306.13.00.40, 1605.20.10.10, 1605.20.10.30, and 1605.20.10.40. These HTSUS subheadings are provided for convenience and for CBP purposes only and are not dispositive, but rather the written descriptions of the scope of these investigations is dispositive.

In accordance with the preamble to our regulations (*see Antidumping Duties*; *Countervailing Duties,* 62 FR 27296, 27323 (May 19, 1997), we set aside a period of time for parties to raise issues regarding product coverage and encouraged all parties to submit comments within 20 calendar days of publication of the *Initiation Notice*. *See Initiation Notice* 69 FR at 3877.

Throughout the 20 days and beyond, the Department received many comments and submissions regarding a multitude of scope issues, including: (1) fresh (never frozen) shrimp, (2) Ocean Duke's seafood mix, (3) salad shrimp sold in counts of 250 pieces or higher, (4) *Macrobrachium rosenbergii*, organic shrimp, (5) peeled shrimp used in breading, (6) dusted shrimp and (7) battered shrimp. On May 21, 2004, the Department determined that the scope of these investigations remains unchanged, as certain frozen and canned warmwater shrimp, without the addition of fresh (never frozen) shrimp. *See Memorandum from Jeffrey A. May, Deputy Assistant Secretary for Import Administration, AD/CVD Enforcement, Group III and Joseph A. Spetrini, Deputy Assistant Secretary for Import Administration, AD/CVD Enforcement, Group I to James J. Jochum, Assistant Secretary for Import Administration Regarding Antidumping Investigations on Certain Frozen and Canned Warmwater Shrimp from Brazil, Ecuador, India, the Socialist Republic of Vietnam, Thailand, and the Socialist Republic of Vietnam: Scope Determination Regarding Fresh (Never Frozen) Shrimp (''Fresh Shrimp Memo'')*, dated May 21, 2004.

On July 2, 2004, the Department made scope determinations with respect to Ocean Duke's seafood mix, salad shrimp sold in counts of 250 pieces or higher, *Macrobrachium rosenbergii*, organic shrimp and peeled shrimp used in breading. *See* Memorandum from Edward C. Yang, Vietnam/NME Unit Coordinator, Import Administration to Jeffrey A. May, Deputy Assistant Secretary for Import Administration Antidumping Investigation on Certain Frozen and Canned Warmwater Shrimp from Brazil, Ecuador, India, Thailand, the Socialist Republic of Vietnam and the Socialist Republic of Vietnam: Scope Clarification on Ocean Duke's Seafood Mix, Salad Shrimp Sold in Counts of 250 Pieces or Higher, *Macrobrachium rosenbergii,* Organic Shrimp and Peeled Shrimp Used in Breading (''*Scope Memo''*), dated July 2, 2004. Based on the information presented by interested parties, the Department determines that Ocean Duke's seafood mix is excluded from the scope of this investigation; however, salad shrimp sold in counts of 250 pieces or higher, *Macrobrachium rosenbergii*, organic shrimp and peeled shrimp used in breading are included within the scope of this investigation. *See Scope Memo* at 33.

Additionally, on July 2, 2004, the Department made a scope determination with respect to dusted shrimp and battered shrimp. *See Dusted/Battered Scope Memo*. Based on the information presented by interested parties, the Department preliminarily finds that while substantial evidence exists to consider battered shrimp to fall within the meaning of the breaded shrimp exclusion identified in the scope of these proceedings, there is insufficient evidence to consider that shrimp which has been dusted falls within the meaning of ''breaded'' shrimp. However, there is sufficient evidence for the Department to be prepared to exclude this merchandise from the scope of the order provided an appropriate description can be developed. *See Dusted/Battered Scope Memo* at 18. To that end, along with the previously solicited comments regarding breaded

[4] Pursuant to our scope determination on battered shrimp, we find that breaded shrimp includes battered shrimp as discussed below. *See Memorandum from Edward C. Yang, Vietnam/NME Unit Coordinator, Import Administration to Jeffrey A. May, Deputy Assistant Secretary for Import Administration Antidumping Investigation on Certain Frozen and Canned Warmwater Shrimp from Brazil, Ecuador, India, Thailand, the Socialist Republic of Vietnam and the Socialist Republic of Vietnam: Scope Clarification on Dusted Shrimp and Battered Shrimp (''Dusted/Battered Scope Memo''),* dated July 2, 2004.

and battered shrimp, the Department solicits comments from interested parties which enumerate and describe a clear, administrable definition of dusted shrimp. The Department considers these comments would be helpful in its evaluation of the disposition of the status of dusted shrimp. *See Dusted/Battered Scope Memo* at 23.

Selection of Respondents

Section 777A(c)(1) of the Act directs the Department to calculate individual dumping margins for each known exporter and producer of the subject merchandise. Section 777A(c)(2) of the Act provides the Department discretion, when faced with a large number of exporters/producers, however, to limit its examination to a reasonable number of such companies if it is not practicable to examine all companies. Where it is not practicable to examine all known producers/exporters of subject merchandise, this provision permits the Department to investigate either (1) a sample of exporters, producers, or types of products that is statistically valid based on the information available to the Department at the time of selection or (2) exporters/producers accounting for the largest volume of the merchandise under investigation that can reasonably be examined. After considering the complexities in this proceeding and its resources, the Department determined that it was not practicable in this investigation to examine all known producers/exporters of subject merchandise. *See Respondent Selection Memo* at 2. Instead, we limited our examination to the four exporters and producers accounting for the largest volume of the subject merchandise pursuant to section 777A(c)(2)(B) of the Act. The four Vietnamese producers/exporters (Minh Phu, Kim Ahn, Camimex and Minh Hai), accounted for a significant percentage of all exports of the subject merchandise from the Vietnam during the POI and were selected as mandatory respondents. *See Respondent Selection Memo* at 3.

Affiliations

Section 771(33)(E) of the Tariff Act of 1930, as amended (''the Act'') provides that the Department will find parties to be affiliated if any person directly or indirectly owns, controls, or holds with power to vote, five percent or more of the outstanding voting stock or shares of any organization and such organization; section 771(33)(F) provides that parties are affiliated if two or more persons directly or indirectly control, or are controlled by, or under common control with any other person; and section 771(33)(G) of the Act provides that parties are affiliated if any person controls any other person. To the extent that section 771(33) of the Act does not conflict with the Department's application of separate rates or enforcement of the NME provision, section 773(c) of the Act, the Department will determine that exporters and/or producers are affiliated if the facts of the case support such a finding. Therefore, we have examined whether Camimex and Jostoco are affiliated within the meaning of section 771(33) of the Act below.

Pursuant to 19 CFR 351.401(f), the Department will collapse producers and treat them as a single entity where (1) those producers are affiliated, (2) the producers have production facilities for producing similar or identical products that would not require substantial retooling of either facility in order to restructure manufacturing priorities, and (3) there is a significant potential for manipulation of price or production. In determining whether a significant potential for manipulation exists, the regulations provide that the Department may consider various factors, including (1) the level of common ownership, (2) the extent to which managerial employees or board members of one firm sit on the board of directors of an affiliated firm, and (3) whether the operations of the affiliated firms are intertwined. (*See Gray Portland Cement and Clinker From Mexico: Final Results of Antidumping Duty Administrative Review*, 63 FR 12764, 12774 (March 16, 1998) and *Final Determination of Sales at Less Than Fair Value: Collated Roofing Nails from Taiwan*, 62 FR 51427, 51436 (October 1, 1997)). Furthermore, we note that the factors listed in 19 CFR 351.401(f)(2) are not exhaustive, and, in the context of an NME investigation or administrative review, other factors unique to the relationship of business entities within the NME may lead the Department to determine that collapsing is either warranted or unwarranted, depending on the facts of the case. *See Hontex Enterprises, Inc.* v. *United States*, 248 F. Supp. 2d 1323, 1342 (CIT 2003) (noting that the application of collapsing in the NME context may differ from the standard factors listed in the regulation).

In summary, depending upon the facts of each investigation or administrative review, if there is evidence of significant ownership ties or control between or among producers which produce similar and/or identical merchandise but may not all produce their product for sale to the United States, the Department may find such evidence sufficient to apply the collapsing criteria in an NME context in order to determine whether all or some of those affiliated producers should be treated as one entity (*see Certain Hot-Rolled Carbon Steel Flat Products from the People's Republic of China, Preliminary Determination of Sales at Less Than Fair Value*, 66 FR 22183 (May 3, 2001) (''*Baosteel*'') as upheld by the Court of International Trade[5]). Therefore, based on the totality of the circumstances, the Department will collapse affiliated producers and treat them as a single entity where the criteria of 19 CFR 351.401(f) are met. Therefore, in this case, we have examined whether Camimex and Jostoco should be collapsed within the meaning of 19 CFR 351.401(f).

In this case, Camimex held a significant ownership share (*i.e.*, 51%) of Jostoco for the first four months of the POI. *See* Camimex's March 17, 2004, submission at Exhibit 5, and page 13. In addition, Camimex and Jostoco shared a company official, Mr. Tran Quang Chieu (''Mr. Chieu'') who was the Chairman of the Board of Management for Jostoco for the first four months of the POI, and was the Director of Camimex for the entire POI. *See* Camimex's April 23, 2004 submission at Exhibit 4, and page 25. Mr. Chieu's responsibilities as the Director of Camimex include (1) Building a production and marketing strategy; (2) highlighting areas of improvement; (3) overseeing company operations; (4) nominating managers; and (5) ensuring the general success of the company. *See* Camimex's March 17, 2004, submission at 11. At Jostoco Mr. Chieu's responsibilities as Chairman of the Board of Management included (1) representing Camimex's interest in Jostoco (Camimex received 51% of Jostoco's dividends due to its 51% ownership in Jostoco); and (2) convening Board of Management meetings. *See* Camimex's April 23, 2004, submission at 26. While day-to-day operations of Jostoco are the responsibility of the Director, the Board of Management, made up of the largest shareholders, appoints the Director. *See* Jostoco's March 17, 2004, submission at Exhibit 5 and page 8.

The Department's examination of the facts in this case are necessarily retrospective and reflective of the entire POI and not limited to merely the time before Camimex sold its shares to Jostoco. However, the Department finds that the record evidence demonstrates that Jostoco was affiliated with Camimex for the first four months of the POI in accordance with section

[5] *Anshan Iron & Steel Co.* v *United States*, 2003 Ct. Int'l Trade, Lexis 109,50, Slip Op. 2003–83 (July 26, 2003).

771(33)(E) of the Act for the reasons stated above. However, once Camimex sold its shares of Jostoco and Mr. Chieu ceased to be a Jostoco company official, there is no evidence on the record that the two companies were affiliated after that point. Therefore, based on the facts of record, we preliminarily find that Camimex and Jostoco were affiliated for the first four months of the POI under the meaning of section 771(33) of the Act.

Based on data contained in Camimex's and Jostoco's March 17, 2004, Section A responses, it is clear that Camimex and Jostoco produced frozen warmwater shrimp during the POI. Therefore, we find that the first and second collapsing criteria are met here because these companies were affiliated as explained above and have production facilities for producing similar or identical products that would not require substantial retooling in order to restructure manufacturing priorities. *See* factors of production data submitted by Camimex on April 21, 2004, and Jostoco on April 28, 2004, and Camimex's April 21, 2004, submission at Exhibit 5 and Jostoco's April 28, 2004, submission at Exhibit 4. Indeed, Camimex and Jostoco are required to produce frozen warmwater shrimp using substantially identical procedures and techniques (known as Hazard Analysis and Critical Point Control (''HACCP'') techniques) in order to sell shrimp in the United States. HACCP plans are required by the U.S. Food and Drug Administration to ensure food safety in the United States. The HACCP plan mandates each stage of processing and the requirements at each stage of processing. As stated by Camimex, ''the HACCP plan is the most comprehensive document setting forth the production process for each finished product.'' Both Camimex and Jostoco have stated that they follow HACCP procedures. *See* Camimex's April 21, 2004, submission at 4 and Jostoco's April 28, 2004 submission at 4.

However, we find that the third collapsing criterion has not been met in this case because a significant potential for manipulation of price or production no longer exists among Camimex and Jostoco. As explained above, there was a level of common ownership between and among these companies for the first four months of the POI which would facilitate the manipulation of prices; however, this relationship no longer exists. We note that Jostoco purchased frozen shrimp (subject merchandise) from Camimex and Jostoco sold fresh shrimp to Camimex. *See* Camimex's April 23, 2004, submission at 41 and Camimex's April 23, 2004, submission at Exhibit 6. This leads us to believe that the operations of Camimex and Jostoco during the first four months of the POI may have been intertwined. However, based on the circumstances during two months of the POI, in following the guidance of 19 CFR 351.401(f), that there is not a significant potential for manipulation of price or production between these parties. Consequently, collapsing these entities is not appropriate at this time.

Non-Market Economy Country

In a previous investigation, the Department has determined that Vietnam is an NME. *See Notice of Preliminary Determination of Sales at Less Than Fair Value, Affirmative Preliminary Determination of Critical Circumstances and Postponement of Final Determination: Certain Frozen Fish Fillets from the Socialist Republic of Vietnam*, 68 FR 214986 (January 31, 2003). In accordance with section 771(18)(C)(i) of the Tariff Act of 1930, as amended (''the Act''), the presumption of NME status remains in effect until revoked by the Department. *See Notice of Final Determination of Sales at Less Than Fair Value: Saccharin From the People's Republic of China*, 68 FR 27530 (May 20, 2003). The presumption of NME status for Vietnam has not been revoked by the Department and remains in effect for purposes of the initiation of this investigation.

On June 14, 2004, the GOV submitted comments regarding the Department's treatment of Vietnam as an NME. We appreciate the GOV's efforts in reforming their economy; however, while we appreciate being apprised by the GOV of their continued efforts in this matter, our law and process does not contemplate ongoing monitoring or review of developments in the Vietnamese economy in this context.

Therefore, for purposes of this preliminary determination, Vietnam has been treated as an NME country. In accordance with section 771(18)(C)(i) of the Act, any determination that a foreign country is an NME country shall remain in effect until revoked by the administering authority. *See also Tapered Roller Bearings and Parts Thereof, Finished and Unfinished, from the People's Republic of China: Preliminary Results 2001–2002 Administrative Review and Partial Rescission of Review*, 68 FR 7500 (February 14, 2003). When the Department is investigating imports from an NME, section 773(c)(1) of the Act directs us to base the normal value on the NME producer's factors of production, valued in an economically comparable market economy that is a significant producer of comparable merchandise. The sources of individual factor prices are discussed under the ''Factor Valuations'' section, below.

Surrogate Country

When the Department is investigating imports from an NME country, section 773(c)(1) of the Act directs it to base normal value (''NV''), in most circumstances, on the NME producer's factors of production, valued in a surrogate market-economy country or countries considered to be appropriate by the Department. In accordance with section 773(c)(4) of the Act, in valuing the factors of production, the Department shall utilize, to the extent possible, the prices or costs of factors of production in one or more market-economy countries that are at a level of economic development comparable to that of the NME country and are significant producers of comparable merchandise. The sources of the surrogate values we have used in this investigation are discussed under the NV section below.

The Department determined that Bangladesh, Pakistan, India, Indonesia, and Sri Lanka are countries comparable to Vietnam in terms of economic development. *See Memorandum from Ron Lorentzen to James Doyle: Antidumping Duty Investigation on Certain Frozen and Canned Warmwater Shrimp from the Socialist Republic of Vietnam*, dated March 9, 2004. We select an appropriate surrogate country based on the availability and reliability of data from the countries. *See Department Policy Bulletin No. 04.1: Non-Market Economy Surrogate Country Selection Process* (''*Policy Bulletin*''), dated March 1, 2004. In this case, we have found that Bangladesh is a significant producer of comparable merchandise, frozen and canned warmwater shrimp, and is at a similar level of economic development pursuant to section 733(c)(4) of the Act. *See Surrogate Country Memo* at 7. Since our issuance of the *Surrogate Country Memo*, we have not received comments from interested parties.

Separate Rates

In proceedings involving NME countries, the Department has a rebuttable presumption that all companies within the country are subject to government control and thus should be assessed a single antidumping duty rate. It is the Department's policy to assign all exporters of merchandise subject to investigation in an NME country this single rate unless an exporter can demonstrate that it is sufficiently independent so as to be entitled to a separate rate. The four

mandatory respondents and the Section A respondents have provided company-specific information and each has stated that it met the standards for the assignment of a separate rate.

We have considered whether each Vietnam company is eligible for a separate rate. The Department's separate-rate test is not concerned in general, with macroeconomic/border-type controls, *e.g.,* export licenses, quotas, and minimum export prices, particularly if these controls are imposed to prevent dumping. The test focuses, rather, on controls over the investment, pricing, and output decision-making process at the individual firm level. *See Certain Cut-to-Length Carbon Steel Plate from Ukraine: Final Determination of Sales at Less than Fair Value*, 62 FR 61754, 61757 (November 19, 1997), and *Tapered Roller Bearings and Parts Thereof, Finished and Unfinished, from the People's Republic of China: Final Results of Antidumping Duty Administrative Review*, 62 FR 61276, 61279 (November 17, 1997).

To establish whether a firm is sufficiently independent from government control of its export activities to be entitled to a separate rate, the Department analyzes each entity exporting the subject merchandise under a test arising from the *Notice of Final Determination of Sales at Less Than Fair Value: Sparklers from the People's Republic of China*, 56 FR 20588 (May 6, 1991) (''*Sparklers*''), as amplified by *Notice of Final Determination of Sales at Less Than Fair Value: Silicon Carbide from the People's Republic of China*, 59 FR 22585 (May 2,1994) (''*Silicon Carbide*''). In accordance with the separate-rates criteria, the Department assigns separate rates in NME cases only if respondents can demonstrate the absence of both *de jure* and *de facto* governmental control over export activities.

1. Absence of *De Jure* Control

The Department considers the following *de jure* criteria in determining whether an individual company may be granted a separate rate: (1) An absence of restrictive stipulations associated with an individual exporter's business and export licenses; (2) any legislative enactments decentralizing control of companies; and (3) other formal measures by the government decentralizing control of companies. *See Sparklers*, 56 FR at 20589.

Our analysis shows that the evidence on the record supports a preliminary finding of *de jure* absence of governmental control for certain companies based on the following: (1) An absence of restrictive stipulations associated with the individual exporter's business and export licenses; (2) the applicable legislative enactments decentralizing control of the companies; and (3) any other formal measures by the government decentralizing control of companies. *See Memorandum to Edward C. Yang, Director, Non-Market Economy Unit, Import Administration, from Nicole Bankhead and Irene Gorelick, Case Analysts through James C. Doyle, Program Manager, Certain Frozen and Canned Warmwater Shrimp from the Socialist Republic of Vietnam: Separate Rates for Producers/Exporters that Submitted Questionnaire Responses*, dated July 2, 2004 (''*Separate-Rates Memo*'').

2. Absence of *De Facto* Control

Typically the Department considers four factors in evaluating whether each respondent is subject to de facto governmental control of its export functions: (1) Whether the export prices are set by or are subject to the approval of a governmental agency; (2) whether the respondent has authority to negotiate and sign contracts and other agreements; (3) whether the respondent has autonomy from the government in making decisions regarding the selection of management; and (4) whether the respondent retains the proceeds of its export sales and makes independent decisions regarding disposition of profits or financing of losses. *See Silicon Carbide*, 59 FR at 22586–87; *see also Notice of Final Determination of Sales at Less Than Fair Value: Furfuryl Alcohol From the People's Republic of China*, 60 FR 22544, 22545 (May 8, 1995). An analysis of de facto control is critical in determining whether respondents export activities are in fact subject to a degree of government control which would preclude the Department from assigning separate rates.

We determine that, for the mandatory respondents and certain Section A respondents, the evidence on the record supports a preliminary finding of de facto absence of governmental control based on record statements and supporting documentation showing the following: (1) Each exporter sets its own export prices independent of the government and without the approval of a government authority; (2) each exporter retains the proceeds from its sales and makes independent decisions regarding disposition of profits or financing of losses; (3) each exporter has the authority to negotiate and sign contracts and other agreements; and (4) each exporter has autonomy from the government regarding the selection of management. For a detailed discussion of the company-specific analysis, please see the *Separate Rates Memo*.

Therefore, the evidence placed on the record of this investigation by the mandatory respondents and certain Section A respondents demonstrates an absence of government control, both in law and in fact, with respect to each of the exporter's exports of the merchandise under investigation, in accordance with the criteria identified in *Sparklers* and *Silicon Carbide*. As a result, for the purposes of this preliminary determination, we have granted separate, company-specific rates to the mandatory respondents and certain Section A respondents which shipped certain frozen and canned warmwater shrimp to the United States during the POI. For a full discussion of this issue and list of Section A respondents, please see the *Separate-Rates Memo*.

Vietnam-Wide Rate

The Department has data that indicates there are more known exporters of the certain frozen and canned warmwater shrimp from Vietnam during the POI than responded to our quantity and value (''Q&V'') questionnaire. *See Respondent Selection Memo*. Although we issued the Q&V questionnaire to 12 known Vietnamese exporters of subject merchandise, we received Q&V questionnaire responses from thirty-eight companies, including those from the four mandatory respondents. In addition, we received thirty-eight Section A questionnaire responses by the due date. Although we received the exact same number of Q&V questionnaire responses as Section A questionnaire responses, we note that the companies who responded to the Q&V questionnaire did not necessarily respond to the Section A questionnaire. Also, on January 29, 2004, we issued a Section A questionnaire to the GOV. Although all exporters were given an opportunity to provide information showing they qualify for separate rates, not all of these other exporters provided a response to either the Department's Q&V questionnaire or its Section A questionnaire. Further, the GOV did not respond to the Department's questionnaire. Therefore, the Department determines preliminarily that there were exports of the merchandise under investigation from other Vietnam producers/exporters, which are treated as part of the countrywide entity.

Section 776(a)(2) of the Act provides that, if an interested party: (A) withholds information that has been requested by the Department, (B) fails to

provide such information in a timely manner or in the form or manner requested, subject to subsections 782(c)(1) and (e) of the Act, (C) significantly impedes a determination under the antidumping statute, or (D) provides such information but the information cannot be verified, the Department shall, subject to subsection 782(d) of the Act, use facts otherwise available in reaching the applicable determination.

Pursuant to section 782(e) of the Act, the Department shall not decline to consider submitted information if all of the following requirements are met: (1) The information is submitted by the established deadline; (2) the information can be verified; (3) the information is not so incomplete that it cannot serve as a reliable basis for reaching the applicable determination; (4) the interested party has demonstrated that it acted to the best of its ability; and (5) the information can be used without undue difficulties.

Information on the record of this investigation indicates that there are numerous producers/exporters of the certain frozen and canned warmwater shrimp in Vietnam. As described above, all exporters were given the opportunity to respond to the Department's questionnaire. Based upon our knowledge of the volume of imports of subject merchandise from Vietnam and the fact that information indicates that the responding companies did not account for all imports into the United States from Vietnam, we have preliminary determined that certain Vietnam exporters of certain frozen and canned warmwater shrimp failed to respond to our questionnaires. As a result, use of facts available (''FA'') pursuant to section 776(a)(2)(A) of the Act is appropriate. Additionally, in this case, the GOV did not respond to the Department's questionnaire, thereby necessitating the use of FA to determine the Vietnam-wide rate. *See Notice of Preliminary Determination of Sales at Less Than Fair Value, Affirmative Preliminary Determination of Critical Circumstances and Postponement of Final Determination: Certain Frozen Fish Fillets from the Socialist Republic of Vietnam*, 68 FR 4986 (January 31, 2003).

Section 776(b) of the Act provides that, in selecting from among the facts available, the Department may employ adverse inferences if an interested party fails to cooperate by not acting to the best of its ability to comply with requests for information. *See Notice of Final Determination of Sales at Less Than Fair Value: Certain Cold-Rolled Flat-Rolled Carbon-Quality Steel Products from the Russian Federation*, 65 FR 5510, 5518 (February 4, 2000), *See* also ''Statement of Administrative Action'' accompanying the URAA, H.R. Rep. No. 103–316, 870 (1994) (''SAA''). We find that, because the Vietnam-wide entity and certain producers/exporters did not respond at all to our request for information, they have failed to cooperate to the best of their ability. Therefore, the Department preliminarily finds that, in selecting from among the facts available, an adverse inference is appropriate.

In accordance with our standard practice, as adverse facts available (''AFA''), we have assigned to the Vietnam-wide entity the higher of the highest margin stated in the notice of initiation (*i.e.*, the recalculated petition margin) or the highest margin calculated for any respondent in this investigation. *See e.g., Notice of Final Determination of Sales at Less Than Fair Value: Certain Cold-Rolled Carbon Quality Steel Products from the Socialist Republic of Vietnam*, 65 FR 34660 (May 31, 2000), and accompanying decision memorandum at Comment 1. In this case, we have applied a rate of 93.13 percent, the highest rate calculated in the *Initiation Notice* of the investigation from information provided in the petition. *See, e.g., Notice of Preliminary Determination of Sales at Less Than Fair Value: Stainless Steel Wire Rod From Germany*, 63 FR 10847 (March 5, 1998).

Corroboration of Information

Section 776(b) of the Act authorizes the Department to use as AFA information derived from the petition, the final determination from the LTFV investigation, a previous administrative review, or any other information placed on the record.

Section 776(c) of the Act provides that, when the Department relies on secondary information rather than on information obtained in the course of an investigation as facts available, it must, to the extent practicable, corroborate that information from independent sources reasonably at its disposal. Secondary information is described in the SAA as ''information derived from the petition that gave rise to the investigation or review, the final determination concerning subject merchandise, or any previous review under section 751 concerning the subject merchandise.'' *See* SAA at 870. The SAA provides that to ''corroborate'' means simply that the Department will satisfy itself that the secondary information to be used has probative value. The SAA also states that independent sources used to corroborate may include, for example, published price lists, official import statistics and customs data, and information obtained from interested parties during the particular investigation. As explained in *Tapered Roller Bearings and Parts Thereof, Finished and Unfinished, from Japan, and Tapered Roller Bearings, Four Inches or Less in Outside Diameter, and Components Thereof, from Japan; Preliminary Results of Antidumping Duty Administrative Reviews and Partial Termination of Administrative Reviews,* 61 FR 57391, 57392 (November 6, 1996) (''Japan Notice''), to corroborate secondary information, the Department will, to the extent practicable, examine the reliability and relevance of the information used.

The Petitioners' methodology for calculating the export price and NV in the petition is discussed in the initiation notice. *See Initiation Notice,* 69 FR at 3876. To corroborate the AFA margin of 93.13 percent, we compared that margin to the margins we found for the respondents.

As discussed in the Memorandum to the File regarding the corroboration of the AFA rate, dated July 2, 2004, we found that the margin of 93.13 percent has probative value. *See Memorandum to the File from Alex Villanueva, Senior Case Analyst through James C. Doyle, Program Manager and Edward C. Yang, Director, NME Unit, Preliminary Determination in the Investigation of Certain Frozen and Canned Warmwater Shrimp from the Socialist Republic of Vietnam, Corroboration Memorandum (''Corroboration Memo''),* dated July 2, 2004. Accordingly, we find that the highest margin, based on the petition information as described above, of 93.13 percent is corroborated within the meaning of section 776(c) of the Act.

Consequently, we are applying a single antidumping rate—the Vietnam-wide rate—to producers/exporters that failed to respond to the Q&V questionnaire or Section A questionnaire, as well as to exporters which did not demonstrate entitlement to a separate rate. *See e.g., Final Determination of Sales at Less Than Fair Value: Synthetic Indigo from the Socialist Republic of Vietnam,* 65 FR 25706, 25707 (May 3, 2000). The Vietnam-wide rate applies to all entries of the merchandise under investigation except for entries from the four mandatory respondents and certain Section A respondents.

Because this is a preliminary margin, the Department will consider all margins on the record at the time of the final determination for the purpose of determining the most appropriate final

Vietnam-wide margin. *See Notice of Preliminary Determination of Sales at Less Than Fair Value: Saccharin from the People's Republic of China,* 67 FR 79049, 79053–54 (December 27, 2002).

Margins for Section A Respondents

The exporters which submitted responses to Section A of the Department's antidumping questionnaire and had sales of the subject merchandise to the United States during the POI, but were not selected as mandatory respondents in this investigation (Section A respondents), have applied for separate rates and provided information for the Department to consider for this purpose. Therefore, for the Section A respondents which provided sufficient evidence that they are separate from the countrywide entity and answered other questions in section A of the questionnaire, we have established a weighted-average margin based on the rates we have calculated for the four mandatory respondents, excluding any rates that are zero, *de minimis*, or based entirely on adverse facts available. Companies receiving this rate are identified by name in the ''Suspension of Liquidation'' section of this notice.

Date of Sale

Section 351.401(i) of the Department's regulations state that ''in identifying the date of sale of the subject merchandise or foreign like product, the Secretary normally will use the date of invoice, as recorded in the exporter or producer's records kept in the normal course of business.'' After examining the sales documentation placed on the record by the respondents, we preliminarily determine that invoice date is the most appropriate date of sale for all respondents. We made this determination because, the record evidence does not demonstrate that any alternative date of sale used by the respondent that establishes the material terms of sale. *See Saccharin from China,* 67 FR at 79054.

Appropriate Basis for Comparison

On May 24, 2004, the Department requested comments from interested parties on whether product comparisons and margin calculations in this investigation should be performed based on data provided on an ''as sold'' basis or whether those comparisons and calculations should be performed on data converted to a headless, shell-on (''HLSO'') basis.

On June 4, 2004, the Department received comments on HLSO comparison from Shantou Red Garden Foodstuff Co., Ltd. (''Red Garden''). On June 7, 2004, and June 10, 2004, the Department received comments from the Petitioners in support of subject merchandise on an HLSO basis. Red Garden argues that by valuing shrimp products on an HLSO basis, when a significant quantity of such products are not sold on an HLSO basis, effectively requires converting shrimp products from a non-HLSO basis to an HLSO basis by employing conversion coefficients to the quantities and values of the subject merchandise. This conversion method alters the count-sizes and prices of shrimp in many instances where count-size and prices were not sold on an HLSO basis, but were subsequently converted for this investigation to an HLSO basis. Several other comments were submitted by interested parties both in support of and in opposition to calculating a margin on an HLSO basis, although those comments pertained to the Department's market economy analysis of product comparisons in the U.S., home, and/or third country markets. Since the market economy methodology of product comparisons does not apply in NME investigations, those comments will be addressed in the preliminary determinations for the market economy countries subject to this investigation.

Section 773(c)(1)(B) of the Act requires that the Department value the factors of production that a respondent uses to produce the subject merchandise. The Department notes that it will be less accurate to rely on HLSO quantities sold and HLSO values of the subject merchandise, rather than relying on actual quantities sold and actual values of the subject merchandise.

The Petitioners argue that using an HLSO conversion method will give a consistent basis for weight-averaging the unit margins in the calculation of the overall weight-averaged margin. To achieve the consistent measuring basis, the Petitioners' suggest converting actual quantities and values of subject merchandise sold by HLSO coefficients to standardize the different types of subject merchandise sold.

The Department examined the Petitioners' suggested methodology, which seeks to achieve a consistent measuring standard by adjusting subject merchandise product values and yields on a HLSO basis. However, the Department's current NME methodology for calculating margins also achieves consistency through valuing subject merchandise on an actual, as sold basis. The Department notes that when calculating the estimated weighted-average margin, the Department totals the margins for all CONNUMs to derive the total dumping margin of the company. The values generated from totaling the margins and sales values for all CONNUMs do not require converting quantities to the same basis.

The Petitioners also argue that the CONNUM assignment should be altered to place more weight on the species of subject merchandise, as it is the species type that is a predominant factor in determining shrimp prices. However, the Department notes that the placement of the shrimp species category in the order of CONNUM assignments does not increase or decrease the weight given to that category in nonmarket economy margin calculations. In the NME margin calculation methodology, the CONNUM hierarchy is inconsequential to the normal value calculation, because each CONNUM characteristic is afforded equal weight when calculating CONNUM-specific normal values. However, as this issue is relevant to the market economy margin calculation methodology, this issue will be addressed by the preliminary determinations of the market economy countries subject to this investigation.

Fair Value Comparisons

To determine whether sales of certain frozen and canned warmwater shrimp to the United States of the four mandatory respondents were made at less than fair value, we compared export price (''EP'') to NV, as described in the ''U.S. Price'' and ''Normal Value'' sections of this notice.

U.S. Price

In accordance with section 772(a) of the Act, we used EP for four of the mandatory respondents because the subject merchandise was first sold (or agreed to be sold) before the date of importation by the producer or exporter of the subject merchandise outside of the United States to an unaffiliated purchaser in the United States or to an unaffiliated purchaser for exportation to the United States, and because the use of constructed export price was not otherwise indicated.

We calculated EP based on the Cost & Freight, Free on Board or delivered price to unaffiliated purchasers in, or for exportation to, the United States. We made deductions, as appropriate, for any movement expenses (*e.g.,* foreign inland freight from the plant to the port of exportation, international freight, marine insurance, cold-storage & warehousing, containerization and U.S. brokerage and handling) in accordance with section 772(c)(2)(A) of the Act. For a detailed description of all adjustments, see the company-specific analysis memorandum dated July 2, 2004. For a discussion of the surrogate

values used for the movements deductions, please see the *Memo to the File from Paul Walker through James C. Doyle, Program Manager to Edward C. Yang, Office Director, Regarding Factor Valuations (''Factor Valuation Memo''),* dated July 2, 2004 at 8–9 and at Exhibit 6.

For one Respondent, for certain sales, we used a starting EP price that differed from the gross unit invoice price that was used for the other Respondents because this Respondent demonstrated that its gross unit invoice price was not the price ultimately paid by one of its U.S. customers. Therefore, for U.S. sales made by this Respondent that were paid by this U.S. customers, we used an alternative price paid as provided in its U.S. sales database. For a detailed discussion of this issue, please see the company-specific analysis memorandum.

Headless, Shell-On (''HOSO'') Shrimp

In their initial C and D questionnaire responses, the Respondents submitted their factors of production on a basis other than HOSO because their payment for the fresh shrimp input was based on a non-HOSO basis. However, after analyzing the Respondents' data, the Department found that the Respondents should have provided the data on an HOSO basis. In supplemental questionnaires, the Department asked the Respondents to submit factors of production on an HOSO basis. In their supplemental questionnaire responses, the Respondents chose not to provide their factors of production on an HOSO basis, but instead provided company-specific conversion factors to adjust the non-HOSO basis factors of production to an HOSO basis. Because the surrogate value used to value fresh shrimp is on an HOSO basis, the Department recalculated the Respondents' fresh shrimp factor of production using the company-specific conversion factors. For a detailed discussion of the conversion factors, please see the company-specific analysis memorandums. However, for one Respondent, Kim Ahn, the Department did not receive a company-specific conversion factor to adjust the non-HOSO factors of production to an HOSO basis in the supplemental questionnaire response.

Partial Adverse Facts Available

With regard to Kim Ahn's HOSO conversion factor, we have applied partial AFA because Kim Ahn failed to provide the conversion factor for the HOSO conversion.

Section 776(a)(2) of the Act provides that if an interested party: (A) Withholds information that has been requested by the Department; (B) fails to provide such information in a timely manner or in the form or manner requested, subject to subsections 782(c)(1) and (e) of the Act; (C) significantly impedes a determination under the antidumping statute; or (D) provides such information but the information cannot be verified, the Department shall, subject to subsection 782(d) of the Act, use facts otherwise available in reaching the applicable determination. We note that all three other Respondents provided this information and that all four Respondents, including Kim Ahn, have a similar production process. In addition, Kim Ahn did not provide an estimate of this conversion factor in its response. Therefore, facts available are appropriate because Kim Ahn failed to provide an HOSO conversion factor in its supplemental questionnaire response.

Section 776(b) of the Act provides that, if the Department finds that an interested party ''has failed to cooperate by not acting to the best of its ability to comply with a request for information,'' the Department may use information that is adverse to the interests of that party as facts otherwise available.

Therefore, pursuant to section 776(b) of the Act, the Department finds that in selecting from among the facts available, an adverse inference is appropriate, as Kim Ahn failed to cooperate to the best of its ability by not providing the HOSO conversion factor because it chose not to report it or offer an estimate of this conversion factor.

Adverse inferences are appropriate ''to ensure that the party does not obtain a more favorable result by failing to cooperate than if it had cooperated fully.'' *See* Statement of Administrative Action (''SAA'') accompanying the URAA, H.R. Doc. No. 316, 103d Cong., 2d Session at 870 (1994). An adverse inference may include reliance on information derived from the petition, the final determination in the investigation, any previous review, or any other information placed on the record. *See* section 776(b) of the Act. We are applying the highest HOSO conversion factor reported by the three other Respondents.

Normal Value

Section 773(c)(1) of the Act provides that the Department shall determine the NV using a factors-of-production methodology if the merchandise is exported from an NME country and the information does not permit the calculation of NV using home-market prices, third-country prices, or constructed value under section 773(a) of the Act. The Department will base NV on factors of production because the presence of government controls on various aspects of these economies renders price comparisons and the calculation of production costs invalid under its normal methodologies.

For purposes of calculating NV, we valued the Vietnam factors of production in accordance with section 773(c)(1) of the Act. Factors of production include, but are not limited to hours of labor required, quantities of raw materials employed, amounts of energy and other utilities consumed, and representative capital costs, including depreciation. In examining surrogate values, we selected, where possible, the publicly available value which was an average non-export value, representative of a range of prices within the POI or most contemporaneous with the POI, product-specific, and tax-exclusive. We used the usage rates reported by respondents for materials, energy, labor, by-products, and packing. For a more detailed explanation of the methodology used in calculating various surrogate values, *see Factor Valuation Memo.*

Factor Valuations

We calculated NV based on factors of production reported by respondents for the POI. To calculate NV, we multiplied the reported per-unit factor quantities by publicly available Bangladesh surrogate values (except as discussed below). In selecting the surrogate values, we considered the quality, specificity, and contemporaneity of the data. As appropriate, we adjusted input prices by including freight costs to make them delivered prices. Specifically, we added to Bangladesh import surrogate values a surrogate freight cost using the shorter of the reported distance from the domestic supplier to the factory or the distance from the nearest seaport to the factory where appropriate. This adjustment is in accordance with the Court of Appeals for the Federal Circuit's decision in *Sigma Corp.* v. *United States,* 117 F. 3d 1401 (Fed. Cir. 1997). For a detailed description of all surrogate values used for respondents, see *Factor-Valuation Memo.*

With regard to surrogate values and the market-economy input values, we have disregarded prices that we have reason to believe or suspect may be subsidized. We have reason to believe or suspect that prices of inputs from Indonesia, South Korea, and Thailand may have been subsidized. We have found in other proceedings that these countries maintain broadly available, non-industry-specific export subsidies

and, therefore, it is reasonable to infer that all exports to all markets from these countries may be subsidized. *See Final Determination of Sales at Less Than Fair Value: Certain Helical Spring Lock Washers From The People's Republic of China and accompanying Issues and Decision Memorandum,* 61 FR 66255 (February 12, 1996) at Comment 1. The legislative history provides that in making its determination as to whether input value may be subsidized, the Department is not required to conduct a formal investigation, rather, Congress directed the Department to base its decision on information that is available to it at the time it makes its determination. *See* H.R. Rep. 100–576 at 590 (1988). Therefore, based on the information currently available, we have not used prices from these countries either in calculating the Indian import-based surrogate values or in calculating market-economy input values. In instances where a market-economy input was obtained solely from suppliers located in these countries, we used Bangladeshi import-based surrogate values to value the input.

Except as discussed below, the Department used United Nations ComTrade Statistics (''UN ComTrade''), provided by the United Nations Department of Economic and Social Affairs' Statistics Division, as its primary source of Bangladeshi surrogate value data.[6] The data represents cumulative values for the calendar year 2001, for inputs classified by the Harmonized Commodity Description and Coding System (''HS'') number. For each input value, we used the average value per unit for that input imported into Bangladesh from all countries the Department has not previously determined to be non-market economy (''NME'') countries. Import statistics from countries the Department has determined to be NME countries which subsidized exports (*i.e.*, Indonesia, Korea, Thailand) were excluded in the calculation of average value. *See Notice of Final Determination of Sales at Less Than Fair Value and Negative Final Determination of Critical Circumstances: Certain Color Television Receivers From the People's Republic of China (''CTVs from the PRC''),* 69 FR 20594 (April 16, 2004).

It is the Department's practice to calculate price index adjustors using the wholesale price index for the subject country. *See Notice of Preliminary Determination of Sales at Less Than Fair Value and Postponement of Final Determination: Hand Truck and Certain Parts Thereof from the People's Republic of China,* 69 FR 29509 (May 24, 2004). However, in this case, a wholesale price index was not available for Bangladesh. Therefore, where publicly available information contemporaneous with the POI with which to value factors could not be obtained, surrogate values were adjusted using the Consumer Price Index (''CPI'') rate for Bangladesh, as published in the *International Financial Statistics* (''*IFS*'') of the International Monetary Fund (''IMF'').

Certain surrogate values were calculated using data from the *2001 Statistical Yearbook of Bangladesh* (''Bangladesh Government Statistics''), published by the Bangladesh Bureau of Statistics, Planning Division, Ministry of Planning. The information represents cumulative values for the period of 2001. Unit values were initially calculated in takas/unit. Since the values from Bangladesh government statistics were not contemporaneous with the POI, we adjusted the rate for inflation and converted the values to USD/kg using the Department's exchange rate for Bangladesh.

Bangladeshi surrogate values denominated in foreign currencies were converted to USD using the applicable average exchange rate for Bangladesh for the POI. The average exchange rate was based on exchange rate data from the Department's Web site.

Raw Shrimp Surrogate Value

Certain Respondents explained that a small percentage of subject merchandise was produced using frozen shrimp and not fresh raw shrimp as the main input, which was used for an overwhelming majority of their U.S. sales. In supplemental questionnaires, we asked these Respondents to link their subject merchandise sales to the frozen shrimp input. Of the Respondents who purchased frozen shrimp as the input to produce the subject merchandise, only one Respondent was able to link its U.S. sale to the frozen shrimp input. However, an analysis of the factors of production for this U.S. sale demonstrates that the factors of production are identical to those CONNUMs for sales that did not use frozen shrimp as an input. In addition, this Respondent explained that once it received the frozen shrimp, it was thawed and processed similar to those that are fresh. However, the surrogate values submitted by Respondents for frozen shrimp did not include a surrogate value for the count size for this frozen shrimp input. Although we recognize that valuing the shrimp input on a frozen shrimp basis would be more accurate, we have preliminarily determined that we do not have the surrogate value for this count size, we will apply the HOSO raw shrimp surrogate value.

In addition, the Department notes that the value of the main input, HOSO shrimp, is an important factor of production in our dumping calculation as it accounts for a significant percentage of normal value. As a general matter, the Department prefers to use publicly available data to value surrogate values from the surrogate country to determine factor prices that, among other things: represent a broad market average; are contemporaneous with the POI; and are specific to the input in question. In this instance, none of the values placed on the record by the Respondents or the Petitioners wholly satisfies all three of these requirements.

The Department only considers using surrogate values outside the primary surrogate country if there are no values from that country available or if it decides that the values available are aberrational or otherwise unsuitable for use. The Respondents and the Petitioners have placed numerous Bangladeshi shrimp values on the record. In this case, the Department has found a suitable surrogate value for shrimp from the surrogate country. Therefore, using a surrogate value from a country other than one from Bangladesh is not necessary. Consequently, the Department did not use any shrimp values from a surrogate country other than Bangladesh.

The Department notes that the Petitioners and Respondents have argued at different times that count size is an important factor in the CONNUM creation. *See* Petitioners submission of February 4, 2004, at 3, and Respondents February 4, 2004, submission at Attachment 1. A review of the record shows that only the Respondents made an effort at creating count size shrimp valuations on the record. However, an analysis of the Respondents' count size methodology demonstrates that the final count size prices suggested by the Respondents relied upon numerous assumptions.

The Respondents began their count-size specific price analysis by using two prices, one for small shrimp and another for medium shrimp on a HOSO shrimp basis sold in Bangladeshi markets as obtained from the internet site of the Bangladeshi publication New Age Business. In order to convert these prices to count-size specific prices, the Respondents adjusted the New Age Business shrimp prices for medium and small shrimp to specific count sizes of shrimp using a definition of count sizes

[6] This can be accessed online at: *unstats.un.org/unsd/comtrade/.*

as provided by the Monterey Bay Aquarium. Specifically, the Respondents assigned the small Bangladeshi market price to count sizes 36/40 and 41/50 and the assigned the medium price to count sizes 51/60 and 61/70. In order to value the remaining count sizes, the Respondents calculated adjustments necessary to derive the Bangladeshi values of shrimp with count sizes larger than the medium 36/40 and 41/50 count sizes as well as those shrimp smaller than the 51/60 count size by using count size specific prices reported for Thai shrimp as offered by FoodmarketExhange.com for September 2003.

Consequently, based on the evidence on the record, the Department finds that the count-size specific surrogate value submitted by the Respondents is not the most appropriate basis for valuing the raw shrimp input. Although the Department would prefer to use count-size specific surrogate values for the raw shrimp input, because there are several assumptions the Respondents make in creating the index that call into question the reliability of their price for the shrimp input, we did not use it in our margin calculations. Although the Respondents began their count size prices with Bangladeshi prices, only two prices were obtained for small and medium shrimp. The Respondents did not have prices for large shrimp, which are being sold to the United States during the POI. In addition, the count size distribution proposed by the Respondents is from Monterey Bay Aquarium in the United States, not Bangladesh. Although the Respondents argue this distribution is similar to an industry standard, they did not provide evidence to show how this compares to count sizes in Bangladesh, the surrogate country. For example, New Age Business lists a Bangladeshi converted price for medium-sized shrimp, but does not specifically list a count size for medium-sized shrimp. This has led the Respondents to arbitrarily place the converted price for Bangladeshi medium-sized shrimp into a U.S. based count size range as provided by the Monterey Bay Aquarium.

A review of the data submitted by the Respondents shows that this index is not a broad market average and is contemporaneous with only one week of the POI. *See* Respondents May 21, 2004, submission at Exhibit 3. It is clear that the Respondents' newspaper prices (New Age Busines) do not represent a broad market average, rather, they represent price quotes which are subject to temporary market fluctuations. As the Respondents stated in their June 9, 2004, submission, the surrogate values for shrimp ''represent a range of price quotes available on the date the prices were obtained.'' *See* Respondents June 9, 2004, submission at 5. Broad market averages reflect values covering a substantial time frame making them less subject to temporary market fluctuations which would likely be reported in a newspaper. An example of this kind of fluctuation appears in the September 6, 2003, New Age Business article which includes statements that explain high or rising commodity prices as the result of disruption of trade with Myanmar. *See* Respondents May 21, 2004, submission at Exhibit 3.

In addition, we note that the basis for the prices used in this index are based on prices within Thailand, which is not one of the potential surrogate countries from the list provided by the Office of Policy. *See* the Department's March 12, 2004, letter to all interested parties concerning surrogate country selection.

Therefore, for the reasons stated above and because the HOSO shrimp surrogate price is critical to our analysis, we have chosen not to use the Respondents' index for this preliminary determination.

As a result, the Department valued raw, head-on, shell-on (''HOSO'') shrimp, the main input to the subject merchandise, using data from the financial statement of a Bangladeshi company that processes shrimp, Apex Foods Limited (''Apex''). The data from Apex is specific to the price of raw shrimp, the factor of production accounting for a significant percentage of normal value. In addition, the financial statement is contemporaneous for three months of the POI, April 1, 2003, to June 30, 2003. Additionally, we recognize that although this price is not count-size specific, the alternative count-size specific prices proposed by the Respondents are less reliable than the price from Apex. Specifically, we note that Apex's figure represents the average price of all shrimp purchased during a 12-month period which would capture any daily, weekly or monthly differences in prices during this 12-month period. The Department has relied upon prices from Apex's financial statements in prior investigations. *See Notice of Final Antidumping Duty Determination of Sales at Less Than Fair Value and Affirmative Critical Circumstances: Certain Frozen Fish Fillets from the Socialist Republic of Vietnam and accompanying Issues and Decision Memorandum,* (''*Fish Fillets*'') 68 FR 37116 (June 23, 2003) at Comment 14. For a discussion of other shrimp surrogate values, please see the *Factor Valuation Memo* at 4–6.

Other Factor Surrogate Values

To value phosphates, non-phosphates, salt and chlorine, we used UN ComTrade data as the primary source of Bangladeshi surrogate value data.

To value water, we used the average water tariff rate as reported in the Asian Development Bank's *Second Water Utilities Data Book: Asian and Pacific Region* (''ADB's *Water Utility Book*'') (1997), based on the average of the Bangladeshi taka per cubic meter (''m^3'') rate for two cities in Bangladesh. We adjusted the average cost of water for the two cities for inflation and converted the value to USD. *See Factor Valuation Memo* at Exhibit 4.

To value electricity, the Department used a rate of 1.94 taka/kwh from Bangladesh government statistics. As the rate was not contemporaneous with the POI, we adjusted the rate for inflation and converted the value to USD. *See Factor Valuation Memo* at Exhibit 8.

To value natural gas, the Department used a rate of 2060 taka/m^3 from Bangladesh government statistics. As the rate was not contemporaneous with the POI, we adjusted the rate for inflation and converted the value to USD. *See Factor Valuation Memo* at Exhibit 8.

To value diesel fuel, the Department used a rate of 13.88 taka/kg from Bangladesh government statistics. As the rate was not contemporaneous with the POI, we adjusted the rate for inflation and converted the value to USD. *See Factor Valuation Memo* at Exhibit 8.

Section 351.408(c)(3) of the Department's regulations requires the use of a regression-based wage rate. Therefore, to value the labor input, the Department used the regression-based wage rate for Vietnam published by Import Administration on our website. The source of the wage rate data is the *Yearbook of Labour Statistics 2001,* published by the International Labour Office (''ILO''), (Geneva: 2001), Chapter 5B: Wages in Manufacturing. *See* the Import Administration Web site: *http://ia.ita.doc.gov/wages/01wages/01wages.html.*

To value the by-products, the Department used a surrogate value for shrimp by-products based on a purchase price quote for wet shrimp shells from an Indonesian buyer of crustacean shells. Although we recognize that the Respondents reported by-products other than shells and that this surrogate value is not from Bangladesh, the primary surrogate, this information represents the best information on the record and is being used for this preliminary

determination. *See Factor Valuation Memo* at Exhibit 7.

To value packing materials, we used UN ComTrade data as the primary source of Bangladeshi surrogate value data.

To value factory overhead (''FOH''), Selling, General & Administrative (''SG&A'') expenses, and profit, we used the 2002–2003 financial statement of Apex Foods Limited (''Apex''), a Bangladeshi shrimp processor. *See Factor Valuation Memo* at Exhibit 9.

Critical Circumstances

On May 19, 2003, the petitioners alleged that there is a reasonable basis to believe or suspect critical circumstances exist with respect to the antidumping investigations of certain frozen and canned warmwater shrimp from Vietnam. On May 27, 2003, the respondents submitted comments on the petitioners' allegation of critical circumstances. In accordance with 19 CFR 351.206(c)(2)(i), because the petitioners submitted critical circumstances allegations more than 20 days before the scheduled date of the preliminary determination, the Department must issue preliminary critical circumstances determinations not later than the date of the preliminary determination.

Section 733(e)(1) of the Act provides that the Department will preliminarily determine that critical circumstances exist if there is a reasonable basis to believe or suspect that: (A)(i) there is a history of dumping and material injury by reason of dumped imports in the United States or elsewhere of the subject merchandise; or (ii) the person by whom, or for whose account, the merchandise was imported knew or should have known that the exporter was selling the subject merchandise at less than its fair value and that there was likely to be material injury by reason of such sales; and, (B) there have been massive imports of the subject merchandise over a relatively short period. Section 351.206(h)(1) of the Department's regulations provides that, in determining whether imports of the subject merchandise have been ''massive,'' the Department normally will examine: (i) the volume and value of the imports; (ii) seasonal trends; and (iii) the share of domestic consumption accounted for by the imports. In addition, section 351.206(h)(2) of the Department's regulations provides that an increase in imports of 15 percent during the ''relatively short period'of time may be considered ''massive.'' Section 351.206(i) of the Department's regulations defines ''relatively short period'' as normally being the period beginning on the date the proceeding begins (*i.e.*, the date the petition is filed) and ending at least three months later. The regulations also provide, however, that if the Department finds that importers, exporters, or producers had reason to believe, at some time prior to the beginning of the proceeding, that a proceeding was likely, the Department may consider a period of not less than three months from that earlier time.

In determining whether the relevant statutory criteria have been satisfied, we condisered (i) the evidence presented by the petitioners in their May 19, 2003, filing; (ii) new evidence obtained since the initiation of the less-than-fair-value (''LTFV'') investigation (*i.e.*, additional import statistics released by the U.S. Census Bureau); and (iii) the ITC's preliminary determination of material injury by reason of imports.

To determine whether there is a history of injurious dumping of the merchandise under investigation, in accordance with section 733(e)(1)(A)(i) of the Act, the Department normally considers evidence of an existing antidumping duty order on the subject merchandise in the United States or elsewhere to be sufficient. *See Preliminary Determination of Critical Circumstances: Steel Concrete Reinforcing Bars From Ukraine and Moldova*, 65 FR 70696 (November 27, 2000). With regard to imports of certain frozen and canned warmwater shrimp from Vietnam, the petitioners make no specific mention of a history of dumping for Vietnam. We are not aware of any antidumping order in the United States or in any country on certain frozen and canned warmwater shrimp from Vietnam. For this reason, the Department does not find a history of injurious dumping of the subject merchandise from Vietnam pursuant to section 733(e)(1)(A)(i) of the Act.

To determine whether the person by whom, or for whose account, the merchandise was imported knew or should have known that the exporter was selling the subject merchandise at less than its fair value and that there was likely to be material injury by reason of such sales in accordance with 733(e)(1)(A)(ii) of the Act, the Department normally considers margins of 25 percent or more for export price sales, or 15 percent or more for constructed export price transactions, sufficient to impute knowledge of dumping. *See Preliminary Determination of Sales at Less Than Fair Value: Certain Cut-to-Length Carbon Steel Plate from the People's Republic of China*, 62 FR 31972, 31978 (October 19, 2001).

In determining whether there are ''massive imports'' over a ''relatively short period,'' pursuant to section 733(e)(1)(B) of the Act, the Department normally compares the import volumes of the subject merchandise for at least three months immediately preceding the filing of the petition (*i.e.*, the ''base period'') to a comparable period of at least three months following the filing of the petition (*i.e.*, the ''comparison period''). However, as stated in section 351.206(i) of the Department's regulations, if the Secretary finds importers, exporters, or producers had reason to believe at some time prior to the beginning of the proceeding that a proceeding was likely, then the Secretary may consider a time period of not less than three months from that earlier time. Imports normally will be considered ''massive'' when imports during the comparison period have increased by 15 percent or more compared to imports during the base period.

For the reasons set forth in the *Critical Circumstances Memo*, we find that a sufficient basis exists for finding that importers, exporters, or producers knew or should have known an antidumping case was pending on certain frozen and canned shrimp imports from Vietnam by August 2003, at the latest. Therefore, in accordance with section 351.206(i) of the Department's regulations, we determine December 2002 through August 2003 should serve as the critical circumstances ''base period,'' while September 2003 through May 2004 should serve as the ''comparison period'' in determining whether or not imports have been massive in the comparison period.

In this case, the total volume of imports of certain frozen and canned warmwater shrimp from Vietnam increased 28.84 percent from the critical circumstances base period (December 2002 through August 2003) to the critical circumstances comparison period (September 2003 through May 2004).

For three of the Respondents and the Section A Respondents, we preliminarily determine that importers should have known that the exporter was selling the subject merchandise at less than its fair value and that there was likely to be material injury by reason of such sales in pursuant to 733(e)(1)(A)(ii) of the Act, because the calculated margins were not above 25 percent or more for export price sales which is sufficient to impute knowledge of dumping. In addition, the volume of imports of certain frozen and canned warmwater shrimp from these Respondents were not above 15 percent

See Critical Circumstance Memo at Attachment I. Therefore, we preliminarily determine that these Respondents's imports were not massive pursuant to 733(e)(1)(B) of the Act. Therefore, we preliminarily find that no critical circumstances exist.

For one Respondent, we preliminarily determine that importer had no reason to know that the exporter was selling the subject merchandise at less than its fair value and that there was likely to be material injury by reason of such sales pursuant to 733(e)(1)(A)(ii) of the Act, because the calculated margins were not above 25 percent or more for export price sales, which is sufficient to impute knowledge of dumping. However, the volume of imports of certain frozen and canned warmwater shrimp from this Respondent was above 15 percent *See Critical Circumstance Memo* at Attachment I. Although this Respondent had ''massive'' imports pursuant to 733(e)(1)(B) of the Act, the Department did not find that this Respondent had reason to know dumping existed. because its calculated dumping margin below 25 percent or more for export price sales as required under 733(e)(1)(A)(ii) of the Act. Therefore, we preliminarily find that no critical circumstances exist for this Respondent.

With regard to the Vietnam-wide entity, we preliminary find that the importer knew or should have known that the exporter was selling the subject merchandise at less than its fair value and that there was likely to be material injury by reason of such sales in accordance with 733(e)(1)(A)(ii) of the Act, because the Vietnam-wide margin is above 25 percent, which is sufficient to impute knowledge of dumping. However, the volume of imports of certain frozen and canned warmwater shrimp from the Vietnam-wide entity were not above 15 percent *See Critical Circumstance Memo* at Attachment I. Therefore, we preliminarily determine that the imports from the Vietnam-wide entity were not massive in accordance with 733(e)(1)(B) of the Act. Consequently, we preliminarily find that no critical circumstances exist.

Given the analysis summarized above, and described in more detail in the *Critical Circumstances Memo*, we preliminarily determine that critical circumstances do not exist for imports of certain frozen and canned warmwater shrimp from any exporters from Vietnam.

We will make a final determination concerning critical circumstances for all producers and exporters of subject merchandise from Vietnam when we make our final dumping determinations in this investigation, which will be 135 days after publication of the preliminary dumping determination.

Verification

As provided in section 782(i)(1) of the Act, we intend to verify the information upon which we will rely in making our final determination.

Preliminary Determination

The weighted-average dumping margins are as follows:

Manufacturer/exporter	Weighted-average margin (percent)
Certain Frozen and Canned Warmwater Shrimp from Vietnam—Mandatory Respondents	
Minh Phu	14.89
Kim Ahn	12.11
Camimex	19.60
Seaprodex Minh Hai	18.68
Vietnam-Wide Rate	93.13
Certain Frozen and Canned Warmwater Shrimp from Vietnam—Section A Respondents	
Amanda Foods (Vietnam) Ltd	16.01
C.P. Vietnam Livestock	16.01
Cai Doi Vam Seafood Import Export Company	16.01
Can Tho Agriculture and Animal Products Import Export Company	16.01
Cantho Animal Fisheries Product Processing Export Enterprise	16.01
Cuu Long Seaproducts Company	16.01
Danang Seaproducts Import Export Company	16.01
Hanoi Seaproducts Import Export Corp	16.01
Minh Hai Export Frozen Seafood Processing Joint-Stock Company	16.01
Minh Hai Seaproducts Co Ltd	16.01
Nha Trang Fisheries Joint Stock Company	16.01
Nha Trang Seaproduct Company	16.01
Pataya Food Industries (Vietnam) Ltd	16.01
Sao Ta Foods Joint Stock Company	16.01
Soc Trang Aquatic Products and General Import Export Company	16.01
Thuan Phuoc Seafoods and Trading Corporation	16.01
Viet Nhan Company	16.01

Disclosure

We will disclose the calculations performed within five days of the date of publication of this notice to parties in this proceeding in accordance with § 19 CFR 351.224(b).

Suspension of Liquidation

In accordance with section 733(d) of the Act, we will instruct CBP to suspend liquidation of all entries of subject merchandise, entered, or withdrawn from warehouse, for consumption on or after the date of publication of this notice in the **Federal Register**. Customs shall require a cash deposit or the posting of a bond equal to the estimated preliminary dumping margins reflected in the preliminary determinations published in the **Federal Register**. The suspension of liquidation will remain in effect until further notice.

International Trade Commission Notification

In accordance with section 733(f) of the Act, we have notified the ITC of the Department's preliminary affirmative determination of sales at less than fair value. Section 735(b)(2) requires that the ITC make a final determination before the later of 120 days after the date of the Department's preliminary determination or 45 days after the Department's final determination whether the domestic industry in the United States is materially injured, or threatened with material injury, by reason of imports of certain frozen and canned warmwater shrimp, or sales (or the likelihood of sales) for importation, of the subject merchandise. Because we have postponed the deadline for our final determination to 135 days from the date of publication of this preliminary determination, the ITC will make its final determination within 45 days of our final determination.

Public Comment

Case briefs or other written comments may be submitted to the Assistant Secretary for Import Administration no later than seven days after the date of the final verification report issued in this proceeding and rebuttal briefs limited to issues raised in case briefs, no later than five days after the deadline date for case briefs. A list of authorities used and an executive summary of issues should accompany any briefs submitted to the Department. This summary should be limited to five pages total, including footnotes.

In accordance with section 774 of the Act, we will hold a public hearing, if requested, to afford interested parties an opportunity to comment on arguments raised in case or rebuttal briefs. If a request for a hearing is made, we intend to hold the hearing three days after the deadline of submission of rebuttal briefs at the U.S. Department of Commerce, 14th Street and Constitution Avenue, NW., Washington, DC 20230, at a time and location to be determined. Parties should confirm by telephone the date, time, and location of the hearing two days before the scheduled date.

Interested parties who wish to request a hearing, or to participate if one is requested, must submit a written request to the Assistant Secretary for Import Administration, U.S. Department of Commerce, Room 1870, within 30 days after the date of publication of this notice. *See* 19 CFR 351.310(c). Requests should contain the party's name, address, and telephone number, the number of participants, and a list of the issues to be discussed. At the hearing, each party may make an affirmative presentation only on issues raised in that party's case brief and may make rebuttal presentations only on arguments included in that party's rebuttal brief.

We will make our final determination no later than 135 days after the date of publication of this preliminary determination, pursuant to section 735(a)(2) of the Act.

This determination is issued and published in accordance with sections 733(f) and 777(i)(1) of the Act.

Dated: July 2, 2004.

James J. Jochum,

Assistant Secretary for Import Administration.

[FR Doc. 04–16111 Filed 7–15–04; 8:45 am]

BILLING CODE 3510–DS–P

DEPARTMENT OF COMMERCE

International Trade Administration

[A–489–807]

Certain Steel Concrete Reinforcing Bars from Turkey; Notice of Extension of Time Limits for Final Results of Antidumping Duty Administrative Review

AGENCY: Import Administration, International Trade Administration, Department of Commerce.

SUMMARY: The Department of Commerce (the Department) is extending the time limit for the final results in the antidumping duty administrative review of certain steel concrete reinforcing bars from Turkey. This review covers three manufacturers/exporters of the subject merchandise to the United States. This is the fifth period of review (POR), covering April 1, 2002, through March 31, 2003.

DATES: Effective July 16, 2004.

FOR FURTHER INFORMATION CONTACT: Irina Itkin or Elizabeth Eastwood, Office of AD/CVD Enforcement, Office 2, Import Administration, International Trade Administration, U.S. Department of Commerce, 14th Street and Constitution Avenue, NW., Washington, DC 20230; telephone (202) 482–0656 and (202) 482–3874, respectively.

Statutory Time Limits

Section 751(a)(3)(A) of the Tariff Act of 1930, as amended (the Act) requires the Department of Commerce to make a final determination in an administrative review within 120 days after the date on which the preliminary determination is published. However, if it is not practicable to complete the review within this time period, section 751(a)(3)(A) of the Act allows the Department to extend the time limit for the final results to 180 days (or 300 days if the Department does not extend the time limit for the preliminary results) from the date of publication of the preliminary results.

Extension of the Time Limit for Final Results of Administrative Review

The Department issued the preliminary results of this administrative review of the antidumping duty order on certain steel concrete reinforcing bars from Turkey on May 5, 2004 (69 FR 10666). The current deadline for the final results in this review is September 2, 2004. In accordance with section 751(a)(3)(A) of the Act, and 19 CFR 351.213(h)(2), the Department finds that it is not practicable to complete the review within the original time frame because this review involves a number of complicated issues for certain of the respondents, including affiliated producers and high inflation in Turkey during the POR. Moreover, one respondent, ICDAS Celik Enerji Tersane ve Ulasim Sanayi, A.S., has requested revocation in this review. Analysis of these issues requires additional time.

Because it is not practicable to complete this administrative review within the time limit mandated by section 751(a)(3)(A) of the Act and 19 CFR 351.213(h)(2), the Department is extending the time limit for completion of the final results of this administrative review until November 1, 2004.

Dated: July 8, 2004.

Jeffrey A. May,

Deputy Assistant Secretary for Import Administration, Group I.

[FR Doc. 04–16127 Filed 7–15–04; 8:45 am]

BILLING CODE 3510–DS–P

DEPARTMENT OF COMMERCE

International Trade Administration

Catawba College, et al.; Notice of Consolidated Decision on Applications for Duty-Free Entry of Electron Microscopes

This is a decision consolidated pursuant to section 6(c) of the Educational, Scientific, and Cultural Materials Importation Act of 1966 (Pub. L. 89–651, 80 Stat. 897; 15 CFR part 301). Related records can be viewed between 8:30 a.m. and 5 p.m. in Suite 4100W, Franklin Court Building, U.S. Department of Commerce, 1099 14th Street, NW., Washington, DC.

Docket Number: 04–011. *Applicant:* Catawba College, Salisbury, NC 28114.

Instrument: Electron Microscope, Model JEM–1011. *Manufacturer:* JEOL, Japan. *Intended Use: See* notice at 69 FR 34654, 2004. *Order Date:* December 16, 2003.

Docket Number: 04–012. *Applicant:* University of Los Angeles, Los Angeles, CA 90095–1547. *Instrument:* Dual Beam Electron Microscope/Focused Ion Beam Milling Machine, Model Nova 600 Nanolab. *Manufacturer:* Fei Company, the Netherlands. *Intended Use: See* notice at 69 FR 34654, June 22, 2004. *Order Date:* August 6, 2003.

Comments: None received. *Decision:* Approved. No instrument of equivalent scientific value to the foreign instrument, for such purposes as these instruments are intended to be used, was being manufactured in the United States at the time the instruments were ordered. *Reasons:* Each foreign instrument is a conventional transmission electron microscope (CTEM) and is intended for research or scientific educational uses requiring a CTEM. We know of no CTEM, or any other instrument suited to these purposes, which was being manufactured in the United States either at the time of order of each instrument OR at the time of receipt of application by U.S. Customs and Border Protection.

Gerald A. Zerdy,

Program Manager, Statutory Import Programs Staff.

[FR Doc. 04–16129 Filed 7–15–04; 8:45 am]

BILLING CODE 3510–DS–P

DEPARTMENT OF COMMERCE

International Trade Administration

Cornell University; Notice of Consolidated Decision on Applications for Duty-Free Entry of Scientific Instruments

This is a decision consolidated pursuant to section 6(c) of the Educational, Scientific, and Cultural Materials Importation Act of 1966 (Pub. L. 89–651, 80 Stat. 897; 15 CFR part 301). Related records can be viewed between 8:30 a.m. and 5 p.m. in Suite 4100W, Franklin Court Building, U.S. Department of Commerce, 1099 14th Street, NW., Washington, DC.

Comments: None received. *Decision:* Approved. No instrument of equivalent scientific value to the foreign instruments described below, for such purposes as each is intended to be used, is being manufactured in the United States.

Docket Number: 04–010. *Applicant:* Cornell University, Ithaca, NY 14853. Instrument: X-ray Double Crystal Monochrometer. *Manufacturer:* Kohzu Precision Co.,Ltd., Japan. *Intended Use: See* notice at 96 FR 34654, June 22, 2004. *Reasons:* The foreign instrument provides immediate accommodation into the facility's existing crystal mounting system without any degradation in ultimate performance. Any domestic equivalent would require extensive design and might not guarantee performance. Advice received from: The National Institutes of Health, June 28, 2004.

Docket Number: 04–013 *Applicant:* Cornell University, Ithaca, NY 14853. *Instrument:* X-ray Mirror Focusing System, Model Ne Cat. *Manufacturer:* Oxford-Danfysik, United Kingdom. *Intended Use: See* notice at 69 FR 34654, June 22, 2004. *Reasons:* The foreign instrument provides that both the horizontal and the vertical focusing mirrors can be located in the same vacuum vessel. This is required to provide adequate focusing and bending of the X-ray beam. *Advice received from:* The National Institutes of Health, June 28, 2004.

The capabilities of each of the foreign instruments described above are pertinent to each applicant's intended purpose and we know of no domestic instrument or apparatus of equivalent scientific value for the intended use of each instrument.

We know of no other instrument or apparatus being manufactured in the United States which is of equivalent scientific value to any of the foreign instruments.

Gerald A. Zerdy,

Program Manager, Statutory Import Programs Staff.

[FR Doc. 04–16128 Filed 7–15–04; 8:45 am]

BILLING CODE 3510–DS–P

DEPARTMENT OF COMMERCE

International Trade Administration

[Docket 040621190–4190–01]

Drug Pricing Study

AGENCY: International Trade Administration, Commerce.

ACTION: Notice of hearing.

SUMMARY: Information is sought related to a study of international drug pricing, mandated by Section 1123 of the Medicare Prescription Drug, Improvement and Modernization Act of 2003 (the Act). This information will contribute to a report on trade in pharmaceuticals, focusing on the drug pricing practices of countries that are members of the Organization for Economic Cooperation and Development (OECD) (specifically Canada, Poland, France, Germany, United Kingdom, Japan, Switzerland, Greece, Australia, Korea, and Mexico) and the effects of those practices on drug pricing in the United States, research and development, and innovation. The Department is therefore holding a public hearing on August 3, 2004, and requesting written testimony in advance of the hearing.

DATES: Notification of intent to testify and written testimony should be submitted no later than 5 p.m. August 2, 2004. The hearing will be conducted on: August 3, 2004. For members of the public who are unable to attend the public hearing or who wish to submit rebuttal comments, ITA will accept comments from August 3 until August 13, 2004.

ADDRESSES: Schedule time for testimony and submit written testimony through Kristie Mikus: Department of Commerce, 14th and Constitution Avenue, Room 4053, Washington, DC 20230, e-mail *drugpricing@ita.doc.gov*; telephone (202) 482–0131; fax (202) 482–2565. The hearing will be conducted at: Department of Commerce, 14th and Constitution Avenue, Room 3407, Washington, DC 20230, on August 3, 2004.

FOR FURTHER INFORMATION CONTACT: For further information, please contact Kristie Mikus at (202) 482–0131 or at *drugpricing@ita.doc.gov.*

SUPPLEMENTARY INFORMATION: The International Trade Administration (ITA) publishes this notice of a public hearing to solicit information, as mandated by the Act. The hearing will take place on August 3, 2004 at 9 a.m. at the Department of Commerce, 14th and Constitution Avenue, Room 3407, Washington, DC, and will conclude at 5 p.m. or the close of business.

The Act directs the President's designees to conduct a study and report on issues related to trade and pharmaceuticals. Public Law 108–173, 117 Stat. 2066, 2469. Legislative history provides additional information concerning Congress' intent on the matter. Specifically, Conference Report 108–391 directs the Secretary of Commerce, in consultation with the International Trade Commission, the Secretary of Health and Human Services and the U.S. Trade Representative, to conduct a study and produce a report on trade in pharmaceuticals, focusing on the drug pricing practices of countries that are members of the OECD. Specifically, the Conference Report to the Act states:

''Report on Trade in Pharmaceuticals''

The Conference agreement directs the Secretary of Commerce, in consultation with the International Trade Commission, the Secretary of Health and Human Services and the United States Trade Representative, to conduct a study and report on drug pricing practices of countries that are members of the Organization for Economic Cooperation and Development and whether those practices utilize non-tariff barriers with respect to trade in pharmaceuticals. The study shall include an analysis of the use of price controls, reference pricing, and other actions that affect the market access of United States pharmaceutical products.

The study shall include the following:

Identification of the countries that use price controls or other such practices with respect to pharmaceutical trade.

Assessment of the price controls and other such practices used by the countries identified.

Estimate of additional costs to U.S. consumers because of such price controls and other such practices, and the extent to which additional costs would be reduced for U.S. consumers if price controls and other such practices are reduced or eliminated.

Estimate of the impact such price controls, intellectual property laws, and other such measures have on fair pricing, innovation, generic competition, and research and development in the United States and each country identified.''

ITA previously published a Request for Comments on June 1, 2004, **Federal Register**, Volume 69, Number 105, Page 30882–30883. The comment period for this request for comments closed on July 1, 2004. However, additional information is needed to complete the report for Congress. Consequently, the Department is seeking input to the following questions. However, in responding to these questions, please feel free to also include any relevant additional information or input. Individual testimony will be limited to 15 minutes. Because of the finite amount of time available during the public hearing, ITA may not be able to accommodate everyone who expresses an interest in testifying at the hearing. Therefore, ITA will provide an additional comment period between August 3 and August 13 to allow the public to submit comments on the questions below or in response to testimonies.

- How do OECD countries set pharmaceutical prices? Within OECD countries, what mechanisms do governments use to control pharmaceutical expenditures?
- If price controls and other government cost control mechanisms were eliminated in OECD countries, how and to what degree would pharmaceutical prices and expenditures change? What effects would these changes have on the sales and profits of pharmaceutical manufacturers?
- How do patent laws and their application affect prices of patented drugs in OECD countries?
- If price controls and other government cost control mechanisms were eliminated in OECD countries, what effect would there be on U.S. consumers?
- What factors influence, and how do companies determine research and development (R&D) expenditures? How would R&D be affected by higher prices and revenues from sales in OECD countries?
- What is the relationship between increased R&D by pharmaceutical manufacturers and the introduction of new drugs?
- Could OECD countries reduce costs by increasing the use of generic drugs? What steps would the governments need to take to facilitate the use of generic drugs?
- Are there means by which OECD countries could improve incentives for developing innovative medicines without significantly increasing spending on drugs?

Once completed, the report produced by ITA will be submitted to Congress and made available to the public.

Dated: July 13, 2004.

Douglas B. Baker,

Deputy Assistant Secretary for Service Industries, Tourism and Finance for the Office of the Assistant Secretary for Trade Development.

[FR Doc. 04–16219 Filed 7–15–04; 8:45 am]

BILLING CODE 3510–25–P

DEPARTMENT OF COMMERCE

National Oceanic and Atmospheric Administration

Evaluation of Coastal Zone Management Programs and National Estuarine Research Reserves

AGENCY: Office of Ocean and Coastal Resource Management, National Ocean Service, National Oceanic and Atmospheric Administration (NOAA), DOC.

ACTION: Notice of intent to evaluate.

SUMMARY: The NOAA Office of Ocean and Coastal Resource Management (OCRM) announces its intent to evaluate the performance of the Hawaii Coastal Management Program; the Narragansett Bay National Estuarine Research Reserve, Rhode Island; the Minnesota Coastal Management Program; the Hudson River National Estuarine Research Reserve, New York; and the Washington Coastal Management Program and Padilla Bay National Estuarine Research Reserve, Washington.

The Coastal Zone Management Program evaluations will be conducted pursuant to section 312 of the Coastal Zone Management Act of 1972 (CZMA), as amended, and regulations at 15 CFR Part 923, Subpart L. The National Estuarine Research Reserve evaluations will be conducted pursuant to sections 312 and 315 of the CZMA and regulations at 15 CFR Part 921, Subpart E and Part 923, Subpart L.

The CZMA requires continuing review of the performance of states with respect to coastal program implementation. Evaluation of Coastal Zone Management Programs and National Estuarine Research Reserves requires findings concerning the extent to which a state has met the national objectives, adhered to its Coastal Management Program document or Reserve final management plan approved by the Secretary of Commerce, and adhered to the terms of financial assistance awards funded under the CZMA.

The evaluations will include a site visit, consideration of public comments, and consultations with interested Federal, state, and local agencies and members of the public. Public meetings will be held as part of the site visits.

Notice is hereby given of the dates of the site visits for the listed evaluations, and the dates, local times, and locations of the public meetings during the site visits.

The Hawaii Coastal Management Program evaluation site visit will be held August 23–27, 2004. One public meeting will be held during the week. The public meeting will be on Monday, August 23, 2004, at 6 p.m., at St. Andrew's Priory School, Kennedy Hall, Room K111, 224 Queen Emma Square, Honolulu, Hawaii.

The Narragansett Bay National Estuarine Research Reserve, Rhode Island, evaluation site visit will be held September 14–17, 2004. One public meeting will be held during the week. The public meeting will be on Wednesday, September 15, 2004, at 12 noon at 55 South Reserve Drive, Prudence Island, Rhode Island.

The Minnesota Coastal Management Program evaluation site visit will be held September 27–October 1, 2004. Two public meetings will be held during the week. The first public meeting will be on Monday, September 27, 2004, at 7 p.m., in the Large

Conference Room at the Minnesota Pollution Control Agency, 525 South Lake Avenue, Suite 400, Duluth, Minnesota. The second public meeting will be on Wednesday, September 29, 2004, at 6 p.m., in the Board Room at the Cook County Courthouse, 411 West Second Street, Grand Marais, Minnesota.

The Hudson River National Estuarine Research Reserve, New York, evaluation site visit will be held September 28–30, 2004. One public meeting will be held during the week. The public meeting will be on Wednesday, September 29, 2004, at 7 p.m., at the Tivoli Bays Visitor Center, Watts DePeyster Fireman's Hall, 1 Tivoli Commons, Tivoli, New York.

The Washington Coastal Management Program and Padilla Bay National Estuarine Research Reserve, Washington, joint evaluation site visit will be held September 27–October 1, 2004. One joint public meeting will be held during the week. The joint public meeting will be held on Wednesday, September 29, 2004, at 7 p.m., in the Evergreen Room, Washington State University Extension, 600 128th Street, SE., Everett, Washington.

Copies of states' most recent performance reports, as well as OCRM's notifications and supplemental request letters to the states, are available upon request from OCRM. Written comments from interested parties regarding these Programs are encouraged and will be accepted for each Program until 15 days after the last public meeting held for that Program. Please direct written comments to: Ralph Cantral, Chief, National Policy and Evaluation Division, Office of Ocean and Coastal Resource Management, NOS/NOAA, 1305 East-West Highway, N/ORM7, 10th Floor, Silver Spring, Maryland 20910. When the evaluations are completed, OCRM will place a notice in the **Federal Register** announcing the availability of the Final Evaluation Findings.

FOR FURTHER INFORMATION CONTACT: Ralph Cantral, Chief, National Policy and Evaluation Division, Office of Ocean and Coastal Resource Management, NOS/NOAA, 1305 East–West Highway, N/ORM7, 10th Floor, Silver Spring, Maryland 20910, (301) 713–3155, Extension 118.

Dated: July 12, 2004.

Eldon Hout,

Director, Office of Ocean and Coastal Resource Management.

Federal Domestic Assistance Catalog 11.419, Coastal Zone Management Program Administration.

[FR Doc. 04–16241 Filed 7–15–04; 8:45 am]

BILLING CODE 3510–08–U

DEPARTMENT OF COMMERCE

National Oceanic and Atmospheric Administration

[Docket No. 040702199–4199–01]

NOAA Strategic Plan

AGENCY: National Oceanic and Atmospheric Administration (NOAA), Commerce.

ACTION: Notice of intent to revised NOAA's Strategic Plan; request for comments.

SUMMARY: The National Oceanic and Atmospheric Administration (NOAA) is the premier United States agency for environmental assessment, prediction and management providing broad benefits to the national economy, public safety and environment. NOAA is drafting a strategic plan for the period 2005–2011 that builds on the NOAA Strategic Plan for 2003–2008 and reflects updated stakeholder priorities, recent external events, and change to NOAA's operations. This version of the plan is the result of over six months of data collection and evaluation. It establishes the goals for NOAA and the approaches taken to account for results. NOAA has sought advice from stakeholders at forums in San Diego on September 24, 2003, Seattle on January 12, 2004, and Washington, DC, on April 16, 2004, and at other meetings around the country. NOAA is now seeking broader public review of the Strategic Plan. NOAA encourages all stakeholders and users to revivew the Plan and provide comments. All comments received will be reviewed and considered in the final drafting of NOAA's Strategic Plan.

DATES: Public comments on t his document must be received at the appropriate mailing or e-mail address (*see* **ADDRESSES**) on or before 5 p.m., local time, August 27, 2004.

ADDRESSES: Send comments to Dr. James H. Butler, NOAA Strategic Planning Office, Office of Program Planning and Integration, National Oceanic and Atmospheric Administration (NOAA), Room 15755, 1315 East-West Highway, Silver Spring, MD 20910. Comments may be submitted via e-mail to *strategic.planning@noaa.gov*. The draft NOAA Strategic Plan has been posted at *http://www.spo.noaa.gov/*, and NOAA will post the final Strategic Plan at *http://www.spo.noaa.gov/*.

FOR FURTHER INFORMATION CONTACT: Mr. Joshua Lott, phone: 301–713–1622, Extension 210, fax: 301–713–0585.

Dated: July 13, 2004.

Mary M. Glackin,

NOAA Assistant Administrator for Program Planning and Integration.

[FR Doc. 04–16184 Filed 7–15–04; 8:45 am]

BILLING CODE 3510–NW–M

COMMITTEE FOR THE IMPLEMENTATION OF TEXTILE AGREEMENTS

Request for Public Comments on Commercial Availability of Certain Shirting Fabrics

July 13, 2004.

AGENCY: The Committee for the Implementation of Textile Agreements (CITA).

ACTION: Request for public comments concerning the commercial availability of certain shirting fabrics in the United States or another of the proposed United States-Central American Free Trade Agreement countries.

SUMMARY: On May 28, 2004, the Governments of the United States and five Central American countries signed the United States-Central American Free Trade Agreement (US-CAFTA). In a letter to the Government of Honduras in the context of the Agreement, the United States agreed to conduct an investigation to determine whether certain shirting fabrics are available in commercial quantities in a timely manner in the territory of any of the parties to the US-CAFTA. The United States agreed to make the results of the investigation available to Honduras before the entry into force of the US-CAFTA.

CITA hereby solicits public comments with regard to whether the 53 fabrics listed in the annex to this notice can be supplied by the industry in a US-CAFTA country in commercial quantities in a timely manner. A listing of the fabrics is also available online at http://otexa.ita.doc.gov. Comments must be submitted by August 16, 2004 to the Chairman, Committee for the Implementation of Textile Agreements, room 3001, United States Department of Commerce, 14th and Constitution Avenue, N.W. Washington, D.C. 20230.

FOR FURTHER INFORMATION CONTACT: Richard Stetson, International Trade Specialist, Office of Textiles and Apparel, U.S. Department of Commerce, (202) 482-3400.

SUPPLEMENTARY INFORMATION:

BACKGROUND:

On May 28, 2004, the Governments of the United States and five Central American countries signed the US-

CAFTA. In a letter to the Government of Honduras in the context of the Agreement, the United States agreed to conduct an investigation to determine whether certain shirting fabrics are available in commercial quantities in a timely manner in the territory of any of the parties to the US-CAFTA, namely: the United States, Costa Rica, El Salvador, Guatemala, Honduras and Nicaragua. The United States agreed to make the results of the investigation available to Honduras before the entry into force of the Agreement. The list of 53 subject fabrics is attached in an annex to this notice. A listing of the fabrics is also available online at http://otexa.

CITA is soliciting public comments with respect to whether these fabrics can be supplied by industry in a US-CAFTA country in commercial quantities in a timely manner. Comments must be received no later than August 16, 2004. Interested persons are invited to submit such comments or information to the Chairman, Committee for the Implementation of Textile Agreements, room 3001, United States Department of Commerce, 14th and Constitution Avenue, N.W. Washington, D.C. 20230.

CITA is particularly interested in detailed information regarding the ability to manufacture and supply the specific fabrics contained on the subject list, including the location of the manufacturing facility, the types of equipment available to manufacture the subject fabric, the quantity that can be supplied, the amount of the subject fabric that has been supplied in past years, the time necessary to fulfill an order for the subject fabric, and a square foot sample of the subject fabric that the manufacturer claims it can supply.

CITA will protect any business confidential information that is marked business confidential from disclosure to the full extent permitted by law.

D. Michael Hutchinson,

Acting Chairman, Committee for the Implementation of Textile Agreements.

ANNEX

Content	HTSUS#	how dyed / colored	Overall Construction	Fabric Construction		Yarn Count		Weave/Dye	Avg Yn#	GR/CM2	Threads CM/2
				Warp	Weft	Warp	Weft				
100% cotton	5208.23	piece dye white	133X72 CM40/1XCM40/1	133	72	40	40	twill piece dye	68	119.13	81
100% cotton	5208.33	piece dye color	133X72 CM40/1XCM40/1	133	72	40	40	twill piece dye	68	119.13	81
100% cotton	5208.43	yarns of different color	120X100 CM50/1XCM50/1	120	100	50	50	twill yarn dye	85	102.28	87
100% cotton	5208.43	yarns of different color	120X90 CM40/1XCM40/1	120	90	40	40	twill yarn dye	68	122.03	83
100% cotton	5208.43	yarns of different color	130X80 CM50/1XCM50/1	130	80	50	50	twill yarn dye	85	97.63	83
100% cotton	5208.43	yarns of different color	130X90 CM50/1XCM50/1	130	90	50	50	twill yarn dye	85	102.28	87
100% cotton	5208.43	yarns of different color	144X100 CM50/1XCM40/1	144	100	50	40	twill yarn dye	77	125.06	96
100% cotton	5208.43	yarns of different color	144X76 CM50/1XCM50/1	144	76	50	50	twill yarn dye	85	102.28	87
100% cotton	5208.43	yarns of different color	150X100 CM50/1XCM40/1	150	100	50	40	twill yarn dye	77	127.85	98
60% cotton/40% polyester	5210.22	piece dye white	130X90 45/1X45/1	130	90	45	45	twill piece dye	76	113.64	87
60% cotton/40% polyester	5210.32	piece dye color	130X90 45/1X45/1	130	90	45	45	twill piece dye	76	113.64	87
60% cotton/40% polyester	5210.42	yarns of different color	120X80 45/1X45/1	120	80	45	45	twill yarn dye	76	103.31	79
60% cotton/40% polyester	5210.42	yarns of different color	120X90 45/1X45/1	120	90	45	45	twill yarn dye	76	108.47	83
60% cotton/40% polyester	5210.42	yarns of different color	130X90 45/1X45/1	130	90	45	45	twill yarn dye	76	113.64	87
100% polyester	5512.11	piece dye white	120X80 P40/1XP40/1	120	80	40	40	plain weave piece dye	68	116.22	79
100% polyester	5512.19	piece dye color	120X80 P40/1XP40/1	120	80	40	40	plain weave piece dye	68	116.22	79
70% polyester / 30% cotton	5513.13	piece dye white	120X70 45/1 + P150DX45/1	120	70	45+150D	45	dobby piece dye	106	70.84	75
65% polyester / 35% cotton	5513.11	piece dye white	133X75 45/1X45/1	133	75	45	45	plain weave piece dye	76	107.44	82
65% polyester / 35% cotton	5513.11	piece dye white	135X72 45/1X45/1	135	72	45	45	plain weave piece dye	76	106.92	81
65% polyester / 35% cotton	5513.21	piece dye color	133X75 45/1X45/1	133	75	45	45	plain weave piece dye	76	107.44	82
65% polyester / 35% cotton	5513.21	piece dye color	135X72 45/1X45/1	135	72	45	45	plain weave piece dye	76	106.92	81
70% polyester / 30% cotton	5513.23	piece dye color	120X70 45/1 + P150DX45/1	120	70	45+150D	45	dobby piece dye	106	70.84	75
64% cotton / 36% polyester	5210.49	yarns of different color	130X80 45/1XP100D	130	80	45	100D	dobby yarn dye	81	102.14	83
55%rayon/45% polyester	5516.21	piece dye white	120X70 P75DXR32/1	120	70	75D	32	plain weave piece dye	83	90.21	75
55%rayon/45% polyester	5516.22	piece dye color	120X70 P75DXR32/1	120	70	75D	32	plain weave piece dye	83	90.21	75
100% cotton	5208.23	piece dye white	130X70 CM32/1XCM32/1	130	70	32	32	twill piece dye	54	145.28	79
100% cotton	5208.23	piece dye white	144X100 CM50/1XCM40/1	144	100	50	40	twill piece dye	77	125.06	96
100% cotton	5208.23	piece dye white	150X100 CM50/1XCM40/1	150	100	50	40	twill piece dye	77	127.85	98
100% cotton	5208.23	piece dye white	160X100 CM50/1XCM40/1	160	100	50	40	twill piece dye	77	132.49	102
100% cotton	5208.33	piece dye color	130X70 CM32/1XCM32/1	130	70	32	32	twill piece dye	54	145.28	79
100% cotton	5208.33	piece dye color	144X100 CM50/1XCM40/1	144	100	50	40	twill piece dye	77	125.06	96
100% cotton	5208.33	piece dye color	150X100 CM50/1XCM40/1	150	100	50	40	twill piece dye	77	127.85	98
100% cotton	5208.33	piece dye color	160X100 CM50/1XCM40/1	160	100	50	40	twill piece dye	77	132.49	102
100% polyester(Of text. Poly filaments)	5407.51	piece dye white	107X84 P75D/48FXP75D/48F	107	84	75D	75D	plain weave piece dye	120	62.65	75
100% polyester(Of text. Poly filaments)	5407.51	piece dye white	115X80 165DX165D	115	80	165D	165D	plain weave piece dye	55	140.72	77
100% polyester(Of text. Poly filaments)	5407.51	piece dye white	228X100 P75DXP210D	228	100	75D	210D	dobby piece dye	78	166.62	129
100% polyester(Of text. Poly filaments)	5407.52	piece dye color	107X84 P75D/48FXP75D/48F	107	84	75D	75D	plain weave piece dye	120	62.65	75
100% polyester(Of text. Poly filaments)	5407.52	piece dye color	115X80 165DX165D	115	80	165D	165D	plain weave piece dye	55	140.72	77
100% polyester(Of text. Poly filaments)	5407.52	piece dye color	228X100 P75DXP210D	228	100	75D	210D	dobby piece dye	78	166.62	129
50% polyester/50%modal rayon	5516.22	piece dye color	187X81 P50DXR30/1	187	81	50D	30	plain weave piece dye	102	103.65	106
80%rayon / 20% polyester	5516.22.0040	piece dye color	130X85 R30/1XP75D	130	85	30	75D	twill piece dye	66	128.61	85
55% modal rayon/45% polyester	5516.21	piece dye white	187X81 P50DXMR30/1	187	81	50D	30	plain weave piece dye	102	103.65	106
70% rayon / 30% polyester	5516.21	piece dye white	133X64 R30/1XP150D	133	64	30	150D	oxford piece dye	53	145.04	78
38%polyester/34%cotton/28%rayon	5516.22	piece dye color	120X70 RC32/1X40/1P + P200D	120	70	32	40+200D	dobby piece dye	67	111.61	75

53% rayon/47% polyester	5516.22	piece dye color	100X68 R30 + P150DXR30 + P150D	100	68	30+150D	30+150D	plain weave piece dye	111	59.68	66
55% modal rayon/45% polyester	5516.22	piece dye color	187X81 P50DXMR30/1	187	81	50D	30	plain weave piece dye	102	103.65	106
70% rayon/30% polyester	5516.22	piece dye color	133X64 R30/1XP150D	133	64	30	150D	oxford piece dye	53	145.04	78
65% rayon/35% polyester	5516.93	yarn dyed	90X70 30/1X30/1	90	70	30	30	plain weave yarn dye	51	123.97	63
55%rayon/45% cotton	5408.31	piece dye white	120X96 R120DXCM80/2	120	96	120D	80/2	twill piece dye	143	118.77	170
55%rayon/45% cotton	5408.32	piece dye color	120X96 R120DXCM80/2	120	96	120D	80/2	twill piece dye	143	118.77	170
55%rayon/45% cotton	5408.33	yarns of different color	120X96 R120DXCM80/2	120	96	120D	80/2	twill yarn dye	143	118.77	170
64% rayon / 36% cotton	5516.43	yarns of different color	120X80 RC32/1XRC32/1	120	80	32	32	twill yarn dye	54	145.28	79
64% rayon/36% cotton	5516.43	yarns of different color	90X70 RC30/1XRC30/1	90	70	30	30	plain weave yarn dye	51	123.97	63

KEY notations

CM	combed and mercerized
MR	model rayon
RC	rayon cotton
P	polyester
D	denier
F	# of filaments
# /1	single yarn
# /2	plyed yarn
P75D	polyester 75 denier
R120D	rayon 120 denier
JASPE	2 colored yarns plyed
T/C	polyester cotton intimate blend
P100D/48F	polyester 100 denier, 48 filaments
L40D	lycra monofilament 40 denier
R30/1	rayon 30 single

[FR Doc.04–16220 Filed 7–15–04; 8:45 am]

BILLING CODE 3510–DR–S

CORPORATION FOR NATIONAL AND COMMUNITY SERVICE

Proposed Information Collection; Comment Request

AGENCY: Corporation for National and Community Service.

ACTION: Notice.

SUMMARY: The Corporation for National and Community Service (hereinafter the ''Corporation''), as part of its continuing effort to reduce paperwork and respondent burden, conducts a preclearance consultation program to provide the general public and Federal agencies with an opportunity to comment on proposed and/or continuing collections of information in accordance with the Paperwork Reduction Act of 1995 (PRA95) (44 U.S.C. 3506(c)(2)(A)). This program helps to ensure that requested data can be provided in the desired format, reporting burden (time and financial resources) is minimized, collection instruments are clearly understood, and the impact of collection requirement on respondents can be properly assessed.

Currently, the Corporation is soliciting comments concerning its proposed revisions to the applications entitled: AmeriCorps*VISTA Concept Paper and AmeriCorps*VISTA Project Application. Copies of the proposed information collection requests may be obtained by contacting the office listed below in the **ADDRESSES** section of this notice.

DATES: Written comments on this notice must be submitted to the office listed in the **ADDRESSES** section by September 14, 2004.

The Corporation is particularly interested in comments which:

- Evaluate whether the proposed collection of information is necessary for the proper performance of the functions of the Corporation, including whether the information will have practical utility;
- Evaluate the accuracy of the agency's estimate of the burden of the proposed collection of information, including the validity of the methodology and assumptions used;
- Propose ways to enhance the quality, utility and clarity of the information to be collected; and
- Propose ways to minimize the burden of the collection of information on those who are to respond, including through the use of appropriate automated, electronic, mechanical, or other technological collection techniques or other forms of information technology, *e.g.*, permitting electronic submissions of responses.

ADDRESSES: You may submit written input to the Corporation by any of the following methods:

(1) Electronically through the Corporation's e-mail address system to Alison Fritz at *vista@americorps.org.*

(2) By fax to (202) 565–2789, Attention: Ms. Alison Fritz.

(3) By mail sent to: Corporation for National and Community Service, AmeriCorps*VISTA, 9th Floor, Attn: Ms. Alison Fritz, 1201 New York Avenue, NW., Washington, DC 20525.

(4) By hand delivery or by courier to the Corporation's mailroom at Room 6010 at the mail address given in paragraph (3) above, between 9 a.m. and 4 p.m. Monday through Friday, except Federal holidays.

FOR FURTHER INFORMATION CONTACT: Alison Fritz at (202) 606–5000, ext. 233, by e-mail at *vista@americorps.org.*

SUPPLEMENTARY INFORMATION:

I. Background

AmeriCorps*VISTA requires all applicant organizations to submit a Concept Paper and if approved, a Project Application including a budget when applying for AmeriCorps*VISTA resources.

II. Current Action

The Corporation seeks public comment on the forms, the instructions for the forms, and the instructions for the narrative portion of these application instructions.

Type of Review: Revision of a currently approved collection.

Agency: Corporation for National and Community Service.

Titles: AmeriCorps*VISTA Concept Paper and AmeriCorps*VISTA Project Application.

OMB Number: 3045–0038.

Agency Numbers: CNS1421a (concept paper) and CNS1421b (project application).

Affected Public: Eligible applicants for funding with the Corporation.

Total Respondents: 1700 for concept paper and 1500 for project application.

Frequency: Once for concept paper and annually for project application.

Average Time per Response: 1.5 hours for concept paper and 4 hours for project application.

Estimated Total Burden Hours: 8550 total (2550 hours for concept paper and 6000 hours for project application).

Total Burden Cost (Capital/Startup): None.

Total Burden Cost (Operating/Maintenance): None.

Comments submitted in response to this notice will be summarized and/or included in the request for Office of Management and Budget approval of the information collection request; they will also become a matter of public record.

Dated: July 12, 2004.

Howard Turner,

*Acting Director, AmeriCorps*VISTA.*

[FR Doc. 04–16137 Filed 7–15–04; 8:45 am]

BILLING CODE 6050–$$–P

DEPARTMENT OF DEFENSE

Department of the Air Force

Active Duty Service Determinations for Civilian or Contractual Groups

On May 26, 2004, the Secretary of the Air Force, acting as Executive Agent of the Secretary of Defense, determined that the service of the group known as the ''U.S. Civilian Crewmembers of the Flotilla Alaska Barge and Transport Company, Who Worked on the Inland and Coastal Waters of Vietnam as a Result of Contract MST–OT–35 (X) With the U.S. Navy for Direct Support of Military Operations in Vietnam From April 1966 Through April 1975'' shall not be considered ''active duty'' for purposes of all laws administered by the Department of Veterans Affairs (VA).

For further information contact Mr. James D. Johnston at the Secretary of the Air Force Personnel Council (SAFPC); 1535 Command Drive, EE Wing, 3d Fl.; Andrews AFB, MD 20762–7002.

Pamela D. Fitzgerald,

Air Force Federal Register Liaison Officer.

[FR Doc. 04–16166 Filed 7–15–04; 8:45 am]

BILLING CODE 5001–05–P

DEPARTMENT OF DEFENSE

Department of the Air Force

Intent To Grant a Partially-Exclusive Patent License

Pursuant to the provisions of part 404 of title 37, Code of Federal Regulations, which implements Public Law 96–517, as amended, the Department of the Air Force announces its intention to grant Input/Output Inc., a U.S. corporation, having a place of business at 12300 Parc Crest Drive, Stafford, Texas, USA, a partially-exclusive license, limited to ''* * * all applications within the oil and gas industry, worldwide * * *'', in any right, title and interest the Air Force has in: U.S. Patent 5,119,341, filed on July 17, 1991, and patented on June 2, 1992, entitled ''Method for Extending GPS to Underwater Applications,'' by

James W. Youngberg, inventor, a then employee of and assignor to the Department of the Air Force of his entire right, title and interest in said invention.

Any objection to the grant of the license must be submitted in writing and received within fifteen (15) days from the date of publication of this Notice in order to be considered. Written objection should be sent to: Air Force Research Laboratory Information Directorate, Office of the Staff Judge Advocate, AFRL/IFOJ, 26 Electronic Parkway, Rome, New York 13441–4515. Telephone: (315) 330–2087; facsimile (315) 330–7583.

Pamela D. Fitzgerald,

Air Force Federal Register Liaison Officer.

[FR Doc. 04–16167 Filed 7–15–04; 8:45 am]

BILLING CODE 5001–05–P

DEPARTMENT OF DEFENSE

Department of the Army; Corps of Engineers

Intent To Prepare One Environmental Impact Statement for the Combined Phase I and Phase II Elements of the Arkansas River Navigation Study, AR and OK

AGENCY: Department of the Army, U.S. Army Corps of Engineers, DoD.

ACTION: Notice of intent.

SUMMARY: Pursuant to the National Environmental Policy Act (NEPA), the U.S. Army Corps of Engineers (USACE), Little Rock District will prepare one Environmental Impact Statement (EIS) for the Arkansas River Navigation Study. The Arkansas River Navigation Study was originally a two-phase project. Phase I concentrated on river flow management aspects while Phase II focused on deepening and widening the Arkansas River navigation channel. The USACE has decided to combine the two phases into one proposed project to be evaluated in one EIS based on consideration of NEPA requirements and comments received from the public.

The combined EIS will generally focus on three aspects of maintaining and improving commercial navigation on the MKARNS: (1) River flow management, (2) channel deepening, and (3) on-going channel maintenance disposal. The purpose of the EIS will be to present all viable alternatives and assess the impacts associated with each alternative. The USACE is conducting this study under direction of the U.S. Congress. The study area includes the Arkansas river Basin in Arkansas and Oklahoma. Proposed improvements resulting from the study could impact (positively or negatively) agriculture, hydropower, recreation, flood control, and fish and wildlife along the MKARNS. The EIS will evaluate potential impacts (positive and negative) to the natural, physical, and human environment as a result of implementing any of the proposed project alternatives that may be developed during the EIS process.

ADDRESSES: Submit written comments by August 16, 2004 to Mr. Johnny McLean, Environmental Section, Planning Branch, P.O. Box 867, Little Rock, AR 72203–0867.

FOR FURTHER INFORMATION CONTACT: Questions or comments concerning the proposed action should be addressed to: Mr. Johnny McLean, Telephone 501–324–5028, e-mail: *Johnny.L.McLean@usace.army.mil.* All comments received during the Phase I and Phase II scoping periods are still on record and will be considered for the combined EIS. There is no need to re-submit duplicate comments.

SUPPLEMENTARY INFORMATION:

1. MKARNS: The McClellan-Kerr Arkansas River Navigation System consists of a series of 18 locks and dams (17 existing and 1 currently under construction) and provides navigation from the Mississippi River to the Port of Catoosa near Tulsa, OK. River flow in the Arkansas River is modified primarily by 11 reservoirs in Oklahoma. The reservoirs are: Keystone, Oologah, Pensacola, Hudson, Fort Gibson, Tenkiller Ferry, Eufaula, Kaw, Hulah, Copan, and Wister. These lakes provide flood control, water supply, hydropower, fish & wildlife, water quality, recreation, and other benefits.

2. Study History: The Arkansas River Navigation Study is being undertaken by USACE, Little Rock and Tulsa Districts under the direction of the U.S. Congress. The study includes major hydraulics investigations, economics analyses, alternatives development and related analyses in addition to the EIS.

3. Comments: Interested parties are requested to express their views concerning the proposed activity. The public is encouraged to provide written comments in addition to or in lieu of, oral comments at scoping meetings. To be most helpful, scoping comments should clearly describe specific environmental topics or issues, which the commentator believes the document should address. Oral and written comments receive equal consideration. Comments received as a result of this notice and the news releases will be used to assist the Districts in identifying potential impacts to the quality of the human or natural environment. Affected local, state, or Federal agencies, affected Indian Tribes, and other interested private organizations and parties may participate in the scoping process by forwarding written comments to the above noted address. Interested parties may also request to be included on the mailing list for public distribution of meeting announcements and documents.

4. Alternatives/Issues: The EIS will evaluate the effects modifying flow regimes, channel deepening, channel maintenance and other identified concerns. Anticipated significant issues to be addressed in the EIS include impacts on: (1) Navigation, (2) flooding, (3) hydropower production, (4) recreation and recreation facilities, (5) river hydraulics, (6) fish and wildlife resources and habitats, and (7) other impacts identified by the Public, agencies or USACE studies.

5. Availability of the Draft EIS: The Draft EIS is anticipated to be available for public review in the winter of 2004 subject to the receipt of federal funding.

6. Authority: The River and Harbor Act of 1946 authorized the development of the Arkansas River and its tributaries for the purposes of navigation, flood control, hydropower, water supply, recreation, and fish and wildlife. Public Law 91–649 stated that the project would be known as the McClellan-Kerr Arkansas River Navigation System. The Arkansas River Navigation Study began as a Fiscal Year (FY99) Congressional Add to investigate flooding problems along the Arkansas River in Crawford and Sebastian Counties in the vicinity of Fort Smith, AR.

Brenda S. Bowen,

Alternate Army Federal Register Liaison Officer.

[FR Doc. 04–16228 Filed 7–15–04; 8:45 am]

BILLING CODE 3710–57–M

DEPARTMENT OF DEFENSE

Department of the Army; Corps of Engineers

Intent To Prepare a Draft Supplemental Environmental Impact Statement for the Lower Rio Grande Basin, Texas, Flood Control and Major Drainage, Raymondville Drain Project

AGENCY: Department of the Army, U.S. Army Corps of Engineers, DOD.

ACTION: Notice of intent.

SUMMARY: The Raymondville Drain Project is part of the Lower Rio Grande Basin Project which was authorized by section 401 of the Water Resources and Development Act of 1986 (Pub. L. 99–

962). The proposed Draft Supplemental Environmental Impact Statement (DSEIS) will evaluate alternatives in the Raymondville Drain Project watershed to identify the most acceptable alternative to reduce and control flooding in Willacy and Hidalgo Counties, Texas. Alternatives are intended to provide flood protection and drainage to a watershed area of approximately 322 square miles including the City of Raymondville and surrounding rural and agricultural areas of Hildalgo and Willacy Counties. The local sponsor for the project is Hidalgo County Drainage District No. 1.

FOR FURTHER INFORMATION CONTACT: Questions about the proposed action and DSEIS can be answered by: Ms. Kristy Morten, Environmental Lead, P.O. Box 1229, Galveston, TX 77553–1229; fax: (409) 766–3064; e-mail: *kristy.l.morten@usace.army.mil.*

SUPPLEMENTARY INFORMATION:

1. Proposed Action. The DSEIS will be an integral part of a General Reevaluation Report (GRR) that will present the results of a new plan to provide flood control and agricultural drainage improvements to the City of Raymondville and Willacy and Hidalgo Counties, as authorized by the Water Resources Development Act of 1986 (WRDA 86). The Raymondville Drain is one of three elements of the authorized Lower Rio Grande Basin Project. The Phase 1 General Design Memorandum (GDM) and Programmatic EIS were completed in August 1982 and approved in the September 1982.

A Limited Reevaluation Report (LRR) completed in 1997 concluded that the Federal project for flood control and major drainage at Raymondville was still economically and environmentally feasible. However, Willacy County, the local sponsor, could not support the project because of financial reasons. Hildalgo and Willacy Counties have again expressed an interest in pursuing a flood control project under this authorization. Given the last LRR completion nearly 7 years ago, a GRR and SEIS will be completed by the Corps of Engineers in partnership with Hildalgo County Drainage District #1 as the Lead Sponsor to assure that the project recommended will be safe, functional, economically justified, and environmentally acceptable and that the requirements of the National Environmental Policy Act (NEPA) have been met.

2. Alternatives. The alternatives that will be evaluated in the GRR and SEIS include: (1) Non-structural measures that would include acquisition and removal, flood proofing, or raising of existing structures; (2) Channelization along the Raymondville Drain; (3) Earthen levees of various heights and lengths; (4) Combinations of the above measures; and (5) No action.

3. Scoping. The scoping process will involve Federal, State, and local agencies and other interested persons and organizations. A series of scoping meetings and workshops will be conducted in Hildalgo and Willacy Counties, Texas to discuss various issues associated with proposed flood protection and drainage measures. Initial Public Scoping Meetings will be held July 21, 2004 at the UTPA Center for Border Economic Study (IT2 Building) in Edinburg, TX from 7 pm–8:30 pm and July 22, 2004 at the Raymondville Public Library in Raymondville, TX from 7 pm–8:30 pm.

If you cannot attend the public meetings and have information or questions concerning the study, written comments will be accepted for 30 days following the meetings or until August 22, 2004.

4. Coordination. Further coordination with environmental agencies will be conducted under NEPA, the Fish and Wildlife Coordination Act, the Endangered Species Act, the Clean Water Act, the National Historic Preservation Act, the Magnuson-Stevens Fishery Conservation and Management Act (Essential Fish Habitat), Farmland Protection Policy Act and the Coastal Zone Management Act under the Texas Coastal Management Program.

5. DSEIS Preparation. It is estimated that the DEIS will be available to the public for review and comment in November 2007.

Carolyn E. Murphy,

Chief, Environmental Section.

[FR Doc. 04–16230 Filed 7–15–04; 8:45 am]

BILLING CODE 3710–52–M

DEPARTMENT OF DEFENSE

Department of the Army; Corps of Engineers

Intent To Prepare a Draft Supplemental Environmental Impact Statement (DSEIS) for the Atchafalaya Basin Floodway System Project, Buffalo Cove Management Unit, Located in Both St. Martin and Iberia Parishes, LA

AGENCY: Department of the Army, U.S. Army Corps of engineers, DOD.

ACTION: Notice of intent.

SUMMARY: The U.S. Army Corps of Engineers, New Orleans District (CEMVN), intends to evaluate water management features to improve water quality and interior water circulation, remove barriers to reestablish north to south water flow; provide input of oxygenated low temperature water; and reduce or manage sediment input into the interior swamp. The action is necessary due to the existing poor water quality resulting from the lack of internal circulation and oxygenated water inputs, and increased sedimentation. In addition if action is not taken, both deep-water and shallow water habitat utilized by fish and wildlife resources will continue to be lost, reduced, or degraded. The intended result of the proposed work is to prolong the life expectancy of the productive habitat (primarily aquatic and cypress tupelo habitats) that would become scarce over time by restricting or redirecting sediments, while simultaneously achieving a healthy water circulation pattern that would maintain or restore water quality and reestablish north to south water movement.

FOR FURTHER INFORMATION CONTACT: Questions concerning the DSEIS should be addressed to Mr. Larry Hartzog at U.S. Army Corps of Engineers, PM–RP, P.O. Box 60267, New Orleans, LA 70160–0267, phone (504) 862–2524, fax number (504) 862–2572 or by E-mail at *Larry.M.Hartzog@mvn02.usace.army.mi.*

SUPPLEMENTARY INFORMATION: The CEMVN, is initiating this DSEIS under the authority of the Flood Control Act of May 15, 1928 (Pub. L. 391, 70th Congress), as amended and supplemented. Construction of two pilot management units (Buffalo Cove and Henderson Lake) is authorized by the Supplemental Appropriations Act of 1985 (Pub. L. 99–88) and the Water Resources Development Act (WRDA) of 1986 (Pub. L. 99–662), with construction of three additional authorized management units (Flat Lake, Beau Bayou, and Cocodrie Swamp) to take place upon approval of the Chief of Engineers after evaluation of the operational success of the initial two pilot management units. WRDA 1986 authorized the USACE to carry out the recommended plan for management units as described in the Atchafalaya Basin Floodway System feasibility report and Environmental Impact Statement of 1982 and the subsequent Chief of Engineers Report dated February 28, 1983. Under this authority, an assessment of environmental impacts associated with the construction, operation, and maintenance of water management activities in the Buffalo Cove Management Unit will be made.

1. Proposed Act. The proposed action will consist of a series of closures and

sediment traps (to reduce sediment influx); construction of new, or improvement of existing inputs for river water; and gap construction in existing embankments. Closures will be placed in areas that have the greatest potential for introduction of sediment. Closure heights will be designed to optimize sediment reduction. Construction of water inputs will be evaluated in areas where sediment-lean, fresh water sources can be easily connected to existing canals or bayous to conduit water into areas of poor water quality. Sediment traps will be designed as necessary in conjunction with the freshwater input sites. Gaps will be sized and placed in both elevated natural banks as well as dredged material embankments that impede water flow or induce stagnation. These gaps are primarily intended to improve drainage and reestablish flow through the interior swamp basin. Excavated material will be either placed in a non-continuous manner in order to not disrupt sheet flow, or if practicable, the material will be used to create closures.

2. Alternatives. The alternative formulation process will include an evaluation of the ''no action alternative'', a monitored passive management plan, and the original structural alternative plan as proposed in the 1982 Atchafalaya Basin Floodway System Final Environmental Impact Statement which included construction of ring levees and active structures. The current alternative analysis will continue to evolve throughout the development of the DSEIS. Alternatives to be evaluated include different methods of sediment reduction, water input, and improving internal circulation with the management unit. Sediment reduction alternatives will include the use of various sediment trap sizes and placements, construction of sediment traps with and without maintenance, and monitoring the effectiveness of sediment reduction utilizing both partial and complete closures at sites of suspected sediment inputs. Alternative methods will also be evaluated for water introduction and include; diverse configurations of water inputs (sinuous, straight, length and depth), improvements to existing natural and manmade inlets, reopening natural and man-made inputs, and siting of bank shavings to reduce barriers to water input. In addition, various sizes, numbers and placement of gaps in existing canal banks, ridges and other internal circulation impediments will be considered in the alternatives.

3. Scoping Process. The Council on Environmental Quality regulations implementing the National Environmental Policy Act (NEPA) process directs Federal agencies that have made a decision to prepare an environmental impact statement to engage in a public scoping process. The scoping process is designed to provide an early and open means of determining the scope of issues (problems, needs, and opportunities) to be identified and addressed in the draft environmental impact assessment, which in this case is a DSEIS.

Scoping is the process used to: (a) Identify the affected public and agency concerns; (b) facilitate an efficient DSEIS preparation process; (c) define the issues and alternatives that will be examined in detail in the DSEIS; (d) and save time in the overall process by helping to ensure that the draft statements adequately address relevant issues. Scoping is a process, not an event or a meeting. It continues throughout the planning process for a DSEIS and may involve meetings, telephone conversations, and/or written comments. Scoping comments will be compiled, analyzed, and utilized in the plan formulation process. A scoping report, summarizing the comments, will be made available to all scoping participants in the initial scoping meetings and included in the public involvement appendix of the final Supplemental Environmental Impact Statement (FSEIS).

a. *Public Involvement.* Scoping is a critical component of the overall public involvement program. An intensive public involvement program will continue throughout the study to solicit input from affected Federal, state, and local agencies, native American tribes, and other interested parties. This public input will be obtained through a series of scoping meetings open to the general public. In addition to these meetings there will be additional continual public involvement through the Louisiana Department of Natural Resources Division's Atchafalaya Basin Advisory Committee meetings on Water Management. CEMVN personnel actively participate, contribute, and utilize information obtained from these meetings. CEMVN personnel will be available for additional informational meetings if needed or requested by various interested and or affected public, private and conservation interests such as: Landowners, oil and gas interests, commercial and recreational hunters and fishers, forestry interests, and the Sierra Club, Nature Conservancy, Audubon Society or other conservation organizations.

Significant Issues: The tentative list of resources and issues to be evaluated in the EIS includes forested wetlands (includes cypress/tupelo swamp as well as infrequently inundated areas of ash, oak, elm, hackberry and cypress), water quality, aquatic resources, commercial and recreational fisheries, wildlife resources, essential fish habitat, water quality, air quality, threatened and endangered species, recreation resources, and cultural resources. Socioeconomic items to be elevated in the EIS include employment, land use, property values, public/community facilities and services, community and regional growth, transportation, housing, community cohesion, and noise.

Ineragency Coordination. The Department of Interior, U.S.Fish and Wildlife Service (USFWS), will provide a Fish and Wildlife Coordination Act Report. Coordination will be maintained with the USFWS regarding threatened and endangered species. Coordination will be maintained with the National Resources Conservation Service regarding prime and unique farmlands. Coordination will be maintained with the Advisory Counsel on Historic Preservation and the State Historic Preservation Officer. The Louisiana Department of Natural Resources will be consulted regarding consistency with the Coastal Zone Management Act. The Louisiana Department of Wildlife and Fisheries will be contacted concerning potential impacts to Natural and Scenic Rivers and Streams. The Louisiana Department of Environmental Quality will review the action for consistency with applicable laws regarding the discharge of dredged material as it relates to impacting water quality and will provide the State of Louisiana Water Quality Certification.

d. *Environmental Consultation and Review.* The U.S. Fish and Wildlife Service (USFWS) will be assisting in the documentation of existing conditions and assessment of effects of project alternatives through Fish and Wildlife Coordination Act consultation procedures. The USFWS will provide a Fish and Wildlife Coordination Act report. Consultation will be accomplished with the USFWS and the National Marine Fisheries Service (NMFS) concerning threatened and endangered species and their critical habitat. The NMFS will be consulted on the effects of this proposed action on Essential Fish Habitat. The DSEIS or a notice of its availability will be distributed to all interested agencies, organizations, and individuals.

4. Three public scoping meetings are to be scheduled in 2004. Based on available funding the tentative meeting locations will be Baton Rouge, Lafayette and St. Martinville, LA. Exact dates and

meeting facility will be announced by public notice at a later date. The purpose of the scoping meeting is to provide the agencies and the interested public with the initial conceptual designs, preliminary designs known and designs under consideration for the proposed water management project for the Buffalo Cove Management Unit and issues concerning its construction and operation.

5. *Estimated Date of Availability.* Funding levels will dictate the date when the DEIS is available. The earliest that the DEIS is expected to be available is in the fall of 2006.

Dated: July 4, 2004.

Peter J. Rowan,

Colonel, U.S. Army, District Engineer.

[FR Doc. 04–16229 Filed 7–15–04; 8:45 am]

BILLING CODE 3710–84–M

DEPARTMENT OF EDUCATION

Notice of Proposed Information Collection Requests

AGENCY: Department of Education.

SUMMARY: The Leader, Regulatory Information Management Group, Office of the Chief Information Officer, invites comments on the proposed information collection requests as required by the Paperwork Reduction Act of 1995.

DATES: Interested persons are invited to submit comments on or before September 14, 2004.

SUPPLEMENTARY INFORMATION: Section 3506 of the Paperwork Reduction Act of 1995 (44 U.S.C. Chapter 35) requires that the Office of Management and Budget (OMB) provide interested Federal agencies and the public an early opportunity to comment on information collection requests. OMB may amend or waive the requirement for public consultation to the extent that public participation in the approval process would defeat the purpose of the information collection, violate State or Federal law, or substantially interfere with any agency's ability to perform its statutory obligations. The Leader, Regulatory Information Management Group, Office of the Chief Information Officer, publishes that notice containing proposed information collection requests prior to submission of these requests to OMB. Each proposed information collection, grouped by office, contains the following: (1) Type of review requested, *e.g.,* new, revision, extension, existing or reinstatement; (2) Title; (3) Summary of the collection; (4) Description of the need for, and proposed use of, the information; (5) Respondents and frequency of collection; and (6) Reporting and/or Recordkeeping burden. OMB invites public comment. The Department of Education is especially interested in public comment addressing the following issues: (1) Is this collection necessary to the proper functions of the Department; (2) will this information be processed and used in a timely manner; (3) is the estimate of burden accurate; (4) how might the Department enhance the quality, utility, and clarity of the information to be collected; and (5) how might the Department minimize the burden of this collection on the respondents, including through the use of information technology.

Dated: July 12, 2004.

Angela C. Arrington,

Leader, Regulatory Information Management Group, Office of the Chief Information Officer.

Office of Special Education and Rehabilitative Services

Type of Review: Extension.

Title: Projects with Industry Compliance Indicator Form and Annual Evaluation Plan.

Frequency: Annually.

Affected Public: Businesses or other for-profit; Not-for-profit institutions; State, Local, or Tribal Gov't, SEAs or LEAs.

Reporting and Recordkeeping Hour Burden:

Responses: 350.

Burden Hours: 13,500.

Abstract: The Projects with Industry compliance indicators are based on program regulations. The regulations: (1) Require that each grant application include a projected average cost per placement for the project (Section 379.21(c)); (2) designate two compliance indicators as ''primary'' and three compliance indicators as ''secondary'' (379.51(b) and (c)); (3) require a project to pass the two ''primary'' compliance indicators and any two of the three ''secondary'' compliance indicators to receive a continuation award (§ 379.50); and (4) change the minimum performance levels for three of the compliance indicators (§ 379.53(a)(1)—Placement Rate; § 379.53(a)(2)—Average Change in Earnings; and § 379.53(b)(3)—Average Cost per Placement). Section 379.21 of the program regulations contains the specific information the applicant must include in its grant application.

Requests for copies of the proposed information collection request may be accessed from *http://edicsweb.ed.gov*, by selecting the ''Browse Pending Collections'' link and by clicking on link number 2588. When you access the information collection, click on ''Download Attachments'' to view. Written requests for information should be addressed to U.S. Department of Education, 400 Maryland Avenue, SW., Potomac Center, 9th Floor, Washington, DC 20202–4700. Requests may also be electronically mailed to the Internet address *OCIO_RIMG@ed.gov* or faxed to 202–245–6621. Please specify the complete title of the information collection when making your request.

Comments regarding burden and/or the collection activity requirements should be directed to Sheila Carey at her e-mail address *Sheila.Carey@ed.gov.* Individuals who use a telecommunications device for the deaf (TDD) may call the Federal Information Relay Service (FIRS) at 1–800–877–8339.

[FR Doc. 04–16139 Filed 7–15–04; 8:45 am]

BILLING CODE 4000–01–P

DEPARTMENT OF EDUCATION

Notice of Proposed Information Collection Requests

AGENCY: Department of Education.

SUMMARY: The Leader, Regulatory Information Management Group, Office of the Chief Information Officer, invites comments on the proposed information collection requests as required by the Paperwork Reduction Act of 1995.

DATES: Interested persons are invited to submit comments on or before September 14, 2004.

SUPPLEMENTARY INFORMATION: Section 3506 of the Paperwork Reduction Act of 1995 (44 U.S.C. Chapter 35) requires that the Office of Management and Budget (OMB) provide interested Federal agencies and the public an early opportunity to comment on information collection requests. OMB may amend or waive the requirement for public consultation to the extent that public participation in the approval process would defeat the purpose of the information collection, violate State or Federal law, or substantially interfere with any agency's ability to perform its statutory obligations. The Leader, Regulatory Information Management Group, Office of the Chief Information Officer, publishes that notice containing proposed information collection requests prior to submission of these requests to OMB. Each proposed information collection, grouped by office, contains the following: (1) Type of review requested, *e.g.* new, revision, extension, existing or reinstatement; (2) Title; (3) Summary of the collection; (4) Description of the need for, and proposed use of, the information; (5)

Respondents and frequency of collection; and (6) Reporting and/or Recordkeeping burden. OMB invites public comment. The Department of Education is especially interested in public comment addressing the following issues: (1) Is this collection necessary to the proper functions of the Department; (2) will this information be processed and used in a timely manner; (3) is the estimate of burden accurate; (4) how might the Department enhance the quality, utility, and clarity of the information to be collected; and (5) how might the Department minimize the burden of this collection on the respondents, including through the use of information technology.

Dated: July 12, 2004.

Angela C. Arrington,

Leader, Regulatory Information Management Group, Office of the Chief Information Officer.

Office of Elementary and Secondary Education

Type of Review: New.

Title: Mathematics and Science Partnerships Program.

Frequency: Annually.

Affected Public: State, Local, or Tribal Gov't, SEAs or LEAs; Not-for-profit institutions.

Reporting and Recordkeeping Hour Burden:

Responses: 350.

Burden Hours: 19.

Abstract: This information will be collected annually for about 300–350 Mathematics and Science Partnerships (MSP) local MSP projects based on requirements in the enabling legislation.

Requests for copies of the proposed information collection request may be accessed from *http://edicsweb.ed.gov*, by selecting the ''Browse Pending Collections'' link and by clicking on link number 2587. When you access the information collection, click on ''Download Attachments'' to view. Written requests for information should be addressed to U.S. Department of Education, 400 Maryland Avenue, SW., Potomac Center, 9th Floor, Washington, DC 20202–4700. Requests may also be electronically mailed to the Internet address *OCIO_RIMG@ed.gov* or faxed to 202–245–6621. Please specify the complete title of the information collection when making your request.

Comments regarding burden and/or the collection activity requirements should be directed to Kathy Axt at her e-mail address *Kathy.Axt@ed.gov.* Individuals who use a telecommunications device for the deaf (TDD) may call the Federal Information Relay Service (FIRS) at 1–800–877–8339.

[FR Doc. 04–16140 Filed 7–15–04; 8:45 am]

BILLING CODE 4000–01–P

DEPARTMENT OF EDUCATION

Submission for OMB Review; Comment Request

AGENCY: Department of Education.

SUMMARY: The Leader, Regulatory Information Management Group, Office of the Chief Information Officer invites comments on the submission for OMB review as required by the Paperwork Reduction Act of 1995.

DATES: Interested persons are invited to submit comments on or before August 16, 2004.

ADDRESSES: Written comments should be addressed to the Office of Information and Regulatory Affairs, Attention: Carolyn Lovett, Desk Officer, Department of Education, Office of Management and Budget, 725 17th Street, NW., Room 10235, New Executive Office Building, Washington, DC 20503 or faxed to (202) 395–6974.

SUPPLEMENTARY INFORMATION: Section 3506 of the Paperwork Reduction Act of 1995 (44 U.S.C. Chapter 35) requires that the Office of Management and Budget (OMB) provide interested Federal agencies and the public an early opportunity to comment on information collection requests. OMB may amend or waive the requirement for public consultation to the extent that public participation in the approval process would defeat the purpose of the information collection, violate State or Federal law, or substantially interfere with any agency's ability to perform its statutory obligations. The Leader, Regulatory Information Management Group, Office of the Chief Information Officer, publishes that notice containing proposed information collection requests prior to submission of these requests to OMB. Each proposed information collection, grouped by office, contains the following: (1) Type of review requested, *e.g.,* new, revision, extension, existing or reinstatement; (2) Title; (3) Summary of the collection; (4) Description of the need for, and proposed use of, the information; (5) Respondents and frequency of collection; and (6) Reporting and/or Recordkeeping burden. OMB invites public comment.

Dated: July 12, 2004.

Angela C. Arrington,

Leader, Regulatory Information Management Group, Office of the Chief Information Officer.

Institute of Education Sciences

Type of Review: New.

Title: Evaluation of Educational Technology Interventions.

Frequency: Semi-Annually.

Affected Public: Individuals or household; Not-for-profit institutions.

Reporting and Recordkeeping Hour Burden:

Responses: 10,200.

Burden Hours: 23,280.

Abstract: The Evaluation of Educational Technology Interventions is a Congressionally mandated study addressing questions of whether the use of educational technology in classrooms improves student learning, and whether conditions and practices in classrooms are related to whether technology is effective. The study will randomly assign classrooms to use educational technology products to ensure that technology effects are measured using a scientifically rigorous design.

Requests for copies of the submission for OMB review; comment request may be accessed from *http://edicsweb.ed.gov*, by selecting the ''Browse Pending Collections'' link and by clicking on link number 2551. When you access the information collection, click on ''Download Attachments'' to view. Written requests for information should be addressed to U.S. Department of Education, 400 Maryland Avenue, SW., Potomac Center, 9th Floor, Washington, DC 20202–4700. Requests may also be electronically mailed to the Internet address *OCIO_RIMG@ed.gov* or faxed to 202–245–6621. Please specify the complete title of the information collection when making your request.

Comments regarding burden and/or the collection activity requirements should be directed to Kathy Axt at her e-mail address *Kathy.Axt@ed.gov.* Individuals who use a telecommunications device for the deaf (TDD) may call the Federal Information Relay Service (FIRS) at 1–800–877–8339.

[FR Doc. 04–16141 Filed 7–15–04; 8:45 am]

BILLING CODE 4000–01–P

DEPARTMENT OF EDUCATION

Submission for OMB Review; Comment Request

AGENCY: Department of Education

SUMMARY: The Leader, Regulatory Information Management Group, Office of the Chief Information Officer invites

comments on the submission for OMB review as required by the Paperwork Reduction Act of 1995.

DATES: Interested persons are invited to submit comments on or before August 16, 2004.

ADDRESSES: Written comments should be addressed to the Office of Information and Regulatory Affairs, Attention: Carolyn Lovett, Desk Officer, Department of Education, Office of Management and Budget, 725 17th Street, NW., Room 10235, New Executive Office Building, Washington, DC 20503 or faxed to (202) 395–6974.

SUPPLEMENTARY INFORMATION: Section 3506 of the Paperwork Reduction Act of 1995 (44 U.S.C. Chapter 35) requires that the Office of Management and Budget (OMB) provide interested Federal agencies and the public an early opportunity to comment on information collection requests. OMB may amend or waive the requirement for public consultation to the extent that public participation in the approval process would defeat the purpose of the information collection, violate State or Federal law, or substantially interfere with any agency's ability to perform its statutory obligations. The Leader, Regulatory Information Management Group, Office of the Chief Information Officer, publishes that notice containing proposed information collection requests prior to submission of these requests to OMB. Each proposed information collection, grouped by office, contains the following: (1) Type of review requested, *e.g.,* new, revision, extension, existing or reinstatement; (2) Title; (3) Summary of the collection; (4) Description of the need for, and proposed use of, the information; (5) Respondents and frequency of collection; and (6) Reporting and/or Recordkeeping burden. OMB invites public comment.

Dated: July 12, 2004.

Angela C. Arrington,

Leader, Regulatory Information Management Group, Office of the Chief Information Officer.

Office of the Undersecretary

Type of Review: New.

Title: Study of State Implementation of Accountability and Teacher Quality under NCLB.

Frequency: Biennially.

Affected Public: State, Local, or Tribal Gov't, SEAs or LEAs.

Reporting and Recordkeeping Hour Burden:

Responses: 208.

Burden Hours: 884.

Abstract: The purpose of this study is to track state implementation of policies and activities in the critical areas of standards, assessments and accountability, and teacher quality under No Child Left Behind (NCLB).

Requests for copies of the submission for OMB review; comment request may be accessed from *http://edicsweb.ed.gov*, by selecting the ''Browse Pending Collections'' link and by clicking on link number 2530. When you access the information collection, click on ''Download Attachments'' to view. Written requests for information should be addressed to U.S. Department of Education, 400 Maryland Avenue, SW., Potomac Center, 9th Floor, Washington, DC 20202–4700. Requests may also be electronically mailed to the Internet address *OCIO_RIMG@ed.gov* or faxed to 202–245–6621. Please specify the complete title of the information collection when making your request.

Comments regarding burden and/or the collection activity requirements should be directed to Katrina Ingalls at her e-mail address *Katrina.Ingalls@ed.gov*. Individuals who use a telecommunications device for the deaf (TDD) may call the Federal Information Relay Service (FIRS) at 1–800–877–8339.

[FR Doc. 04–16142 Filed 7–15–04; 8:45 am]

BILLING CODE 4000–01–P

DEPARTMENT OF EDUCATION

Notice of Proposed Information Collection Requests

AGENCY: Department of Education.

SUMMARY: The Acting Leader, Regulatory Information Management Group, Office of the Chief Information Officer, invites comments on the proposed information collection requests as required by the Paperwork Reduction Act of 1995.

DATES: Interested persons are invited to submit comments on or before September 14, 2004.

SUPPLEMENTARY INFORMATION: Section 3506 of the Paperwork Reduction Act of 1995 (44 U.S.C. Chapter 35) requires that the Office of Management and Budget (OMB) provide interested Federal agencies and the public an early opportunity to comment on information collection requests. OMB may amend or waive the requirement for public consultation to the extent that public participation in the approval process would defeat the purpose of the information collection, violate State or Federal law, or substantially interfere with any agency's ability to perform its statutory obligations. The Acting Leader, Regulatory Information Management Group, Office of the Chief Information Officer, publishes that notice containing proposed information collection requests prior to submission of these requests to OMB. Each proposed information collection, grouped by office, contains the following: (1) Type of review requested, *e.g.* new, revision, extension, existing or reinstatement; (2) Title; (3) Summary of the collection; (4) Description of the need for, and proposed use of, the information; (5) Respondents and frequency of collection; and (6) Reporting and/or Recordkeeping burden. OMB invites public comment. The Department of Education is especially interested in public comment addressing the following issues: (1) Is this collection necessary to the proper functions of the Department; (2) will this information be processed and used in a timely manner; (3) is the estimate of burden accurate; (4) how might the Department enhance the quality, utility, and clarity of the information to be collected; and (5) how might the Department minimize the burden of this collection on the respondents, including through the use of information technology.

Dated: July 13, 2004.

Jeanne Van Vlandren,

Acting Leader, Regulatory Information Management Group, Office of the Chief Information Officer.

Office of Postsecondary Education

Type of Review: Reinstatement.

Title: Report of Financial Need and Certification for the Jacob K. Javits Fellowship Program.

Frequency: Annually.

Affected Public: Not-for-profit institutions.

Reporting and Recordkeeping Hour Burden:

Responses: 100.

Burden Hours: 400.

Abstract: The Department of Education (ED) uses this form to collection financial need information of students who have Javits fellowships and certification of academic progress of Javits fellows from institutions where Javits fellows attend. ED uses the data to calculate fellowship amounts for individuals and the total amount of Program funds to be sent to the institution.

Requests for copies of the proposed information collection request may be accessed from *http://edicsweb.ed.gov*, by selecting the ''Browse Pending Collections'' link and by clicking on link number 2550. When you access the information collection, click on ''Download Attachments'' to view. Written requests for information should

be addressed to U.S. Department of Education, 400 Maryland Avenue, SW., Potomac Center, 9th Floor, Washington, DC 20202–4700. Requests may also be electronically mailed to the Internet address *OCIO_RIMG@ed.gov* or faxed to 202–245–6621. Please specify the complete title of the information collection when making your request.

Comments regarding burden and/or the collection activity requirements should be directed to Joseph Schubart at *Joe.Schubart@ed.gov*. Individuals who use a telecommunications device for the deaf (TDD) may call the Federal Information Relay Service (FIRS) at 1–800–877–8339.

[FR Doc. 04–16222 Filed 7–15–04; 8:45 am]

BILLING CODE 4000–01–P

DEPARTMENT OF EDUCATION

Submission for OMB Review; Comment Request

AGENCY: Department of Education.

SUMMARY: The Acting Leader, Regulatory Information Management Group, Office of the Chief Information Officer invites comments on the submission for OMB review as required by the Paperwork Reduction Act of 1995.

DATES: Interested persons are invited to submit comments on or before August 16, 2004.

ADDRESSES: Written comments should be addressed to the Office of Information and Regulatory Affairs, Attention: Carolyn Lovett, Desk Officer, Department of Education, Office of Management and Budget, 725 17th Street, NW., Room 10235, New Executive Office Building, Washington, DC 20503 or faxed to (202) 395–6974.

SUPPLEMENTARY INFORMATION: Section 3506 of the Paperwork Reduction Act of 1995 (44 U.S.C. Chapter 35) requires that the Office of Management and Budget (OMB) provide interested Federal agencies and the public an early opportunity to comment on information collection requests. OMB may amend or waive the requirement for public consultation to the extent that public participation in the approval process would defeat the purpose of the information collection, violate State or Federal law, or substantially interfere with any agency's ability to perform its statutory obligations. The Acting Leader, Regulatory Information Management Group, Office of the Chief Information Officer, publishes that notice containing proposed information collection requests prior to submission of these requests to OMB. Each proposed information collection, grouped by office, contains the following: (1) Type of review requested, *e.g.* new, revision, extension, existing or reinstatement; (2) Title; (3) Summary of the collection; (4) Description of the need for, and proposed use of, the information; (5) Respondents and frequency of collection; and (6) Reporting and/or Recordkeeping burden. OMB invites public comment.

Dated: July 13, 2004.

Jeanne Van Vlandren,

Acting Leader, Regulatory Information Management Group, Office of the Chief Information Officer.

Office of Postsecondary Education

Type of Review: Extension.

Title: Final Performance Report for the Jacob K. Javits Fellowship Program.

Frequency: Annually.

Affected Public: Not-for-profit institutions; Businesses or other for-profit.

Reporting and Recordkeeping Hour Burden:

Responses: 115.

Burden Hours: 690.

Abstract: This information collection provides the U.S. Department of Education with information needed to determine if grantees have made substantial progress toward meeting the Program's objectives and allow Program staff to monitor and evaluate the Program. The Congress has mandated (through the Government's Performance and Results Act of 1993) that the U.S. Department of Education provide documentation about the progress being made by the Program.

Requests for copies of the submission for OMB review; comment request may be accessed from *http://edicsweb.ed.gov*, by selecting the ''Browse Pending Collections'' link and by clicking on link number 2549. When you access the information collection, click on ''Download Attachments'' to view. Written requests for information should be addressed to U.S. Department of Education, 400 Maryland Avenue, SW., Potomac Center, 9th Floor, Washington, DC 20202–4700. Requests may also be electronically mailed to the Internet address *OCIO_RIMG@ed.gov* or faxed to 202–245–6621. Please specify the complete title of the information collection when making your request.

Comments regarding burden and/or the collection activity requirements should be directed to Joseph Schubart at his e-mail address *Joe.Schubart@ed.gov*. Individuals who use a telecommunications device for the deaf (TDD) may call the Federal Information Relay Service (FIRS) at 1–800–877–8339.

[FR Doc. 04–16223 Filed 7–15–04; 8:45 am]

BILLING CODE 4000–01–P

DEPARTMENT OF EDUCATION

Native American Vocational and Technical Education Program

AGENCY: Office of Vocational and Adult Education, Department of Education.

ACTION: Notice of extension of project period and waiver.

SUMMARY: We hereby waive the requirement in 34 CFR 75.261(c)(2) as it applies to projects funded under the Native American Vocational and Technical Education Program (NAVTEP) in fiscal year (FY) 2000. We waive this requirement in order to be able to extend the project periods for 31 current grants awarded under the FY 2000 NAVTEP competition.

A waiver means that: (1) Current grants will be continued at least through FY 2005 (and possibly for subsequent years, depending on the availability of appropriations for NAVTEP in FY 2005 and those years under the current statutory authority), instead of ending in FY 2004, and (2) we will not announce a new competition or make new awards in FY 2004.

DATES: This notice of extension of project period and waiver is effective July 16, 2004.

FOR FURTHER INFORMATION CONTACT: Sharon A. Jones, U.S. Department of Education, Office of Vocational and Adult Education, 400 Maryland Avenue, SW., room 11108, Potomac Center Plaza, Washington, DC 20202–7120. Telephone (202) 245–7803.

If you use a telecommunications device for the deaf (TDD), you may call the Federal Information Relay Service (FIRS) at 1–800–877–8339.

Individuals with disabilities may obtain this notice of extension of project period and waiver in an alternative format (*e.g.*, Braille, large print, audiotape, or computer diskette) on request to the contact person listed under **FOR FURTHER INFORMATION CONTACT.**

SUPPLEMENTARY INFORMATION: On April 9, 2004, we published a notice in the **Federal Register** (69 FR 18887) proposing an extension of project period and waiver in order to give early notice of the possibility that additional years of funding under the NAVTEP may be available for current grantees through continuation awards.

The Carl D. Perkins Vocational and Technical Education Act of 1998

(Perkins Act), which includes authorization for the NAVTEP, expired at the end of FY 2003 and was extended for one year under section 422 of the General Education Provisions Act (20 U.S.C. 1226a). With the uncertainties presented by the absence of authorizing legislation for the NAVTEP beyond 2004, we proposed not to hold a competition in FY 2004 for projects that would then operate for just one year. We stated in the **Federal Register** notice that we were reluctant to announce a competition under which eligible entities would be expected to proceed through the application preparation and submission process while lacking critical information about the future of the program, and that we did not think that it would be in the public interest to do so in this case. We also noted that if we were to hold a competition in FY 2004 for grants to operate in FY 2005 using the FY 2003 appropriation, grantees would not have sufficient time to establish and operate effective projects.

Accordingly, we proposed to review requests for continuation awards from the 31 current FY 2000 grantees and extend currently funded projects, rather than hold a new competition in FY 2004.

Analysis of Comments

In response to the Secretary's invitation in the notice of proposed extension of project period and waiver, 288 parties submitted comments. An analysis of the comments follows. Generally, we do not address technical and other minor changes and suggested changes that the law does not authorize the Secretary to make. We also do not address comments that are not related to issues discussed in the notice of proposed extension of project period and waiver.

Extension of current grants.

Comments: 286 of the 288 commenters supported the proposed extension of project period and waiver. The commenters generally agreed that, with the uncertainties associated with the absence of authorizing legislation, it is not in the best interest of the public to conduct a grant competition at this time. Several commenters believed that, since we are halfway into 2004, it would be difficult for administrators of current projects to find the time and money to submit new applications this year. The commenters agreed that having current grantees expend the cost and effort required to submit new applications for funding in FY 2004 would be an unnecessary burden.

Several commenters suggested that continuing the awards of current grantees would eliminate the inefficiencies associated with starting new projects for an uncertain duration and uncertain degree of effectiveness. A vast majority of the commenters thought that asking tribes to expend the time, energy, and resources that go into a large-scale application process was not logical or prudent when combined with the lack of time to establish and operate effective new projects.

Several commenters strongly believed that continuing to fund current grantees would capitalize on the successes and effectiveness of those current grantees. Moreover, the commenters thought an application process would divert resources away from training and would be extremely disruptive to current Perkins-funded education and job training programs. Several other commenters pointed out that current projects have expended considerable time, effort, and extensive resources to develop programs, instructional skills, and community support. These commenters felt that continuation of current grants would maximize these expenditures, and actually reduce potential costs and increase benefits, while preserving the effective and efficient administration of NAVTEP.

Many commenters supported the continuation of current grantees' awards because of the benefits they provide to the Indian community. Those commenters noted that current projects offer education, training, and job placement that would not be available without the NAVTEP; provide industry specific training that produces a qualified workforce; graduate trainees who are immediately hired; increase the earning power for people who were underemployed or unemployed; give tribal members an opportunity to attend college, obtain an Associate of Arts degree, and go on to higher education; and provide educational opportunities that improve the lives of students, many of whom are first generation, non-traditional students who are striving to provide a better lifestyle for themselves and their children and grandchildren. Still other commenters thought the current projects allow students to gain the skills and abilities necessary to compete in today's challenging job market as well as provide such intrinsic rewards for students as motivation, self-confidence, self-worth, and the confidence to expand beyond their perceived boundaries. Commenters pointed out that many of the current projects have waiting lists of tribal members wanting to take advantage of the programs being offered.

Discussion: We have considered the comments from individuals, tribes, and tribal organizations. The vast majority support the extension of projects and waiver and favor our proposal to continue the current grants for at least one more year, and perhaps longer, under the current NAVTEP authority. They concluded that they agree with our overall rationale for extending current projects, and that the extension will reduce burden on current grantees and capitalize on the success and effectiveness of current grantees.

Changes: None.

Hold a competition.

Comments: Two commenters recommended that we hold a competition in order to provide an opportunity for all Indian tribes to apply for support under the NAVTEP. One of those commenters also expressed the view that creating an excessive paperwork burden for currently funded grantees was not a legitimate reason for denying tribes, which are not currently receiving funds, access to a source of funds for local jobs and economic development. The commenter thought that well over 500 tribes would be deprived of a chance to apply for NAVTEP funds, and potentially experience a devastating economic impact, if we do not hold a competition in FY 2004. The commenter also thought our inability to ''guarantee'' new grantees more than one year of funding was not sufficient reason to continue funding current grantees, rather than announcing a new competition. The commenter reasoned that the amount of money received by successful NAVTEP grantees would more than compensate them for the effort of preparing an application. Additionally, the commenter thought the Perkins Act (which authorizes the NAVTEP) would not be reauthorized for several years and recommended that we award multi-year grants to new recipients rather than continue to fund grantees that have already received three years of funding. Yet another commenter expressed a desire for an opportunity to apply for NAVTEP funds this year, but thought it more important to see the projects of other Native Americans succeed.

Discussion: In response to the two commenters who expressed the above stated concerns about our proposal, first we would like to clarify that while we will accept requests for continuation proposals from the 31 current grantees for at least one additional year, in lieu of holding a new competition in FY 2004, this will not preclude the Department from holding a competition in FY 2005 or thereafter should we find that the circumstances support such a decision. Most significantly, in the

event of a reauthorization, it is likely that we will hold a new competition, under the new statutory authority. If we decide to hold a grant competition in FY 2005 or thereafter, we will announce our decision and the reasons for that decision through a notice in the **Federal Register**.

As to the comment regarding the number of Indian tribes that may be affected by our decision not to announce a new NAVTEP competition in FY 2004, we also note that, although there are over 500 Federally recognized Indian tribes, most of them historically have not chosen to apply for NAVTEP funds. In fact, over the history of competitions under the NAVTEP and the predecessor Indian Vocational Education Program, on average only 78 Federally recognized tribes actually submitted applications during any given competition.

In addition, neither in our notice of proposed extension of current grants, nor here in our final notice, do we rely exclusively or primarily on a desire to avoid what the commenter refers to as ''excessive paperwork burden'' for currently funded grantees in support of our decision, as the commenter seems to suggest. Rather, we refer to multiple factors, such as, the uncertainty of a statutory basis for the program beyond FY 2004, the fact that multi-year projects are clearly preferable in the NAVTEP, the fact that without reauthorization it is difficult if not impossible to plan for multi-year projects, and the cost and work involved in submitting a NAVTEP application. Finally, the commenter's statement that the Perkins Act is not likely to be reauthorized for several years is purely speculative and unpersuasive as support for the accompanying recommendation that the Department award multi-year grants to new applicants, rather than continue to fund current grantees.

Changes: None.

Length of project period.

Comments: One commenter did not think holding a competition for one-year projects was advisable because new grantees spend at least the first six months of new projects gearing up to meet the grant requirements. The commenter, therefore, reasoned that new grantees would have difficulty operating effective projects for only one year. Several other commenters recommended awarding three-year continuation grants to the current grantees. Yet another commenter stated that a period of three years was not enough time to operate projects and suggested that a period of five or six years would be a much more cost efficient and viable project period.

Discussion: First, we agree that many new grantees use a portion of the first year to get projects underway and, therefore, need more than a year to implement a project successfully. However, with the extension of current grants, there will be no start-up period. If continued, current projects would simply continue to address the same program goals and objectives as contained in their original applications and budget proposals.

Second, with regard to the suggestions that we award multi-year continuation grants, under § 75.251 of the Education Department's General Administrative regulations, the Secretary ''usually approves a budget period and makes a continuation award of not more than 12 months, even if the project has a multi-year project period.'' (34 CFR 75.251) The awarding of 12-month continuation awards within multi-year projects is entirely consistent with the Secretary's administrative oversight and technical assistance role as well as with the annual appropriation cycle. We see no reason to do otherwise in NAVTEP, even under these circumstances.

Change: None.

Waiver of Delayed Effective Date

The Administrative Procedure Act requires that a substantive rule shall be published at least 30 days before its effective date, except as otherwise provided for good cause (5 U.S.C. 553(d)(3)). During the 30-day public comment period we received only two comments objecting to the proposed extension of project period and waiver. For this reason, and in order to make timely continuation grants to the entities affected, the Secretary has determined that a delayed effective date is not required.

Waiver of Education Department General Administrative Regulations

In order to provide for continuation awards, we waive the requirement in 34 CFR 75.261(c)(2), which establishes the conditions for extending a project period, including prohibiting the extension of a program's project period if it involves the obligation of additional Federal funds.

This waiver means that: (1) Current NAVTEP grantees will be authorized to apply for continuation awards in FY 2004 and could be continued at least through FY 2005 (and possibly for subsequent years, depending on the availability of appropriations for the NAVTEP in FY 2005 and subsequent years under the current statutory authority), instead of ending their current projects in FY 2004, (2) we will not announce a new competition or make new awards in FY 2004 and may not announce new competitions in future years in which Congress appropriates funds under the current authority, (3) the notice inviting applications for new awards for FY 2000 under the NAVTEP published in the **Federal Register** on January 3, 2001 (66 FR 560) will govern any projects we extend under this notice, and (4) the approved applications submitted by the 31 current grantees in the 2001 competition will govern all such continuation awards.

Continuation of the Current Grantee Awards

With this waiver of 34 CFR 75.261(c)(2), we would extend the project periods of the 31 NAVTEP grantees that received grants under the FY 2000 competition for one year, and possibly for additional years for which Congress appropriates funds under the current statutory authority.

Decisions regarding annual continuation awards will be based on the program narratives, budgets and budget narratives, Grant Performance Reports submitted by grantees, and the regulations in 34 CFR 75.253. Consistent with 34 CFR 75.253, we will award continuation grants if we determine, based on information provided by each grantee, that it is making substantial progress performing its NAVTEP grant activities. Under this notice of extension of project period and waiver, (1) the project period for grantees will be extended for one additional year, and (2) additional continuation awards could be made for any additional year or years for which Congress appropriates funds under existing statutory authority.

We do not interpret the waiver as exempting current grantees from the account-closing provisions of Public Law 101–510, or as extending the availability of FY 2000 funds awarded to the grantees. As a result of Public Law 101–510, appropriations available for a limited period may be used for payments of valid obligations for only five years after the expiration of their period of availability for Federal obligation. After that time, the unexpended balance of those funds is canceled and returned to the Treasury Department and is unavailable for restoration for any purpose.

Regulatory Flexibility Act Certification

The Secretary certifies that the extension of project period and waiver and the activities required to support additional years of funding will not have a significant economic impact on a substantial number of small entities.

The small entities that would be affected by this extension of project period and waiver are the FY 2000 grantees currently receiving Federal funds and the following entities that are eligible for an award under the NAVTEP:

(1) A Federally recognized Indian tribe.

(2) A tribal organization.

(3) An Alaska Native entity.

(4) A Bureau-funded school (as defined in the January 3, 2001, notice inviting applications (66 FR 560)), except for a Bureau-funded school proposing to use its award to support secondary school vocational and technical education programs.

However, this extension of project period and waiver is not likely to have a significant economic impact on these entities because the extension of project period and waiver and the activities required to support the additional years of funding will not impose excessive regulatory burdens or require unnecessary Federal supervision. This extension of project period and waiver will impose minimal requirements to ensure the proper expenditure of program funds, including requirements that are standard to continuation awards.

Instructions for Requesting a Continuation Award

Generally, in order to receive a continuation grant, a grantee must submit an annual program narrative that describes the activities it intends to carry out during the year of the continuation award. The activities must be consistent with, or be a logical extension of, the scope, goals, and objectives of the grantee's application approved under the FY 2000 competition. A grantee must also submit a budget and budget narrative for each year it requests a continuation award. (34 CFR 75.253(c)(2)). A grantee should request a continuation award at least 30 days before its current grant expires. A grantee may request a continuation award for any year for which Congress appropriates funds under the current statutory authority, unless the Department holds a grant competition under the NAVTEP.

Amount of New Awards Under Continuation Grant

The actual amount of any continuation award depends on factors such as: (1) The grantee's written statement describing how the funds made available under the continuation award will be used, (2) a cost analysis of the grantee's budget by the Department, and (3) whether the unobligated funds made available are needed to complete activities that were planned for completion in the prior budget period. (34 CFR 75.232 and 75.253(c)(2)(ii) and (3)).

Paperwork Reduction Act of 1995

This extension of project period and waiver do not contain any information collection requirements.

Intergovernmental Review

The NAVTEP is not subject to Executive Order 12372 and the regulations in 34 CFR part 79.

Assessment of Educational Impact

In the April 9, 2004, notice of proposed extension of project period and waiver (69 FR 18887) we requested comments on whether the proposed extension of project period and waiver would require transmission of information that any other agency or authority of the United States gathers or makes available.

Based on the responses to that notice, and our own review, we have determined that this final notice of extension of project period and waiver does not require transmission of information that any other agency or authority of the United States gathers or makes available.

Electronic Access to This Document

You may view this document, as well as all other Department of Education documents published in the **Federal Register**, in text or Adobe Portable Document Format (PDF) on the Internet at the following site: *http://www.ed.gov/news/fedregister.*

To use PDF you must have Adobe Acrobat Reader, which is available free at this site. If you have questions about using PDF, call the U.S. Government Printing Office (GPO), toll free, at 1–888–293–6498; or in the Washington, DC, area at (202) 512–1530.

Note: The official version of this document is the document published in the **Federal Register**. Free Internet access to the official edition of the **Federal Register** and the Code of Federal Regulations is available on GPO Access at: *http://www.gpoaccess.gov/nara/index.html.*

(Catalog of Federal Domestic Assistance Number 84.101 Native American Vocational and Technical Education Program.)

Program Authority: 20 U.S.C. 2326(a) through (g).

Dated: July 13, 2004.

Susan Sclafani,

Assistant Secretary for Vocational and Adult Education.

[FR Doc. 04–16231 Filed 7–15–04; 8:45 am]

BILLING CODE 4000–01–P

DEPARTMENT OF EDUCATION

National Assessment Governing Board; Meeting

AGENCY: National Assessment Governing Board; Education.

ACTION: Notice of open meeting and closed meetings.

SUMMARY: The notice sets forth the schedule and proposed agenda of a forthcoming meeting of the National Assessment Governing Board. This notice also describes the functions of the Board. Notice of this meeting is required under section 10(a)(2) of the Federal Advisory Committee Act. This document is intended to notify members of the general public of their opportunity to attend. Individuals who will need special accommodations in order to attend the meeting (*i.e.*; interpreting services, assistive listening devices, materials in alternative format) should notify Munira Mwalimu at 202–357–6938 or at *Munira.Mwalimu@ed.gov* no later than July 30, 2004. We will attempt to meet requests after this date, but cannot guarantee availability of the requested accommodation. The meeting site is accessible to individuals with disabilities.

DATES: August 5–August 7, 2004.

Times:

August 5: Committee Meetings: Assessment Development Committee: closed session—9 a.m. to 2:30 p.m.; Ad Hoc Committee on NAEP 12th Grade Participation: open session—2:30 p.m. to 4 p.m.; Executive Committee: open session—4:30 p.m. to 5 p.m.; closed session—5 p.m. to 6 p.m.

August 6: Full Board: open session—8:30 a.m. to 5 p.m.; Committee Meetings: Assessment Development Committee: open session—10 a.m. to 12 p.m.; Committee on Standards, Design, and Methodology; open sessison—10 a.m. to 12 p.m.; Reporting and Dissemination Committee: open session—10 a.m. to 12 p.m.

August 7: Full Board: open session—8:15 a.m. to 12 p.m.

Location: The St. Regis Hotel, 923 16th and K Streets, NW., Washington, DC 20006.

FOR FURTHER INFORMATION CONTACT: Munira Mwalimu, Operations Officer, National Assessment Government Board, 800 North Capitol Street, NW., Suite 825, Washington, DC, 20002–4233, telephone: (202) 357–6938.

SUPPLEMENTARY INFORMATION: The National Assessment Governing Board is established under section 412 of the National Education Statistics Act of 1994, as amended.

The Board is established to formulate policy guidelines for the National Assessment of Educational Progress (NAEP). The Board's responsibilities include selecting subject areas to be assessed, developing assessment objectives, developing appropriate student achievement levels for each grade and subject tested, developing guidelines for reporting and disseminating results, and developing standards and procedures for interstate and national comparisons.

The Assessment Development Committee will meet in closed session on August 5 from 9 a.m. to 2:30 p.m. to review secure test items for the National Assessment of Educational Progress (NAEP) 2006 assessments in U.S. History and Civics, and the NAEP 2007 Reading Assessment. The meeting must be conducted in closed session as disclosure of proposed test items from the NAEP assessments would significantly impede implementation of the NAEP program, and is therefore protected by exemption 9(B) of section 552b(c) of title 5 U.S.C.

On August 5, the Ad Hoc Committee on NAEP 12th Grade Participation and Motivation will meet in open session from 2:30 p.m. to 4 p.m. The Execution Committee will meet in open session on August 5 from 4:30 p.m. to 5 p.m. The committee will then meet in closed session from 5 p.m. to 6 p.m. to discuss independent government cost estimates for contracts related to the National Assessment of Educational Progress (NAEP). This part of the meeting must be conducted in closed session because public disclosure of this information would likely have an adverse financial effect on the NAEP program and will provide an advantage to potential bidders attending the meeting. The discussion of this information would be likely to significantly impede implementation of a proposed agency action if conducted in open session. Such matters are protected by exemption 9(B) of section 552b(c) of title 5 U.S.C.

On August 6, the full Board will meet in open session from 8 a.m. to 5 p.m. The Board will approve the agenda; recognize departing Board members; hear the Executive Director's report; receive an update on the work of the National Center for Education Statistics (NCES) from the Commissioner of NCES, Robert Lerner; and discuss NAEP inclusion and accommodation issues.

From 10 a.m. to 12 p.m. on August 6, the Board's standing committees— the Assessment Development Committee; the Committee on Standards, Design and Methodology; and the Reporting and Dissemination Committee—will meet in open session.

From 12:30 p.m. to 1 p.m., Board members will receive an ethics briefing from staff of the Office of General Counsel. This will be followed by Board discussion and action on the NAEP 2009 Reading Framework from 1 p.m. to 3 p.m. The Board will then receive a briefing on models for describing ''readiness'' for postsecondary education from 3:15 p.m. to 5 p.m., after which the August 6 session of the Board meeting will adjourn.

On August 7, the full Board will meet in open session from 8:15 a.m. to 12 p.m. At 8:15 a.m., the Board will receive a briefing on pre-conference sessions that took place at the Large-Scale Assessment Conference. From 8:30 a.m. to 9:15 a.m., the Board will discuss NAEP Reporting Guidelines. This item will be followed by a presentation on student ''readiness'' for postsecondary options from 9:15 a.m. to 9:45 a.m.

From 10 a.m. to 11 a.m., the Board will discuss issues related to 12th Grade NAEP. Board actions on policies and Committee reports are scheduled to take place between 11 a.m. and 11:45 a.m., Board members will elect the Vice Chair from 11:45 to 12 noon, upon which the August 7, 2004, session of the Board meeting will adjourn.

Detailed minutes of the meeting, including summaries of the activities of the closed sessions and related matters that are informative to the public and consistent with the policy of section 5 U.S.C. 552b(c) will be available to the public within 14 days of the meeting. Records are kept of all Board proceedings and are available for public inspection at the U.S. Department of Education, National Assessment Governing Board, Suite #825, 800 North Capitol Street, NW., Washington, DC, from 9 a.m. to 5 p.m. eastern standard time.

Dated: July 13, 2004.

Charles E. Smith,

Executive Director, National Assessment Governing Board.

[FR Doc. 04–16163 Filed 7–15–04; 8:45 am]

BILLING CODE 4000–01–M

DEPARTMENT OF EDUCATION

Recognition of Accrediting Agencies, State Agencies for the Approval of Public Postsecondary Vocational Education, and State Agencies for the Approval of Nurse Education

AGENCY: National Advisory Committee on Institutional Quality and Integrity, Department of Education (The Advisory Committee).

What Is the Purpose of This Notice?

The purpose of this notice is to invite written comments on accrediting agencies and State approval agencies whose applications to the Secretary for initial or renewed recognition or whose interim reports will be reviewed at the Advisory Committee meeting to be held on December 13–15, 2004.

Where Should I Submit My Comments?

Please submit your written comments by August 30, 2004 to Ms. Carol Griffiths, Accreditation and State Liaison. You may contact her at the U.S. Department of Education, room 7105, MS 8509, 1990 K Street, NW., Washington, DC 20006, telephone: (202) 219–7011. Individuals who use a telecommunications device for the deaf (TDD) may call the Federal Information Relay Service at 1–800–877–8339.

What Is the Authority for the Advisory Committee?

The National Advisory Committee on Institutional Quality and Integrity is established under Section 114 of the Higher Education Act (HEA), as amended, 20 U.S.C. 1011c. One of the purposes of the Advisory Committee is to advise the Secretary of Education on the recognition of accrediting agencies and State approval agencies.

Will This Be My Only Opportunity To Submit Written Comments?

Yes, this notice announces the only opportunity you will have to submit written comments. However, a subsequent **Federal Register** notice will announce the meeting and invite individuals and/or groups to submit requests to make oral presentations before the Advisory Committee on the agencies that the Committee will review. That notice, however, does not offer a second opportunity to submit written comment.

What Happens to the Comments That I Submit?

We will review your comments, in response to this notice, as part of our evaluation of the agencies' compliance with the Secretary's Criteria for Recognition of Accrediting Agencies and State Approval Agencies. The Criteria are regulations found in 34 CFR Part 602 (for accrediting agencies) and in 34 CFR Part 603 (for State approval agencies) and are found at the following site: *http://www.ed.gov/admins/finaid/accred.*

We will also include your comments with the staff analyses we present to the Advisory Committee at its December 2004 meeting. Therefore, in order for us to give full consideration to your

comments, it is important that we receive them by August 30, 2004. In all instances, your comments about agencies seeking initial or continued recognition must relate to the Criteria for Recognition. In addition, your comments for any agency whose interim report is scheduled for review must relate to the issues raised and the Criteria for Recognition cited in the Secretary's letter that requested the interim report.

What Happens to Comments Received After the Deadline?

We will review any comments received after the deadline. If such comments, upon investigation, reveal that the accrediting agency is not acting in accordance with the Criteria for Recognition, we will take action either before or after the meeting, as appropriate.

What Agencies Will the Advisory Committee Review at the Meeting?

The Secretary of Education recognizes accrediting agencies and State approval agencies for public postsecondary vocational education and nurse education if the Secretary determines that they meet the Criteria for Recognition. Recognition means that the Secretary considers the agency to be a reliable authority as to the quality of education offered by institutions or programs it accredits that are encompassed within the scope of recognition he grants to the agency.

Please note that the agencies listed below, which were originally scheduled for review during the National Advisory Committee's June 2004 meeting, were deferred and will be reviewed at the December 2004 meeting.

- Accrediting Bureau of Health Education Schools
- American Academy for Liberal Education
- American Speech-Language-Hearing Association, Council on Academic Accreditation in Audiology and Speech-Language Pathology
- National Association of Schools of Art and Design, Commission on Accreditation
- National Association of Schools of Dance, Commission on Accreditation
- National Association of Schools of Music, Commission on Accreditation, Commission on Non-Degree-Granting Accreditation, Commission on Community/Junior College Accreditation
- National Association of Schools of Theatre, Commission on Accreditation
- New England Association of Schools and Colleges, Commission on Institutions of Higher Education
- New England Association of Schools and Colleges, Commission on Technical and Career Institutions
- Puerto Rico State Agency for the Approval of Public Postsecondary Vocational, Technical Institutions and Programs

Any third-party written comments regarding these agencies that were received by March 22, 2004, in accordance with the **Federal Register** notice published on February 5, 2004, will become part of the official record. Those comments will be considered by the National Advisory Committee when it reviews the agencies at the December 2004 meeting.

The following agencies will be reviewed during the December 2004 meeting of the Advisory Committee:

Nationally Recognized Accrediting Agencies

Petitions for Renewal of Recognition

1. Accrediting Bureau of Health Education Schools (Current scope of recognition: The accreditation of private, postsecondary allied health education institutions and institutions that offer predominantly allied health programs, private medical assistant programs, and public and private medical laboratory technician programs leading to the Associate of Applied Science and the Associate of Occupational Science degrees.) (Requested scope of recognition: The accreditation of private, postsecondary institutions in the United States offering predominantly allied health education programs and the programmatic accreditation of allied health programs, leading to a certificate, diploma, or the Associate of Applied Science and Associate of Occupational Science degrees, including those offered via distance education.)

2. Accrediting Commission of Career Schools and Colleges of Technology (Current scope of recognition: The accreditation of private, postsecondary, non-degree-granting institutions and degree-granting institutions, including those granting associate and baccalaureate degrees, that are predominantly organized to educate students for occupational, trade and technical careers, and including institutions that offer programs via distance education.) (Requested scope of recognition: The accreditation of private, postsecondary, non-degree-granting institutions and degree-granting institutions in the United States, including those granting associate and baccalaureate degrees, that are predominantly organized to educate students for occupational, trade and technical careers, and including institutions that offer programs via distance education.)

3. American Psychological Association, Committee on Accreditation (Current and requested scope of recognition: The accreditation of doctoral programs in clinical, counseling, school and combined professional-scientific psychology; predoctoral internship programs in professional psychology; and postdoctoral residency programs in professional psychology.)

4. National Accrediting Commission of Cosmetology Arts and Sciences (Current scope of recognition: The accreditation of postsecondary schools and departments of cosmetology arts and sciences and massage therapy.) (Requested scope of recognition: The accreditation of postsecondary schools and departments of cosmetology arts and sciences and massage therapy in the United States.)

5. Transnational Association of Christian Colleges and Schools, Accreditation Commission (Current scope of recognition: The accreditation and preaccreditation (''Candidate'' status) of postsecondary institutions that offer certificates, diplomas, and associate, baccalaureate, and graduate degrees, including institutions that offer distance education.) (Requested scope of recognition: The accreditation and preaccreditation (''Candidate'' status) of postsecondary institutions in the United States that offer certificates, diplomas, and associate, baccalaureate, and graduate degrees, including institutions that offer distance education.)

6. Western Association of Schools and Colleges, Accrediting Commission for Schools (Current and requested scope of recognition: the accreditation and preaccreditation (''Candidate for Accreditation'') of adult and postsecondary schools that offer programs below the degree level in California, Hawaii, the United States territories of Guam and American Samoa, the Republic of Palau, the Federated States of Micronesia, the Commonwealth of the Northern Mariana Islands, and the Republic of the Marshall Islands.)

Interim Reports (An interim report is a follow-up report on an accrediting agency's compliance with specific criteria for recognition that was requested by the Secretary when the Secretary granted renewed recognition to the agency.)

1. American Academy for Liberal Education

2. American Speech-Language-Hearing Association, Council on

Academic Accreditation in Audiology and Speech-Language Pathology

3. Commission on English Language Program Accreditation

4. Montessori Accreditation Council for Teacher Education, Commission on Accreditation

5. National Association of Schools of Art and Design, Commission on Accreditation

6. National Association of Schools of Dance, Commission on Accreditation

7. National Association of Schools of Music, Commission on Accreditation, Commission on Non-Degree-Granting Accreditation, Commission on Community/Junior College Accreditation

8. National Association of Schools of Theatre, Commission on Accreditation

9. New England Association of Schools and Colleges, Commission on Institutions of Higher Education

10. New England Association of Schools and Colleges, Commission on Technical and Career Institutions

11. Teacher Education Accreditation Council, Accreditation Committee

Progress Report: A report on the agency's experience with its new method and system to assess its institutions' success with respect to student achievement.

1. Distance Education and Training Council, Accrediting Commission

State Agencies Recognized for the Approval of Public Postsecondary Vocational Education

Petitions for Renewal of Recognition

1. Oklahoma State Regents for Higher Education

2. Puerto Rico State Agency for the Approval of Public Postsecondary Vocational, Technical Institutions and Programs

Interim Report

1. Missouri State Board of Education

Federal Agency Seeking Degree-Granting Authority

In accordance with the Federal policy governing the granting of academic degrees by Federal agencies (approved by a letter from the Director, Bureau of the Budget, to the Secretary, Health, Education, and Welfare, dated December 23, 1954), the Secretary is required to establish a review committee to advise the Secretary concerning any legislation that may be proposed that would authorize the granting of degrees by a Federal agency. The review committee forwards its recommendation concerning a Federal agency's proposed degree-granting authority to the Secretary, who then forwards the committee's recommendation and the Secretary's recommendation to the Office of Management and Budget for review and transmittal to the Congress. The Secretary uses the Advisory Committee as the review committee required for this purpose. Accordingly, the Advisory Committee will review the following institution at this meeting:

Proposed Master's Degree-Granting Authority

1. National Defense University, Joint Forces Staff College, Joint Advanced Warfighting School, Norfolk, VA (request to award a Master's in Science (M.S.) degree in Joint Campaign Planning and Strategy)

Where Can I Inspect Petitions and Third-Party Comments Before and After the Meeting?

All petitions and those third-party comments received in advance of the meeting, will be available for public inspection and copying at the U.S. Department of Education, room 7105, MS 8509, 1990 K Street, NW., Washington, DC 20006, telephone (202) 219–7011 between the hours of 8 a.m. and 3 p.m., Monday through Friday, until November 17, 2004. They will be available again after the December 13–15 Advisory Committee meeting. An appointment must be made in advance of such inspection or copying.

How May I Obtain Electronic Access to This Document?

You may view this document, as well as all other Department of Education documents published in the **Federal Register**, in text or Adobe Portable Document Format (PDF) on the Internet at the following site: *http://www.ed.gov/legislation/FedRegister*.

To use PDF you must have Adobe Acrobat Reader, which is available free at this site. If you have questions about using PDF, call the U.S. Government Printing Office (GPO), toll free, at 1–888–293–6498; or in the Washington, DC, area at (202) 512–1530.

Note: The official version of this document is the document published in the **Federal Register**. Free Internet access to the official edition of the **Federal Register** and the Code of Federal Regulations is available on GPO Access at: *http://www.gpoaccess.gpo/nara/index.html*.

Authority: 5 U.S.C. Appendix 2.

Dated: July 12, 2004.

Sally L. Stroup,

Assistant Secretary for Postsecondary Education.

[FR Doc. 04–16144 Filed 7–15–04; 8:45 am]

BILLING CODE 4000–01–P

DEPARTMENT OF ENERGY

Environmental Management Site-Specific Advisory Board, Fernald

AGENCY: Department of Energy.

ACTION: Notice of open meeting.

SUMMARY: This notice announces a meeting of the Environmental Management Site-Specific Advisory Board (EM SSAB), Fernald. The Federal Advisory Committee Act (Pub. L. 92–463, 86 Stat. 770) requires that public notice of these meetings be announced in the **Federal Register**.

DATES: Tuesday, August 3, 2004 6:15 p.m.–9 p.m.

ADDRESSES: Fernald Closure Project Site, 7400 Willey Road, Trailer 214, Hamilton, OH 45253.

FOR FURTHER INFORMATION CONTACT: Doug Sarno, The Perspectives Group, Inc., 1055 North Fairfax Street, Suite 204, Alexandria, VA 22314, at (703) 837–1197, or e-mail; *djsarno@theperspectivesgroup.com.*

SUPPLEMENTARY INFORMATION: *Purpose of the Board:* The purpose of the Board is to make recommendations to DOE in the areas of environmental restoration, waste management, and related activities.

Tentative Agenda

6:15 p.m.–Call to Order
6:15–6:30 p.m.—Chairs Remarks, Ex Officio Announcements and Updates
6:30–7:30 p.m.—Silos Projects
7:30–8:30 p.m.—Site Tour
8:30–8:45 p.m.—Preparation for September Retreat
8:45–9 p.m.—Public Comment
9 p.m.—Adjourn

Public Participation: The meeting is open to the public. Written statements may be filed with the Board chair either before or after the meeting. Individuals who wish to make oral statements pertaining to agenda items should contact the Board chair at the address or telephone number listed below. Requests must be received five days prior to the meeting and reasonable provision will be made to include the presentation in the agenda. The Deputy Designated Federal Officer, Gary Stegner, Public Affairs Office, Ohio Field Office, U.S. Department of Energy, is empowered to conduct the meeting in a fashion that will facilitate the orderly conduct of business. Each individual wishing to make public comment will be provided a maximum of five minutes to present their comments.

Minutes: The minutes of this meeting will be available for public review and

copying at the Freedom of Information Public Reading Room, 1E–190, Forrestal Building, 1000 Independence Avenue, SW., Washington, DC, 20585 between 9 a.m. and 4 p.m., Monday–Friday, except Federal holidays. Minutes will also be available by writing to the Fernald Citizens' Advisory Board, % Phoenix Environmental Corporation, MS–76, Post Office Box 538704, Cincinnati, OH 43253–8704, or by calling the Advisory Board at (513) 648–6478.

Issued at Washington, DC on July 13, 2004.

Rachel Samuel,

Deputy Advisory Committee Management Officer.

[FR Doc. 04–16185 Filed 7–15–04; 8:45 am]

BILLING CODE 6450–01–P

DEPARTMENT OF ENERGY

Environmental Management Site-Specific Advisory Board, Rocky Flats

AGENCY: Department of Energy.

ACTION: Notice of open meeting.

SUMMARY: This notice announces a meeting of the Environmental Management Site-Specific Advisory Board (EM SSAB), Rocky Flats. The Federal Advisory Committee Act (Pub. L. 92–463, 86 Stat. 770) requires that public notice of these meetings be announced in the **Federal Register.**

DATES: Thursday, August 5, 2004 6 p.m. to 9 p.m.

ADDRESSES: College Hill Library, Room L268, Front Range Community College, 3705 West 112th Avenue, Westminster, CO.

FOR FURTHER INFORMATION CONTACT: Ken Korkia, Board/Staff Coordinator, Rocky Flats Citizens Advisory Board, 10808 Highway 93, Unit B, Building 60, Room 107B, Golden, CO, 80403; telephone (303) 966–7855; fax (303) 966–7856.

SUPPLEMENTARY INFORMATION: *Purpose of the Board:* The purpose of the Board is to make recommendations to DOE in the areas of environmental restoration, waste management, and related activities.

Tentative Agenda

1. Update on Environmental Restoration Projects
2. Discussion and Approval of Recommendations on the Draft Rocky Flats Public Participation Plan
3. Other Board business may be conducted as necessary
4. Public Comment

Public Participation: The meeting is open to the public. Written statements may be filed with the Board either before or after the meeting. Individuals who wish to make oral statements pertaining to agenda items should contact Ken Korkia at the address or telephone number listed above. Requests must be received at least five days prior to the meeting and reasonable provisions will be made to include the presentation in the agenda. The Deputy Designated Federal Officer is empowered to conduct the meeting in a fashion that will facilitate the orderly conduct of business. Each individual wishing to make public comment will be provided a maximum of five minutes to present their comments.

Minutes: The minutes of this meeting will be available for public review and copying at the office of the Rocky Flats Citizens Advisory Board, 10808 Highway 93, Unit B, Building 60, Room 107B, Golden, CO 80403; telephone (303) 966–7855. Hours of operations are 7:30 a.m. to 4 p.m., Monday through Friday. Minutes will also be made available by writing or calling Ken Korkia at the address or telephone number listed above. Board meeting minutes are posted on RFCAB's Web site within one month following each meeting at: *http://www.rfcab.org/Minutes.HTML.*

Issued at Washington, DC on July 13, 2004.

Rachel M. Samuel,

Deputy Advisory Committee Management Officer.

[FR Doc. 04–16186 Filed 7–15–04; 8:45 am]

BILLING CODE 6450–01–P

DEPARTMENT OF ENERGY

Federal Energy Regulatory Commission

[Docket No. RP04–269–001]

Black Marlin Pipeline Company; Notice of Amended Cash-Out Report

July 12, 2004.

Take notice that on July 1, 2004, Black Marlin Pipeline Company (Black Marlin) tendered for filing an amended annual cashout report for the calendar year that ended December 31, 2003.

Any person desiring to protest said filing should file a protest with the Federal Energy Regulatory Commission, 888 First Street, NE., Washington, DC 20426, in accordance with Section 385.211 of the Commission's Rules and Regulations. All such protests must be filed on or before the protest date as shown below. Protests will be considered by the Commission in determining the appropriate action to be taken, but will not serve to make protestants parties to the proceedings. This filing is available for review at the Commission in the Public Reference Room or may be viewed on the Commission's Web site at *http://www.ferc.gov* using the eLibrary link. Enter the docket number excluding the last three digits in the docket number field to access the document. Comments, protests and interventions may be filed electronically via the Internet in lieu of paper. For assistance, please contact FERC Online Support at *FERCOnlineSupport@ferc.gov* or toll-free at (866) 208–3676, or TTY, contact (202) 502–8659. The Commission strongly encourages electronic filings. See, 18 CFR 385.2001(a)(1)(iii) and the instructions on the Commission's Web site under the e-Filing link.

Protest Date: July 19, 2004.

Magalie R. Salas,

Secretary.

[FR Doc. E4–1598 Filed 7–15–04; 8:45 am]

BILLING CODE 6717–01–P

DEPARTMENT OF ENERGY

Federal Energy Regulatory Commission

[Docket No. RP96–200–125]

CenterPoint Energy Gas Transmission Company; Notice of Compliance Filing

July 12, 2004.

Take notice that on July 6, 2004, CenterPoint Energy Gas Transmission Company (CEGT) tendered for filing as part of its FERC Gas Tariff, Sixth Revised Volume No. 1, the tariff sheets listed on Appendix A to the filing to be effective June 7, 2004.

CEGT states that the purpose of this filing is to correct the pagination on the tariff sheets in compliance with the Commission's order issued June 28, 2004.

Any person desiring to protest said filing should file a protest with the Federal Energy Regulatory Commission, 888 First Street, NE., Washington, DC 20426, in accordance with section 385.211 of the Commission's Rules and Regulations. All such protests must be filed in accordance with section 154.210 of the Commission's Regulations. Protests will be considered by the Commission in determining the appropriate action to be taken, but will not serve to make protestants parties to the proceedings. This filing is available for review at the Commission in the Public Reference Room or may be viewed on the Commission's Web site at *http://www.ferc.gov* using the eLibrary link. Enter the docket number excluding the last three digits in the docket number field to access the document.

For assistance, please contact FERC Online Support at *FERCOnlineSupport@ferc.gov* or toll-free at (866) 208–3676, or TTY, contact (202) 502–8659. The Commission strongly encourages electronic filings. See, 18 CFR 385.2001(a)(1)(iii) and the instructions on the Commission's Web site under the e-Filing link.

Magalie R. Salas,

Secretary.

[FR Doc. E4–1600 Filed 7–15–04; 8:45 am]

BILLING CODE 6717–01–P

DEPARTMENT OF ENERGY

Federal Energy Regulatory Commission

[Docket No. RP96–383–057]

Dominion Transmission, Inc.; Notice of Negotiated Rate

July 12, 2004.

Take notice that on June 30, 2004, Dominion Transmission, Inc. (DTI) tendered for filing as part of its FERC Gas Tariff, Third Revised Volume No. 1, Fifth Revised Sheet No. 1406, with an effective date of July 1, 2004.

DTI states that the purpose of this filing is reflect on assignment of a previously reported negotiated rate transaction from WPS Energy Services, Inc. to WPS Syracuse Generation, LLC.

Any person desiring to be heard or to protest said filing should file a motion to intervene or a protest with the Federal Energy Regulatory Commission, 888 First Street, NE., Washington, DC 20426, in accordance with sections 385.214 or 385.211 of the Commission's Rules and Regulations. All such motions or protests must be filed in accordance with section 154.210 of the Commission's Regulations. Protests will be considered by the Commission in determining the appropriate action to be taken, but will not serve to make protestants parties to the proceedings. Any person wishing to become a party must file a motion to intervene. This filing is available for review at the Commission in the Public Reference Room or may be viewed on the Commission's Web site at *http://www.ferc.gov* using the eLibrary. Enter the docket number excluding the last three digits in the docket number field to access the document. For assistance, please contact FERC Online Support at *FERCOnlineSupport@ferc.gov* or toll-free at (866) 208–3676, or TTY, contact (202) 502–8659. The Commission strongly encourages electronic filings. See, 18 CFR 385.2001(a)(1)(iii) and the instructions on the Commission's Web site under the e-Filing link.

Magalie R. Salas,

Secretary.

[FR Doc. E4–1603 Filed 7–15–04; 8:45 am]

BILLING CODE 6717–01–P

DEPARTMENT OF ENERGY

Federal Energy Regulatory Commission

[Docket No. RP96–383–059]

Dominion Transmission, Inc.; Notice of Negotiated Rate

July 12, 2004.

Take notice that on July 1, 2004, Dominion Transmission, Inc. (DTI) tendered for filing as part of its FERC Gas Tariff, Third Revised Volume No. 1, Fourth Revised Sheet No. 1401, with an effective date of August 1, 2004.

DTI states that the purpose of this filing is to convert its individually certificated service to Onondaga Cogeneration Limited Partnership (Onondaga) to open access service under part 284 of the Commission's regulations using negotiated rates.

Any person desiring to be heard or to protest said filing should file a motion to intervene or a protest with the Federal Energy Regulatory Commission, 888 First Street, NE., Washington, DC 20426, in accordance with sections 385.214 or 385.211 of the Commission's Rules and Regulations. All such motions or protests must be filed in accordance with section 154.210 of the Commission's Regulations. Protests will be considered by the Commission in determining the appropriate action to be taken, but will not serve to make protestants parties to the proceedings. Any person wishing to become a party must file a motion to intervene. This filing is available for review at the Commission in the Public Reference Room or may be viewed on the Commission's Web site at *http://www.ferc.gov* using the eLibrary. Enter the docket number excluding the last three digits in the docket number field to access the document. For assistance, please contact FERC Online Support at *FERCOnlineSupport@ferc.gov* or toll-free at (866) 208–3676, or TTY, contact (202) 502–8659. The Commission strongly encourages electronic filings. *See* 18 CFR 385.2001(a)(1)(iii) and the instructions on the Commission's Web site under the e-Filing link.

Magalie R. Salas,

Secretary.

[FR Doc. E4–1604 Filed 7–15–04; 8:45 am]

BILLING CODE 6717–01–P

DEPARTMENT OF ENERGY

Federal Energy Regulatory Commission

[Docket No. RP04–396–000]

Eastern Shore Natural Gas Company; Notice of Proposed Changes in FERC Gas Tariff

July 12, 2004.

Take notice that on July 7, 2004, Eastern Shore Natural Gas Company (ESNG) tendered for filing as part of its FERC Gas Tariff, Second Revised Volume No. 1, the tariff sheets listed on Appendix A to the filing, to be effective August 1, 2004.

Northern states that the purpose of the filing is to track rate changes attributable to a storage service purchased from Columbia Gas Transmission Corporation (Columbia) under their Rate Schedules FSS and SST. ESNG indicates that the costs of the above referenced storage service comprises the rates and charges payable under ESNG's Rate Schedule CFSS. ESNG notes that the tracking filing is being made pursuant to section 3 of ESNG's Rate Schedule CFSS.

ESNG states that copies of the filing have been served upon its jurisdictional customers and interested State Commissions.

Any person desiring to protest said filing should file a protest with the Federal Energy Regulatory Commission, 888 First Street, NE., Washington, DC 20426, in accordance with section 385.211 of the Commission's Rules and Regulations. All such protests must be filed in accordance with section 154.210 of the Commission's Regulations. Protests will be considered by the Commission in determining the appropriate action to be taken, but will not serve to make protestants parties to the proceedings. This filing is available for review at the Commission in the Public Reference Room or may be viewed on the Commission's Web site at *http://www.ferc.gov* using the eLibrary link. Enter the docket number excluding the last three digits in the docket number field to access the document. For assistance, please contact FERC Online Support at *FERCOnlineSupport@ferc.gov* or toll-free at (866) 208–3676, or TTY, contact

(202) 502–8659. The Commission strongly encourages electronic filings. See, 18 CFR 385.2001(a)(1)(iii) and the instructions on the Commission's Web site under the e-Filing link.

Magalie R. Salas,

Secretary.

[FR Doc. E4–1599 Filed 7–15–04; 8:45 am]

BILLING CODE 6717–01–P

DEPARTMENT OF ENERGY

Federal Energy Regulatory Commission

Notice of Application for Amendment of License and Soliciting Comments, Motions To Intervene, and Protests

July 12, 2004.

Take notice that the following application has been filed with the Commission and is available for public inspection:

a. *Application Type:* Relocation of Commercial Marina, which has more than ten (10) boat slips.

b. *Project No.:* 2221–031.

c. *Date Filed:* June 30, 2004.

d. *Applicant:* Empire District Electric Company.

e. *Name of Project:* Ozark Beach.

f. *Location:* The project is located on the White River in Taney County, Missouri.

g. *Filed Pursuant to:* Federal Power Act, 16 U.S.C. 791(a)–825(r), 799 and 801.

h. *Applicant Contact:* Mr. Robert Barchak, Manager of Land Administration, Empire District Electric, 602 Joplin Street, Box 127, Joplin, Missouri 64802, 417/625–6160.

i. *FERC Contact:* Any questions on this notice should be addressed to Mrs. Patricia Grant at 312/596–4435, or e-mail address: *patricia.grant@ferc.gov*.

j. *Deadline for filing comments and or motions:* August 2, 2004.

k. All documents (original and eight copies) should be filed with: Ms. Magalie R. Salas, Secretary, Federal Energy Regulatory Commission, 888 First Street, NE., Washington DC 20426. Please include the project number (P–2221–031) on any comments or motions filed. Comments, protests, and interventions may be filed electronically via the internet in lieu of paper. See 18 CFR 385.2001(a)(1)(iii) and the instructions on the Commission's Web site at *http://www.ferc.gov* under the ''e-Filing'' link. The Commission strongly encourages e-filings.

l. *Description of Request:* The licensee filed a request, pursuant to article 204 of its license, to relocate Scotty's Trout Dock Marina (marina) to provide continued public access to this river section of the project. The marina is currently located at Mile Marker 13(1), on Lake Taneycomo, at the end of Oklahoma Street and next to the City of Branson's North Beach Park. It would be relocated approximately one mile upstream at Mile Marker 14, at the railroad bridge, into the City of Branson Campground, Number 2. The Marina is to be relocated as is, with no additions to the existing facility.

m. *Location of the Application:* This filing is available for review at the Commission in the Public Reference Room 888 First Street, NE., Room 2A, Washington, DC 20426 or may be viewed on the Commission's Web site at *http://www.ferc.gov* using the ''E-Library'' link. Enter the docket number excluding the last three digits in the docket number field to access the document. For assistance, call toll-free 1–866–208–3676 or e-mail *FERCOnlineSupport@ferc.gov*. For TTY, call (202) 502–8659. A copy is also available for inspection and reproduction at the address in item h above.

n. Individuals desiring to be included on the Commission's mailing list should so indicate by writing to the Secretary of the Commission.

o. Comments, Protests, or Motions to Intervene—Anyone may submit comments, a protest, or a motion to intervene in accordance with the requirements of Rules of Practice and Procedure, 18 CFR 385.210, .211, .214. In determining the appropriate action to take, the Commission will consider all protests or other comments filed, but only those who file a motion to intervene in accordance with the Commission's Rules may become a party to the proceeding. Any comments, protests, or motions to intervene must be received on or before the specified comment date for the particular application.

p. Filing and Service of Responsive Documents—Any filings must bear in all capital letters the title ''COMMENTS'', ''RECOMMENDATIONS FOR TERMS AND CONDITIONS'', ''PROTEST'', OR ''MOTION TO INTERVENE'', as applicable, and the Project Number of the particular application to which the filing refers. A copy of any motion to intervene must also be served upon each representative of the Applicant specified in the particular application.

q. Agency Comments—Federal, State, and local agencies are invited to file comments on the described application. A copy of the application may be obtained by agencies directly from the Applicant. If an agency does not file comments within the time specified for filing comments, it will be presumed to have no comments. One copy of an agency's comments must also be sent to the Applicant's representatives.

Magalie R. Salas,

Secretary.

[FR Doc. E4–1591 Filed 7–15–04; 8:45 am]

BILLING CODE 6717–01–P

DEPARTMENT OF ENERGY

Federal Energy Regulatory Commission

[Docket No. RP99–518–060]

Gas Transmission Northwest Corporation; Notice of Negotiated Rate

July 12, 2004.

Take notice that on June 30, 2004, Gas Transmission Northwest Corporation (GTN) tendered for filing to be part of its FERC Gas Tariff, Third Revised Volume No. 1–A, Tenth Revised Sheet No. 15, with of effective date of July 1, 2004.

GTN states that this sheet is being filed to reflect the continuation of a negotiated rate agreement pursuant to evergreen provisions contained in the agreement.

GTN further states that a copy of this filing has been served on GTN's jurisdictional customers and interested state regulatory agencies.

Any person desiring to be heard or to protest said filing should file a motion to intervene or a protest with the Federal Energy Regulatory Commission, 888 First Street, NE., Washington, DC 20426, in accordance with Sections 385.214 or 385.211 of the Commission's Rules and Regulations. All such motions or protests must be filed in accordance with Section 154.210 of the Commission's Regulations. Protests will be considered by the Commission in determining the appropriate action to be taken, but will not serve to make protestants parties to the proceedings. Any person wishing to become a party must file a motion to intervene. This filing is available for review at the Commission in the Public Reference Room or may be viewed on the Commission's Web site at *http://www.ferc.gov* using the eLibrary. Enter the docket number excluding the last three digits in the docket number field to access the document. For assistance, please contact FERC Online Support at *FERCOnlineSupport@ferc.gov* or toll-free at (866) 208–3676, or TTY, contact (202) 502–8659. The Commission strongly encourages electronic filings. See, 18 CFR 385.2001(a)(1)(iii) and the

instructions on the Commission's Web site under the e-Filing link.

Magalie R. Salas,

Secretary.

[FR Doc. E4–1590 Filed 7–15–04; 8:45 am]

BILLING CODE 6717–01–P

DEPARTMENT OF ENERGY

Federal Energy Regulatory Commission

[Docket No. RP04–136–004]

Iroquois Gas Transmission System, L.P.; Notice Tariff Filing

July 12, 2004.

Take notice that on June 30, 2004, Iroquois Gas Transmission System, L.P. (Iroquois) tendered for filing as part of its FERC Gas Tariff, First Revised Volume No. 1, Second Substitute Original Sheet No. 4C, to be effective on July 1, 2004.

Iroquois states that the purpose of this filing is to place the suspended rates into effect on July 1, 2004, in accordance with the Commission's regulations at 18 CFR § 154.206. Iroquois indicates that inasmuch as there have been no Commission orders directing changes to the filed rates, the only required modification is to eliminate ''costs for facilities not certificated and in service as of the proposed effective date.''

Any person desiring to be heard or to protest said filing should file a motion to intervene or a protest with the Federal Energy Regulatory Commission, 888 First Street, NE., Washington, DC 20426, in accordance with Sections 385.214 or 385.211 of the Commission's Rules and Regulations. All such motions or protests must be filed in accordance with Section 154.210 of the Commission's Regulations. Protests will be considered by the Commission in determining the appropriate action to be taken, but will not serve to make protestants parties to the proceedings. Any person wishing to become a party must file a motion to intervene. This filing is available for review at the Commission in the Public Reference Room or may be viewed on the Commission's Web site at *http://www.ferc.gov* using the eLibrary. Enter the docket number excluding the last three digits in the docket number field to access the document. For assistance, please contact FERC Online Support at *FERCOnlineSupport@ferc.gov* or toll-free at (866) 208–3676, or TTY, contact (202) 502–8659. The Commission strongly encourages electronic filings. See, 18 CFR 385.2001(a)(1)(iii) and the instructions on the Commission's Web site under the e-Filing link.

Magalie R. Salas,

Secretary.

[FR Doc. E4–1596 Filed 7–15–04; 8:45 am]

BILLING CODE 6717–01–P

DEPARTMENT OF ENERGY

Federal Energy Regulatory Commission

[Docket No. RP98–18–011]

Iroquois Gas Transmission System, L.P.; Notice of Negotiated Rate

July 12, 2004.

Take notice that on July 1, 2004, Iroquois Gas Transmission System, L.P. (Iroquois) tendered for filing FERC Gas Tariff, First Revised Volume No. 1, Original Sheet No. 6A, proposed to become effective July 1, 2004.

Iroquois states that the revised tariff sheet reflects a negotiated rate between Iroquois and KeySpan Ravenswood, Inc. for transportation under Rate Schedule RTS beginning July 1, 2004, through December 31, 2007.

Iroquois states that copies of its filing were served on all jurisdictional customers and interested state regulatory agencies and all parties to the proceeding.

Any person desiring to be heard or to protest said filing should file a motion to intervene or a protest with the Federal Energy Regulatory Commission, 888 First Street, NE., Washington, DC 20426, in accordance with sections 385.214 or 385.211 of the Commission's Rules and Regulations. All such motions or protests must be filed in accordance with section 154.210 of the Commission's Regulations. Protests will be considered by the Commission in determining the appropriate action to be taken, but will not serve to make protestants parties to the proceedings. Any person wishing to become a party must file a motion to intervene. This filing is available for review at the Commission in the Public Reference Room or may be viewed on the Commission's Web site at *http://www.ferc.gov* using the eLibrary. Enter the docket number excluding the last three digits in the docket number field to access the document. For assistance, please contact FERC Online Support at *FERCOnlineSupport@ferc.gov* or toll-free at (866) 208–3676, or TTY, contact (202) 502–8659. The Commission strongly encourages electronic filings. *See* 18 CFR 385.2001(a)(1)(iii) and the instructions on the Commission's Web site under the e-Filing link.

Magalie R. Salas,

Secretary.

[FR Doc. E4–1606 Filed 7–15–04; 8:45 am]

BILLING CODE 6717–01–P

DEPARTMENT OF ENERGY

Federal Energy Regulatory Commission

[Docket No. RP97–81–018]

Kinder Morgan Interstate Gas Transmission LLC; Notice of Negotiated Rate

July 12, 2004.

Take notice that on June 30, 2004, Kinder Morgan Interstate Gas Transmission LLC (KMIGT) tendered for filing as part of its FERC Gas Tariff, Fourth Revised Volume No. 1–A, the following tariff sheets, to be effective July 1, 2004:

First Revised Sheet No. 4G.01
First Revised Sheet No. 4K
Original Sheet No. 4L
Original Sheet No. 4M

The above-referenced tariff sheets reflect a negotiated rate contract effective July 1, 2004. KMIGT states that the tariff sheets are being filed pursuant to Section 36 of KMIGT's FERC Gas Tariff Fourth Revised Volume No. 1–B, and the procedures prescribed by the Commission in its December 31, 1996, ''Order Accepting Tariff Filing Subject to Conditions'' in Docket No. RP97–81 (77 FERC ¶ 61,350) and the Commission's Letter Orders dated March 28, 1997, and November 30, 2000, in Docket Nos. RP97–81–001 and RP01–70–000, respectively.

KMIGT states that a copy of this filing has been served upon all parties to this proceeding, KMIGT's customers and affected state commissions.

Any person desiring to be heard or to protest said filing should file a motion to intervene or a protest with the Federal Energy Regulatory Commission, 888 First Street, NE., Washington, DC 20426, in accordance with sections 385.214 or 385.211 of the Commission's Rules and Regulations. All such motions or protests must be filed in accordance with section 154.210 of the Commission's Regulations. Protests will be considered by the Commission in determining the appropriate action to be taken, but will not serve to make protestants parties to the proceedings. Any person wishing to become a party must file a motion to intervene. This filing is available for review at the Commission in the Public Reference

Room or may be viewed on the Commission's Web site at *http://www.ferc.gov* using the eLibrary. Enter the docket number excluding the last three digits in the docket number field to access the document. For assistance, please contact FERC Online Support at *FERCOnlineSupport@ferc.gov* or toll-free at (866) 208–3676, or TTY, contact (202) 502–8659. The Commission strongly encourages electronic filings. *See* 18 CFR 385.2001(a)(1)(iii) and the instructions on the Commission's Web site under the e-Filing link.

Magalie R. Salas,

Secretary.

[FR Doc. E4–1605 Filed 7–15–04; 8:45 am]

BILLING CODE 6717–01–P

DEPARTMENT OF ENERGY

Federal Energy Regulatory Commission

[Docket No. RP99–176–101]

Natural Gas Pipeline Company of America; Notice of Negotiated Rate

July 12, 2004.

Take notice that on July 6, 2004, Natural Gas Pipeline Company of America (Natural) tendered for filing to become part of its FERC Gas Tariff, Sixth Revised Volume No. 1, Original Sheet No. 26D.05, to be effective September 1, 2004.

Natural also submits for filing copies of two (2) Rate Schedule FTS service agreements and their related Firm Transportation Negotiated Rate Agreements.

Natural states that the purpose of this filing is to implement two negotiated rate agreements between Natural and Nicor Gas Company, under Natural's Rate Schedule FTS pursuant to Section 49 of the General Terms and Conditions of Natural's Tariff.

Natural states that copies of the filing are being mailed to all parties set out on the Commission's official service list in Docket No. RP99–176.

Any person desiring to be heard or to protest said filing should file a motion to intervene or a protest with the Federal Energy Regulatory Commission, 888 First Street, NE., Washington, DC 20426, in accordance with sections 385.214 or 385.211 of the Commission's Rules and Regulations. All such motions or protests must be filed in accordance with section 154.210 of the Commission's Regulations. Protests will be considered by the Commission in determining the appropriate action to be taken, but will not serve to make protestants parties to the proceedings. Any person wishing to become a party must file a motion to intervene. This filing is available for review at the Commission in the Public Reference Room or may be viewed on the Commission's Web site at *http://www.ferc.gov* using the eLibrary. Enter the docket number excluding the last three digits in the docket number field to access the document. For assistance, please contact FERC Online Support at *FERCOnlineSupport@ferc.gov* or toll-free at (866) 208–3676, or TTY, contact (202) 502–8659. The Commission strongly encourages electronic filings. *See* 18 CFR 385.2001(a)(1)(iii) and the instructions on the Commission's Web site under the e-Filing link.

Magalie R. Salas,

Secretary.

[FR Doc. E4–1607 Filed 7–15–04; 8:45 am]

BILLING CODE 6717–01–P

DEPARTMENT OF ENERGY

Federal Energy Regulatory Commission

[Docket No. RP01–382–014]

Northern Natural Gas Company; Notice of Refund Report

July 12, 2004.

Take notice that on July 1, 2004, Northern Natural Gas Company (Northern) filed several schedules detailing the Carlton buyout and surcharge dollars reimbursed to the appropriate parties.

Northern states that copies of the filing were served upon Northern's customers and interested state commissions.

Any person desiring to protest said filing should file a protest with the Federal Energy Regulatory Commission, 888 First Street, NE., Washington, DC 20426, in accordance with Section 385.211 of the Commission's Rules and Regulations. All such protests must be filed on or before the protest date as shown below. Protests will be considered by the Commission in determining the appropriate action to be taken, but will not serve to make protestants parties to the proceedings. This filing is available for review at the Commission in the Public Reference Room or may be viewed on the Commission's Web site at *http://www.ferc.gov* using the eLibrary link. Enter the docket number excluding the last three digits in the docket number field to access the document. Comments, protests and interventions may be filed electronically via the Internet in lieu of paper. For assistance, please contact FERC Online Support at *FERCOnlineSupport@ferc.gov* or toll-free at (866) 208–3676, or TTY, contact (202) 502–8659. The Commission strongly encourages electronic filings. See, 18 CFR 385.2001(a)(1)(iii) and the instructions on the Commission's Web site under the e-Filing link.

Protest Date: July 19, 2004.

Magalie R. Salas,

Secretary.

[FR Doc. E4–1595 Filed 7–15–04; 8:45 am]

BILLING CODE 6717–01–P

DEPARTMENT OF ENERGY

Federal Energy Regulatory Commission

[Docket No. RP04–176–001]

Northwest Pipeline Corporation; Notice of Compliance Filing

July 12, 2004.

Take notice that on July 2, 2004, Northwest Pipeline Corporation (Northwest) tendered for filing as part of its FERC Gas Tariff, Third Revised Volume No. 1, Substitute Second Revised Sheet No. 26, to be effective July 1, 2004.

Northwest states that the purpose of this filing is to comply with the Commission's order dated June 23, 2004 in this docket by removing the word ''Prearranged'' from the grandfathered unilateral evergreen provision in Rate Schedule TF–1.

Northwest states that a copy of this filing has been served upon each person designated on the official service list complied by the Secretary in this proceeding.

Any person desiring to be heard or to protest said filing should file a motion to intervene or a protest with the Federal Energy Regulatory Commission, 888 First Street, NE., Washington, DC 20426, in accordance with sections 385.214 or 385.211 of the Commission's Rules and Regulations. All such motions or protests must be filed in accordance with section 154.210 of the Commission's Regulations. Protests will be considered by the Commission in determining the appropriate action to be taken, but will not serve to make protestants parties to the proceedings. Any person wishing to become a party must file a motion to intervene. This filing is available for review at the Commission in the Public Reference Room or may be viewed on the Commission's Web site at *http://www.ferc.gov* using the eLibrary. Enter the docket number excluding the last three digits in the docket number field

to access the document. For assistance, please contact FERC Online Support at *FERCOnlineSupport@ferc.gov* or toll-free at (866) 208–3676, or TTY, contact (202) 502–8659. The Commission strongly encourages electronic filings. See, 18 CFR 385.2001(a)(1)(iii) and the instructions on the Commission's Web site under the e-Filing link.

Magalie R. Salas,

Secretary.

[FR Doc. E4–1597 Filed 7–15–04; 8:45 am]

BILLING CODE 6717–01–P

DEPARTMENT OF ENERGY

Federal Energy Regulatory Commission

[Docket No. RP96–359–020]

Transcontinental Gas Pipe Line Corporation; Notice of Negotiated Rate

July 12, 2004.

Take notice that on June 30, 2004, Transcontinental Gas Pipe Line Corporation (Transco) tendered for filing copies of two executed service agreements betweenTransco and KeySpan Gas East Corporation (dba KeySpan Energy Delivery Long Island KeySpan) under Transco's Rate Schedule FT that contain negotiated rates for firm transportation service for Transco's MarketLink and Leidy East Expansion Projects. Transco states that the effective date of these service agreements and the negotiated rates set forth therein is November 1, 2004.

Transco states that copies of the filing are being mailed to its affected customers and interested state commissions.

Any person desiring to be heard or to protest said filing should file a motion to intervene or a protest with the Federal Energy Regulatory Commission, 888 First Street, NE., Washington, DC 20426, in accordance with sections 385.214 or 385.211 of the Commission's Rules and Regulations. All such motions or protests must be filed in accordance with section 154.210 of the Commission's Regulations. Protests will be considered by the Commission in determining the appropriate action to be taken, but will not serve to make protestants parties to the proceedings. Any person wishing to become a party must file a motion to intervene. This filing is available for review at the Commission in the Public Reference Room or may be viewed on the Commission's Web site at *http://www.ferc.gov* using the eLibrary. Enter the docket number excluding the last three digits in the docket number field to access the document. For assistance, please contact FERC Online Support at *FERCOnlineSupport@ferc.gov* or toll-free at (866) 208–3676, or TTY, contact (202) 502–8659. The Commission strongly encourages electronic filings. See, 18 CFR 385.2001(a)(1)(iii) and the instructions on the Commission's Web site under the e-Filing link.

Magalie R. Salas,

Secretary.

[FR Doc. E4–1601 Filed 7–15–04; 8:45 am]

BILLING CODE 6717–01–P

DEPARTMENT OF ENERGY

Federal Energy Regulatory Commission

[Docket No. RP96–359–021]

Transcontinental Gas Pipe Line Corporation; Notice of Negotiated Rate

July 12, 2004.

Take notice that on June 30, 2004, Transcontinental Gas Pipe Line Corporation (Transco) tendered for filing a copy of the executed second amendment to the service agreement with Washington Gas Light Company (WGL) that contains a recalculated negotiated delivery point facilities surcharge (Facilities Surcharge) under Transco's Rate Schedule FT for the costs of the Westmore Road Meter Stations, a delivery point to Washington Gas Light Company (WGL). Transco states that the effective date of this revised facilities surcharge is July 1, 2004.

Transco states that copies of the filing are being mailed to its affected customers and interested State commissions.

Any person desiring to be heard or to protest said filing should file a motion to intervene or a protest with the Federal Energy Regulatory Commission, 888 First Street, NE., Washington, DC 20426, in accordance with sections 385.214 or 385.211 of the Commission's Rules and Regulations. All such motions or protests must be filed in accordance with section 154.210 of the Commission's Regulations. Protests will be considered by the Commission in determining the appropriate action to be taken, but will not serve to make protestants parties to the proceedings. Any person wishing to become a party must file a motion to intervene. This filing is available for review at the Commission in the Public Reference Room or may be viewed on the Commission's Web site at *http://www.ferc.gov* using the eLibrary. Enter the docket number excluding the last three digits in the docket number field to access the document. For assistance, please contact FERC Online Support at *FERCOnlineSupport@ferc.gov* or toll-free at (866) 208–3676, or TTY, contact (202) 502–8659. The Commission strongly encourages electronic filings. *See* 18 CFR 385.2001(a)(1)(iii) and the instructions on the Commission's Web site under the e-Filing link.

Magalie R. Salas,

Secretary.

[FR Doc. E4–1602 Filed 7–15–04; 8:45 am]

BILLING CODE 6717–01–P

DEPARTMENT OF ENERGY

Federal Energy Regulatory Commission

[Docket No. ER03–836–004, et al.]

New York Independent System Operator, Inc., et al.; Electric Rate and Corporate Filings

July 8, 2004.

The following filings have been made with the Commission. The filings are listed in ascending order within each docket classification.

1. New York Independent System Operator, Inc.

[Docket No. ER03–836–004]

Take notice that on July 6, 2004 New York Independent System Operator, Inc. (NYISO), in compliance with the Commission's order issued May 7, 2004 in Docket No. ER03–836–001, submitted for filing a letter providing a timetable setting forth a schedule for full implementation of a method for allowing customers to self-supply their own operating reserves.

NYISO states that copies of this filing are being served on all the parties designated on the official services list maintained by the Secretary of the Commission in Docket No ER04–836–001.

Comment Date: July 27, 2004.

2. Reliant Energy Etiwanda, Inc.

[Docket No. ER04–959–001]

Take notice that on July 7, 2004 Reliant Energy Etiwanda, Inc. (Etiwanda), filed a supplement to its June 25, 2004 filing of Rate Schedule FERC No. 2, a Must-Run Service Agreement and a related letter agreement between Etiwanda and the California Independent System Operator Corporation.

Comment Date: July 16, 2004.

Standard Paragraph

Any person desiring to intervene or to protest this filing should file with the

Federal Energy Regulatory Commission, 888 First Street, NE., Washington, DC 20426, in accordance with Rules 211 and 214 of the Commission's Rules of Practice and Procedure (18 CFR 385.211 and 385.214). Protests will be considered by the Commission in determining the appropriate action to be taken, but will not serve to make protestants parties to the proceeding. Any person wishing to become a party must file a motion to intervene. All such motions or protests should be filed on or before the comment date, and, to the extent applicable, must be served on the applicant and on any other person designated on the official service list. This filing is available for review at the Commission or may be viewed on the Commission's Web site at *http://www.ferc.gov*, using the ''FERRIS'' link. Enter the docket number excluding the last three digits in the docket number field to access the document. For assistance, call (202) 502–8222 or TTY, (202) 502–8659. Protests and interventions may be filed electronically via the Internet in lieu of paper; see 18 CFR 385.2001(a)(1)(iii) and the instructions on the Commission's Web site under the ''e-Filing'' link. The Commission strongly encourages electronic filings.

Magalie R. Salas,

Secretary.

[FR Doc. E4–1588 Filed 7–15–04; 8:45 am]

BILLING CODE 6717–01–P

DEPARTMENT OF ENERGY

Federal Energy Regulatory Commission

[Docket No. EC04–127–000, et al.]

National Energy & Gas Transmission, Inc., et al.; Electric Rate and Corporate Filings

July 9, 2004.

The following filings have been made with the Commission. The filings are listed in ascending order within each docket classification.

1. National Energy & Gas Transmission, Inc.

[Docket No. EC04–127–000]

Take notice that on July 2, 2004, National Energy & Gas Transmission, Inc. filed with the Federal Energy Regulatory Commission an application pursuant to section 203 of the Federal Power Act for authorization to transfer in excess of 5 percent of the new NEGT common stock to certain investment funds, which are creditors of NEGT, in order to implement a proposed plan of reorganization filed with the United States Bankruptcy Court for the District of Maryland (Greenbelt Division) as more fully described in the application.

Comment Date: July 23, 2004.

2. EK Holding I, LLC, and EK Holding III, LLC

[Docket No. EC04–128–000]

Take notice that on July 6, 2004, EK Holding I, LLC (EKH I) and EK Holding III, LLC (EKH III) (collectively, Applicants) filed an application pursuant to section 203 of the Federal Power Act (FPA), 16 U.S.C. 824b (2003), and part 33 of the Commission's regulations, 18 CFR 33.1, *et seq.* (2003). The Applicants request that the Commission provide any necessary approvals under section 203 of the FPA for the Applicants to engage in an internal corporate reorganization that will result in the merger of EKH III with and into EKH I. Although Applicants state that they do not believe that the reorganization will effect a disposition of jurisdictional facilities under section 203, Applicants accede, without prejudice, to the Commission's jurisdiction over the reorganization under section 203, in order to facilitate the closing of the reorganization and to ensure compliance with the Commission's requirements should section 203 be deemed to be applicable. Applicants request approval of the reorganization as soon as possible, but no later than August 20, 2004.

Comment Date: July 27, 2004.

Standard Paragraph

Any person desiring to intervene or to protest this filing should file with the Federal Energy Regulatory Commission, 888 First Street, NE., Washington, DC 20426, in accordance with Rules 211 and 214 of the Commission's Rules of Practice and Procedure (18 CFR 385.211 and 385.214). Protests will be considered by the Commission in determining the appropriate action to be taken, but will not serve to make protestants parties to the proceeding. Any person wishing to become a party must file a motion to intervene. All such motions or protests should be filed on or before the comment date, and, to the extent applicable, must be served on the applicant and on any other person designated on the official service list. This filing is available for review at the Commission or may be viewed on the Commission's Web site at *http://www.ferc.gov*, using the ''FERRIS'' link. Enter the docket number excluding the last three digits in the docket number filed to access the document. For assistance, call (202) 502–8222 or TTY, (202) 502–8659. Protests and interventions may be filed electronically via the Internet in lieu of paper; see 18 CFR 385.2001(a)(1)(iii) and the instructions on the Commission's Web site under the ''e-Filing'' link. The Commission strongly encourages electronic filings.

Magalie R. Salas,

Secretary.

[FR Doc. E4–1589 Filed 7–15–04; 8:45 am]

BILLING CODE 6717–01–P

DEPARTMENT OF ENERGY

Federal Energy Regulatory Commission

[Docket No. EC04–125–000, et al.]

El Paso CGP Company, et al.; Electric Rate and Corporate Filings

July 1, 2004.

The following filings have been made with the Commission. The filings are listed in ascending order within each docket classification.

1. El Paso CGP Company, El Paso Merchant Energy—Petroleum Company, Rensselaer Plant Holdco, L.L.C., Fulton Cogeneration Associates, L.P., Lion Capital Management, LLC, Fimab, Promeneur & Hausmann, Inc.

[Docket No. EC04–125–000]

Take notice that on June 25, 2004, El Paso CGP Company (CGP), El Paso Merchant Energy—Petroleum Company (EPMEPC), Rensselaer Plant Holdco, L.L.C. (RPH), Fulton Cogeneration Associates, L.P. (FCA), Lion Capital Management, LLC (Lion Capital and Fimab, Promeneur & Hausmann, Inc. (FPH) (jointly, Applicants) filed with the Federal Energy Regulatory Commission an application pursuant to section 203 of the Federal Power Act requesting that the Commission: (i) approve the internal corporate transfer of membership interests in FCA from CGP to RPH and EPMEPC and (ii) authorize the subsequent sale and transfer of RPH's and EPMEPC's partnership interests in FCA to Lion Capital and FPH. Applicants state that these transactions will (i) effectuate an internal corporate reorganization resulting in an indirect change of control over the FPA jurisdictional facilities owned by FCA, and (ii) result in a change of control over the jurisdictional facilities owned by FCA. Applicants requested privileged treatment for certain exhibits pursuant to 18 CFR 33.9 and 388.112.

Comment Date: July 16, 2004.

2. Northern Iowa Windpower II LLC

[Docket Nos. EC04–126–000 and ER02–2085–002]

Take notice that on June 29, 2004, Northern Iowa Windpower II LLC (the Applicant), submitted an application pursuant to section 203 of the Federal Power Act seeking authorization for a series of transactions that collectively result in the transfer of indirect control of Applicant's jurisdictional facilities, including rate schedules for sales of power at wholesale and jurisdictional books and records. Applicant states they are filing a notice of change in status with respect to the rate schedule, and Applicant requests certain waivers.

Applicant states that the transactions will have no effect on competition, rates or regulations and are in the public interest.

Comment Date: July 22, 2004.

3. Westridge Windfarm, LLC

[Docket No. EG04–83–000]

Take notice that on June 28, 2004, Westridge Windfarm, LLC (Westridge) filed with the Federal Energy Regulatory Commission an application for determination of exempt wholesale generator status pursuant to part 365 of the Commission's regulations.

Westridge states that it owns and operates a 1.9 MW wind energy conversion facility in Woodstock, Minnesota, which sells its entire output to Northern States Power Company exclusively at wholesale pursuant to a long-term power purchase agreement. Westridge further states that the facility interconnects with NSP on an NSP 69 kV transmission line in Minnesota and the Westridge facility includes only those interconnection facilities needed to deliver energy from the facility to NSP for its wholesale sale and purchase.

Comment Date: July 19, 2004.

4. TG Windfarm, LLC

[Docket No. EG04–84–000]

Take notice that on June 28, 2004, TG Windfarm, LLC (TG) filed with the Federal Energy Regulatory Commission an application for determination of exempt wholesale generator status pursuant to part 365 of the Commission's regulations.

TG states that it is a Minnesota limited liability company owned and operated by Tyler Juhl, a Minnesota resident. TG further states that Edison Capital, an indirect, wholly-owned subsidiary of Edison International, proposes to acquire 99% of TG and Edison International is the parent company of Southern California Edison Company, a public utility under the Federal Power Act.

TG states that no State regulatory approvals or determinations were sought or received with respect to the facility or the power purchase agreement.

Comment Date: July 19, 2004.

5. Bisson Windfarm, LLC

[Docket No. EG04–85–000]

Take notice that on June 28, 2004, Bisson Windfarm, LLC (Bisson) filed with the Federal Energy Regulatory Commission an application for determination of exempt wholesale generator status pursuant to part 365 of the Commission's regulations.

Bisson states that it is a Minnesota limited liability company owned and operated by Peter and Maurine Bisson, Minnesota residents. Bisson further states that Edison Capital, an indirect, wholly-owned subsidiary of Edison International, proposes to acquire 99% of Bisson and Edison International is the parent company of Southern California Edison Company, a public utility under the Federal Power Act.

TG states that no state regulatory approvals or determinations were sought or received with respect to the facility or the power purchase agreement.

Comment Date: July 19, 2004.

6. K-Brink Windfarm, LLC

[Docket No. EG04–86–000]

Take notice that on June 28, 2004, K-Brink Windfarm, LLC (K-Brink) filed with the Federal Energy Regulatory Commission an application for determination of exempt wholesale generator status pursuant to part 365 of the Commission's regulations.

K-Brink states that it is a Minnesota limited liability company owned and operated by Aleanor Kruisselbrink, a Minnesota resident. K-Brink further states that Edison Capital, an indirect, wholly-owned subsidiary of Edison International, proposes to acquire 99% of K-Brink and Edison International is the parent company of Southern California Edison Company, a public utility under the Federal Power Act.

K-Brink states that no State regulatory approvals or determinations were sought or received with respect to the facility or the power purchase agreement.

Comment Date: July 19, 2004.

7. Southwest Power Pool, Inc.

[Docket No. ER04–434–002]

Take notice that on June 29, 2004, Southwest Power Pool, Inc. (SPP) submitted to the Commission a compliance filing providing for changes to its currently effective Open Access Transmission Tariff (OATT). SPP states that it filed a modification to its *pro forma* agreement allocating responsibilities between SPP and the transmission owners with regard to generation interconnections, as required by the Commission's order issued on June 21, 2004, in Docket No. ER04–434–001. SPP requested an effective date of April 26, 2004, in order to coincide with the effective date of the compliance filing submitted by SPP on April 19, 2004.

SPP states that it has served a copy of its transmittal letter on each of its Members and Customers, as well as on all generators in existing generation queue. SPP indicated that a complete copy of this filing will be posted on the SPP Web site *http://www.spp.org*, and is also being served on all affected State commissions.

Comment Date: July 20, 2004.

8. Central Maine Power Company

[Docket No. ER04–963–000]

Take notice that on June 29, 2004, Central Maine Power Company (CMP) submitted for filing an unexecuted Service Agreement for Long Term Firm Local Point-to-Point Transmission Service with Kezar Falls Hydro, LLC.

CMP states that copies of this filing have been served on the Maine Public Utilities Commission, and the persons identified on the enclosed Service List.

Comment Date: July 20, 2004.

9. Midwest Independent Transmission System Operator, Inc.

[Docket No. ER04–964–000]

Take notice that on June 29, 2004, Midwest Independent Transmission System Operator, Inc. (Midwest ISO) submitted for filing pursuant to section 205 of the Federal Power Act and section 35.12 of the Commission's regulations, 18 CFR 35.12 (2003), the Interconnection Agreement among Southern Indiana Gas and Electric Company d/b/a Vectren Energy Delivery, the Midwest ISO and Cinergy Services, Inc. Midwest requests an effective date of June 1, 2004.

Midwest ISO states that a copy of this filing was served on all parties.

Comment Date: July 20, 2004.

10. Consolidated Edison Solutions, Inc.

[Docket No. ER04–965–000]

Take notice that on June 29, 2004, Consolidated Edison Solutions, Inc. (CES) submitted for filing an amendment to its Tariff for the Wholesale Sale of Electricity at Market-Based Rates to include, among other things, the Market Behavior Rules by the Commission order issued November 17,

2003, in Docket No. EL01–118–000, Investigation of Terms and Conditions of Public Utility Market-Based Rate Authorizations, 105 FERC ¶ 61,218 (2003). CES requests an effective date of December 17, 2003.

CES states that it has served this filing on all parties to Docket No. ER04–965–000 and on the New York Public Service Commission.

Comment Date: July 20, 2004.

11. Niagara Mohawk Power Corporation

[Docket No. ER04–966–000]

Take notice that on June 29, 2004, Niagara Mohawk Power Corporation, (Niagara Mohawk) submitted for filing its Second Revised Interconnection Service Agreement No. 319 between Niagara Mohawk and Hydro One Networks Inc., and, its Second Revised Interconnection Service Agreement No. 320 between Niagara Mohawk and Independent Electricity Market Operator.

Niagara Mohawk states that a copy of this filing will be served upon Hydro One and IMO, as well as the New York Independent System Operator, Inc., the New York Public Service Commission, and any other party listed on the Commission's official service list in Docket No. ER03–502.

Comment Date: July 20, 2004.

12. Central Maine Power Company

[Docket No. ER04–967–000]

Take notice that on June 29, 2004, Central Maine Power Company (CMP) submitted for filing an unexecuted Service Agreement for Long Term Firm Local Point-to-Point Transmission Service with Ledgemere Hydro, LLC. CMP requests an effective date of December 23, 2003.

CMP states that copies of this filing have been served on the Maine Public Utilities Commission, and the persons identified on the Service List.

Comment Date: July 20, 2004.

13. Central Maine Power Company

[Docket No. ER04–968–000]

Take notice that on June 29, 2004, Central Maine Power Company (CMP) submitted for filing an unexecuted Service Agreement for Local Network Transmission Service and an unexecuted Service Agreement for Long Term Firm Local Point-to-Point Transmission Service with Messalonskee Stream Hydro, LLC. CMP requests an effective date of December 23, 2003.

CMP states that copies of this filing have been served on the Maine Public Utilities Commission, and the persons identified on the Service List.

Comment Date: July 20, 2004.

14. Florida Power Corporation

[Docket No. ER04–969–000]

Take notice that on June 29, 2004, Florida Power Corporation (FPC) tendered for filing an executed DG Telogia Generating Facility Parallel Operation Agreement between FPC and Seminole Electric Cooperative. FPC is requesting an effective date of June 1, 2004, for this Rate Schedule.

FPC states that a copy of the filing was served upon the Florida Public Service Commission and the North Carolina Utilities Commission.

Comment Date: July 20, 2004.

15. FirstEnergy Solutions Corp.

[Docket No. ER04–970–000]

Take notice that on June 29, 2004, FirstEnergy Solutions Corp. (FE Solutions) tendered for filing a Redispatch Agreement with PJM Interconnection, L.L.C. (PJM). FE Solutions states that the Redispatch Agreement establishes the rates, terms and conditions under which FE Solutions may redispatch Units 3, 4 and 5 of the W.H. Sammis Plant in Stratton, Ohio upon the request of PJM to alleviate transmission constraints on the PJM transmission system. FE Solutions requests an effective date of July 1, 2004.

FE Solutions states that a copy of this filing has been served on PJM and regulators in Ohio.

Comment Date: July 20, 2004.

16. Golden Spread Electric Cooperative, Inc.

[Docket No. ER04–971–000]

Take notice that on June 29, 2004, Golden Spread Electric Cooperative, Inc. (Golden Spread) tendered for filing with the Commission a Fourth Informational Filing to Golden Spread Rate Schedule No. 35. Golden Spread states that The Fourth Informational Filing updates the formulary fixed costs associated with replacement energy sales by Golden Spread to Southwestern Public Service Company (Southwestern).

Golden Spread states that a copy of this filing has been served upon Southwestern.

Comment Date: July 20, 2004.

17. Midwest Independent Transmission System Operator, Inc.

[Docket No. ES04–40–000]

Take notice that on June 24, 2004, Midwest Independent Transmission System Operator, Inc. (Midwest ISO) submitted an application pursuant to section 204 of the Federal Power Act seeking authorization to make long-term borrowings in an amount not to exceed $80 million at any one time.

Midwest ISO also requests a waiver from the Commission's competitive bidding and negotiated placement requirements at 18 CFR 34.2.

Comment Date: July 22, 2004.

Standard Paragraph

Any person desiring to intervene or to protest this filing should file with the Federal Energy Regulatory Commission, 888 First Street, NE., Washington, DC 20426, in accordance with Rules 211 and 214 of the Commission's Rules of Practice and Procedure (18 CFR 385.211 and 385.214). Protests will be considered by the Commission in determining the appropriate action to be taken, but will not serve to make protestants parties to the proceeding. Any person wishing to become a party must file a motion to intervene. All such motions or protests should be filed on or before the comment date, and, to the extent applicable, must be served on the applicant and on any other person designated on the official service list. This filing is available for review at the Commission or may be viewed on the Commission's Web site at http://www.ferc.gov, using the ''FERRIS'' link. Enter the docket number excluding the last three digits in the docket number filed to access the document. For assistance, call (202) 502–8222 or TTY, (202) 502–8659. Protests and interventions may be filed electronically via the Internet in lieu of paper; *see* 18 CFR 385.2001(a)(1)(iii) and the instructions on the Commission's Web site under the ''e-Filing'' link. The Commission strongly encourages electronic filings.

Magalie R. Salas,

Secretary.

[FR Doc. E4–1609 Filed 7–15–04; 8:45 am]

BILLING CODE 6717–01–P

DEPARTMENT OF ENERGY

Federal Energy Regulatory Commission

[Project No. 2145–060]

Public Utility District No. 1 of Chelan County (Chelan PUD); Notice of Application Tendered for Filing With the Commission, Establishing Procedural Schedule for Relicensing and a Deadline for Submission of Final Amendments

July 12, 2004.

Take notice that the following hydroelectric application and final preliminary draft Environmental

Assessment have been filed with the Federal Energy Regulatory Commission (Commission) and are available for public inspection.

a. *Type of Application:* New major license.

b. *Project No.:* 2145–060.

c. *Date Filed:* June 29, 2004.

d. *Applicant:* Public Utility District No. 1 of Chelan County (Chelan PUD).

e. *Name of Project:* Rocky Reach Hydroelectric Project.

f. *Location:* On the Columbia River, near the town of Entiat, in Chelan County, Washington. The project occupies Federal lands.

g. *Filed Pursuant to:* Federal Power Act, 16 U.S.C. 791(a)–825(r).

h. *Applicant Contact:* Gregg Carrington, Licensing Director, Public Utility District No. 1 of Chelan County, 327 North Wenatchee Avenue, Wenatchee, WA 98801; telephone (509) 661–4178 or by e-mail to *gregg@chelanpud.org*.

i. *FERC Contact:* Kim Nguyen, Federal Energy Regulatory Commission, 888 First Street, NE., Washington, DC 20426; telephone (202) 502–6105 or by e-mail at *kim.nguyen@ferc.gov*.

j. *Cooperating Agencies:* We are asking Federal, State, and local agencies, and Indian tribes with jurisdiction and/or special expertise with respect to environmental issues to cooperate with us in the preparation of an environmental document pursuant to the National Environmental Policy Act (NEPA). Agencies and tribes who would like to request cooperating agency status should follow the instructions described in item k below.

k. Deadline for filing requests for cooperating agency status: September 10, 2004.

All documents (original and eight copies) must be filed with: Magalie R. Salas, Secretary, Federal Energy Regulatory Commission, 888 First Street, NE., Washington, DC 20426. Please put the project name ''Rocky Reach Hydroelectric Project'' and project number ''P–2145–060'' on the first page of all documents.

The Commission's Rules of Practice require all intervenors filing documents with the Commission to serve a copy of that document on each person on the official service list for the project. Further, if an intervenor files comments or documents with the Commission relating to the merits of an issue that may affect the responsibilities of a particular resource agency, they must also serve a copy of the document on that resource agency.

Requests for cooperating agency status may be filed electronically via the Internet in lieu of paper. *See* 18 CFR 385.2001(a)(1)(iii) and the instructions on the Commission's Web site *http://www.ferc.gov* under the ''e-Filing'' link. The Commission strongly encourages electronic filings.

l. This application is not ready for environmental analysis at this time.

m. The existing Rocky Reach Project consists of: (1) A 130-foot-high and 2,847-foot-long concrete gravity dam, with an 8,235-acre impoundment at normal maximum pool elevation of 707 feet National Geodetic Vertical Datum; (2) a 1,088-foot-long, 206-foot-wide powerhouse containing 11 turbine-generator units, Units 1 through 7 with an authorized capacity of 105,000 kilowatts (kW) and Units 8 through 11 with an authorized capacity of 125,400 kW; (3) a spillway that is integral to the dam and consists of twelve 50-foot-wide bays; (4) non-overflow sections; (5) fish passage facilities; (6) five sets of 230-kilovolt transmission lines that convey power from the powerhouse to the switchyard; and (7) appurtenant facilities.

n. A copy of the application and final preliminary draft environmental assessment are available for review in the Commission's Public Reference Room 888 First Street, NE., Room 2A, Washington, DC 20426 or may be viewed on the Commission's Web site *http://www.ferc.gov* using the ''eLibrary'' link. Enter the docket number excluding the last three digits in the docket number field to access the document. For assistance, call toll-free 866–208–3676 or e-mail FERC Online Support at *FERCOnlineSupport@ferc.gov*. The TTY number is (202) 502–8659. A copy is also available for inspection and reproduction at the address in item h above.

You may also register online at *http://www.ferc.gov/docs-filing/esubscription.asp* to be notified via email of new filings and issuances related to this or other pending projects. For assistance, contact FERC Online Support.

o. With this notice, we are initiating consultation with the Washington State Historic Preservation Officer, as required by section 106 of the National Historic Preservation Act and the regulations of the Advisory Council on Historic Preservation at 36 CFR 800.4.

p. *Procedural Schedule:* During 1999 and 2000 a public scoping process was conducted, as outlined in Chelan PUD's final preliminary draft Environmental Assessment. This application will be processed according to the following Hydro Licensing Schedule. The Commission staff intends to prepare an Environmental Impact Statement for the project in accordance with NEPA. Revisions to the schedule may be made as appropriate.

Issue Acceptance or Deficiency Letter: August 2004
Notice Accepting Application and Requesting Motions to Intervene: August 2004
Notice Soliciting Final Terms and Conditions: August 2004
Notice of the Draft Environmental Impact Statement (EIS): March 2005
Notice of the Final EIS: November 2005
Ready for Commission Decision on the Application: May 2006

Final amendments to the application must be filed with the Commission no later than 30 days from the issuance date of the notice soliciting comments and final terms and conditions.

Magalie R. Salas,

Secretary.

[FR Doc. E4–1608 Filed 7–15–04; 8:45 am]

BILLING CODE 6717–01–P

DEPARTMENT OF ENERGY

Federal Energy Regulatory Commission;

[Docket No. PF04–11–000]

Sempra Energy International, Sempra Energy LNG; Notice of Meeting Attendance

July 12, 2004.

The staff of the Federal Energy Regulatory Commission will attend Sempra LNG's Open House meeting for the Port Arthur LNG and Pipeline Project. The meeting will be held on Tuesday, July 20, 2004, from 4 to 6 p.m. (c.s.t.) at: Carl A. Parker Multi-Purpose Center, Lamar University State College, 1800 Lake Shore Drive, Port Arthur, Texas.

We will be conducting a site visit of the project on Wednesday, July 21, 2004. We will meet at 8 a.m. at the LNG terminal site. We will view various portions of the project, starting with the LNG terminal site. Interested persons must provide their own transportation.

For further information on the meeting location for the site visit, please contact Marvin Ivey at 619–696–2036 or 713–515–0624.

Magalie R. Salas,

Secretary.

[FR Doc. E4–1592 Filed 7–15–04; 8:45 am]

BILLING CODE 6717–01–P

DEPARTMENT OF ENERGY

Federal Energy Regulatory Commission

[Docket No. RM98–1–000]

Records Governing Off-the-Record Communications; Public Notice

July 12, 2004.

This constitutes notice, in accordance with 18 CFR 385.2201(b), of the receipt of exempt and prohibited off-the-record communications.

Order No. 607 (64 FR 51222, September 22, 1999) requires Commission decisional employees, who make or receive an exempt or prohibited off-the-record communication relevant to the merit's of a contested on-the-record proceeding, to deliver a copy of the communication, if written, or a summary of the substance of any oral communication, to the Secretary.

Prohibited communications will be included in a public, non-decisional file associated with, but not a part of, the decisional record of the proceeding. Unless the Commission determines that the prohibited communication and any responses thereto should become a part of the decisional record, the prohibited off-the-record communication will not be considered by the Commission in reaching its decision. Parties to a proceeding may seek the opportunity to respond to any facts or contentions made in a prohibited off-the-record communication, and may request that the Commission place the prohibited communication and responses thereto in the decisional record. The Commission will grant such a request only when it determines that fairness so requires. Any person identified below as having made a prohibited off-the-record communication shall serve the document on all parties listed on the official service list for the applicable proceeding in accordance with Rule 2010, 18 CFR 385.2010.

Exempt off-the-record communications will be included in the decisional record of the proceeding, unless the communication was with a cooperating agency as described by 40 CFR 1501.6, made under 18 CFR 385.2201(e)(1)(v).

The following is a list of prohibited and exempt communications recently received in the Office of the Secretary. The communications listed are grouped by docket numbers. These filings are available for review at the Commission in the Public Reference Room or may be viewed on the Commission's Web site at *http://www.ferc.gov* using the eLibrary (FERRIS) link. Enter the docket number excluding the last three digits in the docket number field to access the document. For Assistance, please contact FERC, Online Support at *FERCOnlineSupport@ferc.gov* or toll free at (866) 208–3676, or for TTY, contact (202) 502–8659.

Docket No.	Date filed	Presenter or requester
Prohibited		
1. CP04–58–000	7–8–04	Craig Sazama, *et al.*[1]
2. Project No. 516–374	6–14–04	James L. Leslie, Jr.
3. Project No. 2082–027	6–23–04	Seanessy Gavin.
4. Project No. 2114–000	6–23–04	Camille Pleasants.
Exempt		
1. CP03–80–000	6–23–04	Hon. Thomas R. Carper.
2. CP03–80–000	6–28–04	Hon. Joseph R. Biden, Jr.
3. CP04–36–000, CP04–41–000, CP04–42–000, CP04–43–000, AD04–6–000	6–28–04	Hon. John F. Kerry.
4. CP04–36–000	7–8–04	Larry Brown.
5. CP04–37–000, CP04–47–000, CP03–75–000	6–21–04	Hon. James M. Imhofe.
6. CP04–37–000, CP04–75–000	6–23–04	Hon. Ron Paul.
		Hon Tom Delay.
		Hon. Solomon Ortiz.
		Hon. Ruben Hinojosa.
7. CP04–43–000, CP04–36–000, CP04–41–000, CP04–42–000	6–28–04	Hon. Edward M. Kennedy.
		Hon. John F. Kerry.
		Hon. Barney Frank.
		Hon. James P. McGovern.
8. CP04–223–000	6–10–04	Hon. Jack Reed.
		Hon. Lincoln D. Chafee.
		Hon. Patrick J. Kennedy.
		Hon. James R. Langevin.
9. CP04–223–000, CP04–293–000	6–28–04	Hon. Lincoln D. Chafee.
10. EL03–180–000, PA02–2–000, EL00–98–000, EL02–114–000, EL00–95–000, EL02–113–000, EL02–60–000.	6–30–04	Hon. Arnold Schwarzenegger.
11. EL03–180–000, EL02–113–000, EL02–114–000, EL02–115–000, EL03–154–000	7–6–04	Hon. Maria Cantwell.
12. ER03–246–000	6–28–04	Hon. Lawrence G. Miller.
13. ER04–691–000	6–29–04	Hon. Byron L. Dorgan.
		Hon. Norm Coleman.
		Hon. Mark Dayton.
		Hon. Kent Conrad.
		Hon. Tim Johnson.
		Hon. Tom Daschle.
		Hon. Conrad Burns.
		Hon. Chuck Grassley.
		Hon. Max Baucus.
		Hon. Tom Harkin.
14. Project No. 516–000	6–30–04	Hon. Joe Wilson.

[1] This communication is one among numerous form letters sent to the Commission by the Greenpeace, USA organization. Only representative samples of these prohibited non-decisional documents are posted in this docket on the Commission's eLibrary system (*http://www.ferc.gov*).

Magalie R. Salas,
Secretary.
[FR Doc. E4–1594 Filed 7–15–04; 8:45 am]
BILLING CODE 6717–01–P

DEPARTMENT OF ENERGY

Federal Energy Regulatory Commission

[Docket No. RM04–10–000]

Notice Format and Technical Corrections; Notice of Availability of Notice Formats Pursuant to FERC Order No. 647

July 12, 2004.

Take notice that, pursuant to Order No. 647, issued June 3, 2004, the Federal Energy Regulatory Commission has posted on its Web site the forms of notice required to be included in various types of filings. The formats are available at *www.ferc.gov* under the Documents and Filing menu. Select Notice Formats.

The Commission's default format for issuances is Microsoft Word. To accommodate filers who may not have Word, the formats are also available in Rich Text Format. Formats are available for the notices required by:

1. 18 CFR 33.6: Notice of Application to Authorize Disposition of Jurisdictional Facilities.
2. 18 CFR 34.3: Application for Issuance of Securities.
3. 18 CFR 35.8(b): Electric Service Tariff Filings:
A. Filing of Initial Rate Schedules or Changes in Rate Schedules.
B. Compliance Filing in Response to a Commission Order.
4. 18 CFR 36.1(b)(1): Application for Transmission Services Under Section 211 of the Federal Power Act.
5. 18 CFR 154.209: Notice of Proposed Changes in Gas Tariff or of Compliance Filing:
A. Filing of Initial Rate Schedules or Revisions to Gas Tariff, and Compliance with Rulemakings.
B. Compliance Filing in Response to a Commission Order.
6. 18 CFR 157.6(b)(7): Application for Certificates of Public Convenience and Necessity and for Application for Abandonment Authorization.
7. 18 CFR 157.205(b)(5): Prior Notice Pursuant to Blanket Certificate under Section 7 of the Natural Gas Act.
8. 18 CFR 292.207(b)(4): Application for Qualifying Facility Status.
9. 18 CFR 358.1(d): Standards of Conduct—Request for Exemption.
10. 18 CFR 365.3(c): Application for Exempt Wholesale Generator Status.
11. 18 CFR 385.206(b)(10): Complaints (Rule 206).
12. 18 CFR 385.1104(a)(5): Petition for Adjustment Under the Natural Gas Policy Act.

The formats are also available in hardcopy format in the Commission's Public Reference Room located at 888 First Street, NE., Washington, DC 20426.

Magalie R. Salas,
Secretary.
[FR Doc. E4–1593 Filed 7–15–04; 8:45 am]
BILLING CODE 6717–01–P

ENVIRONMENTAL PROTECTION AGENCY

[OAR–2004–0071; FRL–7787–9]

Agency Information Collection Activities; Submission to OMB for Review and Approval; Comment Request; Information Collection Activities Associated With the Best Workplaces for Commuters Program, EPA ICR Number 2053.01

AGENCY: Environmental Protection Agency (EPA).

ACTION: Notice.

SUMMARY: In compliance with the Paperwork Reduction Act (44 U.S.C. 3501 *et seq.*), this document announces that an Information Collection Request (ICR) has been forwarded to the Office of Management and Budget (OMB) for review and approval. This is a request a new collection. This ICR describes the nature of the information collection and its estimated burden and cost.

DATES: Additional comments may be submitted on or before August 16, 2004.

ADDRESSES: Submit your comments, referencing docket ID number OAR–2004–0071 to (1) EPA online using EDOCKET (our preferred method), by email to Group A–AND–R–*DOCKET@EPA.gov*, or by mail to: EPA Docket Center, Environmental Protection Agency,Office of Air and Radiation Docket (Mail Code 6102T), 1200 Pennsylvania Ave., NW., Washington, DC 20460, and (2) OMB at: Office of Information and Regulatory Affairs, Office of Management and Budget (OMB), Attention: Desk Officer for EPA, 725 17th Street, NW., Washington, DC 20503.

FOR FURTHER INFORMATION CONTACT: Elizabeth Lonoff, Transportation and Regional Programs Division (Mail Code 6406J), Environmental Protection Agency, 1200 Pennsylvania Ave., NW., Washington, DC 20460; telephone number: 202–343–9147; fax number: 202–343–2800; e-mail address: *lonoff.elizabeth@epa.gov*.

SUPPLEMENTARY INFORMATION: EPA has submitted the following ICR to OMB for review and approval according to the procedures prescribed in 5 CFR 1320.12. On April 9, 2002 (*67 FR 17069*), EPA sought comments on this ICR pursuant to 5 CFR 1320.8(d). EPA received no comments.

EPA has established a public docket for this ICR under Docket ID No. OAR–2004–0071, which is available for public viewing at the Office of Air and Radiation Docket in the EPA Docket Center (EPA/DC), EPA West, Room B102, 1301 Constitution Ave., NW., Washington, DC. The EPA Docket Center Public Reading Room is open from 8:30 a.m. to 4:30 p.m., Monday through Friday, excluding legal holidays. The telephone number for the Reading Room is (202) 566–1744, and the telephone number for the Office of Air and Radiation Docket is (202) 566–1742. An electronic version of the public docket is available through EPA Dockets (EDOCKET) at *http://www.epa.gov/edocket*. Use EDOCKET to submit or view public comments, access the index listing of the contents of the public docket, and to access those documents in the public docket that are available electronically. Once in the system, select ''search,'' then key in the docket ID number identified above.

Any comments related to this ICR should be submitted to EPA and OMB within 30 days of this notice. EPA's policy is that public comments, whether submitted electronically or in paper, will be made available for public viewing in EDOCKET as EPA receives them and without change, unless the comment contains copyrighted material, CBI, or other information whose public disclosure is restricted by statute. When EPA identifies a comment containing copyrighted material, EPA will provide a reference to that material in the version of the comment that is placed in EDOCKET. The entire printed comment, including the copyrighted material, will be available in the public docket. Although identified as an item in the official docket, information claimed as CBI, or whose disclosure is otherwise restricted by statute, is not included in the official public docket, and will not be available for public viewing in EDOCKET. For further information about the electronic docket, see EPA's **Federal Register** notice describing the electronic docket at *67 FR 38102* (May 31, 2002), or go to *www.epa.gov/edocket*.

Title: Information Collection Activities Associated with the Best Workplaces for Commuters.

Abstract: Best Workplaces for Commuters SM (BWC; originally known

as the Commuter Choice Leadership Initiative) is a unique designation granted by the U.S. Environmental Protection Agency (EPA) and the U.S. Department of Transportation (DOT) to employers that offer superior commuter benefits to their employees. EPA is partnering with a variety of national, state, regional, and local organizations to challenge U.S. employers to meet a National Standard of Excellence in commuter benefits and to recognize those that do as ''Best Workplaces for Commuters.'' The program highlights the environmental and congestion relief benefits along with the potential financial benefits of offering employee commuter benefits, such as improved recruiting and retention, tax savings, and other cost savings. EPA works to gain public recognition for companies recognized as Best Workplaces for Commuters and provides networking, opportunities training, web-based tools, and one-on-one assistance for its partners. Employers wishing to join BWC are asked to submit the BWC Application documenting their intent to provide such benefits, to submit an Annual Check-in Form confirming their continued participation and updating contact information, and to disseminate a Employee Survey when they are randomly selected by EPA. This data will enable EPA to better understand commuting habits, to provide support for and recognize BWC Employers, and to monitor and measure the success of BWC. All data collection is voluntary and will be done electronically or by fax except where a participant doesn't have access. No personal information will be collected, and all data will be aggregated for analysis.

An agency may not conduct or sponsor, and a person is not required to respond to, a collection of information unless it displays a currently valid OMB control number. The OMB control numbers for EPA's regulations in 40 CFR are listed in 40 CFR part 9 and are identified on the form and/or instrument, if applicable.

Burden Statement: The annual public reporting and recordkeeping burden for this collection of information is estimated to average 0.5 hours per response. Burden means the total time, effort, or financial resources expended by persons to generate, maintain, retain, or disclose or provide information to or for a Federal agency. This includes the time needed to review instructions; develop, acquire, install, and utilize technology and systems for the purposes of collecting, validating, and verifying information, processing and maintaining information, and disclosing and providing information; adjust the existing ways to comply with any previously applicable instructions and requirements; train personnel to be able to respond to a collection of information; search data sources; complete and review the collection of information; and transmit or otherwise disclose the information.

Respondents/Affected Entities: Work Site contacts of voluntarily participating BWC Employers, BWC employees at Work Sites randomly selected for annual survey, and members of the year's control group.

Estimated Number of Respondents: 52,566.

Frequency of Response: Annually.

Estimated Total Annual Hour Burden: 24,052.

Estimated Total Annual Cost: $1,284,142, includes $1,064 annualized O&M costs.

Changes in the Estimates: This is a new information collection, and, as such, this section does not apply.

Dated: July 9, 2004.

Oscar Morales,

Director, Collection Strategies Division.

[FR Doc. 04–16209 Filed 7–15–04; 8:45 am]

BILLING CODE 6560–50–P

ENVIRONMENTAL PROTECTION AGENCY

[OAR–2003–0053; FRL–7789–4]

Agency Information Collection Activities; Submission to OMB for Review and Approval; Comment Request; Clean Air Interstate Rule

AGENCY: Environmental Protection Agency (EPA).

ACTION: Notice.

SUMMARY: In compliance with the Paperwork Reduction Act (44 U.S.C. 3501 *et seq.*), this document announces that EPA has submitted a proposed Information Collection Request (ICR) (EPA ICR number 2152.01) to the Office of Management and Budget (OMB) for review and approval. This proposed ICR is associated with EPA's proposed Clean Air Interstate Rule (CAIR). The proposed CAIR is articulated in two published notices: a notice of proposed rule (NPR) (69 FR 4566, January 30, 2004) and supplemental notice of proposed rule (SNPR) (69 FR 32684, June 10, 2004). The NPR and SNPR require certain States to submit State implementation plan (SIP) measures to ensure that emissions reductions are achieved as needed to mitigate transport of fine particulate matter (PM2.5) and/or ozone pollution across State boundaries. This ICR describes the nature of the information collection and its estimated burden and cost associated with this proposed rule. In cases where information is already collected by a related program, this ICR takes into account only the additional burden. This applies in instances where States are also subject to requirements of the Consolidated Emissions Reporting Rule (EPA ICR number 0916.10; OMB control number 2060–0088) or where sources and States affected by the Acid Rain Program (EPA ICR number 1633.13; OMB control number 2060–0258) or NO_X SIP Call (EPA ICR number 1857.03; OMB number 2060–0445) requirements. EPA is soliciting comments on specific aspects of the proposed information collection as described below.

DATES: Comments must be submitted on or before September 14, 2004.

ADDRESSES: Submit your comments, identified by Docket ID No. OAR–2003–0053, by one of the following methods:

- Federal eRulemaking Portal: *http://www.regulations.gov.* Follow the on-line instructions for submitting comments.
- Agency Web site: *http://www.epa.gov/edocket.* EDOCKET, EPA's electronic public docket and comment system, is EPA's preferred method for receiving comments. Follow the on-line instructions for submitting comments.
- E-mail: *A-and-R-Docket@epa.gov.*
- Mail: Air Docket, Clean Air Interstate Rule, Environmental Protection Agency, Mailcode: 6102T, 1200 Pennsylvania Ave., NW, Washington, DC 20460.
- Hand Delivery: EPA Docket Center, 1301 Constitution Avenue, NW, Room B108, Washington, DC. Such deliveries are only accepted during the Docket's normal hours of operation, and special arrangements should be made for deliveries of boxed information.

Instructions: (1) To provide comments to EPA, direct your comments to Docket ID No. OAR–2003–0053. The EPA's policy is that all comments received will be included in the public docket without change and may be made available online at *http://www.epa.gov/edocket*, including any personal information provided, unless the comment includes information claimed to be Confidential Business Information (CBI) or other information whose disclosure is restricted by statute. Do not submit information that you consider to be CBI or otherwise protected through EDOCKET, regulations.gov, or e-mail. The EPA EDOCKET and the Federal regulations.gov Web sites are ''anonymous access'' systems, which means EPA will not know your identity or contact information unless you

provide it in the body of your comment. If you send an e-mail comment directly to EPA without going through EDOCKET or regulations.gov, your e-mail address will be automatically captured and included as part of the comment that is placed in the public docket and made available on the Internet. If you submit an electronic comment, EPA recommends that you include your name and other contact information in the body of your comment and with any disk or CD–ROM you submit. If EPA cannot read your comment due to technical difficulties and cannot contact you for clarification, EPA may not be able to consider your comment. Electronic files should avoid the use of special characters, any form of encryption, and be free of any defects or viruses. For additional information about EPA's public docket visit EDOCKET on-line or see the **Federal Register** of May 31, 2002 (67 FR 38102). For additional instructions on submitting comments, go to Unit I of the **SUPPLEMENTARY INFORMATION** section of this document.

Docket: All documents in the docket are listed in the EDOCKET index at *http://www.epa.gov/edocket.* Although listed in the index, some information is not publicly available, i.e., CBI or other information whose disclosure is restricted by statute. Certain other material, such as copyrighted material, is not placed on the Internet and will be publicly available only in hard copy form. Publicly available docket materials are available either electronically in EDOCKET or in hard copy at the EPA Docket Center, EPA West, Room B102, 1301 Constitution Avenue, NW, Washington, DC. The Public Reading Room is open from 8:30 a.m. to 4:30 p.m., Monday through Friday, excluding legal holidays. The telephone number for the Public Reading Room is (202) 566–1744, and the telephone number for the Air Docket is (202) 566–1742.

(2) To provide comments to OMB, mail or hand deliver comments to: Office of Information and Regulatory Affairs, Office of Management and Budget (OMB), Attention: Desk Officer for EPA, 725 17th Street, NW., Washington, DC 20503.

FOR FURTHER INFORMATION CONTACT: For information concerning emissions reporting contact William B. Kuykendal, U.S. Environmental Protection Agency, 109 TW Alexander Dr., Mail Code D–205–01, Research Triangle Park, NC 27711; telephone number: 919–541–5372; fax number: 919–541–0684; e-mail at *www.kuykendal.bill@epa.gov.* For information concerning emission trading information requirements contact Beth A. Murray; U.S. Environmental Protection Agency, Clean Air Markets Division, Mail Code 6204J, 1200 Pennsylvania Ave. NW., Washington, DC 20460; telephone 202–343–9115; fax 202–343–2359; e-mail at *murray.beth@epa.gov.*

SUPPLEMENTARY INFORMATION: The EPA has established a public docket for this ICR under Docket ID No. OAR–2003–0053, that is available for public viewing at the Air and Radiation Docket in the EPA Docket Center (EPA/DC), EPA West, Room B102, 1301 Constitution Ave., NW., Washington, DC. The EPA Docket Center Public Reading Room is open from 8:30 a.m. to 4:30 p.m., Monday through Friday, excluding legal holidays. The telephone number for the Reading Room is (202) 566–1744, and the telephone number for the Air and Radiation Docket is (202) 566–1742. An electronic version of the public docket is available through EPA Dockets (EDOCKET) at *http://www.epa.gov/edocket.* Use EDOCKET to submit or view public comments, to access the index listing of the contents of the public docket, and to access those documents in the public docket that are available electronically. Once in the system, select ''search,'' then key in the docket ID number identified above. In addition, this information is available at the EPA's CAIR Web site, *http://www.epa.gov/interstateairquality.*

Any comments related to this ICR should be submitted to EPA and OMB within 60 days of this notice. EPA's policy is that public comments, whether submitted electronically or in paper, will be made available for public viewing in EDOCKET as EPA receives them and without change, unless the comment contains copyrighted material, Confidential Business Information (CBI), or other information whose public disclosure is restricted by statute. When EPA identifies a comment containing copyrighted material, EPA will provide a reference to that material in the version of the comment that is placed in EDOCKET. The entire printed comment, including the copyrighted material, will be available in the public docket. Although identified as an item in the official docket, information claimed as CBI, or whose disclosure is otherwise restricted by statute, is not included in the official public docket, and will not be available for public viewing in EDOCKET.

Title: Clean Air Interstate Rule.

Abstract: In a January 30, 2004 notice (69 FR 4566–4650), EPA proposed to find that emission of sulfur dioxide (SO_2) and oxides of nitrogen (NO_X) from 28 States and the District of Columbia and emissions of NO_X from 25 States and the District of Columbia, violate provisions of Clean Air Act (CAA) section 110(a)(2)(D) by contributing significantly nonattainment of the annual PM2.5 and the 8-hour ozone national ambient air quality standards (NAAQS).

As a result, EPA proposed to require SIP revisions containing measures to ensure that necessary emissions reductions are achieved. The EPA proposed SIP submittal deadlines and other aspects of the SIP submittals. Further, the January 2004 proposal identified the appropriate amount of NO_X and SO_2 emissions that each of the affected jurisdictions would be required to eliminate. The January 2004 proposal explained that the affected States could choose to control any sources they wish to achieve those reductions and generally discussed the methodologies for determining the appropriate amount of emissions reductions on a State-by-State basis. The January 2004 proposal further explained that the emissions reductions may be achieved most cost effectively by controls on electric generating units (EGUs), and in particular, through region wide cap-and-trade programs for EGUs. The January 2004 proposal indicated the methods for determining the allowable amounts of SO2 and NO_X emissions from EGUs and offered a sketch of the EPA administered model cap-and-trade programs that States may choose to adopt.

On June 10, 2004, EPA published a Supplemental Proposal for the Rule to Reduce Interstate Transport of Fine Particulate Matter and Ozone (69 FR 32684–32772). The supplemental proposal fills certain gaps in the January 2004 proposal and revises it or its supporting information in specific ways.

The purpose of this ICR is to provide the anticipated monitoring, reporting, and recordkeeping burden estimates and associated costs for States, local governments, and sources that are expected to result from the proposed CAIR, as amended by the supplemental proposal.

The recordkeeping and reporting burden to sources resulting from States choosing to participate in a regional cap and trade program is estimated to be approximately $67.9 million annually. This estimate includes the annualized cost of installing and operating appropriate SO_2 and NO_X emissions monitoring equipment to measure and report the total emissions of these pollutants from large EGUs (serving generators greater than 25 megawatt electrical). The burden to State and local

air agencies includes any necessary revisions to SIPs, monitoring certification, and audit responsibilities.

Burden Statement: The ICR estimates the annual State and Local burden for the proposed CAIR to average 5,351 hours per year. Burden means the total time, effort, or financial resources expended by persons to generate, maintain, retain, disclose or provide information to, or for, a Federal agency. This includes the time needed to review instructions; develop, acquire, install, and utilize technology and systems for the purposes of collecting, validating, and verifying information, processing and maintaining information, and disclosing and providing information; adjust the existing ways to comply with any previously applicable instructions and requirements; train personnel to be able to respond to a collection of information; search data sources; complete and review the collection of information; and transmit or otherwise disclose the information.

Respondents/Affected Entities: State and local entities affected by this ICR include State and local air quality agencies. Additionally, States are expected to achieve the reductions required by the proposed rule from large EGUs, so the burden to those entities is estimated in this ICR.

Estimated Number of Respondents: Respondents are expected to include 1,750 businesses and 104 State or local agencies.

Frequency of Response: The frequency of response will vary by task.

Estimated Total Annual Hour Burden: The total annual reporting and recordkeeping hour burden for all respondents is estimated to be approximately 607,978 hours per year.

Estimated Total Annual Cost: Total annual costs of information collection are estimated to be approximately $68.1 million for CAIR. This estimate includes $20.8 million annualized capital or start up costs.

Dated: July 13, 2004.

Jeffrey S. Clark,

Acting Director, Office of Air Quality Planning and Standards.

[FR Doc. 04–16330 Filed 7–15–04; 8:45 am]

BILLING CODE 6560–50–P

ENVIRONMENTAL PROTECTION AGENCY

[ER–FRL–6653–6]

Environmental Impact Statements; Notice of Availability

Responsible Agency: Office of Federal Activities, General Information (202) 564–7167 or *http://www.epa.gov/compliance/nepa/*. Weekly receipt of Environmental Impact Statements Filed July 5, 2004 Through July 9, 2004 Pursuant to 40 CFR 1506.9.

EIS No. 040316, DRAFT EIS, AFS, NM, Invasive Plant Control Project, To Protect the Abundance and Biological Diversity of Desired Native Plant, Carson National Forest and Santa Fe National Forest, Rio Arriba, Colfax, Los Alamos, Mora and San Miguel Counties, NM, Due: August 30, 2004, Contact: Sanford Hurlocker (505) 753–7331.

EIS No. 040317, FINAL EIS, FHW, MD, MD–97, Brookeville Project Improvements and Preservation, South of Gold Mine Road to North of Holliday Drive, Funding and U.S. Army Corps of Engineers Section 10 and 404 Permits Issuance, Montgomery County, MD, Due: August 16, 2004, Contact: Denise W. King (410) 779–7145.

EIS No. 040318, FINAL EIS, AFS, MT, Lower Big Creek Project, To Implement Timber Harvest and Prescribed Burning, Kootenai National Forest Plan, Rexford Ranger District, Lincoln County, MT, Due: August 16, 2004, Contact: Ron Komac (406) 296–2536.

EIS No. 040319, FINAL EIS, FHW, UT, I–15, 31st Street in Ogden to 2700 North in Farr West, Reconstruction, Widening and Interchange Improvements, Funding and U.S. Army COE Section 404 Permit, Weber County, UT, Due: August 16, 2004, Contact: Sandra Garcia (801) 963–0182.

EIS No. 040320, DRAFT EIS, NOA, ME, MA, RI, NH, CT, Atlantic Herring Fishery Management Plan, Minimizing Impacts on Essential Fish Habitat of Any Species, Gulf of Maine—Georges Bank, ME, NH, MA, CT and RI, Due: October 13, 2004, Contact: Peter D. Colosi (978) 281–3332. This document is available on the Internet at: *http://www.nero.noaa.gov/nero/*.

EIS No. 040321, DRAFT EIS, AFS, MT, Gallatin National Forest Noxious and Invasive Weed Control Project, To Prevent and Reduce Loss of Native Plant, Bozeman, Carbon, Madison, Gallatin, Meagher, Park, and Sweet Grass Counties, MT, Due: August 30, 2004, Contact: Susan LaMont (406) 832–6976.

This document is available on the Internet at: *http://www.fs.fed.us/r1/gallatin/index.php?page=projects.weed_control*.

EIS No. 040322, DRAFT EIS, BLM, CA, Clear Creek Resource Management Area Plan Amendment, Hollister Resource Management Plan, Implementing the Decision Made in the 1999 CCMA ROD, San Benito and Fresno Counties, CA, Due: October 15, 2004, Contact: Robert Beehler (831) 630–5000. This document is available on the Internet at: *http//www.ca.blm.gov/hollister*.

EIS No. 040323, DRAFT EIS, COE, CA, Matilija Dam Ecosystem Restoration Feasibility Study, Restoring Anadromous Fish Populations, Matilija Creek, Ventura River, Ventura County Watershed Protection District, Ventura County, CA, Due: August 30, 2004, Contact: Chris Serjak (213) 452–3865.

EIS No. 040324, DRAFT EIS, BIA, WY, Wind River Natural Gas Field Development Project, Construction, Drilling and Production Operation of Natural Gas Wells, Fremont County, WY, Due: August 30, 2004, Contact: Ray A. Nation (307) 332–3718.

EIS No. 040325, FINAL EIS, BLM, WY, Jack Morrow Hills Coordinated Activity Plan, Implementation, Rock Springs, Portion of Sweetwater, Fremont and Subelette Counties, WY, Due: August 16, 2004, Contact: Renee Dana (307) 352–0256.

This document is available on the Internet at: *http://www.wy.blm.gov/jmhcap*.

EIS No. 040326, FINAL EIS, BLM, NV, Tracy to Silver Lake Transmission Line Project, Construction, Operation and Maintenance of a 120kV Transmission Line from Tracy Power Plant to New Substations in the Spanish Spring Valley and Stead Areas, Right-of-Way Application, Washoe County, NV, Due: August 16, 2004, Contact: Terri Knutson (775) 885–6156.

This document is available on the Internet at: *http://www.nv.blm.gov*.

EIS No. 040327, FINAL EIS, AFS, UT, Trout Slope West Timber Project, Harvesting Timber, Ashley National Forest, Vernal Ranger District, Uintah County, UT, Due: August 16, 2004, Contact: Jeff Underhill (435) 781–5174.

Amended Notices

EIS No. 040144, DRAFT EIS, AFS, NV, Martin Basin Rangeland Project, Authorize Continued Livestock Grazing in Eight Allotments: Martin Basin, Indian, West Side Flat Creek, Buffalo, Bradshaw, Buttermilk, Granite Peak and Rebel Creek Cattle and Horse Allotments, Humboldt-Toiyabe National Forest, Santa Rosa Ranger District, Humboldt County, NV, Due: August 16, 2004, Contact:

Steve Williams (775) 623–5025. Ext. 112 Published FR -04–02–04—Review Period Reopened, From 07–01–2004 to 08–16–2004.

Dated: July 13, 2004.

Ken Mittleholtz,

Environmental Protection Agency, Office of Federal Activities.

[FR Doc. 04–16210 Filed 7–15–04; 8:45 am]

BILLING CODE 6560–50–P

ENVIRONMENTAL PROTECTION AGENCY

[ER–FRL–6653–7]

Environmental Impact Statements and Regulations; Availability of EPA Comments

Availability of EPA comments prepared pursuant to the Environmental Review Process (ERP), under Section 309 of the Clean Air Act and Section 102(2)(c) of the National Environmental Policy Act as amended. Requests for copies of EPA comments can be directed to the Office of Federal Activities at (202) 564–7167. An explanation of the ratings assigned to draft environmental impact statements (EISs) was published in FR dated April 2, 2004 (69 FR 17403).

Draft EISs

ERP No. D–AFS–E65067–00 Rating LO, Land Between the Lakes National Recreation Area, Proposes to Revise TVA's 1994 Natural Resources Management Plan, to Develop an Land Management Resource Plan or Area Plan, Gold Pond, Trigg and Lyon Counties, KY and Stewart County, TN.

Summary: While EPA has no objection to the project, EPA did request clarification of forest-wide goals, objectives and standards that could improve water quality. *ERP No. D–COE–E36183–FL Rating LO*, Southern Golden Estates Ecosystem Restoration Project, Comprehensive Everglades Restoration Plan, Implementation, Collier County, FL.

Summary: While EPA had no objections to the proposed project, EPA did suggest that an interagency operations team be formed to focus on operational procedures that determine pumping requirements in relation to canal stages and existing/forecast weather conditions. *ERP No. D–COE–H39012–MO Rating EC2*, Howard Bend Floodplain Area Study, Improvements to Future Land, Future Road and Stormwater Management, U.S. Army COE Section 10 and 404 Permits, Missouri Flood Plain Developments, Cities of Maryland Heights and Chesterfield, St. Louis County, MO.

Summary: EPA expressed concerns related to cumulative impact analysis for flank levees for Fee Fee and Creve Coeur Creeks. *ERP No. D–COE–K39084–AZ Rating EC2*, Va Shly'ay Akimel Salt River Ecosystem Restoration Feasibility Study, Increasing and Improving Native Vegetation, in Portions of the Salt River Pima-Maricopa Indian Community (SRPMIC) and the City of Mesa, Maricopa County, AZ.

Summary: EPA expressed concern and requested additional information regarding environmental effects from the project's recreational facilities, impacts to water quality and local traffic, and cumulative impacts of the project. *ERP No. D–FTA–K59003–CA Rating EC2*, Capitol Expressway Corridor Project, Improve Public Transit Services, Santa Clara Valley Transportation Authority, City of San Jose, Santa Clara County, CA.

Summary: EPA expressed concerns and recommended additional information concerning impacts to air quality, energy resources, transportation, the elimination of alternatives, and the analysis of project facilities/ station options.

ERP No. D–NPS–E65068–00 Rating LO, Vicksburg Campaign Trail (VCT) Feasibility Study, To Examine and Evaluate a Number of Sites, Implementation, Mississippi River, AR, LA, TN and MS.

Summary: EPA has no objection to the preferred alternative. *ERP No. D–NPS–J61105–CO Rating EC2*, Colorado National Monument General Management Plan, Implementation, Mesa County, CO.

Summary: EPA has concerns about potential impacts to riparian areas, soil and water resources, and wildlife.

Final EISs

ERP No. F–AFS–L65421–WA, 49 Degrees North Mountain Resort Revised Master Development Plan, Implementation, Colville National Forest, Newport Ranger District, Stevens County, WA.

Summary: No formal comment letter was sent to the preparing agency.

ERP No. F–FRC–G02012–TX, Freeport Liquefied Natural Gas (LNG) Project, To Deliver Imported Liquefied Natural Gas to Shippers, Authorization of Site, Construction and Operation, Stratton Ridge Meter Station 2007, City of Freeport, Brazoria County, TX.

Summary: While EPA had no objection to the proposed action, EPA requested that the mitigation measures be made part of the Record of Decision.

ERP No. F–IBR–K64024–CA, Lower Santa Ynez River Fish Management Plan and Cachuma Project, Biological Opinion for Southern Steelhead Trout and Endangered Southern Steelhead Habitat Conditions Improvements, Santa Barbara County, CA.

Summary: EPA supports the restoration of fisheries habitat and therefore has no objection to this project as proposed.

ERP No. F–SFW–K39083–CA, South Bay Salt Ponds Initial Stewardship Plan, To Maintain and Enhance the Biological and Physical Conditions, South San Francisco Bay, CA.

Summary: The final EIS is responsive to most issues raised by EPA on the draft EIS. EPA recommends that the Record of Decision include a short explanation to clarify the elimination of several alternatives based on cost.

ERP No. F–SFW–K70013–CA, Multiple Habitat Conservation Program for Threatened and Endangered Species Due to the Urban Growth within the Planning Area, Adoption and Incidental Take Permits Issuance, San Diego County, CA.

Summary: EPA has no objections to the action as proposed.

ERP No. FS–AFS–G65062–NM, Agua/Caballos Timber Sale, Timber Harvest and Existing Vegetation Management, Implementation, Carson National Forest, EL Rito Ranger District, Taos County, NM.

Summary: No formal comment letter was sent to the preparing agency.

Dated: July 13, 2004.

Ken Mittelholtz,

Environmental Protection Specialist, Office of Federal Activities.

[FR Doc. 04–16211 Filed 7–15–04; 8:45 am]

BILLING CODE 6560–50–P

ENVIRONMENTAL PROTECTION AGENCY

[OPP–2004–0171; FRL–7361–8]

Pesticide Environmental Stewardship Program (PESP) Regional Grants; Notice of Funds Availability

AGENCY: Environmental Protection Agency (EPA).

ACTION: Notice.

SUMMARY: EPA's Office of Pesticide Programs (OPP), in coordination with the EPA Regional Offices, is soliciting proposals for the Pesticide Environmental Stewardship Program (PESP) from eligible applicants who include the 50 States, District of Columbia, U.S. Virgin Islands, Commonwealth of Puerto Rico, any territory or possession of the United States, any agency or instrumentality of a State including State universities, and

all federally recognized Native American Tribes. Under this program, cooperative agreement awards will provide financial assistance to eligible applicants to carry out projects that reduce the risks associated with pesticide use in agricultural and non-agricultural settings. The total amount of funding available for award in fiscal year 2004 is expected to be approximately $500,000 with a maximum funding level of $40,000 per project.

DATES: Applications must be received by your EPA Regional Office on or before August 30, 2004.

ADDRESSES: Proposals must be mailed to your EPA Regional Office. Please follow the detailed instructions provided in Unit IV.H. of the **SUPPLEMENTARY INFORMATION**.

FOR FURTHER INFORMATION CONTACT: Your EPA Regional PESP Coordinator listed in Unit IV.H. of the **SUPPLEMENTARY INFORMATION**.

SUPPLEMENTARY INFORMATION:

I. Overview Information

The following listing provides certain key information concerning the proposal opportunity.

- *Federal agency name*: Environmental Protection Agency (EPA).
- *Funding opportunity title*: Pesticide Environmental Stewardship Program (PESP) Regional Grants; Notice of Funds Availability.
- *Announcement type*: The initial announcement of a funding opportunity.
- *Catalog of Federal Domestic Assistance (CFDA) number(s)*: 66.714.
- *Dates*: Applications must be received by EPA on or before August 30, 2004.

II. General Information

A. Does this Action Apply to Me?

This action is directed to the public in general but will be of particular interest to eligible applicants which include the 50 States, District of Columbia, U.S. Virgin Islands, Commonwealth of Puerto Rico, any territory or possession of the United States, any agency or instrumentality of a State including State universities, and all federally recognized Native American Tribes. If you have any questions regarding the applicability of this action to a particular entity, consult your EPA Regional PESP Coordinator listed under Unit IV.H.

B. How Can I Get Additional Information, Including Copies of this Document and Other Related Documents?

1. *Docket*. EPA has established an official public docket for this action under docket identification (ID) number OPP–2004–0171. Although a part of the official docket, the public docket does not include Confidential Business Information (CBI) or other information whose disclosure is restricted by statute. The official public docket is the collection of materials that is available for public viewing at the Public Information and Records Integrity Branch (PIRIB), Rm. 119, Crystal Mall #2, 1921 Jefferson Davis Hwy., Arlington, VA. This docket facility is open from 8:30 a.m. to 4 p.m., Monday through Friday, excluding legal holidays. The docket telephone number is (703) 305–5805.

2. *Electronic access*. You may access this **Federal Register** document electronically through the EPA Internet under the ''**Federal Register**'' listings at*http://www.epa.gov/fedrgstr/*. Additional information is available on EPA's PESP Website at*http://www.epa.gov/oppbppd1/PESP/regional_grants.htm*.

An electronic version of the public docket is available through EPA's electronic public docket and comment system, EPA Dockets. You may use EPA Dockets at *http://www.epa.gov/edocket/*, to access the index listing of the contents of the official public docket, and to access those documents in the public docket that are available electronically. Although not all docket materials may be available electronically, you may still access any of the publicly available docket materials through the docket facility identified in Unit II.B.1. Once in the system, select ''search,'' then key in the appropriate docket ID number.

3. *By mail or in person*. Contact your EPA Regional PESP Coordinator listed under Unit IV.H.

III. Introduction

The goal of the Pesticide Environmental Stewardship Program (PESP) is to reduce the risks associated with pesticide use in agricultural and non-agricultural settings in the United States. Each year since 1996, EPA's Office of Pesticide Programs, in coordination with the EPA Regional Offices, has published similar solicitations, awarding approximately $500,000 annually to eligible State and Tribal entities for projects supporting pesticide risk reduction. This **Federal Register** notice provides qualification and application requirements to parties who may be interested in submitting proposals for fiscal year 2004 monies. The total amount available for award during this funding cycle is expected to be approximately $500,000. Maximum award amount per proposal is set at $40,000. Indirect cost rates will not increase the $40,000 maximum funding amount.

A list of projects funded since fiscal year 1998 and their proposals may be obtained at*http://www.epa.gov/oppbppd1/PESP/regional_grants.htm* or from your Regional PESP Coordinator.

IV. Purpose and Objectives

A. Purpose and Scope

Cooperative agreements awarded under this program are intended to provide financial assistance to eligible States and Tribal governments for projects that address pesticide pollution prevention, integrated pest management (IPM), IPM in schools, children's health issues related to pesticides, and those research methods for documenting IPM adoption or the reduction of risks associated with changes in pesticide use. Other projects will be considered as they complement these goals through public education, training, monitoring, demonstrations, and other activities. Emphasis will be placed on those projects with defined outcomes that can quantitatively document project impacts. Although the proposal may request funding for activities that will further long-term objectives, this program provides one time funding, and the maximum period of performance for funded activities is expected to be not more than 24 months.

This program is included in the Catalog of Federal Domestic Assistance at *http://www.cfda.gov/public/whole.pdf* under number 66.714.

B. Goals and Objectives

EPA intends that recipients will use funding provided under this Regional Pesticide Environmental Stewardship Program Grants program to help address specific pesticide risk reduction concerns. The Agency will consider funding a broad range of projects that reduce pesticide risk to human health and the environment. For a partial listing of eligible types of projects, see Unit IV.E.

C. Eligibility

1. *Applicants*. The 50 States, District of Columbia, U.S. Virgin Islands, Commonwealth of Puerto Rico, any territory or possession of the United States, any agency or instrumentality of a State including State universities, and

all federally recognized Native American Tribes that are eligible to receive federal funding may submit a project proposal. Local governments, private universities, private nonprofit entities, private businesses, and individuals are not eligible. The organizations excluded from applying directly are encouraged to work with eligible applicants in developing proposals that include them as participants in the projects.

To be eligible for consideration, applicants must meet all of the following criteria. Failure to meet the following criteria will result in the automatic disqualification of the proposal for consideration for funding:

- The applicant must be eligible to receive funding under this announcement.
- The proposal must meet all format and content requirements contained in this notice.
- The proposal must comply with the directions for submittal contained in this notice.

2. *Qualifications*. Qualified applicants are limited to the 50 States, District of Columbia, U.S. Virgin Islands, Commonwealth of Puerto Rico, any territory or possession of the United States, any agency or instrumentality of a State including State universities, and all federally recognized Native American Tribes as defined in Unit II.A. Additional application requirements are listed under Unit IV.G.

D. Authority

EPA expects to award grants and cooperative agreements under the authority provided in FIFRA section 20 which authorizes the Agency to issue grants or cooperative agreements for research, public education, training, monitoring, demonstration and studies.

The award and administration of these grants will be governed by the Uniform Administrative Requirements for Grants and Cooperative Agreements to States, Tribes, and local governments set forth at 40 CFR part 31. Grants awarded pursuant to this solicitation are program grants subject to the regulations for ''Environmental Program Grants'' set forth at 40 CFR part 35, subpart B. In addition, the provision in 40 CFR part 32, governing government-wide debarment and suspension, and the provisions in 40 CFR part 40 regarding restrictions on lobbying, apply.

All costs incurred under this program must be allowable under the applicable OMB Cost Circular A–87. Copies of this circular can be found at*http://www.whitehouse.gov/omb/circulars/*. In accordance with the EPA policy and the OMB circular, any recipient of funding must agree not to use assistance funds for fund-raising, or political activities such as lobbying members of Congress or lobbying for other federal grants, cooperative agreements, or contracts. See 40 CFR part 40.

E. Activities that May be Funded

EPA specifically seeks to build IPM capacities or to evaluate the economic feasibility of new IPM approaches at the local level (i.e., innovative approaches and methodologies that use application or other strategies to reduce the risks associated with pesticide use). Following are three examples of possible projects.

- Researching the effectiveness of multimedia communication activities for, including but not limited to promoting local IPM activities, providing technical assistance to pesticide users, collecting and analyzing data to target outreach and technical assistance opportunities, developing measures to determine and document progress in pollution prevention, and identifying regulatory and non-regulatory barriers or incentives to pollution prevention.
- Investigating methods for establishing IPM as an environmental management priority, establishing prevention goals, developing strategies to meet those goals, and integrating the ethic within both governmental and non-governmental institutions of the State or region.
- Initiating projects that test and support innovative techniques for reducing pesticide risk including reduced use and improved application techniques to reduce worker and environmental exposure.

F. Award and Distribution of Funds

1. *Available funds*. Funding for each award recipient will be in the form of a cooperative agreement for $40,000 or less, under FIFRA section 20. The total available for award is expected to be approximately $500,000.

Should additional funding become available for award, the Agency may make additional monies available, based on this solicitation and in accordance with the final selection process, without further notice of competition. The Agency also reserves the right to decrease available funding for this program, or to make no awards based on this solicitation. All costs charged to these awards must be allowable under the applicable OMB Cost Circular, A–87 which may be found at *http://www.whitehouse.gov/omb/circulars/*.

2. *Evaluation process and criteria*. Proposals will be reviewed and approved for validity and completeness by EPA Regional Office personnel. If the Region determines that an application is incomplete, the proposal will not be considered further. Each Region will convene a panel consisting of regional staff to evaluate all complete proposal packages. The highest ranked proposal in each Region will be funded.

Proposals ranked second highest in each Region will be placed into a national pool. A panel, composed of three Regional Offices and one Office of Pesticide Programs personnel will re-evaluate these proposals. Funding decisions for these proposals will be based on their ranking and available funds. Final selections will be made by close of business 21 days after the closing date for receipt of proposals.

Applicants must submit information, as specified in this solicitation, to address award criteria. Applicants must also provide information specified in this solicitation that will assist EPA in assessing their capacity to do the work outlined in the project proposal. The proposed work plan and budget should reflect activities that can realistically be completed during the period of performance of the cooperative agreement. Criteria that will be used to review, rank, and award funding are found below.

a. *General background information request*. EPA Regional Offices are responsible for the receipt, screening, and selection of proposals. A generic proposal format will be available on EPA's PESP Website on or before July 23, 2004, at*http://www.epa.gov/oppbppd1/PESP/regional_grants.htm*.

b. *Selection criteria*. All proposal reviews will be based on the following evaluation criteria and weights. (Total: 100 points)

- *Consistency with goals of PESP*. Is the project consistent with the risk reduction goals of PESP, pesticide pollution prevention or IPM, or children's health issues related to pesticides? Does the project implement reduced risk control techniques? Or, does the project develop strategies that will lead to implementation of such projects, or research methods for documenting the trends toward the adoption of IPM or the reduction of risk associated with pesticide use? (Weight: 10 points)
- *Relevance*. Does the project identify a critical issue in the Region or nation? Does the project address a significant local or widespread environmental concern? Does the project clearly target and define the environmental problem? For EPA Region 4 only, preference will be given to proposals that directly, measurably, and cooperatively provide service and

direct impact to a Tribe within the Region. (Weight: 15 points)

- *Project design*. Does the project specify realistic goals and objectives that deal with the identified environmental problem? Does the project demonstrate potential for long-term benefits? Can the project be accomplished within the designated24–month time frame? Does the project apply holistic problem-solving, particularly biological systems, and address multiple components of the system in focus? For example, if an agricultural project, does it consider soil, water, air, plant, animal and human resources? If non-agricultural, does it consider sanitation, exclusion, multiple vectors, etc.? Does the project build upon or consider lessons learned from existing efforts, or leverage other significant activities? (Weight: 20 points)
- *Qualifications*. Does the applicant demonstrate experience in the field of the proposed activity? Does the applicant have the properly trained staff, facilities or infrastructure in place to conduct the project? (Weight: 5 points)
- *Measurement*. Is the project designed in such a way that it is maximized to measure and document the results quantitatively and qualitatively? Are the measures relevant to EPA's goals and objectives? Does the applicant identify the method that will be used to measure and document the project's results quantitatively and qualitatively? Will the project assess or suggest a new means of measuring progress in reducing pesticide risks and result in information that will be valuable to other efforts? (Weight: 20 points)
- *Outreach and extension*. Does the project include participation of partner organizations? Does the project include the involvement of local stakeholders, farmer-to-farmer education or farmer-to-scientist interaction to achieve technology transfer? (Weight: 15 points)
- *Transferability*. Is the project likely to be replicated in other areas by other organizations to benefit other communities, or is the product likely to have broad utility to a widespread audience? Does the project address the sociological or economic forces that support adoption, or those impediments that limit adoption, of environmentally sensitive system? (Weight: 15 points)

3. *Dispute resolution process*. The procedures for dispute resolution at 40 CFR 30.63 and 40 CFR 31.70 apply.

G. Application Requirements

Content requirements. Proposals must be typewritten, double spaced in 12 point or larger print using 8.5 x 11 inch paper with minimum 1 inch horizontal and vertical margins. Pages must be numbered, in order, starting with the cover page and continuing through the appendices. One original and one electronic copy (e-mail or disk) are required.

The electronic copy must be submitted on a 3.5'' disk or CD in Microsoft Word or Corel WordPerfect for Windows. The electronic copy must be consolidated into a single file. Please check your electronic submission to ensure that it does not contain any computer viruses. To be considered, both the paper and electronic copy must arrive by the due date. In order to be considered for funding, proposals must be submitted to the EPA Regional PESP Coordinator indicated in Unit IV.H. of this solicitation.

A generic proposal format is available from the EPA Internet at*http://www.epa.gov/oppbppd1/PESP/regional_grants.htm*. Your application package must include the following information:

Cover Page (page 1). The cover page should list the following information: EPA docket ID number OPP–2004–0171; project title; project coordinator; organization; address; telephone number; fax number; e-mail address; and project duration. A budget table should also be included that lists first year funding, second year funding, and total funding being requested and any matching funds that will be provided.

Executive Summary (page 2). The Executive Summary shall be a stand-alone document, not to exceed one page. It should quickly explain the high points of the proposed project and why it is important. It should also explain what is proposed and what you expect to accomplish regarding measuring or movement toward achieving project goals. This summary should identify the measurable environmental results you expect including potential human health and ecological benefits.

Table of Contents (page 3). List the different sections of your proposal and the page number on which each section begins.

Proposal narrative (page 4 up to page 14). Includes sections I–VI as identified below. The narrative should not exceed 10 pages.

Part I—Project title. Descriptive project title.

Part II—Project description and objectives. What is this project? Please clearly state its objectives and goals. (In most cases, each objective can be stated in a single sentence, perhaps followed by a brief discussion of timing, methods, expected outcomes, including impacts on human and environmental health, pesticide risk reduction, etc.). Does the project have a definite end point or might it give rise to future activities? If the latter, what future endeavors might it generate? What will you consider to be indicators/measures of success? How will this project benefit your State or Tribe?

Part III—Justification. For each objective listed in Part II above, discuss the potential outcome in terms of environmental, human health, pesticide risk and/or use reduction or pollution prevention. If appropriate, the target pest(s) and crop(s) should be explicitly stated. This section should be numbered with a justification corresponding to each objective.

Part IV—Literature review. Briefly describe relevant information currently available. This should also include information on projects currently in progress that are relevant to or provide the basis for either the experimental design or the validation of a new approach to pest management.

Part V—Approach and methods. Describe in detail how you will go about implementing the project and how your planned approach will support project success. Identify any personnel and/or contractors that you expect to involve in this project. Describe their roles and qualifications, including relevant training or experience.

Part VI—Impact assessment. How will you evaluate the success of the project in terms of measurable environmental results? How and with what measures will human health and the environment be better protected as a result of this project?

Part VII—Proposal appendices. Continue page numbering. These appendices must be included in the grant proposal. The appendices may be single spaced. Additional appendices are not permitted.

Appendix A—Literature cited. List cited key literature references alphabetically by author.

Appendix B—Timetable. A timetable that includes what will be accomplished under each of the objectives during the project and when completion of each objective is anticipated.

Appendix C—Major participants. List all farmers/ranchers, farm/ranch organizations, researchers, educators, conservationists and others having a major role in the proposal. Provide name, organizational affiliation or occupation (such as farmer) and a description of the role each will play in the project. A brief resume (not to exceed two pages) should be submitted for each major researcher or other educator.

Appendix D—Project budget. Provide a budget matrix that outlines costs for personnel, fringe benefits, travel, equipment, supplies, contractual, indirect cost rate, and any other costs associated with the proposed project. Identify how the requested funds are to be used and also identify how other funding will be used in this project.

Confidential business information. Applicants must clearly mark information considered confidential business information. EPA will make a final confidentiality determination for information the applicant claims as confidential business information, in accordance with Agency regulations at 40 CFR part 2, subpart B.

H. Application Procedures

Submission instructions. The applicant may contact the appropriate EPA Regional PESP Coordinator, as listed below, to obtain clarification and guidance. One original signed package must be sent by mail. An electronic copy of the proposal (on a CD or 3.5'' diskette) is also required and must accompany the mailed package. The proposal must be received by your EPA Region no later than 5 p.m. August 30, 2004. Incomplete or late proposals will be disqualified for funding consideration. Contact the appropriate EPA Regional PESP Coordinator if you need assistance or have questions regarding the creation or submission of a project proposal. To ensure proper receipt by EPA, it is imperative that you identify docket ID number OPP–2004–0171 in the subject line on the first page of your proposal. EPA Regional PESP Coordinators are as follows:

Region I: (Connecticut, Maine, Massachusetts, New Hampshire, Rhode Island, Vermont), Andrea Szylvian, 1 Congress St., Suite 1100, (CPT), Boston, MA 02114–2023; telephone: (617) 918–1198; fax: (617) 918–2064; e-mail: *szylvian.andrea@epa.gov*.

Region II: (New Jersey, New York, Puerto Rico, Virgin Islands), Tara Masters, Raritan Depot, 2890 Woodbridge Ave., (MS-500), Edison, NJ 08837–3679; telephone: (732) 906–6183; e-mail:*masters.tara@epa.gov*.

Region III: (Delaware, Maryland, Pennsylvania, Virginia, West Virginia, District of Columbia), Fatima El-Abdaoui, 1650 Arch St., (3WC32), Philadelphia, PA 19103–2029; telephone: (215) 814–2129; fax: (215) 814–3114; e-mail:*el-abdaoui.fatima@epa.gov*.

Region IV: (Alabama, Florida, Georgia, Kentucky, Mississippi, North Carolina, South Carolina, Tennessee), Troy Pierce, 61 Forsyth St., SW., Atlanta, GA 30303–8960; telephone: (404) 562–9016; e-mail:*pierce.troy@epa.gov*.

Region V: (Illinois, Indiana, Michigan, Minnesota, Ohio, Wisconsin), Heather McDonald, 77 W. Jackson Blvd., (DT-8J), Chicago, IL 60604–3507; telephone: (312) 886–3572; e-mail:*mcdonald.heather@epa.gov*.

Region VI: (Arkansas, Louisiana, New Mexico, Oklahoma, Texas), Jerry Collins, 1445 Ross Ave., Suite 1200, (6PD-P), Dallas, TX 75202–2733; telephone: (214) 665–7562; fax: (214) 665–7263; e-mail:*collins.jerry@epa.gov*.

Region VII: (Iowa, Kansas, Missouri, Nebraska), Brad Horchem, 901 N. 5th St., (WWPDPEST), Kansas City, KS 66101; telephone: (913) 551–7137; fax: (913) 551–9137; e-mail: *horchem.brad@epa.gov*.

Region VIII: (Colorado, Montana, North Dakota, South Dakota, Utah, Wyoming), Peg Perreault, 999 18th St., Suite 300, (8P-P3T), Denver, CO 80202–2466; telephone: (303) 312–6286; fax: (303) 312–6064; e-mail: *perreault.peg@epa.gov*.

Region IX: (Arizona, California, Hawaii, Nevada, American Samoa, Guam), Paul Feder, 75 Hawthorne St., (CMD-1), San Francisco, CA 94105; telephone: (415) 947–4160; fax: (415) 947–3583; e-mail:*feder.paul@epa.gov*.

Region X: (Alaska, Idaho, Oregon, Washington), Sandy Halstead, 24106 North Bunn Road, Prosser, WA 99350; telephone: (509) 786–9225; e-mail:*halstead.sandra@epa.gov*.

V. Post Selection Activity

Selected applicants must formally apply for funds through the appropriate EPA Regional Office. In addition, selected applicants must negotiate a final work plan, including reporting requirements, with the designated EPA Regional Project Officer. For more general information on post award requirements and the evaluation of grantee performance, see 40 CFR part 31.

VI. Intergovernmental Review

Applicants must comply with the Intergovernmental Review Process and/or the consultation provisions of section 204, of the Demonstration Cities and Metropolitan Development Act, if applicable, which are contained in 40 CFR part 29. All State applicants should consult with their EPA Regional Office or official designated as the single point of contact in his or her State for more information on the process the State requires when applying for assistance, if the State has selected the program for review. If you do not know who your Single Point of Contact is, please call the EPA Headquarters Grant Policy Information and Training Branch at (202) 564–5325 or refer to the State Single Point of Contact web site at*http://www.whitehouse.gov/omb/grants/spoc.html*. Federally recognized Tribal governments are not required to comply with this procedure.

VII. Submission to Congress and the Comptroller General

Grant solicitations such as this are considered rules for the purpose for the Congressional Review Act (CRA). The CRA, 4 U.S.C. 801 *et seq.*, as added by the Small Business Regulatory Enforcement Fairness Act of 1996 (SBREFA), generally provides that before a rule may take effect, the agency promulgating the rule must submit a rule report, which includes a copy of the rule, to each House of the Congress and to the Comptroller General of the United States. EPA will submit a report containing this rule and other required information to the U.S. Senate, the U.S. House of Representatives, and the Comptroller General of the United States prior to publication of the rule in the **Federal Register**. This rule is not a ''major rule'' as defined by 5 U.S.C. 804(2).

List of Subjects

Environmental protection, Pesticides, Risk reduction.

Dated: July 2, 2004.

Susan B. Hazen,

Acting Assistant Administrator, Office of Prevention, Pesticides and Toxic Substances.

[FR Doc. 04–16212 Filed 7–15–04; 8:45 am]

BILLING CODE 6560–50–S

ENVIRONMENTAL PROTECTION AGENCY

[Docket No. OEI–2004–0002; FRL–7789–1]

Forum on Public Access to Federal Rulemaking Through the Internet; Announcement of Public Meetings and Request for Comment

AGENCY: Environmental Protection Agency (EPA).

ACTION: Notice.

SUMMARY: The eRulemaking Initiative, a federal government-wide effort, will hold a series of public meetings and an online dialogue to obtain public input on its major projects.

The Initiative will use information technology to expand public understanding and involvement in the rulemaking process by providing an easy and consistent way for the public to search, view, and comment on proposed federal regulations online. It is

comprised of three major parts. In January 2003, an inter-agency team launched *http://www.regulations.gov*, the first component of the Initiative. This Web site allows the public to search, view, and download all rulemaking documents published in the **Federal Register**. It also allows the public to submit comments on proposed regulations currently open for comment.

The second part of the Initiative is the development of a full-featured electronic docket management system that will provide the public with online access to the broad set of documents routinely included in regulatory and non-regulatory dockets (*e.g.*, **Federal Register** notices; technical, scientific, and legal analyses; and public comments). It will continue to provide the public with the same capabilities as Regulations.gov and will ultimately replace existing electronic and paper-based docket systems. The federal docket system will include additional features, such as full-text and Boolean search capabilities, e-mail notification, data export, and reporting and tracking functions.

The last part of the eRulemaking Initiative is the development of an online workspace containing a variety of tools and templates to assist in the development, review, and publication of federal regulations and the analysis of public comments. Such tools will be available to federal regulation writers and the public and may include databases, collaboration applications, and content categorization software.

The Environmental Protection Agency, as managing partner of the eRulemaking Initiative, will convene a series of public meetings to solicit feedback on the usability and features of the Regulations.gov Web site, the planned government-wide electronic federal docket management system, and the online rulewriter toolbox. Comments received will be considered during the development and/or enhancements of these systems. In addition to these public meetings, Harvard University's John F. Kennedy School of Government, in partnership with the eRulemaking Program Office, will host an online national dialogue to solicit additional public input.

Individuals planning to attend the public meetings or participate in the online dialogue should contact the individual listed under **FOR FURTHER INFORMATION CONTACT** for the location of the meeting. Please register no later than one week before the event.

DATES: Public meetings are scheduled to be held on the following dates:

1. August 2, 2004; 9:30 a.m. to 12:30 p.m., San Francisco, CA.
2. August 3, 2004; 9:30 a.m. to 12:30 p.m., Chicago, IL.
3. August 9, 2004; 9:30 a.m. to 12:30 pm., Cambridge, MA.
4. August 9, 2004; 12:00 p.m. to 6 p.m., Online Dialogue.
5. August 12, 2004; 9:30 a.m. to 12:30 p.m., Washington, DC.

Should a meeting be rescheduled, registrants will be notified via e-mail.

Comments must be received on or before August 16, 2004.

ADDRESSES: Submit your comments, identified by Docket ID No. OEI–2004–0002, by one of the following methods:

- *Federal eRulemaking Portal: http://www.regulations.gov.* Follow the on-line instructions for submitting comments.
- *Agency Web site: http://www.epa.gov/edocket.* EDOCKET, EPA's electronic public docket and comment system, is EPA's preferred method for receiving comments. Follow the on-line instructions for submitting comments.
- *Mail:* OEI Docket, Environmental Protection Agency, Mailcode: 2822T, 1200 Pennsylvania Ave., NW., Washington, DC 20460.
- *Hand Delivery:* OEI Docket, EPA/DC, EPA West, Room B102, 1301 Constitution Ave., NW., Washington, DC. Such deliveries are only accepted during the Docket's normal hours of operation (8:30 a.m. to 4:30 p.m., Monday through Friday, excluding legal holidays), and special arrangements should be made for deliveries of boxed information.

Instructions: Direct your comments to Docket ID No. OEI–2004–0002. EPA's policy is that all comments received during the open comment period will be included in the public docket without change and may be made available online at: *http://www.epa.gov/edocket*, including any personal information provided, unless the comment includes information claimed to be Confidential Business Information (CBI) or other information whose disclosure is restricted by statute. Do not submit information that you consider to be CBI or otherwise protected through EDOCKET or Regulations.gov.

The EPA EDOCKET and the federal Regulations.gov Web sites are ''anonymous access'' systems, which means EPA will not know your identity or contact information unless you provide it in the body of your comment. If you submit an electronic comment, EPA recommends that you include your name and other contact information in the body of your comment and with any disk or CD–ROM you submit. If EPA cannot read your comment due to technical difficulties and cannot contact you for clarification, EPA may not be able to consider your comment. Electronic files should avoid the use of special characters, any form of encryption, and be free of any defects or viruses.

Docket: All documents in the docket are listed in the EDOCKET index at: *http://www.epa.gov/edocket.* Although listed in the index, some information is not publicly available, *i.e.*, CBI or other information whose disclosure is restricted. Certain other material, such as copyrighted material, is not placed on the Internet and will be publicly available only in hard copy form. Publicly available docket materials are available either electronically in EDOCKET or in hard copy at the OEI Docket, EPA/DC, EPA West, Room B102, 1301 Constitution Ave., NW., Washington, DC. The Public Reading Room is open from 8:30 a.m. to 4:30 p.m., Monday through Friday, excluding legal holidays. The telephone number for the Public Reading Room is (202) 566–1744, and the telephone number for the OEI Docket is (202) 566–1752.

FOR FURTHER INFORMATION CONTACT: Kristin Tensuan, eRulemaking Program Branch, Collection Strategies Division (Mail Code 2822V), Office of Environmental Information (OEI), Environmental Protection Agency, 1200 Pennsylvania Ave., NW., Washington, DC 20460; telephone number: (202) 632–0338; fax number: (202) 632–0349; e-mail address: *tensuan.kristin@epa.gov.*

SUPPLEMENTARY INFORMATION:

I. General Information

A. Background

The eRulemaking Initiative is an E-Government Initiative authorized by Section 206 of the E-Government Act of 2002. The Initiative's goals include:

- Expand public understanding of the rulemaking process by providing an easy and consistent way for public to search, view, and comment on federal rules.
- Improve the quality of federal rulemaking decisions and transparency of the rulemaking process.
- Increase the amount, breadth, and ease of citizen and intergovernmental access and participation by using the Internet to enhance public access to information on federal rulemaking.

The eRulemaking Initiative consists of three modules:

Module 1—Regulations.gov. Launched in January 2003, this Web site provides one-stop, online access to every open rule published by more than 160 different federal agencies. The Web site allows the public to view and download **Federal Register** notices of every federal rule currently open for

comment as well as allow the public to submit comments to the appropriate federal agency.

Module 2—Federal Docket Management System. This system, currently under development, will build upon Regulations.gov to establish a full-featured docket management system. It will serve as a central repository for federal rulemaking dockets, which are comprised of **Federal Register** notices, supporting materials, and public comments. The docket management system also will be designed to include non-rulemaking documents, such as Information Collection Requests that agencies can post online for public comment.

Module 3—Online Rulewriter Toolbox. The Initiative also will explore deploying information technology tools to assist in the development, review, and publication of federal regulations and the analysis of public comments. Tools will be available to federal regulation writers and the public. Such tools may include templates, collaboration applications, databases and content categorization software.

The Environmental Protection Agency leads an inter-agency team that manages the Initiative. Other participating federal agencies include: Department of Agriculture, Department of Commerce, Department of Defense, Department of Energy, Department of Health and Human Services, Department of Homeland Security, Department of Housing and Urban Development, Department of Interior, Department of Justice, Department of Labor, Department of Transportation, Department of Treasury, Equal Employment Opportunity Commission, Federal Communications Commission, National Archives and Records Administration, General Services Administration, the Government Printing Office, and the Small Business Administration.

B. Topics of Discussion

The eRulemaking Program Office is seeking public feedback on the usability and features of the Regulations.gov Web site, the planned government-wide electronic federal docket management system, and the rulewriter's toolbox. The following topics will be discussed at the meetings:

- Web site designs that maximize ease-of-use and public utilization,
- Features that users consider most important and would frequently use,
- Additional capabilities that users can apply, and
- Other considerations regarding the eRulemaking Initiative.

We welcome comments from stakeholders interested in electronic rulemaking including, but not limited to, advocacy groups, trade associations, labor unions, regulated industries, small businesses, state and local governments, and the academic community.

II. Additional Information

Additional information about the eRulemaking Initiative is available online at: *http://www.regulations.gov.* You may also contact the person listed under the **FOR FURTHER INFORMATION CONTACT** section of this notice. Help in understanding the Federal rulemaking process and terminology is available from the **Federal Register** at: *http://www.gpoaccess.gov/fr/index.html.*

Dated: July 13, 2004.

Mark A. Luttner,

Director of Information Collection, Office of Environmental Information.

[FR Doc. 04–16328 Filed 7–15–04; 8:45 am]

BILLING CODE 6560–50–P

FEDERAL COMMUNICATIONS COMMISSION

[Report No. AUC–04–37–K; DA 04–1699]

Auction of FM Broadcast Construction Permits Scheduled for November 3, 2004; Notice and Filing Requirements, Minimum Opening Bids, Upfront Payments and Other Auction Procedures

AGENCY: Federal Communications Commission.

ACTION: Notice.

SUMMARY: This document announces the procedures, and minimum opening bids for the upcoming auction of certain FM Broadcast construction permits. This document is intended to familiarize prospective bidders with the procedures and minimum opening bids for this auction.

DATES: Auction No. 37 is scheduled for November 3, 2004.

FOR FURTHER INFORMATION CONTACT: Auctions and Spectrum Access Division, WTB: For legal questions: Kenneth Burnley at (202) 418–0660, for general auction questions: Jeff Crooks at (202) 418–0660 or Lisa Stover at (717) 338–2888. Media Contact: Lauren Patrich at (202) 418–7944.

SUPPLEMENTARY INFORMATION: This is a summary of the *Auction No. 37 Procedures Public Notice* released on June 10, 2004. The complete text of the *Auction No. 37 Procedures Public Notice,* including attachments, is available for public inspection and copying during regular business hours at the FCC Reference Information Center, Portals II, 445 12th Street, SW., Room CY–A257, Washington, DC, 20554. The *Auction No. 37 Procedures Public Notice* may also be purchased from the Commission's duplicating contractor, Best Copy and Printing, Inc. (''BCPI''), Portals II, 445 12th Street, SW., Room CY-B402, Washington, DC, 20554, telephone 202–488–5300, facsimile 202–488–5563, or you may contact BCPI at their Web site: *http://www.BCPIWEB.com.* This document is also available on the Internet at the Commission's Web site: *http://wireless.fcc.gov/auctions/37/.*

I. General Information

A. Introduction

1. The *Auction No. 37 Procedures Public Notice,* announces the procedures and minimum opening bids for the upcoming auction of certain FM Broadcast construction permits scheduled for November 3, 2004 (Auction No. 37). On April 15, 2004, in accordance with the Balanced Budget Act of 1997, the Media Bureau (''MB'') and the Wireless Telecommunications Bureau (''WTB'') (collectively the ''Bureaus'') released a public notice seeking comment on previously announced procedures to be used in Auction No. 37. The Bureaus received eight comments and no reply comments in response to the *2004 Auction No. 37 Revised Comment Public Notice,* 69 FR 26103, May 11, 2004

i. Background of Proceeding

2. As described in detail in the *2004 Auction No. 37 Revised Comment Public Notice,* Auction No. 37 was originally scheduled for February 21, 2001, but was subsequently postponed. Before Auction No. 37 was postponed in September 2001, on September 25, 2000, the Bureaus released the *Auction No. 37 Comment Public Notice,* 65 FR 59841, October 6, 2000, seeking comment on the establishment of reserve prices and/or minimum opening bids and procedures for Auction No. 37, in accordance with the Balanced Budget Act of 1997. On September 29, 2000, the Bureaus released the *Auction No. 37 Additional Comment Public Notice,* 65 FR 59841, October 6, 2000, adding eight additional vacant FM allotments to the auction inventory and seeking comment on auction procedures and minimum opening bids with respect to the additional allotments. On January 19, 2001, the Bureaus released the *Auction No. 37 2001 Procedures Public Notice,* 66 FR 8961, February 5, 2001, in which the Bureaus, *inter alia,* reduced the

minimum opening bids for the Auction No. 37 construction permits, and set forth the procedures to be followed in Auction No. 37.

3. In the *NCE Second Report and Order,* 68 FR 26220, May 15, 2003, the Commission established revised procedures through which NCE applicants could seek to reserve non-reserved FM channels. Pursuant to the Public Notice, *Media Bureau Opens Window to Permit Noncommercial Educational Reservation Showings for Certain Vacant FM Allotments,* released September 30, 2003, 18 FCC Rcd 19600 (2003), MB opened a window to permit NCE reservation showings for certain FM allotments. By the reservation filing deadline, NCE applicants had filed petitions to reserve 60 of the channels previously included in the Auction No. 37 inventory. Those channels have been removed from the auction inventory while reservation showings are being evaluated. Auction No. 37 will proceed with the remaining vacant FM allotments. In the *2004 Auction No. 37 Revised Comment Public Notice,* the Bureaus again sought comment on the minimum opening bids and procedures for Auction No. 37.

ii. Construction Permits to Be Auctioned

4. Auction No. 37 will consist of 290 construction permits in the FM Broadcast service for stations throughout the United States, Guam, and American Samoa. These construction permits are for vacant FM allotments, reflecting FM channels assigned to the Table of FM Allotments, 47 CFR 73.202(b), pursuant to the Commission's established rulemaking procedures, designated for use in the indicated community. Pursuant to the policies established in the *Broadcast First Report and Order,* 63 FR 48615, September 11, 1998, applicants may apply for any vacant FM allotment, as specified in Attachment A of the *Auction No. 37 Procedures Public Notice;* applicants specifying the same FM allotment will be considered mutually exclusive and, thus, the construction permit for the FM allotment will be awarded by competitive bidding procedures. The reference coordinates for each vacant FM allotment are also listed in Attachment A of the *Auction No. 37 Procedures Public Notice.* When two or more short-form applications (FCC Form 175) for an FM allotment are accepted for filing, mutual exclusivity (''MX'') exists for auction purposes. Once mutual exclusivity exists for auction purposes, even if only one applicant within an MX Group submits an upfront payment, that applicant is required to submit a bid in order to obtain the construction permit.

B. Rules and Disclaimers

i. Relevant Authority

5. Prospective bidders must familiarize themselves thoroughly with the Commission's rules relating to the FM broadcast service contained in Title 47, Part 73 of the Code of Federal Regulations. Prospective bidders must also be familiar with the rules relating to broadcast auctions and competitive bidding proceedings contained in Title 47, Part 1, subpart Q, and Part 73, subpart I of the Code of Federal Regulations. Prospective bidders must also be thoroughly familiar with the procedures, terms and conditions contained in *Auction 37 Procedures Public Notice,* the *2004 Auction No. 37 Revised Comment Public Notice,* and the *Broadcast First Report and Order,* the *Broadcast Reconsideration Order,* 64 FR 56974, October 22, 1999, and the *New Entrant Bidding Credit Reconsideration Order,* 64 FR 44856, August 18, 1999. In particular, broadcasters should also familiarize themselves with the Commission's recent amendments and clarifications to its general competitive bidding rules.

6. The terms contained in the Commission's rules, relevant orders and public notices are not negotiable. The Commission may amend or supplement the information contained in our public notices at any time, and will issue public notices to convey any new or supplemental information to applicants. It is the responsibility of all applicants to remain current with all Commission rules and with all public notices pertaining to this auction.

ii. Prohibition of Collusion

7. To ensure the competitiveness of the auction process, the Commission's Part 1 rules prohibit applicants for any of the same geographic license areas from communicating with each other during the auction about bids, bidding strategies, or settlements unless such applicants have identified each other on their FCC Form 175 applications as parties with whom they have entered into agreements under § 1.2105(a)(2)(viii). Thus, applicants for any of the same geographic license areas must affirmatively avoid all discussions with each other that affect, or in their reasonable assessment, have the potential to affect, bids or bidding strategy. This prohibition begins at the short-form application filing deadline and ends at the down payment deadline after the auction. The ''geographic license area'' is the market designation of the particular service. For the FM service, the market designation is the particular vacant FM allotment (*e.g.*, Bethel, Alaska Channel 252C3, Market FM001). In Auction No. 37, for example, the rule would apply to applicants bidding for any of the same FM allotments. Therefore, applicants that apply to bid for an FM construction permit for the same allotment would be precluded from engaging in prohibited communications after the FCC Form 175 short-form application deadline. In addition, even if auction applicants are each eligible to bid on only one common FM allotment, they may not discuss with each other their bids or bidding strategies relating to any FM allotment that either is eligible to bid on. For purposes of this prohibition, § 1.2105(c)(7)(i) defines applicant as including all controlling interests in the entity submitting a short-form application to participate in the auction, as well as all holders of partnership and other ownership interests and any stock interest amounting to 10 percent or more of the entity, or outstanding stock, or outstanding voting stock of the entity submitting a short-form application, and all officers and directors of that entity.

8. Bidders competing for construction permits for any of the same designated markets are encouraged not to use the same individual as an authorized bidder. A violation of the anti-collusion rule could occur if an individual acts as the authorized bidder for two or more competing applicants, and conveys information concerning the substance of bids or bidding strategies between the bidders he or she is authorized to represent in the auction. Also, if the authorized bidders are different individuals employed by the same organization (*e.g.*, law firm or consulting firm), a violation could similarly occur. In such a case, at a minimum, applicants should certify on their applications that precautionary steps have been taken to prevent communication between authorized bidders and that applicants and their bidding agents will comply with the anti-collusion rule. However, the Bureaus caution that merely filing a certifying statement as part of an application will not outweigh specific evidence that collusive behavior has occurred, nor will it preclude the initiation of an investigation when warranted.

9. The Commission's anti-collusion rules allow applicants to form certain agreements during the auction, provided the applicants have not applied for construction permits in the same designated market. However, applicants may enter into bidding agreements

before filing their FCC Form 175, as long as they disclose the existence of the agreement(s) in their FCC Form 175. If parties agree in principle on all material terms prior to the short-form filing deadline, those parties must be identified on the short-form application under § 1.2105(c), even if the agreement has not been reduced to writing. If the parties have not agreed in principle by the filing deadline, an applicant would not include the names of those parties on its application, and may not continue negotiations with other applicants for the same designated market. By signing their FCC Form 175 short-form applications, applicants are certifying their compliance with §§ 1.2105(c) and 73.5002.

10. Section 1.65 of the Commission's rules requires an applicant to *maintain* the accuracy and completeness of information furnished in its pending application and to notify the Commission within 30 days of any substantial change that may be of decisional significance to that application. Thus, § 1.65 requires auction applicants that engage in communications of bids or bidding strategies that result in a bidding agreement, arrangement or understanding not already identified on their short-form applications to promptly disclose any such agreement, arrangement or understanding to the Commission by amending their pending applications. In addition, § 1.2105(c)(6) requires all auction applicants to report prohibited discussions or disclosures regarding bids or bidding strategy to the Commission in writing immediately, but in no case later than five business days after the communication occurs, even if the communication does not result in an agreement or understanding regarding bids or bidding strategy that must be reported under § 1.65.

11. Applicants that are winning bidders will be required to disclose in their long-form applications the specific terms, conditions, and parties involved in all bidding consortia, joint ventures, partnerships, and other arrangements entered into relating to the competitive bidding process. Any applicant found to have violated the anti-collusion rule may be subject to sanctions, including forfeiture of its upfront payment, down payment or full bid amount, and may be prohibited from participating in future auctions. In addition, applicants are reminded that they are subject to the antitrust laws, which are designed to prevent anticompetitive behavior in the marketplace.

12. A summary listing of documents from the Commission and the Bureaus addressing the application of the anti-collusion rules may be found in Attachment F of the *Auction No. 37 Procedures Public Notice.*

iii. Due Diligence

13. Potential bidders are reminded that they are solely responsible for investigating and evaluating all technical and market place factors that may have a bearing on the value of the broadcast facilities in this auction. The FCC makes no representations or warranties about the use of this spectrum for particular services. Applicants should be aware that an FCC auction represents an opportunity to become an FCC permittee in the broadcast service, subject to certain conditions and regulations. An FCC auction does not constitute an endorsement by the FCC of any particular service, technology, or product, nor does an FCC construction permit or license constitute a guarantee of business success. Applicants should perform their individual due diligence before proceeding as they would with any new business venture.

14. In particular, potential bidders are strongly encouraged to review all underlying Commission orders, such as the specific *Report and Order* amending the FM Table of Allotments and allotting the FM channel(s) on which they plan to bid. *Reports and Orders* adopted in FM allotment rulemaking proceedings often include anomalies such as site restrictions or expense reimbursement requirements. Bidders are also responsible for reviewing all pending rulemaking petitions and open proceedings that might affect the FM allotment(s) on which they plan to bid. Additionally, potential bidders should perform technical analyses sufficient to assure them that, should they prevail in competitive bidding for a given FM allotment, they will be able to build and operate facilities that will fully comply with the Commission's technical and legal requirements.

15. Potential bidders are also strongly encouraged to conduct their own research prior to Auction No. 37 in order to determine the existence of any pending administrative or judicial proceedings that might affect their decision to participate in the auction. Participants in Auction No. 37 are strongly encouraged to continue such research throughout the auction.

16. Potential bidders should also be aware that certain pending and future applications (including those for modification), petitions for rulemaking, requests for special temporary authority, waiver requests, petitions to deny, petitions for reconsideration, informal oppositions, and applications for review before the Commission may relate to particular applicants or incumbent permittees or the construction permits available in Auction No. 37. In addition, pending and future judicial proceedings may relate to particular applicants or incumbent permittees, or the construction permits available in Auction No. 37. Prospective bidders are responsible for assessing the likelihood of the various possible outcomes, and considering their potential impact on construction permits available in this auction.

17. Prospective bidders should perform due diligence to identify and consider all proceedings that may affect the construction permits being auctioned. We note that resolution of such matters could have an impact on the availability of spectrum for Auction No. 37. In addition, although the Commission may continue to act on various pending applications, informal objections, petitions, and other requests for Commission relief, some of these matters may not be resolved by the time of the auction.

18. Bidders are solely responsible for identifying associated risks and for investigating and evaluating the degree to which such matters may affect their ability to bid on, otherwise acquire, or make use of the construction permits available in Auction No. 37. Potential bidders are strongly encouraged to physically inspect any sites located in, or near, the FM allotment for which they plan to bid.

19. Potential bidders may research the licensing database for the Media Bureau on the Internet in order to determine which channels are already licensed to incumbent licensees. Licensing records for the Media Bureau are contained in the Media Bureau's Consolidated Data Base System (CDBS) and may be researched on the Internet at *http://www.fcc.gov/mb/*. Potential bidders may query the database online and download a copy of their search results if desired. Detailed instructions on using Search for Station Information, Search for Ownership Report Information and Search for Application Information and downloading query results are available online by selecting the CDBS Public Access (main) button at the bottom of the Electronic Filing and Public Access list section.

20. The Commission makes no representations or guarantees regarding the accuracy or completeness of information in its databases or any third party databases, including, for example, court docketing systems. To the extent the Commission's databases may not include all information deemed necessary or desirable by a bidder,

bidders may obtain or verify such information from independent sources or assume the risk of any incompleteness or inaccuracy in said databases. Furthermore, the Commission makes no representations or guarantees regarding the accuracy or completeness of information that has been provided by incumbent licensees and incorporated into the database.

iv. Bidder Alerts

21. All applicants must certify on their FCC Form 175 applications under penalty of perjury that they are legally, technically, financially and otherwise qualified to hold a construction permit, and not in default on any payment for Commission construction permits or licenses (including down payments) or delinquent on any non-tax debt owed to any Federal agency. Prospective bidders are reminded that submission of a false certification to the Commission is a serious matter that may result in severe penalties, including monetary forfeitures, construction permit or license revocations, exclusion from participation in future auctions, and/or criminal prosecution.

22. As is the case with many business investment opportunities, some unscrupulous entrepreneurs may attempt to use Auction No. 37 to deceive and defraud unsuspecting investors. Common warning signals of fraud include the following:

- The first contact is a ''cold call'' from a telemarketer, or is made in response to an inquiry prompted by a radio or television infomercial.
- The offering materials used to invest in the venture appear to be targeted at IRA funds, for example by including all documents and papers needed for the transfer of funds maintained in IRA accounts.
- The amount of investment is less than $25,000.
- The sales representative makes verbal representations that: (a) The Internal Revenue Service (''IRS''), Federal Trade Commission (''FTC''), Securities and Exchange Commission (''SEC''), FCC, or other government agency has approved the investment; (b) the investment is not subject to State or Federal securities laws; or (c) the investment will yield unrealistically high short-term profits. In addition, the offering materials often include copies of actual FCC releases, or quotes from FCC personnel, giving the appearance of FCC knowledge or approval of the solicitation.

23. Information about deceptive telemarketing investment schemes is available from the FTC at (202) 326–2222 and from the SEC at (202) 942–7040. Complaints about specific deceptive telemarketing investment schemes should be directed to the FTC, the SEC, or the National Fraud Information Center at (800) 876–7060. Consumers who have concerns about specific proposals regarding Auction No. 37 may also call the FCC Consumer Center at (888) CALL–FCC ((888) 225–5322).

v. National Environmental Policy Act (NEPA) Requirements

24. Permittees must comply with the Commission's rules regarding the National Environmental Policy Act (NEPA). The construction of a broadcast facility is a federal action and the permittee must comply with the Commission's NEPA rules for each such facility.

C. Auction Specifics

i. Auction Date

25. The auction will begin on Wednesday, November 3, 2004, as announced in the *Auction No. 37 Comment Public Notice.* The initial schedule for bidding will be announced by public notice at least one week before the start of the auction. Unless otherwise announced, bidding on all construction permits will be conducted on each business day until bidding has stopped on all construction permits.

ii. Auction Title

26. Auction No. 37—FM Broadcast.

iii. Bidding Methodology

27. The bidding methodology for Auction No. 37 will be simultaneous multiple round bidding. The Commission will conduct this auction over the Internet, and telephonic bidding will be available as well. As a contingency plan, bidders may also dial in to the FCC Wide Area Network. Qualified bidders are permitted to bid telephonically or electronically.

iv. Pre-Auction Dates and Deadlines

28. The following is a list of important dates related to Auction No. 57:

Auction Seminar—July 22, 2004
Short-Form Application (FCC FORM 175) Filing Window Opens—July 22, 2004; noon, e.t.
Short-Form Application (FCC FORM 175) Filing Window Deadline—August 6, 2004; 6 p.m. e.t.
Upfront Payments (via wire transfer)—September 24, 2004; 6 p.m. e.t.
Mock Auction—October 29, 2004
Auction Begins—November 3, 2004

v. Requirements for Participation

29. Those wishing to participate in the auction must:

- Submit a short form application (FCC Form 175) electronically by 6 p.m. e.t., August 6, 2004. No other application may be substituted for the FCC Form 175.
- Submit a sufficient upfront payment and a FCC Remittance Advice Form (FCC Form 159) by 6 p.m. e.t., September 24, 2004.
- Comply with all provisions outlined in this *Auction No. 37 Procedures Public Notice* and applicable Commission rules.

30. Two commenters suggest that we establish restrictions on which entities are eligible to participate in Auction No. 37. The Bureaus' process for seeking comment on auction procedures is not the appropriate forum to address such rule changes. Such an issue should have been raised in the context of a rulemaking proceeding establishing license eligibility rules for the FM Broadcast service.

vi. General Contact Information

General Auction Information, General Auction Questions, Seminar Registration
FCC Auctions Hotline (888) 225–5322, Press Option #2 or direct (717) 338–2888. Hours of service: 8 a.m.–5:30 p.m. e.t. Monday through Friday
Auction Legal Information, Auction Rules, Policies, Regulations
Auctions and Spectrum Access Division (202) 418–0660
Licensing Information Rules, Policies, Regulations, Licensing Issues, Engineering Issues, Due Diligence, Incumbency Issues
Audio Division (202) 418–2700
Technical Support, Electronic Filing, FCC Automated Auction System
FCC Auctions Technical Support Hotline (202) 414–1250 (Voice), (202) 414–1255 (TTY). Hours of service: 8 a.m. to 6:00 p.m. e.t., Monday through Friday
Payment Information, Wire Transfers, Refunds
FCC Auctions Accounting Group (202) 418–0578, (202) 418–2843 (Fax)
Telephonic Bidding
Will be furnished only to qualified bidders
Press Information
Lauren Patrich at (202) 418–7944
FCC Forms
(800) 418–3676 (outside Washington, DC), (202) 418–3676 (in the Washington Area) *http://www.fcc.gov/formpage.html*
FCC Internet Sites
http://www.fcc.gov, *http://wireless.fcc.gov/auctions*, *http://www.fcc.gov/mb/audio*, *ftp://*

ftp.fcc.gov

II. Short-Form (FCC Form 175) Application Requirements

31. Guidelines for completion of the short-form application (FCC Form 175) are set forth in Attachment D of the *Auction No. 37 Procedures Public Notice.* The short-form application seeks the applicant's name and address, legal classification, status, new entrant bidding credit eligibility, identification of the construction permit(s) sought, the authorized bidders and contact persons. All applicants must certify on their FCC Form 175 applications under penalty of perjury that they are legally, technically, financially and otherwise qualified to hold a license and, as discussed below in Section II.E (Provisions Regarding Defaulters and Former Defaulters), that they are not in default on any payment for Commission licenses (including down payments) or delinquent on any non-tax debt owed to any Federal agency. To participate in Auction No. 37, no other application may be substituted for the FCC Form 175.

A. Permit Selection

32. In the FCC Form 175 for certain previous non-broadcast auctions, applicants could use a ''Save All Licenses'' function to indicate that they wanted to pursue all markets being auctioned. One commenter suggests we not include a ''Save All Licenses'' function in the Form 175 for Auction No. 37. The commenter claims that inclusion of this function will increase the likelihood that applicants will use the function rather than selecting only those allotments that they wish to construct and operate. We agree that a ''Save All Licenses'' function is appropriate for wireless auctions, but it is inappropriate in the broadcast context. Thus, on the FCC Form 175 for Auction No. 37, applicants must indicate FM construction permits that they want to pursue by selecting the FM allotments individually.

B. Ownership Disclosure Requirements (FCC Form 175 Exhibit A)

33. The Commission indicated in the *Broadcast First Report and Order* that, for purposes of determining eligibility to participate in a broadcast auction, the uniform Part 1 ownership disclosure standards would apply. Therefore, in completing the FCC Form 175, all applicants will be required to file an ''Exhibit A'' and provide information required by §§ 1.2105 and 1.2112 of the Commission's rules, thus providing a full and complete statement of the ownership of the bidding entity. The ownership disclosure standards for the short-form are set forth in § 1.2112 of the Commission's rules.

C. Consortia and Joint Bidding Arrangements (FCC Form 175 Exhibit B)

34. Applicants will be required to identify on their short-form applications any parties with whom they have entered into any consortium arrangements, joint ventures, partnerships or other agreements or understandings that relate in any way to the construction permits being auctioned, including any agreements relating to post-auction market structure. Applicants will also be required to certify on their short-form applications that they have not entered into any explicit or implicit agreements, arrangements or understandings of any kind with any parties, other than those identified, regarding the amount of their bids, bidding strategies, or the particular construction permits on which they will or will not bid. As discussed above, if an applicant has had discussions, but has not reached a joint bidding agreement by the short-form deadline, it would not include the names of parties to the discussions on its applications and may not continue discussions with applicants for the same market after the deadline. Where applicants have entered into consortia or joint bidding arrangements, applicants must submit an ''Exhibit B'' to the FCC Form 175.

35. A party holding a non-controlling, attributable interest in one applicant will be permitted to acquire an ownership interest in, form a consortium with, or enter into a joint bidding arrangement with other applicants for construction permits in the same market provided that (i) the attributable interest holder certifies that it has not and will not communicate with any party concerning the bids or bidding strategies of more than one of the applicants in which it holds an attributable interest, or with which it has formed a consortium or entered into a joint bidding arrangement; and (ii) the arrangements do not result in a change in control of any of the applicants. While the anti-collusion rules do not prohibit non-auction related business negotiations among auction applicants, applicants are reminded that certain discussions or exchanges could touch upon impermissible subject matters because they may convey pricing information and bidding strategies. Such subject areas include, but are not limited to, issues such as management, sales, local marketing agreements, rebroadcast agreements, and other transactional agreements.

D. New Entrant Bidding Credit (FCC Form 175 Exhibit C)

36. To fulfill its obligations under § 309(j) and further its long-standing commitment to the diversification of broadcast facility ownership, the Commission adopted a tiered New Entrant Bidding Credit for broadcast auction applicants with no, or very few, other media interests.

i. Eligibility

37. The interests of the bidder, and of any individuals or entities with an attributable interest in the bidder, in other media of mass communications shall be considered when determining a bidder's eligibility for the New Entrant Bidding Credit. The bidder's attributable interests shall be determined as of the short-form application (FCC Form 175) filing deadline—August 6, 2004. Bidders intending to divest a media interest or make any other ownership changes, such as resignation of positional interests, in order to avoid attribution for purposes of qualifying for the New Entrant Bidding Credit must have consummated such divestment transactions or have completed such ownership changes by no later than the short-form filing deadline—August 6, 2004.

38. Under traditional broadcast attribution rules, those entities or individuals with an attributable interest in a bidder include:

- All officers and directors of a corporate bidder;
- Any owner of 5 percent or more of the voting stock of a corporate bidder;
- All partners and limited partners of a partnership bidder, unless the limited partners are sufficiently insulated; and
- All members of a limited liability company, unless sufficiently insulated.

39. In cases where a bidder's spouse or close family member holds other media interests, such interests are not automatically attributable to the bidder. The Commission decides attribution issues in this context based on certain factors traditionally considered relevant. Bidders should note that the mass media attribution rules were recently revised.

40. Bidders are also reminded that, by the New Entrant Bidding Credit Reconsideration Order, the Commission further refined the eligibility standards for the New Entrant Bidding Credit, judging it appropriate to attribute the media interests held by very substantial investors in, or creditors of, a bidder claiming new entrant status. Specifically, the attributable mass media interests held by an individual or entity with an equity and/or debt interest in a

bidder shall be attributed to that bidder for purposes of determining its eligibility for the New Entrant Bidding Credit, if the equity and debt interests, in the aggregate, exceed 33 percent of the total asset value of the bidder, even if such an interest is non-voting.

41. Generally, media interests will be attributable for purposes of the New Entrant Bidding Credit to the same extent that such other media interests are considered attributable for purposes of the broadcast multiple ownership rules. However, attributable interests held by a winning bidder in existing low power television, television translator or FM translator facilities will not be counted among the bidders' other mass media interests in determining its eligibility for a New Entrant Bidding Credit. A medium of mass communications is defined in 47 CFR 73.5008(b). Full service noncommercial educational stations, on both reserved and non-reserved channels, are included among ''media of mass communications'' as defined in § 73.5008(b).

ii. Application Requirements

42. In addition to the ownership information required on Exhibit A, applicants are required to file supporting documentation on Exhibit C to their FCC Form 175 applications to establish that they satisfy the eligibility requirements to qualify for a New Entrant Bidding Credit. In those cases where a New Entrant Bidding Credit is being sought, a certification under penalty of perjury must be set forth in Exhibit C. An applicant claiming that it qualifies for a 35 percent new entrant bidding credit must provide a certification, under penalty of perjury, that neither it nor any of its attributable interest holders have any attributable interests in any other media of mass communications. An applicant claiming that it qualifies for a 25 percent new entrant bidding credit must provide a certification, under penalty of perjury, that neither it nor any of its attributable interest holders have any attributable interests in more than three media of mass communications, and must identify and describe such media of mass communications.

iii. Bidding Credits

43. Applicants that qualify for the New Entrant Bidding Credit, as set forth in 47 CFR 73.5007, are eligible for a bidding credit that represents the amount by which a bidder's winning bid is discounted. The size of a New Entrant Bidding Credit depends on the number of ownership interests in other media of mass communications that are attributable to the bidder-entity and its attributable interest-holders:

- A 35 percent bidding credit will be given to a winning bidder if it, and/or any individual or entity with an attributable interest in the winning bidder, has no attributable interest in any other media of mass communications, as defined in 47 CFR 73.5008;
- A 25 percent bidding credit will be given to a winning bidder if it, and/or any individual or entity with an attributable interest in the winning bidder, has an attributable interest in no more than three mass media facilities, as defined in 47 CFR 73.5008;
- No bidding credit will be given if any of the commonly owned mass media facilities serve the same area as the proposed broadcast station, as defined in 47 CFR 73.5007(b), or if the winning bidder, and/or any individual or entity with an attributable interest in the winning bidder, has attributable interests in more than three mass media facilities.

44. Bidding credits are not cumulative; qualifying applicants receive either the 25 percent or the 35 percent bidding credit, but not both. Attributable interests are defined in 47 CFR. 73.3555 and Note 2 of that section. Bidders should note that unjust enrichment provisions apply to a winning bidder that utilizes a bidding credit and subsequently seeks to assign or transfer control of its license or construction permit to an entity not qualifying for the same level of bidding credit.

45. Several commenters request that we revise the new entrant bidding credits available for Auction No. 37. One commenter suggests we adopt certain measures to prevent what it terms ''bidding credit fraud,'' whereby certain bidders initially claim eligibility for new entrant bidding credits and thereafter change their status to the alleged disadvantage of other bidders. Another commenter suggests that we revise the eligibility criteria for new entrant bidding credits. A third commenter, suggests a graduated scale of bidding credits ranging from a 10 to 50 percent discount for bidders with no commercial stations and proposes that bidders with a large number of commercial stations pay up to five times the amount of their winning bid.

46. Several commenters provide suggestions relating to the broad context of bidding credits and bidding preferences in Auction No. 37. For example, one commenter requests that the Commission provide bidding credits for minority-owned businesses in Auction No. 37. Another commenter requests that we first auction the construction permits offered in Auction No. 37 to minority businesses before the announced start date for Auction No. 37. A third commenter suggests a bidding credit for an applicant that has its main office within 50 miles of the allotment on which it is bidding.

47. First, we disagree with the assumption underlying comments that applicants that lose or change their new entrant bidding credit status have necessarily engaged in fraudulent misrepresentation. To the extent that an applicant makes a misrepresentation or lacks candor in the course of its claim for a bidding credit, the Commission has sufficient mechanisms to address such conduct, including the petition to deny process. We therefore find no reason to adopt special measures to address these concerns.

48. We also reject various suggestions by commenters to revise the criteria for and the amount of the new entrant bidding credit and to adopt new bidding credits based on other criteria. Implementation of these proposals would require amendment of the Commission's competitive bidding and broadcast service rules, which can only be accomplished through a Commission rulemaking proceeding. The Bureau's process for seeking comment on auction procedures is not the appropriate forum to address such rule changes. Such rule changes should have been raised in the context of the rulemaking proceeding establishing bidding credits for the FM Broadcast service.

E. Provisions Regarding Defaulters and Former Defaulters (FCC Form 175 Exhibit D)

49. Each applicant must certify on its FCC Form 175 application under penalty of perjury that the applicant, its controlling interests, its affiliates, and the affiliates of its controlling interests, as defined by § 1.2110, are not in default on any payment for Commission licenses (including down payments) and not delinquent on any non-tax debt owed to any Federal agency. In addition, each applicant must include in its FCC Form 175 application a statement made under penalty of perjury indicating whether or not the applicant, its affiliates, its controlling interests, or the affiliates of its controlling interest, as defined by § 1.2110, have ever been in default on any Commission licenses or have ever been delinquent on any non-tax debt owed to any Federal agency. Applicants must include this statement as Exhibit D of the FCC Form 175. Prospective applicants are reminded that submission of a false certification to the

Commission is a serious matter that may result in severe penalties, including monetary forfeitures, license revocations, exclusion from participation in future auctions, and/or criminal prosecution.

50. ''Former defaulters''—*i.e.,* applicants, including their attributable interest holders, that in the past have defaulted on any Commission licenses or been delinquent on any non-tax debt owed to any Federal agency, but that have since remedied all such defaults and cured all of their outstanding non-tax delinquencies—are eligible to bid in Auction No. 37, provided that they are otherwise qualified. However, as discussed *infra* in section III.D.iii, former defaulters are required to pay upfront payments that are fifty percent more than the normal upfront payment amounts. One commenter, although agreeing with the current defaulter and former defaulter certification requirement, suggests as an alternative that if a former defaulter has remedied all defaults, cured all outstanding delinquencies and remained debt-free for at least ten years, it only be required to pay the standard upfront payment. However, implementation of this suggestion would require amendment of § 1.2106(a) of the Commission's rules, which can only be accomplished through a Commission rulemaking proceeding.

F. Installment Payments

51. One commenter suggests we allow small businesses to pay for their licenses by making installment payments throughout the eight-year initial license period. In the *Part 1 Third Report and Order,* 63 FR 770 (January 7, 1998), the Commission suspended the use of installment payments for the foreseeable future. Accordingly, installment payment plans will not be available in Auction No. 37.

G. Other Information (FCC Form 175 Exhibits E and F)

52. Applicants owned by minorities or women, as defined in 47 CFR 2110(b)(2), may attach an exhibit (Exhibit E) regarding this status. This applicant status information is collected for statistical purposes only and assists the Commission in monitoring the participation of ''designated entities'' in its auctions. Applicants wishing to submit additional information may do so on Exhibit F.

H. Minor Modifications to Short-Form Applications (FCC Form 175)

53. After the short-form filing deadline (6 p.m. e.t. on August 6, 2004), applicants may make only minor changes to their FCC Form 175 applications. Applicants will not be permitted to make major modifications to their applications (*e.g.*, change their construction permit selections, change the certifying official, change control of the applicant). *See* 47 CFR 1.2105. Permissible minor changes include, for example, deletion and addition of authorized bidders (to a maximum of three) and revision of certain exhibits. Applicants should make these modifications to their FCC Form 175 electronically and submit a letter, briefly summarizing the changes, by electronic mail to the attention of Margaret Wiener, Chief, Auctions and Spectrum Access Division, at the following address: *auction37@fcc.gov.* The electronic mail summarizing the changes must include a subject or caption referring to Auction No. 37. The Bureaus request that parties format any attachments to electronic mail as Adobe® Acrobat® (pdf) or Microsoft® Word documents.

54. A separate copy of the letter should be faxed to the attention of Kathryn Garland at (717) 338–2850.

I. Maintaining Current Information in Short-Form Applications (FCC Form 175)

55. Section 1.65 of the Commission's rules requires an applicant to maintain the accuracy and completeness of information furnished in its pending application and to notify the Commission within 30 days of any substantial change that may be of decisional significance to that application. Amendments reporting substantial changes of possible decisional significance in information contained in FCC Form 175 applications, as defined by 47 CFR 1.2105(b)(2), will not be accepted and may in some instances result in the dismissal of the FCC Form 175 application.

III. Pre-Auction Procedures

A. Auction Seminar

56. On Thursday, July 22, 2004, the FCC will sponsor a seminar for Auction No. 37 at the Federal Communications Commission, located at 445 12th Street, SW., Washington, DC. The seminar will provide attendees with information about pre-auction procedures, auction conduct, the FCC Automated Auction System, auction rules, and the FM broadcast service rules. The seminar will also provide an opportunity for prospective bidders to ask questions of FCC staff.

57. To register, complete the registration form attached hereto as Attachment B of the *Auction No. 37 Procedures Public Notice* and submit it by Monday, July 19, 2004. Registrations are accepted on a first-come, first-served basis. The seminar is free of charge.

58. For potential bidders who are unable to attend, Audio/Video of this seminar will be webcast live from the FCC's Audio/Video Events page at *http://www.fcc.gov/realaudio/.* A recording of the webcast will also be available for playback from the FCC's A/V Archives Page following the meeting.

B. Short-Form Application (FCC Form 175)—Due August 6, 2004

59. In order to be eligible to bid in this auction, applicants must first submit a FCC Form 175 application. This application must be submitted electronically and received at the Commission no later than 6 p.m. e.t. on August 6, 2004. Late applications will not be accepted.

60. There is no application fee required when filing an FCC Form 175. However, to be eligible to bid, an applicant must submit an upfront payment. *See* Section III.D, *infra.* Applicants must submit only one FCC Form 175, regardless of the number of vacant FM allotments selected.

61. Pursuant to procedures established in the Broadcast First Report and Order, the Media Bureau will impose a temporary freeze on the filing of FM minor modification applications during the period that FCC Form 175 applications may be filed for FM Auction No. 37. A separate public notice addressing this temporary freeze has been released.

i. Electronic Filing

62. Applicants must file their FCC Form 175 applications electronically. Applications may generally be filed at any time beginning at noon e.t. on July 22, 2004, until 6 p.m. e.t. on August 6, 2004. Applicants are strongly encouraged to file early and are responsible for allowing adequate time for filing their applications. Applicants may update or amend their electronic applications multiple times until the filing deadline on August 6, 2004.

63. Applicants must press the ''SUBMIT Application'' button on the ''Submission'' page of the electronic form to successfully submit their FCC Form 175s. Any form that is not submitted will not be reviewed by the FCC. Information about accessing the FCC Form 175 is included in Attachment C of the *Auction No. 37 Procedures Public Notice.* Technical support is available at (202) 414–1250 (voice) or (202) 414–1255 (text telephone (TTY)); hours of service are

Monday through Friday, from 8 a.m. to 6 p.m. e.t. In order to provide better service to the public, *all calls to the hotline are recorded.*

ii. Completion of the FCC Form 175

64. Applicants should carefully review 47 CFR 1.2105 and 73.5002, and must complete all items on the FCC Form 175. Instructions for completing the FCC Form 175 are in Attachment D of the *Auction No. 37 Procedures Public Notice.* Applicants are encouraged to begin preparing the required attachments for FCC Form 175 prior to submitting the form. Attachments C and D of the *Auction No. 37 Procedures Public Notice* provide information on the required attachments and appropriate formats.

iii. Electronic Review of FCC Form 175

65. The FCC Form 175 electronic review system may be used to locate and print applicants' FCC Form 175 information. There is no fee for accessing this system. *See* Attachment C of the *Auction No. 37 Procedures Public Notice* for details on accessing the review system.

66. Applicants may also view other applicants' completed FCC Form 175s after the filing deadline has passed, and the FCC has issued a public notice explaining the status of the applications.

Note: Applicants should not include their TIN/EIN or other sensitive information on any exhibit/attachment to be uploaded. Contents of exhibits/attachments become available for public access once the Status Public Notice is released.

C. Application Processing and Minor Corrections

67. After the deadline for filing the FCC Form 175 applications has passed, the FCC will process all timely submitted applications to determine which are acceptable for filing, and subsequently will issue a public notice identifying: (i) Those applications accepted for filing; (ii) those applications rejected; and (iii) those applications which have minor defects that may be corrected, and the deadline for filing such corrected applications.

68. Non-mutually exclusive applications will be listed in a subsequent Public Notice to be released by the Bureaus. Such applications will not proceed to auction, but will proceed in accordance with instructions set forth in the Public Notice. All mutually exclusive applications will be considered under the relevant procedures for conflict resolution. Mutually exclusive commercial applications will proceed to auction. In the *NCE Second Report and Order,* the Commission held that applications for NCE FM stations on non-reserved spectrum, filed during an FM filing window, will be returned as unacceptable for filing if mutually exclusive with any application for a commercial station. Accordingly, if an FCC Form 175 filed during the Auction No. 37 filing window identifying the applicant as noncommercial educational is mutually exclusive with any application filed during that window by an applicant for a commercial station, the former will be returned as unacceptable for filing.

D. Upfront Payments—Due September 24, 2004

69. In order to be eligible to bid in the auction, applicants must submit an upfront payment accompanied by an FCC Remittance Advice Form (FCC Form 159). After completing the FCC Form 175, filers will have access to an electronic version of the FCC Form 159 that can be printed and faxed to Mellon Bank in Pittsburgh, PA. All upfront payments must be received at Mellon Bank by 6 p.m. e.t. on September 24, 2004. Failure to deliver the upfront payment by the September 24, 2004, deadline will result in dismissal of the application and disqualification from participation in the auction. For specific details regarding upfront payments, see III.D. of the *Auction No. 37 Procedures Public Notice.*

i. Making Auction Payments by Wire Transfer

70. Wire transfer payments must be received by 6 p.m. e.t. on September 24, 2004. To avoid untimely payments, applicants should discuss arrangements (including bank closing schedules) with their banker several days before they plan to make the wire transfer, and allow sufficient time for the transfer to be initiated and completed before the deadline.

71. Applicants must fax a completed FCC Form 159 (Revised Feb. 2003) to Mellon Bank at (412) 209–6045 at least one hour before placing the order for the wire transfer (but on the same business day). On the cover sheet of the fax, write ''Wire Transfer—Auction Payment for Auction Event No. 37.'' In order to meet the Commission's upfront payment deadline, an applicant's payment must be credited to the Commission's account by the deadline. Applicants are responsible for obtaining confirmation from their financial institution that Mellon Bank has timely received their upfront payment and deposited it in the proper account.

ii. Amount of Upfront Payment

72. In the *Part 1 Order,* 62 FR 13540, March 21, 1997, the Commission delegated to the Bureaus the authority and discretion to determine appropriate upfront payment(s) for each auction. In addition, in the *Part 1 Fifth Report and Order,* 65 FR 52323, August 29, 2000, the Commission ordered that ''former defaulters,'' *i.e.*, applicants that have ever been in default on any Commission license or have ever been delinquent on any non-tax debt owed to any Federal agency, be required to pay upfront payments 50 percent greater than non-''former defaulters.'' For purposes of this calculation, the ''applicant'' includes the applicant itself, its affiliates, its controlling interests, and affiliates of its controlling interests, as defined by § 1.2110 of the Commission's rules.

73. The *Auction No. 37 Comment Public Notice* and the *2004 Auction No. 37 Revised Comment Public Notice,* proposes that the amount of the upfront payment would determine the number of bidding units on which a bidder may place bids. In order to bid on a construction permit, otherwise qualified bidders that applied for that construction permit on FCC Form 175 must have an eligibility level that meets or exceeds the number of bidding units assigned to that construction permit. At a minimum, therefore, an applicant's total upfront payment must be enough to establish eligibility to bid on at least one of the construction permit applied for on FCC Form 175, or else the applicant will not be eligible to participate in the auction. An applicant does not have to make an upfront payment to cover all construction permits for which the applicant has applied on its FCC Form 175, but rather to cover the maximum number of bidding units that are associated with construction permits on which the bidder wishes to place bids and hold high bids at any given time.

74. In the *2001 Procedures Public Notice,* after reviewing comments received in response to the *Auction No. 37 Comment Public Notice,* we reduced the upfront payments originally proposed in that *Public Notice,* setting forth the revised upfront payment amounts in Attachment A to the *2001 Procedures Public Notice.* One commenter, in response to the *2004 Auction No. 37 Revised Comment Public Notice,* suggests we further reduce the upfront payments so that none is greater than $125,000, and that any allotment representing the first local transmission service to a community with a population under 10,000 have an

upfront payment not to exceed $5,000, regardless of station class. This commenter further suggests that the upfront payments be reduced to 10 percent of the minimum opening bid values listed in the *2004 Auction No. 37 Revised Comment Public Notice,* and that a bidders upfront payment should be no higher than the single highest minimum opening bid for any allotment the bidder has selected in its FCC Form 175. We do not adopt these suggestions. The Media Bureau has evaluated each allotment and assigned an upfront payment amount, taking into account various factors related to the efficiency of the auction and the potential value of the spectrum, including the type of service and class of facility offered, market size, population covered by the proposed FM broadcast facility, industry cash flow data, and recent broadcast transactions. Having once revised these amounts, in the *2001 Procedures Public Notice,* the Media Bureau has determined that the revised upfront payment amounts set forth in Attachment A to the *2004 Auction No. 37 Revised Comment Public Notice* are appropriate for these allotments.

75. We adopt our proposal. The specific upfront payments and bidding units for each construction permit are set forth in Attachment A of the *Auction No. 37 Procedures Public Notice.*

76. In calculating its upfront payment amount, an applicant should determine the *maximum* number of bidding units on which it may wish to be active (bidding units associated with construction permits on which the bidder has the standing high bid from the previous round and construction permits on which the bidder places a bid in the current round) in any single round, and submit an upfront payment covering that number of bidding units. In order to make this calculation, an applicant should add together the upfront payments for all construction permits on which it seeks to bid in any given round. Bidders should check their calculations carefully, as there is no provision for increasing a bidder's maximum eligibility after the upfront payment deadline.

77. Former defaulters should calculate their upfront payment for all construction permits by multiplying the number of bidding units they wish to purchase by 1.5. In order to calculate the number of bidding units to assign to former defaulters, the Commission will divide the upfront payment received by 1.5 and round the result up to the nearest bidding unit.

Note: An applicant's actual bidding in any round will be limited by the bidding units reflected in its upfront payment, notwithstanding the number of construction permits the applicant has indicated in its FCC Form 175.

iii. Applicant's Wire Transfer Information for Purposes of Refunds of Upfront Payments

78. The Commission will use wire transfers for all Auction No. 37 refunds. To ensure that refunds of upfront payments are processed in an expeditious manner, the Commission is requesting that all pertinent information as listed below be supplied to the FCC.

Name of Bank, ABA Number, Contact and Phone Number, Account Number to Credit, Name of Account Holder, FCC Registration Number (FRN), Taxpayer Identification Number (see below), Correspondent Bank (if applicable), ABA Number, and Account Number.

79. Applicants can provide the information electronically during the initial short-form filing window after the form has been submitted. Wire Transfer Instructions can also be manually faxed to the FCC, Financial Operations Center, Auctions Accounting Group, ATTN: Gail Glasser, at (202) 418–2843 by September 24, 2004. All refunds will be returned to the payer of record as identified on the FCC Form 159 unless the payer submits written authorization instructing otherwise. For additional information, please call Gail Glasser at (202) 418–0578.

E. Auction Registration

80. Approximately ten days before the auction, the FCC will issue a public notice announcing all qualified bidders for the auction. Qualified bidders are those applicants whose FCC Form 175 applications have been accepted for filing and have timely submitted upfront payments sufficient to make them eligible to bid on at least one of the construction permits for which they applied.

81. All qualified bidders are automatically registered for the auction. Registration materials will be distributed prior to the auction by two separate overnight mailings, each containing the confidential bidder identification number (BIN) and the other containing the SecurID cards, both of which are required to place bids. These mailings will be sent only to the contact person at the contact address listed in the FCC Form 175.

82. Applicants that do not receive both registration mailings will not be able to submit bids. Therefore, any qualified applicant that has not received both mailings by noon on Wednesday, October 27, 2004, should contact the Auctions Hotline at (717) 338–2888. Receipt of both registration mailings is critical to participating in the auction, and each applicant is responsible for ensuring it has received all of the registration material.

83. Qualified bidders should note that lost bidder identification numbers or SecurID cards can be replaced only by appearing *in person* at the FCC Headquarters located at 445 12th Street, SW., Washington, DC 20554. Only an authorized representative or certifying official, as designated on an applicant's FCC Form 175, may appear in person with two forms of identification (one of which must be a photo identification) in order to receive replacements. Qualified bidders requiring replacements must call technical support prior to arriving at the FCC.

F. Remote Electronic Bidding

84. The Commission will conduct this auction over the Internet, and telephonic bidding will be available as well. As a contingency plan, bidders may also dial in to the FCC Wide Area Network. Qualified bidders are permitted to bid telephonically or electronically. Each applicant should indicate its bidding preference—electronic or telephonic—on the FCC Form 175. In either case, each authorized bidder must have its own SecurID card, which the FCC will provide at no charge. Each applicant with one authorized bidder will be issued two SecurID cards, while applicants with two or three authorized bidders will be issued three cards. For security purposes, the SecurID cards and the FCC Automated Auction System user manual are only mailed to the contact person at the contact address listed on the FCC Form 175. Please note that each SecurID card is tailored to a specific auction; therefore, SecurID cards issued for other auctions or obtained from a source other than the FCC will not work for Auction No. 37. The telephonic bidding phone number will be supplied in the first overnight mailing, which also includes the confidential bidder identification number.

G. Mock Auction

85. All qualified bidders will be eligible to participate in a mock auction on Friday, October 29, 2004. The mock auction will enable applicants to become familiar with the FCC Automated Auction System prior to the auction. Participation by all bidders is strongly recommended. Details will be announced by public notice.

IV. Auction Event

86. The first round of bidding for Auction No. 37 will begin on Wednesday, November 3, 2004. The initial bidding schedule will be announced in a public notice listing the qualified bidders, which is released approximately 10 days before the start of the auction.

A. Auction Structure

i. Simultaneous Multiple Round Auction

87. In the *2004 Auction No. 37 Revised Comment Public Notice,* we proposed to award all construction permits in Auction No. 37 in a simultaneous multiple round auction. One commenter objects to the simultaneous multiple round bidding methodology, claiming that it is unfair for individuals and small groups who wish to bid on multiple construction permits. Bidding rounds at the beginning of the auction should provide sufficient time for bidders to enter bids on as many allocations as they have selected. We will modify the round schedule as the auction continues, making rounds shorter and more frequent as bidding activity decreases, which is typical as auctions progress. Any changes to the round schedule will be done based on our analysis of the bidding activity and should not prevent bidders from being able to place their bids before the conclusion of a round. We adopt our proposal. We conclude that it is operationally feasible and appropriate to auction the FM broadcast stations construction permits through a simultaneous multiple round auction. Unless otherwise announced, bids will be accepted on all construction permits in each round of the auction.

ii. Maximum Eligibility and Activity Rules

88. In the *Auction No. 37 Comment Public Notice* and the *2004 Auction No. 37 Revised Comment Public Notice,* we propose that the amount of the upfront payment submitted by a bidder would determine the initial (maximum) eligibility (as measured in bidding units) for each bidder. No comments were received concerning the eligibility rule, and we adopted the proposal in the *2001 Procedures Public Notice.*

89. For Auction No. 37, we adopt the maximum eligibility proposal. The amount of the upfront payment submitted by a bidder determines the initial eligibility (in bidding units) for each bidder. Note again that each construction permit is assigned a specific number of bidding units equal to the upfront payment listed in Attachment A of the *Auction No. 37 Procedures Public Notice* on a bidding unit per dollar basis. The total upfront payment defines the maximum number of bidding units on which the applicant will be permitted to bid and hold high bids in a round. As there is no provision for increasing a bidder's eligibility after the upfront payment deadline, applicants are cautioned to calculate their upfront payments carefully. The total upfront payment does not affect the total dollar amount a bidder may bid on any given construction permit.

90. In addition, we received no comments on our proposal for a single stage auction, and therefore adopted this proposal in the *2001 Procedures Public Notice.* In response to the *2004 Auction No. 37 Revised Comment Public Notice,* one commenter disagreed with the 100 percent activity level requirement and the potential eligibility reduction for failure to maintain a 100 percent activity level. In order to ensure that the auction closes within a reasonable period of time, an activity rule requires bidders to bid actively throughout the auction. Therefore, we adopt this proposal with the following activity requirement: In each round of the auction, a bidder desiring to maintain its current eligibility is required to be active on construction permits representing one hundred (100) percent of its current eligibility. A bidder's activity will be the sum of the bidding units associated with the construction permits upon which it places a bid during the current round and the bidding units associated with construction permits upon which it is the standing high bidder. That is, a bidder must either place a bid and/or be the standing high bidder during each round of the auction.

91. Failure to maintain the requisite activity level will result in the use of an activity rule waiver, if any remain, or a permanent reduction in the bidder's bidding eligibility, possibly eliminating the bidder from further bidding in the auction. To the extent that potential bidders require assistance in understanding these rules, we encourage them to attend the July 22, 2004, auction seminar, and participate in the October 29, 2004, mock auction.

iii. Activity Rule Waivers and Reducing Eligibility

92. Based upon our experience in previous auctions, we adopt our proposal that each bidder will be provided five activity rule waivers that may be used in any round during the course of the auction. Use of an activity rule waiver preserves the bidder's current bidding eligibility despite the bidder's activity in the current round being below the required level. An activity rule waiver applies to an entire round of bidding and not to a particular construction permit. We are satisfied that our practice of providing five waivers over the course of the auction provides a sufficient number of waivers and flexibility to the bidders, while safeguarding the integrity of the auction.

93. The FCC Automated Auction System assumes that bidders with insufficient activity would prefer to use an activity rule waiver (if available) rather than lose bidding eligibility. Therefore, the system will automatically apply a waiver (known as an ''automatic waiver'') at the end of any round where a bidder's activity level is below the minimum required unless: (i) The bidder has no more activity rule waivers available; or (ii) the bidder overrides the automatic application of a waiver by reducing eligibility, thereby meeting the minimum requirements. If a bidder has no waivers remaining and does not satisfy the required activity level, its current eligibility will be permanently reduced, possibly eliminating the bidder from further bidding in the auction.

94. A bidder that is eligible to bid on more than one construction permit and has insufficient activity may wish to reduce its bidding eligibility rather than use an activity rule waiver. If so, the bidder must affirmatively override the automatic waiver mechanism during the bidding period by using the reduce eligibility function in the bidding system. In this case, the bidder's eligibility is permanently reduced to bring the bidder into compliance with the activity rules as described in ''Maximum Eligibility and Activity Rules'' (*see* Section IV.A.ii. above). Once eligibility has been reduced, a bidder will not be permitted to regain its lost bidding eligibility.

95. Finally, a bidder may proactively use an activity rule waiver as a means to keep the auction open without placing a bid. If a bidder submits a proactive waiver (using the proactive waiver function in the FCC Automated Auction System) during a bidding period in which no bids or withdrawals are submitted, the auction will remain open and the bidder's eligibility will be preserved. However, an automatic waiver invoked in a round in which there are no new bids or withdrawals will not keep the auction open. The submission of a proactive waiver cannot occur after a bid has been submitted in a round and will preclude a bidder from placing any bids later in that round.

Note: Once a proactive waiver is submitted during a round, that waiver cannot be unsubmitted.

iv. Auction Stopping Rules

96. For Auction No. 37, the Commission will employ a simultaneous stopping rule. Under this rule, bidding will remain open on all construction permits until bidding stops on every construction permit. The auction will close for all construction permits when one round passes during which no bidder submits a proactive waiver, a withdrawal, or a new bid on any construction permit. After the first such round, bidding closes simultaneously on all construction permits.

97. The modified version of the stopping rule would close the auction for all construction permits after the first round in which no bidder submits a proactive waiver, a withdrawal, or a new bid on a construction permit when it is not the standing high bidder. Thus, absent any other bidding activity, a bidder placing a new bid on a construction permit for which it is the standing high bidder would not keep the auction open under this modified stopping rule.

98. The Bureaus retain the discretion to keep an auction open even if no new bids or proactive waivers are submitted and no previous high bids are withdrawn in a round. In this event, the effect will be the same as if a bidder had submitted a proactive waiver. Thus, the activity rule will apply as usual, and a bidder with insufficient activity will either use an activity rule waiver (if it has any left) or lose bidding eligibility.

99. The Bureaus reserve the right to declare that the auction will end after a designated number of additional rounds (''special stopping rule''). If the Bureaus invoke this special stopping rule, they will accept bids in the final round(s) only for construction permits on which the high bid increased in at least one of the preceding specified number of rounds. The Bureau may exercise this option only in circumstances such as where the auction is proceeding very slowly, where there is minimal overall bidding activity or where it appears likely that the auction will not close within a reasonable period of time. Before exercising this option, the Bureaus are likely to attempt to increase the pace of the auction by, for example, increasing the number of rounds per day, and/or adjusting the minimum acceptable bids and bid increments for the construction permits. In 2004, one commenter objected to the modified stopping rule, special stopping rule, and option to keep the auction open, supporting only the simultaneous stopping rule.

100. Auction No. 37 will begin under the simultaneous stopping rule, and the Bureaus retain the discretion to invoke the other versions of the stopping rule. We believe that these stopping rules are most appropriate for Auction No. 37, because our experience in prior auctions demonstrates that the auction stopping rules balance the interests of administrative efficiency and maximum bidder participation.

v. Auction Delay, Suspension, or Cancellation

101. By public notice or by announcement during the auction, the Bureaus may delay, suspend, or cancel the auction in the event of natural disaster, technical obstacle, evidence of an auction security breach, unlawful bidding activity, administrative or weather necessity, or for any other reason that affects the fair and competitive conduct of competitive bidding.

102. By public notice or by announcement during the auction, the Bureaus may delay, suspend, or cancel the auction in the event of natural disaster, technical obstacle, evidence of an auction security breach, unlawful bidding activity, administrative or weather necessity, or for any other reason that affects the fair and competitive conduct of competitive bidding. In such cases, the Bureaus, in their sole discretion, may elect to resume the auction starting from the beginning of the current round, resume the auction starting from some previous round, or cancel the auction in its entirety. Network interruption may cause the Bureaus to delay or suspend the auction. We emphasize that exercise of this authority is solely within the discretion of the Bureaus, and its use is not intended to be a substitute for situations in which bidders may wish to apply their activity rule waivers.

B. Bidding Procedures

i. Round Structure

103.The initial schedule of bidding rounds will be announced in the public notice listing the qualified bidders, which is released approximately 10 days before the start of the auction. Each bidding round is followed by the release of the round results. Multiple bidding rounds may be conducted in a given day. Details regarding round result formats and locations will also be included in the qualified bidders public notice.

104. The FCC has discretion to change the bidding schedule in order to foster an auction pace that reasonably balances speed with the bidders' need to study round results and adjust their bidding strategies. The Bureaus may increase or decrease the amount of time for the bidding rounds and review periods, or the number of rounds per day, depending upon the bidding activity level and other factors.

ii. Reserve Price or Minimum Opening Bid

105. The Bureaus will establish minimum opening bids for Auction No. 37, reasoning that a minimum opening bid, successfully used in other broadcast auctions, is a valuable bidding tool, effectively regulating the pace of the auction. Specifically, a minimum opening bid was proposed for each FM allotment listed in Attachment A of the *Auction No. 37 Procedures Public Notice*. The minimum opening bid was determined by taking into account various factors relating to the efficiency of the auction and the potential value of the spectrum, including the type of service and class of facility offered, market size, population covered by the proposed FM broadcast facility, industry cash flow data, and recent broadcast transactions. Based on our experience in using minimum opening bids in other auctions, we believe that minimum opening bids speed the course of the auction and ensure that valuable assets are not sold for nominal prices, without unduly interfering with the efficient awarding of construction permits.

106. We adjusted the minimum opening bids and upfront payments in the *2001 Procedures Public Notice*, to reduce the possibility of unsold construction permits and the likelihood that excessive minimum opening bid and upfront payment amounts could discourage auction participation.

107. We adopt our proposed minimum opening bids for Auction No. 37. We note that the minimum opening bids adopted here are 50 percent less than those originally proposed for this auction. Based on this reduction and the other considerations, we believe the proposed minimum opening bids are appropriate. Thus, for these reasons and those set forth in our discussion of Auction No. 37 upfront payments, we are not persuaded that the proposed minimum opening bids are unreasonable.

108. The minimum opening bids we adopt for Auction No. 37 are reducible at the discretion of the Bureaus. We emphasize, however, that such discretion will be exercised, if at all, sparingly and early in the auction, *i.e.*, before bidders lose all waivers and begin to lose substantial eligibility. During the course of the auction, the

Bureaus will not entertain any requests to reduce the minimum opening bid on specific construction permits.

109. The specific minimum opening bids for each construction permit available in Auction No. 37 are set forth in Attachment A of the *Auction No. 37 Procedures Public Notice.*

iii. Minimum Acceptable Bids and Bid Increments

110. In the *Auction No. 37 Comment Public Notice* and again in the *2004 Auction No. 37 Revised Comment Public Notice*, the Commission proposed to apply a minimum bid increment of 10 percent. We further proposed to retain the discretion to change the minimum acceptable bids and bid increments if circumstances so dictate. After receiving a comment in 2000 in support of this proposal, we adopted the proposal in the *2001 Procedures Public Notice*. Having received no further comments, we adopt this proposal here as well.

111. In each round, each eligible bidder will be able to place a bid on a particular construction permit for which it applied in any of nine different amounts. The FCC Automated Auction System will list the nine bid amounts for each construction permit.

112. Once there is a standing high bid on a construction permit, the FCC Automated Auction System will calculate a minimum acceptable bid for that construction permit for the following round, as described below. The difference between the minimum acceptable bid and the standing high bid for each construction permit will define the bid increment − *i.e.*, bid increment = (minimum acceptable bid) − (standing high bid). The nine acceptable bid amounts for each construction permit consist of the minimum acceptable bid (the standing high bid plus one bid increment) and additional amounts calculated using multiple bid increments (*i.e.*, the second bid amount equals the standing high bid plus two times the bid increment, the third bid amount equals the standing high bid plus three times the bid increment, etc.).

113. For Auction No. 37 we will use a 10 percent bid increment. This means that the minimum acceptable bid for a construction permit will be approximately 10 percent greater than the previous standing high bid received on the construction permit. The minimum acceptable bid amount will be calculated by multiplying the standing high bid times one plus the increment percentage—*i.e.*, (standing high bid) * (1.10). We will round the result using our standard rounding procedure for minimum acceptable bid calculations: results above $10,000 are rounded to the nearest $1,000; results below $10,000 but above $1,000 are rounded to the nearest $100; and results below $1,000 are rounded to the nearest $10.

114. At the start of the auction and until a bid has been placed on a construction permit, the minimum acceptable bid for that construction permit will be equal to its minimum opening bid. Corresponding additional bid amounts are calculated using bid increments defined as the difference between the minimum opening bid times one plus the percentage increment, rounded as described above, and the minimum opening bid. That is, the increment used to calculate additional bid amounts = (minimum opening bid)(1 + percentage increment){rounded} − (minimum opening bid). Therefore, when the percentage increment equals 0.1 (*i.e.*, 10%), the first additional bid amount will be approximately ten percent higher than the minimum opening bid; the second, twenty percent higher; the third, thirty percent higher; etc.

115. In the case of a construction permit for which the standing high bid has been withdrawn, the minimum acceptable bid will equal the second highest bid received for the construction permit. The additional bid amounts are calculated using the difference between the second highest bid times one plus the minimum percentage increment, rounded, and the second highest bid.

116. The Bureaus retain the discretion to change the minimum acceptable bids and bid increments and the methodology for determining the minimum acceptable bids and bid increments if they determine that circumstances so dictate. The Bureaus will do so by announcement in the FCC Automated Auction System. The Bureaus may also use their discretion to adjust the minimum bid increment without prior notice if circumstances warrant.

iv. High Bids

117. At the end of a bidding round, the high bids will be determined based on the highest gross bid amount received for each construction permit. A high bid from a previous round is sometimes referred to as a ''standing high bid.'' A ''standing high bid'' will remain the high bid until there is a higher bid on the same construction permit at the close of a subsequent round. Bidders are reminded that standing high bids are counted as activity for purposes of the activity rule.

118. The Bureaus propose to use a random number generator to select a high bid in the event of identical high bids on a construction permit in a given round (*i.e.*, tied bids). A Sybase® SQL pseudo-random number generator based on the L'Ecuyer algorithms will be used to assign a random number to each bid. The tied bid having the highest random number will become the standing high bid. The remaining bidders, as well as the high bidder, will be able to submit a higher bid in a subsequent round. If no bidder submits a higher bid in a subsequent round, the high bid from the previous round will win the construction permit. If any bids are received on the construction permit in a subsequent round, the high bid will once again be determined on the highest gross bid amount received for the construction permit.

v. Bidding

119. During a round, a bidder may submit bids for as many construction permits as it wishes (subject to its eligibility), withdraw high bids from previous bidding rounds, remove bids placed in the same bidding round, or permanently reduce eligibility. Bidders also have the option of making multiple submissions and withdrawals in each round. If a bidder submits multiple bids for a single construction permit in the same round, the system takes the last bid entered as that bidder's bid for the round. Bidders should note that the bidding units associated with construction permits for which the bidder has removed or withdrawn its bid do not count towards the bidder's activity at the close of the round.

120. Please note that all bidding will take place remotely either through the FCC Automated Auction System or by telephonic bidding. (Telephonic bid assistants are required to use a script when entering bids placed by telephone. Telephonic bidders are therefore reminded to allow sufficient time to bid by placing their calls well in advance of the close of a round. Normally, four to five minutes are necessary to complete a bid submission.) There will be no on-site bidding during Auction No. 37.

121. A bidder's ability to bid on specific construction permits in the first round of the auction is determined by two factors: (i) The construction permits applied for on FCC Form 175 and (ii) the upfront payment amount deposited. The bid submission screens will allow bidders to submit bids on only those construction permits for which the bidder applied on its FCC Form 175.

122. In order to access the bidding functions of the FCC Automated Auction System, bidders must be logged in during the bidding round using the bidder identification number provided in the registration materials, and the

password generated by the SecurID card. Bidders are strongly encouraged to print bid confirmations for each round after they have completed all of their activity for that round.

123. In each round, eligible bidders will be able to place bids on a given construction permit in any of nine different amounts. For each construction permit, the FCC Automated Auction System interface will list the nine acceptable bid amounts in a drop-down box. Bidders may use the drop-down box to select from among the nine bid amounts. The FCC Automated Auction System also includes an import function that allows bidders to upload text files containing bid information and a Type Bids function that allows bidders to enter specific construction permits for filtering.

124. Until a bid has been placed on a construction permit, the minimum acceptable bid for that construction permit will be equal to its minimum opening bid. Once there is a standing high bid on a construction permit, the FCC Automated Auction System will calculate a minimum acceptable bid for that construction permit for the following round, as described in section IV.B.iii.

125. Finally, bidders are cautioned to select their bid amounts carefully because, as explained in the following section, bidders that withdraw a standing high bid from a previous round, even if the bid was mistakenly or erroneously made, are subject to bid withdrawal payments.

vi. Bid Removal and Bid Withdrawal

126. For Auction No. 37 the Commission adopts bid removal and bid withdrawal procedures. With respect to bid withdrawals, the Commission will limit each bidder to withdrawals in no more than two rounds during the course of the auction. The two rounds in which withdrawals are used would be at the bidder's discretion.

127. Procedures. Before the close of a bidding round, a bidder has the option of removing any bids placed in that round. By using the ''remove bid'' function in the bidding system, a bidder may effectively ''unsubmit'' any bid placed within that round. A bidder removing a bid placed in the same round is not subject to withdrawal payments. Removing a bid will affect a bidder's activity for the round in which it is removed, *i.e.*, a bid that is removed does not count towards bidding activity. These procedures will enhance bidder flexibility during the auction.

128. Once a round closes, a bidder may no longer remove a bid. However, in later rounds, a bidder may withdraw standing high bids from previous rounds using the withdraw bid function in the FCC Automated Auction System (assuming that the bidder has not reached its withdrawal limit). A high bidder that withdraws its standing high bid from a previous round during the auction is subject to the bid withdrawal payments specified in 47 CFR 1.2104(g). Note: Once a withdrawal is submitted during a round, that withdrawal cannot be unsubmitted.

129. In previous auctions, the Bureau has detected bidder conduct that, arguably, may have constituted strategic bidding through the use of bid withdrawals. While the Bureau continues to recognize the important role that bid withdrawals play in an auction, *i.e.*, reducing risk associated with efforts to secure various construction permits in combination, we conclude that, for Auction No. 37, adoption of a limit on the use of withdrawals to two rounds per bidder is appropriate. By doing so we believe we strike a reasonable compromise that will allow bidders to use withdrawals. Our decision on this issue is based upon our experience in prior auctions, particularly the PCS D, E and F block auctions, and 800 MHz SMR auction, and is in no way a reflection of our view regarding the likelihood of any speculation or ''gaming'' in this auction.

130. The Bureaus will therefore limit the number of rounds in which bidders may place withdrawals to two rounds. These rounds will be at the bidder's discretion and there will be no limit on the number of bids that may be withdrawn in either of the rounds. Withdrawals during the auction will be subject to the bid withdrawal payments specified in 47 CFR 1.2104(g). Bidders should note that abuse of the Commission's bid withdrawal procedures could result in the denial of the ability to bid on a construction permit.

131. If a high bid is withdrawn, the minimum acceptable bid will equal the second highest bid received for the construction permit, which may be less than, or equal to, in the case of tied bids, the amount of the withdrawn bid. The Bureau retain the discretion to lower the minimum acceptable bid on such construction permits in the next round or in later rounds. To set the additional bid amounts, the second highest bid also will be used in place of the standing high bid in the formula used to calculate bid increments. The Commission will serve as a ''place holder'' high bidder on the construction permit until a new bid is submitted on that construction permit.

132. *Calculation.* Generally, the Commission imposes payments on bidders that withdraw high bids during the course of an auction. If a bidder withdraws its bid and there is no higher bid in the same or subsequent auction(s), the bidder that withdrew its bid is responsible for the difference between its withdrawn bid and the high bid in the same or subsequent auction(s). In the case of multiple bid withdrawals on a single construction permit, within the same or subsequent auctions(s), the payment for each bid withdrawal will be calculated based on the sequence of bid withdrawals and the amounts withdrawn. No withdrawal payment will be assessed for a withdrawn bid if either the subsequent winning bid or any of the intervening subsequent withdrawn bids, in either the same or subsequent auctions(s), equals or exceeds that withdrawn bid. Thus, a bidder that withdraws a bid will not be responsible for any withdrawal payments if there is a subsequent higher bid in the same or subsequent auction(s). This policy allows bidders most efficiently to allocate their resources as well as to evaluate their bidding strategies and business plans during an auction while, at the same time, maintaining the integrity of the auction process. The Bureaus retain the discretion to scrutinize multiple bid withdrawals on a single construction permit for evidence of anti-competitive strategic behavior and take appropriate action when deemed necessary.

133. Section 1.2104(g)(1) of the Commission's rules provides that in instances in which bids have been withdrawn on a construction permit that is not won in the same auction, the Commission will assess an interim withdrawal payment equal to 3 percent of the amount of the withdrawn bids. The 3 percent interim payment will be applied toward any final bid withdrawal payment that will be assessed after subsequent auction of the construction permit. Assessing an interim bid withdrawal payment ensures that the Commission receives a minimal withdrawal payment pending assessment of any final withdrawal payment. The *Part 1 Fifth Report and Order* provides specific examples showing application of the bid withdrawal payment rule.

vii. Round Results

134. Bids placed during a round will not be made public until the conclusion of that bidding period. After a round closes, the Bureaus will compile reports of all bids placed, bids withdrawn, current high bids, new minimum accepted bids, and bidder eligibility

status (bidding eligibility and activity rule waivers), and post the reports for public access. Reports reflecting bidders' identities for Auction No. 37 will be available before and during the auction. Thus, bidders will know in advance of this auction the identities of the bidders against which they are bidding.

viii. Auction Announcements

135. The FCC will use auction announcements to announce items such as schedule changes. All FCC auction announcements will be available by clicking a link on the FCC Automated Auction System.

V. Post-Auction Procedures

A. Down Payments and Withdrawn Bid Payments

136. After bidding has ended, the Commission will issue a public notice declaring the auction closed and identifying winning bidders, down payments and any withdrawn bid payments due.

137. Within ten business days after release of the auction closing notice, each winning bidder must submit sufficient funds (in addition to its upfront payment) to bring its total amount of money on deposit with the Commission for Auction No. 37 to 20 percent of the net amount of its winning bids (gross bids less any applicable new entrant bidding credits). In addition, by the same deadline all bidders must pay any bid withdrawal payments due under 47 CFR 1.2104(g), as discussed in ''Bid Removal and Bid Withdrawal,'' Part IV.B.vi. (Upfront payments are applied first to satisfy any withdrawn bid liability, before being applied toward down payments.)

B. Final Payments

138. After the termination of the pleading cycle for petitions to deny, the Commission will issue a public notice announcing that it is prepared to award the construction permits to the winning bidders, if the applications are uncontested. Within ten business days after the date of that public notice, the uncontested winning bidders will be required to make full payment of the balance of their winning bids. Broadcast construction permits will be granted only after the full and timely payment of winning bids and any applicable late fees, in accordance with § 1.2109(a). The previously filed long-form applications of the unsuccessful competing bidders will be dismissed following the grant of the winning bidder's construction permit.

139. WTB now employs a final payment deadline different from that described above. Consistent with current WTB practice, for Auction No. 37, the Bureaus are considering rule changes to conform §§ 73.3573(f)(5)(ii) and 73.5006(d) to analogous Part 1 auction rules. If adopted, each winning bidder would be required to submit the balance of the net amount of its winning bids within 10 business days after the deadline for submitting down payments.

C. Long-Form Application

140. Within thirty days after the release of the auction closing notice, winning bidders must electronically submit a properly completed Form 301, Application for FM Construction Permit, and required exhibits for each construction permit won through Auction No. 37. Further filing instructions will be provided to auction winners at the close of the auction.

D. Default and Disqualification

141. Any high bidder that defaults or is disqualified after the close of the auction (*i.e.*, fails to remit the required down payment within the prescribed period of time, fails to submit a timely long-form application, fails to make full payment, or is otherwise disqualified) will be subject to the payments described in 47 CFR 1.2104(g)(2). In such event the Commission may re-auction the construction permit or offer it to the next highest bidder (in descending order) at its final bid. In addition, if a default or disqualification involves gross misconduct, misrepresentation, or bad faith by an applicant, the Commission may declare the applicant and its principals ineligible to bid in future auctions, and may take any other action that it deems necessary, including institution of proceedings to revoke any existing licenses or construction permits held by the applicant.

E. Refund of Remaining Upfront Payment Balance

142. All applicants that submit upfront payments but are not winning bidders for a construction permit in Auction No. 37 may be entitled to a refund of their remaining upfront payment balance after the conclusion of the auction. No refund will be made unless there are excess funds on deposit from the applicant after any applicable bid withdrawal payments have been paid. All refunds will be returned to the payer of record, as identified on the FCC Form 159, unless the payer submits written authorization instructing otherwise.

143. Bidders that drop out of the auction completely may be eligible for a refund of their upfront payments before the close of the auction. Qualified bidders that have exhausted all of their activity rule waivers, have no remaining bidding eligibility, and have not withdrawn a high bid during the auction must submit a written refund request. If you have completed the refund instructions electronically, then only a written request for the refund is necessary. If not, the request must also include wire transfer instructions, Taxpayer Identification Number (''TIN'') and FCC Registration Number (''FRN''). Send refund request to Federal Communications Commission, Financial Operations Center, Auctions Accounting Group, Gail Glasser, 445 12th Street, SW., Room 1–C864, Washington, DC 20554.

144. Bidders are encouraged to file their refund information electronically using the refund information portion of the FCC Form 175, but bidders can also fax their information to the Auctions Accounting Group at (202) 418–2843. Once the information has been approved, a refund will be sent to the party identified in the refund information.

Note: Refund processing generally takes up to two weeks to complete. Bidders with questions about refunds should contact Gail Glasser at (202) 418–0578.

Federal Communications Commission.

Margaret Wiener,

Chief, Auctions and Spectrum Access Division, WTB.

[FR Doc. 04–16221 Filed 7–15–04; 8:45 am]

BILLING CODE 6712–01–P

FEDERAL RESERVE SYSTEM

Agency Information Collection Activities: Announcement of Board Approval Under Delegated Authority and Submission to OMB

AGENCY: Board of Governors of the Federal Reserve System

SUMMARY: Background. Notice is hereby given of the final approval of proposed information collection by the Board of Governors of the Federal Reserve System (Board) under OMB delegated authority, as per 5 CFR 1320.16 (OMB Regulations on Controlling Paperwork Burdens on the Public). Board–approved collections of information are incorporated into the official OMB inventory of currently approved collections of information. Copies of the OMB 83–Is and supporting statements and approved collection of information instrument(s) are placed into OMB's public docket files. The Federal Reserve may not conduct or sponsor, and the respondent is not required to respond

to, an information collection that has been extended, revised, or implemented on or after October 1, 1995, unless it displays a currently valid OMB control number.

FOR FURTHER INFORMATION CONTACT: Federal Reserve Clearance Officer–Cindy Ayouch—Division of Research and Statistics, Board of Governors of the Federal Reserve System, Washington, DC 20551 (202–452–3829)

OMB Desk Officer–Mark Menchik—Office of Information and Regulatory Affairs, Office of Management and Budget, New Executive Office Building, Room 10235, Washington, DC 20503

SUPPLEMENTARY INFORMATION:

Final approval under OMB delegated authority of the extension for three years, without revision of the following report:

Report title: Investment in Bank Premises Notification

Agency form number: FR 4014

OMB Control number: 7100–0139

Frequency: On occasion

Reporters: State member banks

Annual reporting hours: 3

Estimated average hours per response: 5 minutes

Number of respondents: 6

General description of report: This information collection is mandatory (12 U.S.C. 371d) and is not given confidential treatment.

Abstract: The Federal Reserve System requires a state member bank to file a notification whenever it proposes to make an investment in bank premises that results in its total bank premises investment exceeding its capital stock and surplus or, if the bank is well capitalized and in good condition, exceeding 150 percent of its capital stock and surplus. There is no formal reporting form; banks notify the Federal Reserve by letter fifteen days prior to making the proposed investment. The Federal Reserve uses the information to fulfill its statutory obligation to supervise state member banks.

Board of Governors of the Federal Reserve System, July 12, 2004.

Jennifer J. Johnson

Secretary of the Board.

[FR Doc. 04–16164 Filed 7–15–04; 8:45 am]

BILLING CODE 6210–01–S

DEPARTMENT OF HEALTH AND HUMAN SERVICES AND

DEPARTMENT OF AGRICULTURE

Announcement of Fifth Meeting of 2005 Dietary Guidelines Advisory Committee

AGENCIES: U.S. Department of Health and Human Services (HHS), Office of Public Health and Science; and U.S. Department of Agriculture (USDA), Food, Nutrition and Consumer Services and Research, Education and Economics.

ACTION: Notice.

SUMMARY: The U.S. Department of Health and Human Services and the U.S. Department of Agriculture provide notice of the final meeting of the Committee.

DATES: The Committee will meet on August 11, 2004, 7:30 a.m. to 5:30 p.m.

ADDRESSES: The meeting will be held at the Omni Shoreham, located at 2500 Calvert Street, NW., Washington, DC 20008, in the Palladian Room. The closest metro station to the meeting location is Woodley Park-Zoo/Adams Morgan station. Limited parking is available at the hotel.

FOR FURTHER INFORMATION CONTACT: HHS Co-Executive Secretary: Kathryn McMurry (phone 202–690–7102), HHS Office of Disease Prevention and Health Promotion, Office of Public Health and Science, Room 738–G, 200 Independence Ave., SW., Washington, DC 20201. USDA Co-Executive Secretaries: Carole Davis (phone 703–305–7600), USDA Center for Nutrition Policy and Promotion, 3101 Park Center Drive, Room 1034, Alexandria, Virginia 22302, or Pamela Pehrsson (phone 301–504–0716), USDA Agricultural Research Service, Beltsville Agricultural Research Center-West, Building 005, Room 309A, Beltsville, Maryland 20705. Additional information is available on the Internet at *http://www.health.gov/dietaryguidelines.*

SUPPLEMENTARY INFORMATION:

Dietary Guidelines Advisory Committee: The thirteen-member Committee appointed by the two Departments is chaired by Janet King, Ph.D., R.D., Children's Hospital Oakland Research Institute, Oakland, California. Other members are Lawrence J. Appel, M.D., M.P.H., Johns Hopkins Medical Institutions, Baltimore, Maryland; Yvonne L. Bronner, Sc.D., R.D., L.D., Morgan State University, Baltimore, Maryland; Benjamin Caballero, M.D., Ph.D., Johns Hopkins University Bloomberg School of Public Health, Baltimore, Maryland; Carlos A. Camargo, M.D., Dr.P.H., Harvard University, Boston, Massachusetts; Fergus M. Clydesdale, Ph.D., University of Massachusetts, Amherst, Amherst, Massachusetts; Vay Liang W. Go, M.D., University of California at Los Angeles, Los Angeles, California; Penny M. Kris-Etherton, Ph.D., R.D., Pennsylvania State University, University Park, Pennsylvania; Joanne R. Lupton, Ph.D., Texas A&M University, College Station, Texas; Theresa A. Nicklas, Dr.P.H., M.P.H., L.N., Baylor College of Medicine, Houston, Texas; Russell R. Pate, Ph.D., University of South Carolina, Columbia, South Carolina; F. Xavier Pi-Sunyer, M.D., M.P.H., Columbia University College of Physicians and Surgeons, New York, New York; and Connie M. Weaver, Ph.D., Purdue University, West Lafayette, Indiana.

Purpose of Meeting: The appointment of the Committee reflects the commitment by HHS and USDA to provide sound and current dietary guidance to consumers. The National Nutrition Monitoring and Related Research Act of 1990 (Pub. L. 101–445, Title III) requires the Secretaries of HHS and USDA to publish the Dietary Guidelines for Americans at least every five years. During its first meeting, the Dietary Guidelines Advisory Committee decided the science has changed since the 2000 edition of Nutrition and Your Health: Dietary Guidelines for Americans and further evaluation of the science was necessary. Therefore, it has conducted a review of current scientific and medical knowledge and will provide a technical report of any recommendations to the Secretaries for the 2005 edition. The agenda will include review and discussion of the Committee's draft report.

Public Participation at Meeting: The meeting is open to the public. Because space is limited, pre-registration is requested. To pre-register, please e-mail *dietaryguidelines@osophs.dhhs.gov*, with ''Meeting Registration'' in the subject line or call MaurLo Baxter at (202) 260–2322 by 5 p.m. E.D.T., August 4, 2004. Registration must include your name, affiliation, and phone number. Visitors must bring proper identification to attend the meeting. If you require a sign language interpreter, please call MaurLo Baxter at (202) 260–2322 by July 28, 2004. Documents pertaining to Committee deliberations for the final meeting, including the draft report, will be available for public inspection and copying in Room 738–G, 200 Independence Avenue, SW., Washington, DC, beginning the day before the meeting. All official

documents are available for viewing by appointment for the duration of the Committee's term, which terminates after delivery of its final report to the Secretaries. Please call (202) 690–7102 to schedule an appointment to view the documents.

Dated: July 9, 2004.

Penelope S. Royall,

Deputy Assistant Secretary for Health (Disease Prevention and Health Promotion), Department of Health and Human Services.

Dated: July 9, 2004.

Eric J. Hentges,

Executive Director, Center for Nutrition Policy and Promotion, Department of Agriculture.

Dated: July 9, 2004

Caird E. Rexroad Jr.,

Acting Associate Administrator, Agricultural Research Service, Department of Agriculture.

[FR Doc. 04–16131 Filed 7–15–04; 8:45 am]

BILLING CODE 4150–32–P

DEPARTMENT OF HEALTH AND HUMAN SERVICES

Centers for Disease Control and Prevention

[Program Announcement 04275]

Expansion of HIV/AIDS, STD and TB Laboratory Activities at the Namibia Institute of Pathology (NIP) in the Republic of Namibia; Notice of Intent To Fund Single Eligibility Award

A. Purpose

The Centers for Disease Control and Prevention (CDC) announces the intent to fund fiscal year (FY) 2004 funds for a cooperative agreement program to improve national surveillance for HIV infection, sexually transmitted diseases (STDs), and Tuburculosis (TB); and the capacity of the Namibia Institute of Pathology (NIP) to provide services for diagnosing these diseases and others related to HIV infection and transmission in Namibia. The Catalog of Federal Domestic Assistance number for this program is 93.941.

B. Eligible Applicant

Assistance will be provided only to the Namibia Institute of Pathology.

The NIP is the only organization in Namibia qualified to collaborate with the Global AIDS Program (GAP) of CDC-Namibia because it has the legal authority, expertise and capacity to perform the key public health role of monitoring communicable diseases, such as AIDS, STD and TB. NIP has been charged by the Ministry of Health and Social Services (MOHSS) to serve as the national reference laboratory for HIV, STD and TB, and to develop, implement and evaluate laboratory diagnostic and quality assurance activities related to these diseases. NIP has mechanisms in place to access information for, and the scientific expertise to apply these factors to, the development of laboratory capacity at the national and regional levels that will assist the government in its HIV, STD, and TB prevention programs. The major purpose of this announcement is to build upon the existing public health laboratory framework in Namibia. No other institution in the country has the capacity, legal mandate and expertise to accomplish this task.

C. Funding

Approximately $1,200,000 is available in FY 2004 to fund this award. It is expected that the award will begin on or before September 1, 2004 and will be made for a 12-month budget period within a project period of up to five years. Funding estimates may change.

D. Where To Obtain Additional Information

For general comments or questions about this announcement, contact: Technical Information Management, CDC Procurement and Grants Office, 2920 Brandywine Road, Atlanta, GA 30341–4146, Telephone: (770) 488–2700.

For technical questions about this program, contact: Dr. Tom Kenyon, Project Officer, Global AIDS Program (GAP), c/o U.S. Embassy Windhoek, 2540 Windhoek Place, Washington, DC 20521, Telephone: 264 61 203 2271, Fax number: 264 61 226 959, E-mail: *TKenyon@cdc.gov.*

Dated: July 12, 2004.

William P. Nichols,

Acting Director, Procurement and Grants Office, Centers for Disease Control and Prevention.

[FR Doc. 04–16169 Filed 7–15–04; 8:45 am]

BILLING CODE 4163–18–P

DEPARTMENT OF HEALTH AND HUMAN SERVICES

Centers for Disease Control and Prevention

[Program Announcement 04106]

Development of Influenza Surveillance Networks Amendment

A notice announcing the availability of fiscal year (FY2004 funds for a cooperative agreement entitled, ''Development of Influenza Surveillance Networks'' was published in the **Federal Register** Tuesday, April 27, 2004, Volume 69, Number 81, pages 22806–22810. The notice is amended as follows:

On page 22806, column one, after ''Application Deadline': Please change the application deadline from June 28, 2004 to July 13, 2004. Also, on page 22808, column three, under section ''IV.3. Submission Dates and Times'', after ''Application Deadline Date'', please change the application deadline date from June 28, 2004 to July 13, 2004.

Dated: July 8, 2004.

Alan A. Kotch,

Acting Director, Procurement and Grants Office, Centers for Disease Control and Prevention.

[FR Doc. 04–16170 Filed 7–15–04; 8:45 am]

BILLING CODE 4163–18–P

DEPARTMENT OF HEALTH AND HUMAN SERVICES

Centers for Disease Control and Prevention

Disease, Disability, and Injury Prevention and Control Special Emphasis Panel (SEP): Study Effect of West Nile Virus Infections on Outcomes of Pregnancy in Humans, Program Announcement 04213

In accordance with Section 10(a)(2) of the Federal Advisory Committee Act (Pub. L. 92–463), the Centers for Disease Control and Prevention (CDC) announces the following meeting:

Name: Disease, Disability, and Injury Prevention and Control Special Emphasis Panel (SEP): Study Effect of West Nile Virus Infections on Outcomes of Pregnancy in Humans, Program Announcement 04213.

Times and Dates: 10:30 a.m.—11:10 a.m., August 10, 2004 (Open); 11:30 a.m.—2:30 p.m., August 10, 2004 (Closed).

Place: Teleconference number (404) 498–4115.

Status: Portions of the meeting will be closed to the public in accordance with provisions set forth in Section 552b(c) (4) and (6), Title 5 U.S.C., and the Determination of the Director, Management Analysis and Services Office, CDC, pursuant to Public Law 92–463.

Matters To Be Discussed: The meeting will include the review, discussion, and evaluation of applications received in response to: Study Effect of West Nile Virus Infections on Outcomes of Pregnancy in Humans, Program Announcement 04213.

Contact Person for More Information: Esther Sumartojo, PhD, MSc, Acting Associate Director for Science and Public Health, National Center on Birth Defects and Developmental Disabilities, CDC, 1600 Clifton Road, Mailstop E–87, Atlanta, GA 30333, telephone 404–498–3072.

The Director, Management Analysis and Services Office, has been delegated the authority to sign **Federal Register** notices

pertaining to announcements of meetings and other committee management activities, for both the CDC and the Agency for Toxic Substances and Disease Registry.

Dated: July 9, 2004.

Alvin Hall,

Director, Management Analysis and Services Office, Centers for Disease Control and Prevention (CDC).

[FR Doc. 04–16168 Filed 7–15–04; 8:45 am]

BILLING CODE 4163–18–P

DEPARTMENT OF HEALTH AND HUMAN SERVICES

Centers for Medicare and Medicaid Services

[Document Identifier: CMS–379, CMS–116, and CMS–R–215]

Agency Information Collection Activities: Submission for OMB Review; Comment Request

AGENCY: Centers for Medicare and Medicaid Services, HHS.

In compliance with the requirement of section 3506(c)(2)(A) of the Paperwork Reduction Act of 1995, the Centers for Medicare and Medicaid Services (CMS) (formerly known as the Health Care Financing Administration (HCFA), Department of Health and Human Services, is publishing the following summary of proposed collections for public comment. Interested persons are invited to send comments regarding this burden estimate or any other aspect of this collection of information, including any of the following subjects: (1) The necessity and utility of the proposed information collection for the proper performance of the agency's functions; (2) the accuracy of the estimated burden; (3) ways to enhance the quality, utility, and clarity of the information to be collected; and (4) the use of automated collection techniques or other forms of information technology to minimize the information collection burden.

1. *Type of Information Collection Request:* Extension of a currently approved collection; *Title of Information Collection:* The Financial Statement of Debtor and Supporting Regulations in 42 CF Section 405.376; *Form No.:* CMS–379 (OMB# 0938–0270); *Use:* This form is used to collect financial information which is needed to evaluate requests from physicians/suppliers to pay indebtedness under an extended repayment schedule, or to compromise a debt less than the full amount; *Frequency:* Other: as needed; *Affected Public:* Business or other for-profit, individuals or households; *Number of Respondents:* 500; *Total Annual Responses:* 500; *Total Annual Hours:* 1,000.

2. *Type of Information Collection Request:* Extension of a currently approved collection; *Title of Information Collection:* Clinical Laboratory Improvement Amendments Application Form and Supporting Regulations in 42 CFR 493.1–.2001; *Form No.:* CMS–116 (OMB# 0938–0581); *Use:* Clinical Laboratory Certification—The application must be completed by entities performing laboratory testing on human specimens for diagnostic or treatment purposes. This information is vital to the certification process.; *Frequency:* Bi-annually; *Affected Public:* Business or other for-profit, not-for-profit institutions, Federal Government, and State, Local, or Tribal Government; *Number of Respondents:* 16,000; *Total Annual Responses:* 16,000; *Total Annual Hours:* 20,000.

3. *Type of Information Collection Request:* Extension of a currently approved collection; *Title of Information Collection:* Information Collection Requirements Referenced in 42 CFR 424.57; Additional DMEPOS Supplier Standards; *Form No.:* CMS–R–215 (OMB# 0938–0717); *Use:* Respondents will be suppliers of Durable Medicare Equipment, Prosthetics, Orthotics, and Supplies (DMEPOS). CMS needs documentation that the DMEPOS supplier has advised beneficiaries that they may either rent or purchase inexpensive or routinely purchased equipment and about the purchase option for capped rental equipment. This is needed to determine if the supplier has met the supplier standards.; *Frequency:* On Occasion and Annually; *Affected Public:* Business or other for-profit and not-for-profit institutions; *Number of Respondents:* 63,986; *Total Annual Responses:* 35,000; *Total Annual Hours:* 280,000.

To obtain copies of the supporting statement and any related forms for the proposed paperwork collections referenced above, access CMS Web Site address at *http://www.cms.hhs.gov/regulations/pra/,* or E-mail your request, including your address, phone number, OMB number, and CMS document identifier, to *Paperwork@hcfa.gov*, or call the Reports Clearance Office on (410) 786–1326. Written comments and recommendations for the proposed information collections must be mailed within 30 days of this notice directly to the OMB desk officer: OMB Human Resources and Housing Branch, Attention: Christopher Martin, New Executive Office Building, Room 10235, Washington, DC 20503.

Dated: July 2, 2004.

John P. Burke, III,

Paperwork Reduction Act Team Leader, CMS Reports Clearance Officer, Office of Strategic Operations and Regulatory Affairs, Division of Regulations Development and Issuances.

[FR Doc. 04–15814 Filed 7–15–04; 8:45 am]

BILLING CODE 4120–03–P

DEPARTMENT OF HEALTH AND HUMAN SERVICES

Office of Inspector General

Program Exclusions: June 2004

AGENCY: Office of Inspector General, HHS.

ACTION: Notice of program exclusions.

During the month of June 2004, the HHS Office of Inspector General imposed exclusions in the cases set forth below. When an exclusions is imposed, no program payment is made to anyone for any items or services (other than an emergency item or service not provided in a hospital emergency room) furnished, ordered or prescribed by an excluded party under the Medicare, Medicaid, and all Federal Health Care programs. In addition, no program payment is made to any business or facility, *e.g.*, a hospital, that submits bills for payment for items or services provided by an excluded party. Program beneficiaries remain free to decide for themselves whether they will continue to use the services of an excluded party even though no program payments will be made for items and services provided by that excluded party. The exclusions have national effect and also apply to all Executive Branch procurement and non-procurement programs and activities.

Subject name	Address	Effective date
Program-Related Convictions:		
A Dental Center, P C—Southgate	W Bloomfield, MI	7/20/2004
Abdi, Izhar	Brooklyn, NY	7/20/2004
Aberdeen Ambulance Service, Inc	Aberdeen, SD	8/16/1999

Subject name	Address	Effective date
Alexander, Lora	Dayton, OH	7/20/2004
Anderegg, Nicole	Chandler, AZ	7/20/2004
Arreola, Stephanie	Buena Park, CA	7/20/2004
Babcock, Robert	Lake Havasu, AZ	3/24/2004
Baburov, Edward	Long Beach, CA	7/20/2004
Bacca, Toni	Urbana, OH	7/20/2004
Baker, Arlene	Scottsdale, AZ	1/28/2004
Benisatto, Salvatore	Farmington Hills, MI	7/20/2004
Birt, Angela	Inglewood, CA	3/24/2004
Black, Jacqueline	Columbus, OH	7/20/2004
Blankenship, Mary	Kendrick, ID	7/20/2004
Bombalier, Lazaro	Miami, FL	7/20/2004
Camey Arriaza, Ana	Compton, CA	7/20/2004
Carmona, Sergio	Ft Myers, FL	7/20/2004
Chandler, Bobbi	Columbus, OH	7/20/2004
Chavez, Baudelio	Fallbrook, CA	7/20/2004
Chavis, Shana	Whitehall, OH	7/20/2004
Chavis, Sherri	Columbus, OH	7/20/2004
Cohn, Frederick	Anthony, TX	7/20/2004
Daniels, Juakita	Greenville, NC	7/20/2004
Davis, Brenda	Utica, MS	7/20/2004
Dilone, Guillermo	Elmhurst, NY	7/20/2004
Eaton Manor Nursing Home	Charlotte, MI	7/20/2004
Elasha, Rahamtalla	Elkton, OH	7/20/2004
Gallego, Raynaldo	Culver City, CA	7/20/2004
Garcia, Pablo	Hialeah, FL	7/20/2004
Guevara, Saul	Cincinnati, OH	7/20/2004
Hall, Carter	Rapid City, SD	8/16/1999
Johnson, Warren	Laie, HI	7/20/2004
Kovarskaya, Galina	New York, NY	7/20/2004
Kusmierz, Therese	Albion, NY	7/20/2004
Lassiter, Rhonda	Scotland Neck, NC	7/20/2004
Latreille, Gerry	Mesa, AZ	7/20/2004
Latscha, Lisa	Cincinnati, OH	7/20/2004
Levine, Stewart	Huntingdon Valley, PA	7/20/2004
Longazel, Mark	Cleveland, OH	7/20/2004
Lopez, Bernabe	Petaluma, CA	7/20/2004
Makseredzhyan, Hakop	Taft, CA	7/20/2004
Mallett, Clinton	Milwaukee, WI	7/20/2004
Martin, Cherol	Youngstown, OH	7/20/2004
Modi, Rita	Powhatan, VA	7/20/2004
Morales, Christine	Homestead, FL	7/20/2004
Morales, Cristino	Bridgeton, NJ	7/20/2004
Morales, Eduardo	Homestead, FL	7/20/2004
Mote, Penny	Jacksonville, FL	7/20/2004
Munoz, Ines	Santa Rosa, CA	7/20/2004
Nuffer, David	Salt Lake City, UT	7/20/2004
Odems, Mary	Rolling Fork, MS	7/20/2004
Parikh, Manuprasad	Franklin Lakes, NJ	7/20/2004
Paterson, Heidi	Lake Havasu City, AZ	3/24/2004
Pina, Carmen	Fresno, CA	7/20/2004
Pogosyan, Vardan	Long Beach, CA	7/20/2004
Pugliese, William	Canyon Country, CA	7/20/2004
Reyes Reymundo, Rosa	Upland, CA	7/20/2004
Rivera, Claudia	Phoenix, AZ	7/20/2004
Romano, Javier	Miami, FL	7/20/2004
Rosen, Eric	Fairton, NJ	7/20/2004
Schierholz, Genell	Carriere, MS	7/20/2004
Sebastain, Mary	Los Angeles, CA	7/20/2004
Terwedo, Randal	Shingle Springs, CA	7/20/2004
Texiera, Patricia	Lowell, MA	7/20/2004
Urgo, Joseph	Yonkers, NY	7/20/2004
Vikramjit S Anand, DDS, PC	Ithaca, NY	7/20/2004
Villarreal, Daniel	Los Angeles, CA	7/20/2004
Walker, Wallace	Detroit, MI	7/20/2004
Watkins, Becky	Carriere, MS	7/20/2004
Wheat, Tanya	Columbus, OH	7/20/2004
Xiques, Yenissel	Miami, FL	7/20/2004
Xpress Ambulette Service, Inc	Mount Vernon, NY	7/20/2004
Yahiayan, Krikor	Lompoc, CA	7/20/2004
Yunatanov, Steve	Kew Gardens, NY	7/20/2004
Zlotin, Igor	Flushing, NY	7/20/2004
Felony Conviction for Health Care Fraud:		

Subject name	Address	Effective date
Behr, Kenneth	South Bend, IN	7/20/2004
Cano, Juan	Commerce, CA	7/20/2004
Couch, Joanne	Valparaiso, IN	7/20/2004
Crooks, Michelle	Osage, WV	7/20/2004
Fraire, Bobbie	Mesa, AZ	7/20/2004
Howell, Bessie	Chicago, IL	7/20/2004
Jones, John	Midland, MI	7/20/2004
Koningh, John	Newport Beach, CA	7/20/2004
La Gorce, Jean Marie	San Clamente, CA	7/20/2004
Lam, Tony	Diamond Bar, CA	7/20/2004
Workman, Petrinia	Tacoma, WA	7/20/2004
Wylie, John	Malvern, PA	7/20/2004
Felony Control Substance Conviction:		
Ford, Sherry	Medford, OR	7/20/2004
Fox, Robert	Seward, AK	7/20/2004
Grimm, Kimberly	Stow, OH	7/20/2004
Levitt, Gerald	Pittsburgh, PA	7/20/2004
Nosal, Leonard	White Lake, MI	7/20/2004
Ross, Josie	Hackensack, NJ	7/20/2004
Ruth, Jerald	Graham, WA	7/20/2004
Sherron, Laurie	Wilmington, NC	7/20/2004
Worrell, Bruce	Cincinnati, OH	7/20/2004
Patient Abuse/Neglect Convictions:		
Brown-Stokes, Gladys	Milwaukee, WI	7/20/2004
Colyer, Gerald	Salem, OR	7/20/2004
Cue, Betty	Green Cove Springs, FL	7/20/2004
Duncan, Dare	Marysville, OH	7/20/2004
Fischer, Edwardo	Raiford, FL	7/20/2004
Ho, Melvin	Wahiawa, HI	7/20/2004
Isaac, Ashley	Darlington, SC	7/20/2004
Jones, Tiletta	Cleveland, OH	7/20/2004
Keith, Natasha	Columbus, OH	7/20/2004
LaValley, Eric	Northwood, NH	7/20/2004
Litton, Larry	Bristol, TN	7/20/2004
Liviu, Stefan	Ontario, OR	7/20/2004
Margiono, Budhi	Kirkland, WA	7/20/2004
Mays-Cargo, Lizastarlene	Kapolei, HI	7/20/2004
Nethercott, Christian	Portland, OR	7/20/2004
Parks, George	Virginia, MN	7/20/2004
Reed, Linda	Hodges, SC	7/20/2004
Sabado, Remedios	Honolulu, HI	7/20/2004
Tucker, Barbara	Idabel, OK	7/20/2004
Utter, Michiko	Cedarville, CA	7/20/2004
Conviction for Health Care Fraud:		
Bond, Janet	Taylorsville, MS	7/20/2004
Dempsey, Ruth	Tucson, AZ	7/20/2004
Kelly, Felicia	Minneapolis, MN	7/20/2004
Sixkiller, Linda	Oklahoma City, OK	7/20/2004
Conviction-Obstruction of an Investigation:		
Raynor, Rhett	Dunn, NC	7/20/2004
Controlled Substance Convictions:		
Hancock, John	Mooresburgh, TN	7/20/2004
License Revocation/Suspension/Surrendered:		
Adkins, Erik	Kent, WA	7/20/2004
Agundez, Jakee	Henderson, NV	7/20/2004
Allison, Jean	Tucson, AZ	7/20/2004
Alvarez, Adrian	Corona, CA	7/20/2004
American Horse, Caroline	Parker, AZ	7/20/2004
Andrews, Lorenzo	Greenbelt, MD	7/20/2004
Arora, Martha	Prospect, KY	7/20/2004
Aubrey, Tondalaya	Long Beach, CA	7/20/2004
Austin, Brandy	Terre Haute, IN	7/20/2004
Austin, Pamela	Ben Lomond, CA	7/20/2004
Baker, Jay	Virginia Beach, VA	7/20/2004
Bank, John	Las Vegas, NV	7/20/2004
Barratt, Elizabeth	Brooklyn, NY	7/20/2004
Barrett, Kimberly	Hamilton, OH	7/20/2004
Barrows, Barbara	Arlington, WA	7/20/2004
Basil, Patricia	Bardstown, KY	7/20/2004
Bautista, Candelario	Phoenix, AZ	7/20/2004
Beach, Karen	Lancaster, PA	7/20/2004
Bear, Nathan	Salunga, PA	7/20/2004
Bedford, Christine	Clive, IA	7/20/2004

Subject name	Address	Effective date
Bello, Blasida	Boyes Hot Springs, CA	7/20/2004
Beltran, Ricardo	Hacienda Heights, CA	7/20/2004
Birdsong, Michael	Cordova, TN	7/20/2004
Boucher, Victor	Scottsdale, AZ	7/20/2004
Brady, Guy	Clearfield, UT	7/20/2004
Broughton-Nagy, Michelle	Tucson, AZ	7/20/2004
Brown, Arnette	Phoenix, AZ	7/20/2004
Browne, Allen	Mesa, AZ	7/20/2004
Buchfink, Kyle	Inola, OK	7/20/2004
Buehrig, Jeanna	Wilmer, AL	7/20/2004
Bunton, Angela	Hamptonville, NC	7/20/2004
Burdette, Ross	Fayetteville, AR	7/20/2004
Burger, Nancy	Pittsburgh, PA	7/20/2004
Byerly, Judith	Erie, PA	7/20/2004
Cabral, Alvaro	New Bedford, MA	7/20/2004
Cantrell, Patricia	Mira Loma, CA	7/20/2004
Cardenas, Debra	Indianapolis, IN	7/20/2004
Carlisle, Patricia	Toledo, OH	7/20/2004
Carnduff, Frank	Parker, CO	7/20/2004
Clarke, Vivian	Seattle, WA	7/20/2004
Claude, Danny	Parkhill, OK	7/20/2004
Collins, Sheila	Malvern, AR	7/20/2004
Couch, Scarlett	Weatherford, TX	7/20/2004
Coughenour, Susan	Gallipolis, OH	7/20/2004
Cox, Warren	Louisville, KY	7/20/2004
Cronshaw, Stacy	Las Vegas, NV	7/20/2004
Crosby, Donna	San Jose, CA	7/20/2004
D'Aquino, Kristin	Moscow, ID	7/20/2004
Davidson, Donald	Escondido, CA	7/20/2004
Davis, Tracy	Brandenburg, KY	7/20/2004
Degrace, Jeannette	Providence, RI	7/20/2004
Digiovanni, Maria	Hamilton, OH	7/20/2004
Dillard, Cynthia	Milton, FL	7/20/2004
Dorf, Karen	Toledo, OH	7/20/2004
Dotimas, Jonathan	San Diego, CA	7/20/2004
Dougherty, Richard	Knoxville, TN	7/20/2004
Dunton, Karen	Salisbury, NC	7/20/2004
Durfee, Janet	Marlton, NJ	7/20/2004
Durham, James	Atlanta, GA	7/20/2004
Eccles, Suzanne	Salt Lake City, UT	7/20/2004
Edwards, India	El Cajon, CA	7/20/2004
Elias, Ruth	Tucson, AZ	7/20/2004
English, Tametris	Bainbridge, GA	7/20/2004
Englund, Philip	Mesa, AZ	7/20/2004
Engstrom, Melody	Sisters, OR	7/20/2004
Erickson, Donna	Gilbert, AZ	7/20/2004
Fairbanks, Brenda	Marshalltown, IA	7/20/2004
Faria, Jane W	W Palm Beach, FL	7/20/2004
Ferguson, Cheryl	McKees Rocks, PA	7/20/2004
Ferrel, Linda	Lake Stevens, WA	7/20/2004
Figueroa, Maria	Compton, CA	7/20/2004
Fikar, Barbara	Richmond Heights, OH	7/20/2004
Fish, Robin	Hague, NY	7/20/2004
Forrest, Tami	Oakland, CA	7/20/2004
Freeman, Timothy	Huntington Beach, CA	7/20/2004
Garner, Nancy	Jeffersonville, IN	7/20/2004
Garrison, Jonnell	Lakeport, CA	7/20/2004
George, Jody	Reading, PA	7/20/2004
Goff, Wendy	Portland, NH	7/20/2004
Gomany, Dale	Montgomery, AL	7/20/2004
Griffin, Michael	Pittsburgh, PA	7/20/2004
Grill, Elizabeth	N Las Vegas, NV	7/20/2004
Gunkel, Lori	El Cajon, CA	7/20/2004
Gustafson, Debra	Yuba City, CA	7/20/2004
Guzman, Armie	Belmont, CA	7/20/2004
Hall, Janeane	Painesville, OH	7/20/2004
Hall, Linda	Phoenix, AZ	7/20/2004
Hamilton, Dorothy	San Bernardino, CA	7/20/2004
Hamilton, Nicole	Latrobe, PA	7/20/2004
Hamson, Gail	Springfiield, PA	7/20/2004
Hardy, Steven	Arlington, VA	7/20/2004
Helms, Donald	Mesa, AZ	7/20/2004
Hooks, Andrea	Spanaway, WA	7/20/2004

Subject name	Address	Effective date
Howell, Lillian	Alpine, UT	7/20/2004
Hurt, Betty	Amory, MS	7/20/2004
Jackson, Darlene	Portsmouth, OH	7/20/2004
Jackson, Nancy	East Moline, IL	7/20/2004
Jimenez, Alicia	Los Angeles, CA	7/20/2004
Joehnk, Daniel	Port Orchard, WA	7/20/2004
Johnson, Welburne	Cookeville, TN	7/20/2004
Kessler, David	Scotts Dale, AZ	7/20/2004
Kirk, Shannon	Peoria, AZ	7/20/2004
Knapp, April	Phoenix, AZ	7/20/2004
Knight, Robert	Naples, FL	7/20/2004
Krause, Darla	Phoenix, AZ	7/20/2004
Kueneman, Barbara	Phoenix, AZ	7/20/2004
Lauren, Bella	Jupiter, FL	7/20/2004
Layog, Joseph	Riverside, CA	7/20/2004
Leclair, Lance	Davis, CA	7/20/2004
Lee, II	Anaheim, CA	7/20/2004
Lopez, Carmen	Vista, CA	7/20/2004
Lopez, Carol	Phoenix, AZ	7/20/2004
Lovett, Ellen	Aberdeen, OH	7/20/2004
Manning, Frances	Midwest City, OK	7/20/2004
Manning, Gerald	Carthage, TN	7/20/2004
Martinez, Sonia	Indio, CA	7/20/2004
Mayes, Gwendolyn	Tucson, AZ	7/20/2004
McCann, Becky	Bloomville, OH	7/20/2004
McCullough, Joseph	Alta Monte Springs, FL	7/20/2004
McDuffie, Raymond	Pikeville, TN	7/20/2004
Meason, Kami	Springville, UT	7/20/2004
Mendes, Kim	Greensboro, NC	7/20/2004
Moctezuma, Carlos	Rosemead, CA	7/20/2004
Moore, Sherrie	Litchfield, AZ	7/20/2004
Moore, Theresa	Yakima, WA	7/20/2004
Noey, Loretta	Victorville, CA	7/20/2004
Nolden, Sandra	Santa Rosa, CA	7/20/2004
Oliva, Renee	Chandler, AZ	7/20/2004
Omega, Rommel	Modesto, CA	7/20/2004
Padgett, Billy	Nacogdoches, TX	7/20/2004
Parsa, Mehry	Woodland Hills, CA	7/20/2004
Paternosto, Rachele	Ludlow, MA	7/20/2004
Payne, Sharon	Cincinnati, OH	7/20/2004
Peay, Kay	St George, UT	7/20/2004
Phillips, Carolyn	Kokomo, IN	7/20/2004
Pierce, Kathleen	Scottsdale, AZ	7/20/2004
Pincsak, Stephen	Yuba City, CA	7/20/2004
Proctor, Marcella	Payson, AZ	7/20/2004
Ramirez, Noemi	Green Valley, AZ	7/20/2004
Ray, Sharon	Springerville, AZ	7/20/2004
Rist, James	San Francisco, CA	7/20/2004
Roach, Mary	New Paris, IN	7/20/2004
Robbins, Clinton	Homestead, FL	7/20/2004
Rotella, Sam	Phoenix, AZ	7/20/2004
Sammon, Karla	Pueblo West, CO	7/20/2004
Samuel, Joanne	Shelton, WA	7/20/2004
Sarabia, Elizabeth	Garden Grove, CA	7/20/2004
Sauter, Lisa	Indianapolis, IN	7/20/2004
Schmidgall, Mackenzie	Lynnwood, WA	7/20/2004
Schmidt, Julia	Encinitas, CA	7/20/2004
Schmit, Nancy	Phoenix, AZ	7/20/2004
Shoemaker, Elaine	Denver, CO	7/20/2004
Shondee, Patrick	Phoenix, AZ	7/20/2004
Simpson, Amy	Madison, IN	7/20/2004
Skaggs, Karlene	Indianapolis, IN	7/20/2004
Smith, Jason	Seattle, WA	7/20/2004
Starkey, Mashana	Long Beach, CA	7/20/2004
Switzer, Daniel	Woonsocket, RI	7/20/2004
Sykes, Joanna	Mullens, WV	7/20/2004
Taylor, Michael	Chino Valley, AZ	7/20/2004
Thornburg, Peggy	Yuma, AZ	7/20/2004
Topai, Michael	Fruita, CO	7/20/2004
Torres, Edgardo	San Diego, CA	7/20/2004
Tuliau, Christopher	Long Beach, CA	7/20/2004
Tuthill, Beth	Everett, WA	7/20/2004
Vaccaro, Lynne	Tomah, WI	7/20/2004

Subject name	Address	Effective date
Vegas, Marcy	Pueblo, CO	7/20/2004
Venable, Mary	Indianapolis, IN	7/20/2004
Verne, Serge	San Diego, CA	7/20/2004
Von Foller, Deborah	Salt Lake City, UT	7/20/2004
Wagemaker, Kristin	Pierson, MI	7/20/2004
Walker, James	Broomfield, CO	7/20/2004
Ward, Steven	Indianapolis, IN	7/20/2004
Warga, Lynn	Pittsburgh, PA	7/20/2004
Wariner, Earlene	Tucson, AZ	7/20/2004
Weakly, Tiffon	Las Vegas, NV	7/20/2004
West, Cherry	Franklin, TN	7/20/2004
Williams, Kenyetta	Columbus, OH	7/20/2004
Williams, Michael	Monticello, KY	7/20/2004
Wilson, Torrey	Fredericksburg, VA	7/20/2004
Zickefoose, Phillip	Oskaloosa, IA	7/20/2004
Zintz, Vanda	Vancouver, WA	7/20/2004
Federal/State Exclusion/Suspension:		
Berman, Larry	Sanford, ME	7/20/2004
Owned/Controlled by Convicted Entities:		
Colose Chiropractic	Schenectady, NY	7/20/2004
I & Y Enterprise, Inc	Hialeah, FL	7/20/2004
J A B Medical Supplies, Inc	Homestead, FL	7/20/2004
Just Medical Equipment & Services, Inc	Miami, FL	7/20/2004
Legcare, Inc	Naples, FL	7/20/2004
M C M Medical Equipment & Supplies, Inc	Ft Myers, FL	7/20/2004
Miami Respiratory Care, Inc	Miami, FL	7/20/2004
Paramount Health Systems, Inc	Chicago, IL	7/20/2004
Quality Medical Rentals, Inc	Ft Myers, FL	7/20/2004
Veincare Institute, Inc	Boca Raton, FL	7/20/2004
Veincare International, Inc	Baco Raton, FL	7/20/2004
Veincare of Florida/Daytona BCH	Boca Raton, FL	7/20/2004
Veincare, Inc	Boca Raton, FL	7/20/2004
Default on Heal Loan:		
Caulkins, Robert	Shrewsbury, MA	7/20/2004
Clifton, Rhea	Dallas, TX	7/20/2004
Davidson, Blake	Richardson, TX	7/20/2004
Fitzgerald, Robert	Manlius, NY	7/20/2004
Gyaami, Opanin	Vacaville, CA	7/20/2004
Halstead, Kurt	Pacifica, CA	7/20/2004
Huynh, Lac	Albany, NY	7/20/2004
Langkop-Wade, Ann	Plano, TX	7/20/2004
Liebel-Cook, Donna	Fort Worth, TX	7/20/2004
Manzur, Juan	Indiana Springs, NV	4/21/2004
Martin, Joseph	Reedley, CA	6/16/2004
Mayorgo, Gilbert	Houston, TX	7/20/2004
Pankey, John	Alameda, CA	7/20/2004
Sasser, Terry	Arlington, TX	7/20/2004
Smith, Michael	Bethel Park, PA	7/20/2004
Spencer, Keivon	Cedar Hill, TX	7/20/2004
Tomlinson, Jody	Hereford, TX	7/20/2004
Troublefield, Earl	Armarillo, TX	7/20/2004
Valicenti, Patrick	Wallkill, NY	7/20/2004

Dated: June 8, 2004.

Kathleen Pettit,

Acting Director, Exclusions Staff, Office of Inspector General.

[FR Doc. 04–16138 Filed 7–15–04; 8:45 am]

BILLING CODE 4150–04–P

DEPARTMENT OF HEALTH AND HUMAN SERVICES

National Institutes of Health

Government-Owned Inventions; Availability for Licensing

AGENCY: National Institutes of Health, Public Health Service, DHHS.

ACTION: Notice.

SUMMARY: The inventions listed below are owned by an agency of the U.S. Government and are available for licensing in the U.S. in accordance with 35 U.S.C. 207 to achieve expeditious commercialization of results of federally-funded research and development. Foreign patent applications are filed on selected inventions to extend market coverage for companies and may also be available for licensing.

ADDRESSES: Licensing information and copies of the U.S. patent applications listed below may be obtained by writing to the indicated licensing contact at the Office of Technology Transfer, National Institutes of Health, 6011 Executive Boulevard, Suite 325, Rockville, Maryland 20852–3804; telephone: (301) 496–7057; fax: (301) 402–0220. A signed

Confidential Disclosure Agreement will be required to receive copies of the patent applications.

Autoantibody Detection for Cancer Diagnostics

Yoon Cho-Chung (NCI), US Provisional Application No. 60/551,776 filed 11 Mar 2004 (DHHS Reference No. E–081–2004/0–US–01)

Licensing Contact: Brenda Hefti; 301/435–4632; *heftib@mail.nih.gov.*

The current patent application addresses the need to discover novel biomarkers for the diagnosis, screening and monitoring of tumor progression or regression. The invention relates to compositions and methods for detecting autoantibodies against an extracellular form of protein kinase A (ECPKA) in a biological sample for the diagnosis of cancer. ECPKA is secreted from cancer cells which then elicits the formation of serum autoantibodies which can serve as a cancer diagnostic and prognostic marker. The invention describes a highly sensitive enzyme immunoassay that measures the presence of anti-ECPKA autoantibody in biological samples of cancer patients. The present invention demonstrates that the sera presence of autoantibody directed against ECPKA is highly correlative of cancer. The immunoassay developed for anti-ECPKA antibody is highly sensitive and specific. Use of the immunoassay exhibits markedly high anti-ECPKA antibody titers in cancer patients but low or non-existent titers in normal individual controls. Furthermore, use of the invention to detect anti-ECPKA antibodies is much more sensitive and specific than results from other current assays that detect only antigen activity. The invention demonstrates that the approach of autoantibody analysis, rather than conventional antigen analysis for ECPKA and other cancer antigens, provides a valuable approach for cancer diagnosis. This ECPKA-autoantibody-based immunoassay method provides an important diagnostic procedure applicable for the detection of cancers of various cell types.

Vaccine Peptide Derived from XAGE–1 to Prevent Tumor Growth

Jay A. Berzofsky, Ira H. Pastan, and Masaki Terabe (NCI), U.S. Provisional Application No. 60/529,025 filed 12 Dec 2003 (DHHS Reference No. E–090–2003/0–US–01)

Licensing Contact: Brenda Hefti; 301/435–4632; *heftib@mail.nih.gov.*

This invention describes a novel peptide derived from the protein XAGE–1 which is expressed specifically in cancer cells of prostate and breast cancer, as well as Ewing's sarcoma. This peptide is able to bind to human HLA–A2 molecules and to induce specific cytotoxic T lymphocyte response in vivo.

This peptide has therapeutic potential as an immunogen, and might induce cancer specific immune responses in cancer patients, which may cause regression of the cancer or prevent cancer metastasis.

Dated: July 6, 2004.

Steven M. Ferguson,

Director, Division of Technology Development and Transfer, Office of Technology Transfer, National Institutes of Health.

[FR Doc. 04–16124 Filed 7–15–04; 8:45 am]

BILLING CODE 4140–01–P

DEPARTMENT OF HEALTH AND HUMAN SERVICES

National Institutes of Health

Government-Owned Inventions; Availability for Licensing

AGENCY: National Institutes of Health, Public Health Service, DHHS.

ACTION: Notice.

SUMMARY: The inventions listed below are owned by an agency of the U.S. Government and are available for licensing in the U.S. in accordance with 35 U.S.C. 207 to achieve expeditious commercialization of results of federally-funded research and development. Foreign patent applications are filed on selected inventions to extend market coverage for companies and may also be available for licensing.

ADDRESSES: Licensing information and copies of the U.S. patent applications listed below may be obtained by writing to the indicated licensing contact at the Office of Technology Transfer, National Institutes of Health, 6011 Executive Boulevard, Suite 325, Rockville, Maryland 20852–3804; telephone: (301) 496–7057; fax: (301) 402–0220. A signed Confidential Disclosure Agreement will be required to receive copies of the patent applications.

Proteomic Toolkit for Protein Identification and Quantitation

David A. Lucas, Thomas P. Conrads, Timothy D. Veenstra (NCI/SAIC) DHHS Reference No. E–255–2004/0—Research Tool

Licensing Contact: Michael Shmilovich; (301) 435–5019; *shmilovm@mail.nih.gov.*

A popular software package for the analysis of raw tandem mass spectrometry proteomic data is SEQUEST (from ThermoFinnigan, San Jose, CA), which coverts raw mass spectral data into peptide identifications (Peptide IDs). The large number of Peptide IDs generated by SEQUEST are contained in a single file and require further analysis using other software to identify relevant peptides. The SEQUEST software, however, cannot combine multiple Peptide ID files nor perform data mining.

The present software developed at the NIH and available for licensing, allows multiple Peptide ID files to be collated into a single file for analysis. Thus, one can analyze and mine the data from multiple proteomic experiments. The software provides tools that are not currently available in the management of mass spectrometry proteomic data. This software can be used to query the data asking relevant questions and provide a statistical component. The NIH software also interfaces directly with SEQUEST.

Software for Determining Features of an Anatomical Boundary Within a Digital Representation of Tissue

Jianhua Yao and Ronald Summers (NIHCC), U.S. Patent Application No. 10/779,210 filed 13 Feb 2004 (DHHS Reference No. E–351–2003/0-US–01), claiming priority to U.S. Provisional Application No. 60/510,640 filed 10 Oct 2003 (DHHS Reference No. E–174–2003/0–US–01).

Licensing Contact: Michael Shmilovich; (301) 435–5019; *shmilovm@mail.nih.gov.* Available for licensing and commercial use and/or distribution is software for analyzing virtual anatomical structures and computing the enclosing three-dimensional boundaries. Various techniques can be used to determine tissue types in the virtual anatomical structure. For example, tissue types can be determined via an iso-boundary between lumen and air in the virtual anatomical structure and a fuzzy clustering approach. Based on the tissue type determination, a deformable model approach can be used to determine an enclosing three-dimensional boundary of a feature in the virtual anatomical structure (*e.g.*, a colonic polyp). The software can be applied in a two-dimensional scenario, in which an enclosing two-dimensional boundary is first determined in a two-dimensional digital representation (for example, a slice of a three-dimensional representation) and then propagated to neighboring slices to result in an enclosing three-dimensional boundary of a feature. The software can also be applied in a three-dimensional scenario, in which an enclosing three-

dimensional boundary of a feature is determined using three-dimensional techniques for tissue classification and converging via a deformable surface to avoid propagation.

Abciximab Pharmacodynamic Pattern Recognition

Mirna Urquidi-MacDonald (Penn State), Darrell Abernethy (NIA), U.S. Patent Application No. 10/810,809 filed 29 Mar 2004 (DHHS Reference No. E–319–2003/0–US–01).

Licensing Contact: Michael Shmilovich; (301) 435–5019, *shmilovm@mail.nih.gov.*

Available for licensing and rapid implementation is a computerized neural network for predicting drug dosage and clinical outcome based on the use of data from drug dosage, drug effect and patient clinical characteristics. This network is especially suited to predict dosage and outcome for Abciximab. By establishing associated mapping, the neural network can predict a drug effect for a given patient characteristic and conversely predict drug dosing for a given drug effect and patient characteristic. The associative mapping is established and can be modulated by setting and adjusting weights of the connections between nodes in the neural network. The invention uses a feed-forward back-propagation neural network to model pharmacodynamic behavior and to predict drug dosage.

Dated: July 6, 2004.

Steven M. Ferguson,

Director, Division of Technology Development and Transfer, Office of Technology Transfer, National Institutes of Health.

[FR Doc. 04–16126 Filed 7–15–04; 8:45 am]

BILLING CODE 4140–01–P

DEPARTMENT OF HEALTH AND HUMAN SERVICES

National Institutes of Health

National Cancer Institute; Notice of Meeting

Pursuant to section 10(a) of the Federal Advisory Committee Act, as amended (5 U.S.C. Appendix 2), notice is hereby given of a meeting of the National Cancer Institute Board of Scientific Advisors.

The meeting will be open to the public, with attendance limited to space available. Individuals who plan to attend and need special assistance, such as sign language interpretation or other reasonable accommodations, should notify the Contact Person listed below in advance of the meeting.

Name of Committee: National Cancer Institute Board of Scientific Advisors.

Date: July 12, 2004.

Time: 8:30 a.m. to 1 p.m.

Agenda: Nanotechnology Initiative, Science Session and Concept Review.

Place: Hyatt Regency Bethesda, One Bethesda Metro Center, 7400 Wisconsin Avenue, Bethesda, MD 20814.

Contact Person: Paulette S. Gray, PhD, Executive Secretary, Acting Director, Division of Extramural Activities, National Cancer Institute, National Institutes of Health, 6116 Executive Boulevard, 8th Floor, Rm. 8141, Bethesda, MD 20892, 301–496–4218.

This meeting is being published 15 days prior to the meeting due to scheduling conflicts.

Any interested person may file written comments with the committee by forwarding the statement to the Contact Person listed on this notice. The statement should include the name, address, telephone number and when applicable, the business or professional affiliation of the interested person.

Information is also available on the Institute's/Center's home page: *deainfo.nci.nih.gov/advisory/bsa.htm,* where an agenda and any additional information for the meeting will be posted when available.

(Catalogue of Federal Domestic Assistance Program Nos. 93.392, Cancer Construction; 93.393, Cancer Cause and Prevention Research; 93.394, Cancer Detection and Diagnosis Research; 93.395, Cancer Treatment Research; 93.396, Cancer Biology Research; 93.397, Cancer Centers Support; 93.398, Cancer Research Manpower; 93.399, Cancer Control, National Institutes of Health, HHS)

Dated: July 8, 2004.

LaVerne Y. Stringfield,

Director, Office of Federal Advisory Committee Policy.

[FR Doc. 04–16120 Filed 7–15–04; 8:45 am]

BILLING CODE 4140–01–M

DEPARTMENT OF HEALTH AND HUMAN SERVICES

National Institutes of Health

National Institute of Diabetes and Digestive and Kidney Diseases; Notice of Closed Meetings

Pursuant to section 10(d) of the Federal Advisory Committee Act, as amended (5 U.S.C. Appendix 2), notice is hereby given of the following meetings.

The meetings will be closed to the public in accordance with the provisions set forth in sections 552b(c)(4) and 552b(c)(6), Title 5 U.S.C., as amended. The grant applications and the discussions could disclose confidential trade secrets or commercial property such as patentable material, and personal information concerning individuals associated with the grant applications, the disclosure of which would constitute a clearly unwarranted invasion of personal privacy.

Name of Committee: National Institute of Diabetes and Digestive and Kidney Diseases Special Emphasis Panel; Channels and Kidney Function.

Date: July 12, 2004.

Time: 9 a.m. to 5 p.m.

Agenda: To review and evaluate grant applications.

Place: Bethesda Marriott Suites, 6711 Democracy Boulevard, Bethesda, MD 20817.

Contact Person: Michele L. Barnard, PhD, Scientific Review Administrator, Review Branch, DEA, NIDDK, National Institutes of Health, Room 753, 6707 Democracy Boulevard, Bethesda, MD 20892–5452, (301) 594–8898, *barnardm@extra.niddk.nih.gov.*

This notice is being published less than 15 days prior to the meeting due to the timing limitations imposed by the review and funding cycle.

Name of Committee: National Institute of Diabetes and Digestive and Kidney Diseases Special Emphasis Panel, Translational Research for the Prevention and Control of Diabetes.

Date: July 23, 2004.

Time: 8 a.m. to 5 p.m.

Agenda: To review and evaluate grant applications.

Place: Bethesda Marriott Suites, 6711 Democracy Boulevard, Bethesda, MD 20817.

Contact Person: Michele L. Barnard, PhD, Scientific Review Administrator, Review Branch, DEA, NIDDK, National Institutes of Health, Room 753, 6707 Democracy Boulevard, Bethesda, MD 20892–5452, (301) 594–8898, *barnardm@extra.niddk.nih.gov.*

This notice is being published less than 15 days prior to the meeting due to the timing limitations imposed by the review and funding cycle.

Name of Committee: National Institute of Diabetes and Digestive and Kidney Diseases Special Emphasis Panel, Primary Biliary Cirrhosis Clinical Trial.

Date: July 27, 2004.

Time: 3:30 p.m. to 5:30 p.m.

Agenda: To review and evaluate grant applications.

Place: National Institutes of Health, Two Democracy Plaza, 6707 Democracy Boulevard, Bethesda, MD 20892 (Telephone Conference Call).

Contact Person: John F. Connaughton, PhD, Scientific Review Administrator, Review Branch, DEA, NIDDK, National Institutes of Health, Room 757, 6707 Democracy Boulevard, Bethesda, MD 20892–5452, (301) 594–7797, *connaughtonj@.extra.niddk.nih.gov.*

This notice is being published less than 15 days prior to the meeting due to the timing limitations imposed by the review and funding cycle.

Name of Committee: National Institute of Diabetes and Digestive and Kidney Diseases Special Emphasis Panel, Therapy in New Onset Type 1 Diabetes Mellitus.

Date: July 29, 2004.

Time: 2 p.m. to 3:30 p.m.

Agenda: To review and evaluate grant applications.

Place: National Institutes of Health, Two Democracy Plaza, 6707 Democracy Boulevard, Bethesda, MD 20814.

Contact Person: Michele L. Barnard, Ph.D., Scientific Review Administrator, Review Branch, DEA, NIDDK, National Institutes of Health, Room 753, 6707 Democracy Boulevard, Bethesda, MD 20892–5452, (301) 594–8898, *barnardm@extra.niddk.nih.gov*.

This notice is being published less than 15 days prior to the meeting due to the timing limitations imposed by the review and funding cycle.

Name of Committee: National Institute of Diabetes and Digestive and Kidney Diseases Special Emphasis Panel, Develop New Therapies for Type 1 Diabetes and Its Complications.

Date: July 30, 2004.

Time: 8 a.m. to 5 p.m.

Agenda: To review and evaluate grant applications.

Place: Courtyard by Marriott, Crystal City, 2899 Jefferson Davis Highway, Arlington, VA 22202.

Contact Person: Maxine A. Lesniak, MPH Scientific Review Administrator, Review Branch, DEA, NIDDK, National Institutes of Health, Room 756, 6707 Democracy Boulevard, Bethesda, MD 20892–5452, (301) 594–7792, *lesniakm@extra.niddk.nih.gov*.

This notice is being published less than 15 days prior to the meeting due to the timing limitations imposed by the review and funding cycle.

Name of Committee: National Institute of Diabetes and Digestive and Kidney Diseases Special Emphasis Panel, Training for a New Interdisciplinary Research Workforce.

Date: August 2–3, 2004.

Time: 8 a.m. to 2 p.m.

Agenda: To review and evaluate grant applications.

Place: Bethesda Marriott Pooks Hill, 5151 Pooks Hill Road, Bethesda, MD 20814.

Contact Person: Ned Feder, MD, Scientific Review Administrator, Review Branch, DEA, NIDDK, National Institutes of Health, Room 748, 6707 Democracy Boulevard, Bethesda, MD 20892–5452, (301) 594–8890, *federn@extra.niddk.nih.gov*.

This notice is being published less than 15 days prior to the meeting due to the timing limitations imposed by the review and funding cycle.

Name of Committee: National Institute of Diabetes and Digestive and Kidney Diseases Special Emphasis Panel, Genetic Studies of Obesity Related in Model Organisms.

Date: August 10, 2004.

Time: 8 a.m. to 5 p.m.

Agenda: To review and evaluate grant applications.

Place: Hyatt Regency Crystal City, 2799 Jefferson Davis Hwy., Arlington, VA 22202.

Contact Person: Maxine A. Lesniak, MPH, Scientific Review Administrator, Review Branch, DEA, NIDDK, National Institutes of Health, Room 756, 6707 Democracy Boulevard, Bethesda, MD 20892–5452, (301) 594–7792, *lesniakm@extra.niddk.nih.gov*.

(Catalogue of Federal Domestic Assistance Program Nos. 93.847, Diabetes, Endocrinology and Metabolic Research; 93.848, Digestive Diseases and Nutrition Research; 93.849, Kidney Diseases, Urology and Hematology Research, National Institutes of Health, HHS)

Dated: July 8, 2004.

LaVerne Y. Stringfield,

Director, Office of Federal Advisory Committee Policy.

[FR Doc. 04–16112 Filed 7–15–04; 8:45 am]

BILLING CODE 4140–01–M

DEPARTMENT OF HEALTH AND HUMAN SERVICES

National Institutes of Health

National Institute of Mental Health; Notice of Closed Meetings

Pursuant to section 10(d) of the Federal Advisory Committee Act, as amended (5 U.S.C. Appendix 2), notice is hereby given of the following meetings.

The meetings will be closed to the public in accordance with the provisions set forth in sections 552b(c)(4) and 552b(c)(6), Title 5 U.S.C., as amended. The grant applications and the discussions could disclose confidential trade secrets or commercial property such as patentable material, and personal information concerning individuals associated with the grant applications, the disclosure of which would constitute a clearly unwarranted invasion of personal privacy.

Name of Committee: National Institute of Mental Health Special Emphasis Panel, NCDDG, Panel II.

Date: July 27, 2004.

Time: 9 a.m. to 5 p.m.

Agenda: To review and evaluate grant applications.

Place: Hyatt Regency Bethesda, One Bethesda Metro Center, 7400 Wisconsin Avenue, Bethesda, MD 20814.

Contact Person: Peter J. Sheridan, PhD, Scientific Review Administrator, Division of Extramural Activities, National Institute of Mental Health, NIH, Neuroscience Center, 6001 Executive Blvd., Room 6142, MSC 9606, Bethesda, MD 20892–9606, 301–443–1513, *psherida@mail.nih.gov.*

This notice is being published less than 15 days prior to the meeting due to the timing limitations imposed by the review and funding cycle.

Name of Committee: National Institute of Mental Health Special Emphasis Panel SRV Conflicts III.

Date: July 27, 2004.

Time: 2 p.m. to 3 p.m.

Agenda: To review and evaluate grant applications.

Place: National Institutes of Health, Neuroscience Center, 6001 Executive Boulevard, Rockville, MD 20852, (Telephone Conference Call).

Contact Person: Aileen Schulte, PhD., Scientific Review Administrator, Division of Extramural Activities, National Institute of Mental Health, NIH, Neuroscience Center, 6001 Executive Blvd, Room 6140, MSC 9608, Bethesda, MD 20892–9608, 301–443–1225, *aschulte@mail.nih.gov.*

This notice is being published less than 15 days prior to the meeting due to the timing limitations imposed by the review and funding cycle.

(Catalogue of Federal Domestic Assistance Program Nos. 93.242, Mental Health Research Grants; 93.281, Scientist Development Award, Scientist Development Award for Clinicians, and Research Scientist Award; 93.282, Mental Health National Research Service Awards for Research Training, National Institutes of Health, HHS)

Dated: July 9, 2004.

Laverne Y. Stringfield,

Director, Office of Federal Advisory Committee Policy.

[FR Doc. 04–16113 Filed 7–15–04; 8:45 am]

BILLING CODE 4140–01–M

DEPARTMENT OF HEALTH AND HUMAN SERVICES

National Institutes of Health

National Institute of Child Health and Human Development; Notice of Closed Meeting.

Pursuant to section 10(d) of the Federal Advisory Committee Act, as amended (5 U.S.C. Appendix 2), notice is hereby given of the following meeting.

The meeting will be closed to the public in accordance with the provisions set forth in sections 552b(c)(4) and 552b(c)(6), Title 5 U.S.C., as amended. The grant applications and the discussions could disclose confidential trade secrets or commercial property such as patentable material, and personal information concerning individuals associated with the grant applications, the disclosure of which would constitute a clearly unwarranted invasion of personal privacy.

Name of Committee: National Institute of Child Health and Human Development Special Emphasis Panel, Establishing the Precursors of the Metabolic Syndrome in Children.

Date: August 2–3, 2004

Time: 9:30 a.m. to 5 p.m.

Agenda: To review and evaluate grant applications.

Place: Holiday Inn Select Bethesda, 8120 Wisconsin Ave, Bethesda, MD 20814.

Contact Person: Gopal M. Bhatnagar, PhD, Scientific Review Administrator, National Institute of Child Health and Human Development, National Institutes of Health, 6100 Bldg, Rm 5B01, Rockville, MD 20852, (301) 435–6889 *bhatnagg@mail.nih.gov.*

(Catalogue of Federal Domestic Assistance Program Nos. 93.864, Population Research; 93.865, Research for Mothers and Children;

93.929, Center for Medical Rehabilitation Research; 93.209, Contraception and Infertility Loan Repayment Program, National Institutes of Health, HHS)

Dated: July 9, 2004.

LaVerne Y. Stringfield,

Director, Office of Federal Advisory Committee Policy.

[FR Doc. 04–16114 Filed 7–15–04; 8:45 am]

BILLING CODE 4140–01–M

DEPARTMENT OF HEALTH AND HUMAN SERVICES

National Institutes of Health

National Institute on Drug Abuse; Notice of Closed Meeting

Pursuant to section 10(d) of the Federal Advisory Committee Act, as amended (5 U.S.C. Appendix 2), notice is hereby given of the following meeting.

The meeting will be closed to the public in accordance with the provisions set forth in sections 552b(c)(4) and 552b(c)(6), Title 5 U.S.C., as amended. The grant applications and the discussions could disclose confidential trade secrets or commercial property such as patentable material, and personal information concerning individuals associated with the grant applications, the disclosure of which would constitute a clearly unwarranted invasion of personal privacy.

Name of Committee: National Institute on Drug Abuse Special Emphasis Panel; Minority Institutions Drug Abuse Research Development Program (MIDARP).

Date: August 6, 2004.

Time: 9 a.m. to 5 p.m.

Agenda: To review and evaluate grant applications.

Place: Ritz-Carlton Hotel at Pentagon City, 1250 South Hayes Street, Arlington, VA 22202.

Contact Person: Khursheed Asghar, PhD, Chief, Basic Sciences Review Branch, Office of Extramural Affairs, National Institute on Drug Abuse, NIH, DHHS, Room 200, MSC 8401, 6101 Executive Boulevard, Bethesda, MD 20892–8401, (301) 443–2755.

(Catalogue of Federal Domestic Assistance Program Nos. 93.277, Drug Abuse Scientist Development Award for Clinicians, Scientist Development Awards, and Research Scientist Awards; 93.278, Drug Abuse National Research Service Awards for Research Training; 93.279, Drug Abuse Research Programs, National Institutes of Health, HHS)

Dated: July 7, 2004.

LaVerne Y. Stringfield,

Director, Office of Federal Advisory Committee Policy.

[FR Doc. 04–16115 Filed 7–15–04; 8:45 am]

BILLING CODE 4140–01–M

DEPARTMENT OF HEALTH AND HUMAN SERVICES

National Institutes of Health

National Institute on Drug Abuse; Notice of Closed Meeting

Pursuant to section 10(d) of the Federal Advisory Committee Act, as amended (5 U.S.C. Appendix 2), notice is hereby given of the following meeting.

The meeting will be closed to the public in accordance with the provisions set forth in sections 552b(c)(4) and 552b(c)(6), Title 5 U.S.C., as amended. The contract proposals and the discussions could disclose confidential trade secrets or commercial property such as patentable material, and personal information concerning individuals associated with the contract proposals, the disclosure of which would constitute a clearly unwarranted invasion of personal privacy.

Name of Committee: National Institute on Drug Abuse Special Emphasis Panel; ''Collaborative MDMA and Other Club Drugs Study''.

Date: July 21, 2004.

Time: 3 p.m. to 5 p.m.

Agenda: To review and evaluate contract proposals.

Place: National Institutes of Health, 6101 Executive Boulevard, Rockville, MD 20852, (Telephone Conference Call).

Contact Person: Richard C. Harrison, Chief, Contract Review Branch, Office of Extramural Affairs, National Institute on Drug Abuse, NIH, DHHS, Room 220, MSC 8401, 6101 Executive Boulevard, Bethesda, MD 20892–8401. 301 345–1437

This notice is being published less than 15 days prior to the meeting due to the timing limitations imposed by the review and funding cycle.

(Catalogue of Federal Domestic Assistance Program Nos. 93.277, Drug Abuse Scientist Development Award for Clinicians, Scientist Development Awards, and Research Scientist Awards; 93.278, Drug Abuse National Research Service Awards for Research Training; 93.279, Drug Abuse Research Programs, National Institutes of Health, HHS)

Dated: July 7, 2004.

LaVerne Y. Stringfield,

Director, Office of Federal Advisory Committee Policy.

[FR Doc. 04–16116 Filed 7–15–04; 8:45 am]

BILLING CODE 4140–01–M

DEPARTMENT OF HEALTH AND HUMAN SERVICES

National Institutes of Health

National Institute of Neurological Disorders and Stroke; Notice of Closed Meeting

Pursuant to section 10(d) of the Federal Advisory Committee Act, as amended (5 U.S.C. Appendix 2), notice is hereby given of the following meeting.

The meeting will be closed to the public in accordance with the provisions set forth in sections 552b(c)(4) and 552b(c)(6), Title 5 U.S.C., as amended. The grant applications and the discussions could disclose confidential trade secrets or commercial property such as patentable material, and personal information concerning individuals associated with the grant applications, the disclosure of which would constitute a clearly unwarranted invasion of personal privacy.

Name of Committee: National Institute on Neurological Disorders and Stroke Special Emphasis Panel Institutional Training & Career Development.

Date: July 21, 2004.

Time: 2 p.m. to 5 p.m.

Agenda: To review and evaluate contract applications.

Place: National Institutes of Health, Neuroscience Center, 6001 Executive Boulevard, Rockville, MD 20852 (Telephone Conference Call).

Contact Person: Raul A Saavedra, PhD, Scientific Review Administrator, Scientific Review Branch, Division of Extramural Research, NINDS/NIH/DHHS, NSC; 6001 Executive Blvd., Ste. 3208, Bethesda, MD 20892, 301–496–9223, *saavedrr@ninds.nih.gov.*

(Catalogue of Federal Domestic Assistance Program Nos. 93.853, Clinical Research Related to Neurological Disorders; 93.854, Biological Basis Research in the Neurosciences, Institutes of Health, HHS)

Dated: July 7, 2004.

LaVerne Y. Stringfield,

Director, Office of Federal Advisory Committee Policy.

[FR Doc. 04–16117 Filed 7–15–04; 8:45 am]

BILLING CODE 4140–01–M

DEPARTMENT OF HEALTH AND HUMAN SERVICES

National Institutes of Health

National Institute on Alcohol Abuse and Alcoholism; Notice of Closed Meeting

Pursuant to section 10(d) of the Federal Advisory Committee Act, as amended (5 U.S.C. Appendix 2), notice

is hereby given of the following meeting.

The meeting will be closed to the public in accordance with the provisions set forth in sections 552b(c)(4) and 552b(c)(6), Title 5 U.S.C., as amended. The grant applications and the discussions could disclose confidential trade secrets or commercial property such as patentable material, and personal information concerning individuals associated with the grant applications, the disclosure of which would constitute a clearly unwarranted invasion of personal privacy.

Name of Committee: National Institute of Alcohol Abuse and Alcoholism Special Emphasis Panel; IRG ZAA DD24 Application Review.

Date: July 12, 2004.

Time: 11 a.m. to 12 p.m.

Agenda: To revew and evaluate grant applications.

Place: National Institutes of Health, NIAAA/Fishers Building, 5635 Fishers Lane, 3045, Bethesda, MD 20892 (Telephone Conference Call).

Contact Person: Sathasiva B. Kandasamy, PhD, Scientific Review Administrator, Extramural Project Review Branch, Office of Scientific Affairs, National Institute on Alcohol Abuse and Alcoholism, Bethesda, MD 20892–9304, (301) 443–2926, *skandasa@mail.nih.gov.*

This notice is being published less than 15 days prior to the meeting due to the timing limitations imposed by the review and funding cycle.

(Catalogue of Federal Domestic Assistance Program Nos. 93.271, Alcohol Research Career Development Awards for Scientists and Clinicians; 93.272, Alcohol National Research Service Awards for Research Training; 93.273, Alcohol Research Programs; 93.891, Alcohol Research Center Grants, National Institutes of Health, HHS)

Dated: July 8, 2004.

LaVerne Y. Stringfield,

Director, Office of Federal Advisory Committee Policy.

[FR Doc. 04–16119 Filed 7–15–04; 8:45 am]

BILLING CODE 4140–01–M

DEPARTMENT OF HEALTH AND HUMAN SERVICES

National Institutes of Health

National Institute on Aging; Notice of Closed Meetings

Pursuant to section 10(d) of the Federal Advisory Committee Act, as amended (5 U.S.C. Appendix 2), notice is hereby given of the following meetings.

The meetings will be closed to the public in accordance with the provisions set forth in sections 552b(c)(4) and 552b(c)(6), Title 5 U.S.C., as amended. The grant applications and the discussions could disclose confidential trade secrets or commercial property such as patentable material, and personal information concerning individuals associated with the grant applications, the disclosure of which would constitute a clearly unwarranted invasion of personal privacy.

Name of Committee: National Institute on Aging Special Emphasis Panel; Alzheimer's Disease Pet Imaging.

Date: July 29–30, 2004.

Time: 7 p.m. to 4 p.m.

Agenda: To review and evaluate grant applications.

Place: Holiday Inn Chevy Chase, 5520 Wisconsin Avenue, Chevy Chase, MD 20815.

Contact Person: William Cruce, PhD, Health Scientist Administrator, Scientific Review Office, National Institute on Aging, National Institutes of Health, Room 2C212, 7201 Wisconsin Avenue, Bethesda, MD 20892, 301–402–7704, *crucew@nia.nih.gov.*

This notice is being published less than 15 days prior to the meeting due to the timing limitations imposed by the review and funding cycle.

Name of Committee: National Institute on Aging Special Emphasis Panel, Stem Cells and Aging.

Date: August 2, 2004.

Time: 8 a.m. to 5 p.m.

Agenda: To review and evaluate grant applications.

Place: Four Points by Sheraton Bethesda, 8400 Wisconsin Avenue, Bethesda, MD 20814.

Contact Person: Ramesh Vemuri, PhD, Health Scientist Administrator, Scientific Review Office, National Institute on Aging, National Institutes of Health, Room 2C212, 7201 Wisconsin Avenue, Bethesda, MD 20892, 301–402–7700, *rv23r@nih.gov.*

Name of Committee: National Institute on Aging Special Emphasis Panel; Dementia and Cognitive Decline.

Date: August 3, 2004.

Time: 4 p.m. to 5:30 p.m.

Agenda: To review and evaluate grant applications.

Place: National Institute on Aging, Gateway Building, 7201 Wisconsin Ave, 2C212, Bethesda, MD 20892, (Telephone Conference Call).

Contact Person: Ramesh Vemuri, PhD, Health Scientist Administrator, Scientific Review Office, National Institute on Aging, National Institutes of Health, Room 2C212, 7201 Wisconsin Avenue, Bethesda, MD 20892, 301–402–7700, *rv23r@nih.gov.*

(Catalogue of Federal Domestic Assistance Program Nos. 93.866, Aging Research, National Institutes of Health, HHS)

Dated: July 8, 2004.

LaVerne Y. Stringfield,

Director, Office of Federal Advisory Committee Policy.

[FR Doc. 04–16121 Filed 7–15–04; 8:45 am]

BILLING CODE 4140–01–M

DEPARTMENT OF HEALTH AND HUMAN SERVICES

National Institutes of Health

National Institute of Arthritis and Musculoskeletal and Skin Diseases; Notice of Closed Meetings

Pursuant to section 10(d) of the Federal Advisory Committee Act, as amended (5 U.S.C. Appendix 2), notice is hereby given of the following meetings.

The meetings will be closed to the public in accordance with the provisions set forth in sections 552b(c)(4) and 552b(c)(6), Title 5 U.S.C., as amended. The grant applications and the discussions could disclose confidential trade secrets or commercial property such as patentable material, and personal information concerning individuals associated with the grant applications, the disclosure of which would constitute a clearly unwarranted invasion of personal privacy.

Name of Committee: National Institute of Arthritis and Musculoskeletal and Skin Diseases Special Emphasis Panel; Review of Research Project Applications (RO1s).

Date: July 28, 2004.

Time: 8 a.m. to 5 p.m.

Agenda: To review and evaluate grant applications.

Place: Holiday Inn Chevy Chase, 5520 Wisconsin Avenue, Chevy Chase, MD 20815.

Contact Person: Yan Z. Wang, PhD, Scientific Review Administrator, National Institute of Arthritis and Musculoskeletal and Skin Diseases, 6701 Democracy Blvd., Suite 820, Bethesda, MD 20892, (301) 594–4957.

This notice is being published less than 15 days prior to the meeting due to the timing limitations imposed by the review and funding cycle.

Name of Committee: National Institute of Arthritis and Musculoskeletal and Skin Diseases Special Emphasis Panel; Review of Small Research Applications (RO3s).

Date: August 2, 2004.

Time: 8 a.m. to 5 p.m.

Agenda: To review and evaluate grant applications.

Place: Bethesda Marriott, 5151 Pooks Hill Road, Bethesda, MD 20814.

Contact Person: Yan Z. Wang, PhD, Scientific Review Administrator, National Institute of Arthritis and Musculoskeletal and Skin Diseases, 6701 Democracy Blvd., Suite 820, Bethesda, MD 20892, (301) 594–4957.

This notice is being published less than 15 days prior to the meeting due to the timing limitations imposed by the review and funding cycle.

(Catalogue of Federal Domestic Assistance Program Nos. 93.846, Arthritis, Musculoskeletal and Skin Diseases Research, National Institutes of Health, HHS)

Dated: July 8, 2004.

LaVerne Y. Stringfield,

Director, Office of Federal Advisory Committee Policy.

[FR Doc. 04–16122 Filed 7–15–04; 8:45 am]

BILLING CODE 4140–01–M

DEPARTMENT OF HEALTH AND HUMAN SERVICES

National Institutes of Health

Center for Scientific Review; Notice of Closed Meetings

Pursuant to section 10(d) of the Federal Advisory Committee Act, as amended (5 U.S.C. Appendix 2), notice is hereby given of the following meetings.

The meetings will be closed to the public in accordance with the provisions set forth in sections 552b(c)(4) and 552b(c)(6), Title 5 U.S.C., as amended. The grant applications and the discussions could disclose confidential trade secrets or commercial property such as patentable material, and personal information concerning individuals associated with the grant applications, the disclosure of which would constitute a clearly unwarranted invasion of personal privacy.

Name of Committee: Center for Scientific Review Special Emphasis Panel, Transplantation Immunity.

Date: July 12, 2004.

Time: 1 p.m. to 4 p.m.

Agenda: To review and evaluate grant applications.

Place: National Institutes of Health, 6701 Rockledge Drive, Bethesda, MD 20892 (Telephone Conference Call).

Contact Person: Betty Hayden, PhD, Scientific Review Administrator, Center for Scientific Review, National Institutes of Health, 6701 Rockledge Drive, Room 4206, MSC 7812, Bethesda, MD 20892, 301–435–1223, *haydenb@csr.nih.gov.*

This notice is being published less than 15 days prior to the meeting due to the timing limitations imposed by the review and funding cycle.

Name of Committee: Center for Scientific Review Special Emphasis Panel, Anterior Eye Disease.

Date: July 14, 2004.

Time: 9 a.m. to 10 a.m.

Agenda: To review and evaluate grant applications.

Place: National Institutes of Health, 6701 Rockledge Drive, Bethesda, MD 20892 (Telephone Conference Call).

Contact Person: Christine A. Livingston, PhD, Scientific Review Administrator, Center for Scientific Review, National Institutes of Health, 6701 Rockledge Drive, Room 5202, MSC 7846, Bethesda, MD 20892, 301–435–1172, *livingsc@csr.nih.gov.*

This notice is being published less than 15 days prior to the meeting due to the timing limitations imposed by the review and funding cycle.

Name of Committee: Center for Scientific Review Special Emphasis Panel, Electron Microscopy.

Date: July 15, 2004.

Time: 8:30 a.m. to 5 p.m.

Agenda: To review and evaluate grant applications.

Place: The River Inn, 924 25th Street, NW., Washington, DC 20037.

Contact Person: Richard D. Rodewald, PhD, Scientific Review Administrator, Center for Scientific Review, National Institutes of Health, 6701 Rockledge Drive, Room 5142, MSC 7840, Bethesda, MD 20892, 301–435–1024, *rodewalr@csr.nih.gov.*

This notice is being published less than 15 days prior to the meeting due to the timing limitations imposed by the review and funding cycle.

Name of Committee: Center for Scientific Review Special Emphasis Panel, Bacterial, Fungal, and Viral Pathogenesis in AIDS.

Date: July 19, 2004.

Time: 8:30 a.m. to 11:30 a.m.

Agenda: To review and evaluate grant applications.

Place: Hyatt Regency Bethesda, One Bethesda Metro Center, 7400 Wisconsin Avenue, Bethesda, MD 20814.

Contact Person: Mary Clare Walker, PhD, Scientific Review Administrator, Center for Scientific Review, National Institutes of Health, 6701 Rockledge Drive, Room 5104, MSC 7852, Bethesda, MD 20892, 301–435–1165, *walkermc@csr.nih.gov.*

This notice is being published less than 15 days prior to the meeting due to the timing limitations imposed by the review and funding cycle.

Name of Committee: Center for Scientific Review Special Emphasis Panel, Protein Expression Study Section.

Date: July 19, 2004.

Time: 8:30 a.m. to 5 p.m.

Agenda: To review and evaluate grant applications.

Place: Four Points By Sheraton, 8400 Wisconsin Avenue, Bethesda, MD 20814.

Contact Person: Alec S. Liacouras, PhD, Scientific Review Administrator, Center for Scientific Review, National Institutes of Health, 6701 Rockledge Drive, Room 5040, MSC 7840, Bethesda, MD 20892, 301–869–8266, *liacoura@csr.nih.gov.*

This notice is being published less than 15 days prior to the meeting due to the timing limitations imposed by the review and funding cycle.

Name of Committee: Center for Scientific Review Special Emphasis Panel, ZRG1 VACC (01): HIV/AIDS Vaccines.

Date: July 19–20, 2004.

Time: 11:30 a.m. to 12 p.m.

Agenda: To review and evaluate grant applications.

Place: Hyatt Regency Bethesda, One Bethesda Metro Center, 7400 Wisconsin Avenue, Bethesda, MD 20814.

Contact Person: Mary Clare Walker, PhD, Scientific Review Administrator, Center for Scientific Review, National Institutes of Health, 6701 Rockledge Drive, Room 5104, MSC 7852, Bethesda, MD 20892, (301) 435–1165, *walkermc@csr.nih.gov.*

This notice is being published less than 15 days prior to the meeting due to the timing limitations imposed by the review and funding cycle.

Name of Committee: Center for Scientific Review Special Emphasis Panel, ZRG1 AARR–C 11B: Small Business: AIDS Vaccines.

Date: July 20, 2004.

Time: 2 p.m. to 5 p.m.

Agenda: To review and evaluate grant applications.

Place: Hyatt Regency Bethesda, One Bethesda Metro Center, 7400 Wisconsin Avenue, Bethesda, MD 20814.

Contact Person: Mary Clare Walker, PhD, Scientific Review Administrator, Center for Scientific Review, National Institutes of Health, 6701 Rockledge Drive, Room 5104, MSC 7852, Bethesda, MD 20892, (301) 435–1165, *walkermc@csr.nih.gov.*

This notice is being published less than 15 days prior to the meeting due to the timing limitations imposed by the review and funding cycle.

Name of Committee: Center for Scientific Review Special Emphasis Panel, Special Emphasis Panel.

Date: July 21, 2004.

Time: 11 a.m. to 1 p.m.

Agenda: To review and evaluate grant applications.

Place: National Institutes of Health, 6701 Rockledge Drive, Bethesda, MD 20892. (Telphone Conference Call).

Contact Person: Denise Wiesch, PhD, Scientific Review Administrator, Center for Scientific Review, National Institutes of Health, 6701 Rockledge Drive, Room 3150, MSC 7770, Bethesda, MD 20892, (301) 435–0684, *wieschd@csr.nih.gov.*

This notice is being published less than 15 days prior to the meeting due to the timing limitations imposed by the review and funding cycle.

Name of Committee: Center for Scientific Review Special Emphasis Panel, Bioengineering Research Partnerships.

Date: July 21, 2004.

Time: 12 p.m. to 1 p.m.

Agenda: To review and evaluate grant applications.

Place: National Institutes of Health, 6701 Rockledge Drive, Bethesda, MD 20892 (Telephone Conference Call).

Contact Person: Cheri Wiggs, PhD, Scientific Review Administrator, Center for Scientific Review, National Institutes of Health, 6701 Rockledge Drive, Room 3180, MSC 7848, Bethesda, MD 20892, (301) 435–1261, *wiggsc@csr.nih.gov.*

This notice is being published less than 15 days prior to the meeting due to the timing limitations imposed by the review and funding cycle.

Name of Committee: Center for Scientific Review Special Emphasis Panel, Shared Instruments.

Date: July 23, 2004.

Time: 8 a.m. to 4 p.m.

Agenda: To review and evaluate grant applications.

Place: Holiday Inn Select, Bethesda, 8120 Wisconsin Avenue, Bethesda, MD 20814.

Contact Person: Sally Ann Amero, PhD, Scientific Review Administrator, Center for

Scientific Review, National Institutes of Health, 6701 Rockledge Drive, Room 4190, MSC 7849, Bethesda, MD 20892, 301–435–1159, *ameros@csr.nih.gov.*

Name of Committee: Center for Scientific Review Special Emphasis Panel, MDCN Member Conflict SEP: Synaptic Function/Neurodevelopment.

Date: July 26, 2004.

Time: 8:30 a.m. to 5 p.m.

Agenda: To review and evaluate grant applications.

Place: Georgetown Suites, 1111 30th Street, NW., Washington, DC 20007.

Contact Person: Carole L. Jelsema, PhD, Chief and Scientific Review Administrator, MDCN Scientific Review Group, Center for Scientific Review, National Institutes of Health, 6701 Rockledge Drive, Room 4146, MSC 7850, Bethesda, MD 20892, 301–435–1248, *jelsemac@csr.nih.gov.*

Name of Committee: Center for Scientific Review Special Emphasis Panel, Hematology Bioengineering.

Date: July 27, 2004.

Time: 8:30 a.m. to 5 p.m.

Agenda: To review and evaluate grant applications.

Place: Bethesda Marriott, 6711 Democracy Boulevard, Bethesda, MD 20817.

Contact Person: Delia Tang, MD, Scientific Review Administrator, Center for Scientific Review, National Institutes of Health, 6701 Rockledge Drive, Room 4126, MSC 7802, Bethesda, MD 20892, 301–435–2506, *tangd@csr.nih.gov*

Name of Committee: Center for Scientific Review Special Emphasis Panel, Chronic Fatigue Syndrome, Fibromyalgia Syndrome, Temporomandibular Dysfunction SEP.

Date: July 27, 2004.

Time: 8:30 a.m. to 5 p.m.

Agenda: To review and evaluate grant applications.

Place: The River Inn, 924 Twenty-Fifth Street, NW., Washington, DC 20037.

Contact Person: J. Terrell Hoffeld, DDS, PhD, Dental Officer, USPHS, Center for Scientific Review, National Institutes of Health, 6701 Rockledge Drive, Room 4116, MSC 7816, Bethesda, MD 20892, 301–435–1781, *hoffeldt@csr.nih.gov.*

Name of Committee: Center for Scientific Review Special Emphasis Panel, Member Conflict Neuropharmacology—Physiology.

Date: July 27, 2004.

Time: 1 p.m. to 3 p.m.

Agenda: To review and evaluate grant applications.

Place: National Institutes of Health, 6701 Rockledge Drive, Bethesda, MD 20892, (Telephone Conference Call).

Contact Person: Carole L Jelsema, PhD, Chief and Scientific Review Administrator, MDCN Scientific Review Group, Center for Scientific Review, National Institutes of Health, 6701 Rockledge Drive, Room 4146, MSC 7850, Bethesda, MD 20892, 301–435–1248, *jelsemac@csr.nih.gov.*

Name of Committee: Center for Scientific Review Special Emphasis Panel, Environmental Neurotoxicology: Member Conflict IFCNA (03)M.

Date: July 27, 2004.

Time: 1 p.m. to 2:30 p.m.

Agenda: To review and evaluate grant applications.

Place: National Institutes of Health, 6701 Rockledge Drive, Bethesda, MD 20892, (Telephone Conference Call).

Contact Person: Christine L. Melchior, PhD, Scientific Review Administrator, Center for Scientific Review, National Institutes of Health, 6701 Rockledge Drive, Room 5176, MSC 7844, Bethesda, MD 20892, 301–435–1713, *melchioc@csr.nih.gov.*

Name of Committee: Center for Scientific Review Special Emphasis Panel, ZRG1 ONC–J (04)M: Telomeres, Telomerase and Chemotherapy: Bench to Bedside.

Date: July 27, 2004.

Time: 1 p.m. to 3 p.m.

Agenda: To review and evaluate grant applications.

Place: National Institutes of Health, 6701 Rockledge Drive, Bethesda, MD 20892, (Telephone Conference Call).

Contact Person: Martin L. Padarathsingh, PhD, Scientific Review Administrator, Center for Scientific Review, National Institutes of Health, 6701 Rockledge Drive, Room 6212, MSC 7804, Bethesda, MD 20892, 301–435–1717, *padaratm@csr.nih.gov.*

Name of Committee: Center for Scientific Review Special Emphasis Panel, Psuedo Tumor Cerebri Special Emphasis Study Panel.

Date: July 27, 2004.

Time: 2 p.m. to 3 p.m.

Agenda: To review and evaluate grant applications.

Place: National Institutes of Health, 6701 Rockledge Drive, Bethesda, MD 20892, (Telephone Conference Call).

Contact Person: David M. Armstrong, PhD, Scientific Review Administrator, Center for Scientific Review, National Institutes of Health, 6701 Rockledge Drive, Room 5194, MSC 7846, Bethesda, MD 20892, 301–435–1253, *armstrda@csr.nih.gov.*

Name of Committee: Center for Scientific Review Special Emphasis Panel, Estrogen Effect on Platelets.

Date: July 27, 2004.

Time: 2 p.m. to 4 p.m.

Agenda: To review and evaluate grant applications.

Place: National Institutes of Health, 6701 Rockledge Drive, Bethesda, MD 20892 (Telephone Conference Call).

Contact Person: Robert T. Su, PhD, Scientific Review Administrator, Center for Scientific Review, National Institutes of Health, 6701 Rockledge Drive, Room 4134, MSC 7802, Bethesda, MD 20892, (301) 435–1195, *sur@csr.nih.gov.*

Name of Committee: Center for Scientific Review Special Emphasis Panel, GI Epithelial Cell Differentiation.

Date: July 28, 2004.

Time: 11 a.m. to 1 p.m.

Agenda: To review and evaluate grant applications.

Place: National Institutes of Health, 6701 Rockledge Drive, Bethesda, MD 20892 (Telephone Conference Call).

Contact Person: Peter J. Perrin, PhD, Scientific Review Administrator, Center for Scientific Review, National Institutes of Health, 6701 Rockledge Drive, Room 2183, MSC 7818, Bethesda, MD 20892, (301) 435–0682, *perrinp@csr.nih.gov.*

Name of Committee: Center for Scientific Review Special Emphasis Panel, AIDS Clinical and Epidemiology.

Date: July 28, 2004.

Time: 11 a.m. to 2 p.m.

Agenda: To review and evaluate grant applications.

Place: National Institutes of Health, 6701 Rockledge Drive, Bethesda, MD 20892 (Telephone Conference Call).

Contact Person: Abraham P. Bautista, MS, PhD, Scientist Review Administrator, Center for Scientific Review, National Institutes of Health, 6701 Rockledge Drive, Room 5102, MSC 7852, Bethesda, MD 20892, (301) 435–1506, *bautista@csr.nih.gov.*

Name of Committee: Center for Scientific Review Special Emphasis Panel, Plasma Cell Development Genetics.

Date: July 28, 2004.

Time: 1 p.m. to 2 p.m.

Agenda: To review and evaluate grant applications.

Place: National Institutes of Health, 6701 Rockledge Drive, Bethesda, MD 20892 (Telephone Conference Call).

Contact Person: Calbert A. Laing, PhD, Scientific Review Administrator, Center for Scientific Review, National Institutes of Health, 6701 Rockledge Drive, Room 4210, MSC 7812, Bethesda, MD 20892, 301–435–1221, *laingc@csr.nih.gov.*

Name of Committee: Center for Scientific Review Special Emphasis Panel, Review of Ethics Applications.

Date: July 29, 2004.

Time: 10 a.m. to 1 p.m.

Agenda: To review and evaluate grant applications.

Place: National Institutes of Health, 6701 Rockledge Drive, Bethesda, MD 20892 (Telephone Conference Call).

Contact Person: Jose H. Guerrier, PhD, Scientific Review Administrator, Center for Scientific Review, National Institutes of Health, 6701 Rockledge Drive, Room 5218, MSC 7852, Bethesda, MD 20892, 301–435–1137, *guerriej@csr.nih.gov.*

Name of Committee: Center for Scientific Review Special Emphasis Panel, Cell-Free Replication of Hepatitis E Virus.

Date: July 29, 2004.

Time: 1 p.m. to 2 p.m.

Agenda: To review and evaluate grant applications.

Place: National Institutes of Health, 6701 Rockledge Drive, Bethesda, MD 20892 (Telephone Conference Call).

Contact Person: Joseph D. Mosca, PhD, Scientific Review Administrator, Center for Scientific Review, National Institutes of Health, 6701 Rockledge Drive, Room 5158, MSC 7808, Bethesda, MD 20892, (301) 435–2344, *moscajos@csr.nih.gov.*

Name of Committee: Center for Scientific Review Special Emphasis Panel, Assays and Methods Development.

Date: July 29, 2004.

Time: 1 p.m. to 5 p.m.

Agenda: To review and evaluate grant applications.

Place: National Institutes of Health, 6701 Rockledge Drive, Bethesda, MD 20892 (Telephone Conference Call).

Contact Person: Ping Fan, PhD, MD, Scientific Review Administrator, Center for Scientific Review, National Institutes of Health, 6701 Rockledge Drive, Room 5154, MSC 7840, Bethesda, MD 20892, 301–435–1740, *fanp@csr.nih.gov*.

Name of Committee: Center for Scientific Review Special Emphasis Panel, Animal Models of Drug Abuse.

Date: July 29, 2004.

Time: 2 p.m. to 3:30 p.m.

Agenda: To review and evaluate grant applications.

Place: National Institutes of Health, 6701 Rockledge Drive, Bethesda, MD 20892 (Telephone Conference Call).

Contact Person: Karen Sirocco, PhD, Scientific Review Administrator, Center for Scientific Review, National Institutes of Health, 6701 Rockledge Drive, Room 3176, MSC 7848, Bethesda, MD 20892, 301–435–0676, *siroccok@csr.nih.gov*.

Name of Committee: Center for Scientific Review Special Emphasis Panel, Blood Coagulation Factors.

Date: July 29, 2004.

Time: 2 p.m. to 4 p.m.

Agenda: To review and evaluate grant applications.

Place: National Institutes of Health, 6701 Rockledge Drive, Bethesda, MD 20892 (Telephone Conference Call).

Contact Person: Robert T. Su, PhD, Scientific Review Administrator, Center for Scientific Review, National Institutes of Health, 6701 Rockledge Drive, Room 4134, MSC 7802, Bethesda, MD 20892, (301) 435–1195, *sur@csr.nih.gov*.

Name of Committee: Center for Scientific Review Special Emphasis Panel, Review of ECDA Member Conflicts.

Date: July 29, 2004.

Time: 2 p.m. to 5 p.m.

Agenda: To review and evaluate grant applications.

Place: National Institutes of Health, 6701 Rockledge Drive, Bethesda, MD 20892 (Telephone Conference Call).

Contact Person: Valerie Durrant, PhD, Scientific Review Administrator, Center for Scientific Review, National Institutes of Health, 6701 Rockledge Drive, Room 3148, MSC 7770, Bethesda, MD 20892, (301) 435–3554, *durrantv@csr.nih.gov*.

Name of Committee: Center for Scientific Review Special Emphasis Panel, AIDS and Alternative Medicine.

Date: July 29, 2004.

Time: 12:30 p.m. to 1:30 p.m.

Agenda: To review and evaluate grant applications.

Place: National Institutes of Health, 6701 Rockledge Drive, Bethesda, MD 20892 (Telephone Conference Call).

Contact Person: Abraham P. Bautista, MS, PhD, Scientific Review Administrator, Center for Scientific Review, National Institutes of Health, 6701 Rockledge Drive, Room 5102, MSC 7852, Bethesda, MD 20892, (301) 435–1506, *bautista@csr.nih.gov*.

Name of Committee: Center for Scientific Review Special Emphasis Panel, Biophysics of Membrane Fusion.

Date: July 30, 2004.

Time: 8:30 a.m. to 5 p.m.

Agenda: To review and evaluate grant applications.

Place: One Washington Circle Hotel, One Washington Circle, NW., Washington, DC 20037.

Contact Person: Arnold Revzin, PhD, Scientific Review Administrator, Center for Scientific Review, National Institutes of Health, 6701 Rockledge Drive, Room 4184, MSC 7824, Bethesda, MD 20892, (301) 435–1153, *revzina@csr.nih.gov*.

Name of Committee: Center for Scientific Review Special Emphasis Panel, Structure of Blood Clotting Factors.

Date: July 30, 2004.

Time: 2 p.m. to 4 p.m.

Agenda: To review and evaluate grant applications.

Place: National Institutes of Health, 6701 Rockledge Drive, Bethesda, MD 20892 (Telephone Conference Call).

Contact Person: Robert T. Su, PhD, Scientific Review Administrator, Center for Scientific Review, National Institutes of Health, 6701 Rockledge Drive, Room 4134, MSC 7802, Bethesda, MD 20892, (301) 435–1195, *sur@csr.nih.gov*.

(Catalogue of Federal Domestic Assistance Program Nos. 93.306, Comparative Medicine; 93.333, Clinical Research, 93.306, 93.333, 93.337, 93.393–93.396, 93.837–93.844, 93.846–93.878, 93.892, 93.893, National Institutes of Health, HHS)

Dated: July 7, 2004.

LaVerne Y. Stringfield,

Director, Office of Federal Advisory Committee Policy.

[FR Doc. 04–16118 Filed 7–15–04; 8:45 am]

BILLING CODE 4140–01–M

DEPARTMENT OF HEALTH AND HUMAN SERVICES

National Institutes of Health

Center for Scientific Review; Notice of Closed Meetings

Pursuant to section 10(d) of the Federal Advisory Committee Act, as amended (5 U.S.C. Appendix 2), notice is hereby given of the following meetings.

The meetings will be closed to the public in accordance with the provisions set forth in sections 552b(c)(4) and 552b(c)(6), Title 5 U.S.C., as amended. The grant applications and the discussions could disclose confidential trade secrets or commercial property such as patentable material, and personal information concerning individuals associated with the grant applications, the disclosure of which would constitute a clearly unwarranted invasion of personal privacy.

Name of Committee: Center for Scientific Review Special Emphasis Panel, Cancer Genetics.

Date: July 14, 2004.

Time: 10 a.m. to 12 p.m.

Agenda: To review and evaluate grant applications.

Place: National Institutes of Health, 6701 Rockledge Drive, Bethesda, MD 20892 (Telephone Conference Call).

Contact Person: Camilla E. Day, PhD, Scientific Review Administrator, Center for Scientific Review, National Institutes of Health, 6701 Rockledge Drive, Room 2212, MSC 7890, Bethesda, MD 20892, (301) 435–1037, *dayc@csr.nih.gov*.

This notice is being published less than 15 days prior to the meeting due to the timing limitations imposed by the review and funding cycle.

Name of Committee: Center for Scientific Review Special Emphasis Panel, Glia and Neurodegeneration.

Date: July 15, 2004.

Time: 1:30 p.m. to 2:30 p.m.

Agenda: To review and evaluate grant applications.

Place: National Institutes of Health, 6701 Rockledge Drive, Bethesda, MD 20892 (Telephone Conference Call).

Contact Person: Toby Behar, PhD, Scientific Review Administrator, Center for Scientific Review, National Institutes of Health, 6701 Rockledge Drive, Room 4136, MSC 7850, Bethesda, MD 20892, (301) 435–4433, *behart@csr.nih.gov*.

This notice is being published less than 15 days prior to the meeting due to the timing limitations imposed by the review and funding cycle.

Name of Committee: Center for Scientific Review Special Emphasis Panel, Antioxidant Metabolism.

Date: July 23, 2004.

Time: 3 p.m. to 4 p.m.

Agenda: To review and evaluate grant applications.

Place: National Institutes of Health, 6701 Rockledge Drive, Bethesda, MD 20892 (Telephone Conference Call).

Contact Person: Richard G. Kostriken, PhD, Scientific Review Administrator, Center for Scientific Review, National Institutes of Health, 6701 Rockledge Drive, Room 3184, MSC 7808, Bethesda, MD 20892, 301–402–4454, *kostrikr@csr.nih.gov*.

This notice is being published less than 15 days prior to the meeting due to the timing limitations imposed by the review and funding cycle.

Name of Committee: Center for Scientific Review Special Emphasis Panel, Immune System, Atherosclerosis and Vascular Dysfunction.

Date: July 26, 2004.

Time: 1 p.m. to 3 p.m.

Agenda: To review and evaluate grant applications.

Place: National Institutes of Health, 6701 Rockledge Drive, Bethesda, MD 20892 (Telephone Conference Call).

Contact Person: Rajiv Kumar, PhD, Scientific Review Administrator, Center for Scientific Review, National Institutes of Health, 6701 Rockledge Drive, Room 4122, MSC 7802, Bethesda, MD 20892, 301–435–1212, *kumarra@csr.nih.gov*.

This notice is being published less than 15 days prior to the meeting due to the timing limitations imposed by the review and funding cycle.

Name of Committee: Center for Scientific Review Special Emphasis Panel, Renal Science.
Date: July 29, 2004.
Time: 1 p.m. to 3 p.m.
Agenda: To review and evaluate grant applications.
Place: National Institutes of Health, 6701 Rockledge Drive, Bethesda, MD 20892, (Telephone Conference Call).
Contact Person: M. Chris Langub, PhD, Scientific Review Administrator, Center for Scientific Review, National Institutes of Health, 6701 Rockledge Drive, Room 4112, MSC 7814, Bethesda, MD 20892, 301–496–8551, *langubm@csr.nih.gov.*

Name of Committee: Center for Scientific Review Special Emphasis Panel, Viral Immunity and Immunopathology.
Date: July 29, 2004.
Time: 1 p.m. to 3 p.m.
Agenda: To review and evaluate grant applications.
Place: National Institutes of Health, 6701 Rockledge Drive, Bethesda, MD 20892, (Telephone Conference Call).
Contact Person: Calbert A. Laing, PhD, Scientific Review Administrator, Center for Scientific Review, National Institutes of Health, 6701 Rockledge Drive, Room 4210, MSC 7812, Bethesda, MD 20892, 301–435–1221, *laingc@csr.nih.gov.*

Name of Committee: Center for Scientific Review Special Emphasis Panel, Member Conflict: Adaptive and Innate Immunity and O.I. in AIDS.
Date: July 30, 2004.
Time: 8:30 a.m. to 5 p.m.
Agenda: To review and evaluate grant applications.
Place: Hyatt Regency Bethesda, One Bethesda Metro Center, 7400 Wisconsin Avenue, Bethesda, MD 20814.
Contact Person: Mary Clare Walker, PhD, Scientific Review Administrator, Center for Scientific Review, National Institutes of Health, 6701 Rockledge Drive, Room 5104, MSC 7852, Bethesda, MD 20892, 301–435–1165, *walkermc@csr.nih.gov.*

Name of Committee: Center for Scientific Review Special Emphasis Panel, PKD Science.
Date: July 30, 2004.
Time: 1 p.m. to 2 p.m.
Agenda: To review and evaluate grant applications.
Place: National Institutes of Health, 6701 Rockledge Drive, Bethesda, MD 20892, (Telephone Conference Call).
Contact Person: M Chris Langub, PhD, Scientific Review Administrator, Center for Scientific Review, National Institutes of Health, 6701 Rockledge Drive, Room 4112, MSC 7814, Bethesda, MD 20892, 301–496–8551, *langubm@csr.nih.gov.*

Name of Committee: Center for Scientific Review Special Emphasis Panel, ZRG1 BDCN–B 02M: Member Conflict: Brain Disorders and Clinical Neurosciences.
Date: July 30, 2004.
Time: 12 p.m. to 1 p.m.
Agenda: To review and evaluate grant applications.
Place: National Institutes of Health, 6701 Rockledge Drive, Bethesda, MD 20892, (Telephone Conference Call).
*Contact Person:*William C. Benzing, PhD, Scientific Review Administrator, Center for Scientific Review, National Institutes of Health, 6701 Rockledge Drive, Room 5206, MSC 7846, Bethesda, MD 20892, 301–435–1254, *benzingw@csr.nih.gov.*

(Catalogue of Federal Domestic Assistance Program Nos. 93.306, Comparative Medicine; 93.333, Clinical Research, 93.306, 93.333, 93.337, 93.393–93.396, 93.837–93.844, 93.846–93.878, 93.892, 93.893, National Institutes of Health, HHS)

Dated: July 8, 2004.

LaVerne Y. Stringfield,

Director, Office of Federal Advisory Committee Policy.

[FR Doc. 04–16123 Filed 7–15–04; 8:45 am]

BILLING CODE 4140–01–M

DEPARTMENT OF HEALTH AND HUMAN SERVICES

National Institutes of Health

Prospective Grant of Exclusive License: Activation of Recombinant Diphtheria Toxin Fusion Proteins by Specific Proteases Highly Expressed on the Surface of Tumor Cells

AGENCY: National Institutes of Health, Public Health Service, DHHS.

ACTION: Notice.

SUMMARY: This is notice, in accordance with 35 U.S.C. 209(c)(1) and 37 CFR Part 404.7(a)(1)(i), that the Food and Drug Administration and the Department of Health and Human Services is contemplating the grant of an exclusive license to practice the inventions embodied in: E–331–2002/0: ''Activation of Recombinant Diphtheria Toxin Fusion Proteins By Specific Proteases Highly Expressed on the Surface of Tumor Cells'' filed as a PCT application on May 6, 2004, and claiming priority to U.S. provisional patent application 60/468,577, filed May 6, 2003, to Anjin Group, Inc., which is located in Cockeysville, MD. The patent rights in these inventions have been assigned to the United States of America.

The prospective exclusive license territory will be worldwide and the field of use may be limited to the treatment of cancers of the head and neck.

DATES: Only written comments and/or license applications which are received by the National Institutes of Health on or before September 14, 2004 will be considered.

ADDRESSES: Requests for copies of the patent, inquiries, comments and other materials relating to the contemplated exclusive license should be directed to: Brenda J. Hefti, Technology Licensing Specialist, Office of Technology Transfer, National Institutes of Health, 6011 Executive Boulevard, Suite 325, Rockville, MD 20852–3804; Telephone: (301) 435–4632; Facsimile: (301) 402–0220; E-mail: *heftib@mail.nih.gov.*

SUPPLEMENTARY INFORMATION: This invention relates to diphtheria toxin fusion proteins comprising a diphtheria toxin (DT) component, and a granulocyte-macrophage colony stimulating factor (GM–CSF) component, an interleukin 2 (IL–2) component, or an epidermal growth factor (EGF) component. The DT toxin fusion proteins are toxic to cells expressing: (1) Either GM–CSF receptors, IL–2 receptors, or EGF receptors, and (2) either matrix metalloproteinases or urokinase plasminogen activator, on their surface. These DT toxin fusion proteins are particularly useful for selective methods of treating cancers in which the cancers overexpress (1) GM–CSF receptors, IL–2 receptors, or EGF receptors, and (2) either matrix metalloproteinases or urokinase plasminogen activator, on their surface.

The prospective exclusive license will be royalty-bearing and will comply with the terms and conditions of 35 U.S.C. 209 and 37 CFR Part 404.7. The prospective exclusive license may be granted unless within sixty (60) days from the date of this published notice, the NIH receives written evidence and argument that establish that the grant of the license would not be consistent with the requirements of 35 U.S.C. 209 and 37 CFR Part 404.7.

Applications for a license in the field of use filed in response to this notice will be treated as objections to the grant of the contemplated exclusive license. Comments and objections submitted to this notice will not be made available for public inspection and, to the extent permitted by law, will not be released under the Freedom of Information Act, 5 U.S.C. 552.

Dated: July 6, 2004.

Steven M. Ferguson,

Director, Division of Technology Development and Transfer, Office of Technology Transfer, National Institutes of Health.

[FR Doc. 04–16125 Filed 7–15–04; 8:45 am]

BILLING CODE 4140–01–P

DEPARTMENT OF HEALTH AND HUMAN SERVICES

Substance Abuse and Mental Health Services Administration

Agency Information Collection Activities: Submission for OMB Review; Comment Request

Periodically, the Substance Abuse and Mental Health Services Administration (SAMHSA) will publish a summary of information collection requests under OMB review, in compliance with the Paperwork Reduction Act (44 U.S.C. chapter 35). To request a copy of these documents, call the SAMHSA Reports Clearance Officer on (301) 443–7978.

Proposed Project: The Evaluation of the Buprenorphine Waiver Program—Survey of Physicians with Waivers—New—The Substance Abuse and Mental Health Services Administration (SAMHSA), Center for Substance Abuse Treatment (CSAT), Division of Pharmacologic Therapies, (DPT), is evaluating a program that permits office-based physicians to obtain Waivers from the requirements of the Narcotic Addict Treatment Act of 1974 (21 U.S.C. 823(g)). Under the Drug Addiction Treatment Act of 2000 (21 U.S.C. 823(g)(2)), the Waiver Program permits qualified physicians to dispense or prescribe schedule III, IV, and V narcotic drugs or combinations of such drugs approved by the Food and Drug Administration (FDA) for the treatment of addiction to opiates. Subutex and Suboxone, two formulations of buprenorphine, a schedule III narcotic drug, were approved by the FDA in October 2002, for the treatment of opiate addiction and are now being used under the Waiver Program. The Drug Abuse Treatment Act (DATA) also specifies that the Secretary of the Department of Health and Human Services may make determinations concerning whether: (1) Treatments provided under the Waiver Program have been effective forms of maintenance treatment and detoxification treatment in clinical settings; (2) the Waiver Program has significantly increased (relative to the beginning of such period) the availability of maintenance treatment and detoxification treatment; and, (3) the Waiver Program has adverse consequences for the public health. This Evaluation will provide data to: Inform the determinations listed in DATA; describe the impact of the Waiver-based treatment on the existing treatment system; guide and refine the processing/monitoring system being developed and maintained by CSAT/DPT; and inform future research and policy concerning the mainstreaming of addiction treatment.

The evaluation by SAMHSA/CSAT of the Buprenorphine Waiver Program will be accomplished using three survey efforts. The first survey, now completed, was a mail survey of addiction-specialist physicians from the American Society of Addiction Medicine (ASAM), the American Academy of Addiction Psychiatry (AAAP), and the American Osteopathic Academy of Addiction Medicine (AOAAM). The survey provided early data about the availability, effectiveness, and public health consequences associated with buprenorphine treatment under the Waiver Program. A second longitudinal telephone study, now being conducted, focuses on patient responses to buprenorphine, including its effectiveness and availability.

The third survey, the subject of this **Federal Register** notice, focuses on the clinical experience of waivered physicians who are currently prescribing buprenorphine and who represent a range of medical specialties. The survey is designed to identify broad clinical issues in providing buprenorphine treatment, particularly whether physicians (1) perceive it to be an effective treatment, (2) are aware of important moderators of treatment effectiveness, such as specific clinical subpopulations or particular clinical practices (*e.g.* detoxification appearing to be more effective than long-term maintenance) and (3) perceive significance to its use, including clinical, financial, administrative, and logistic factors. The survey is also designed to identify issues related to treatment availability and possible adverse public health consequences associated with the drug.

The estimated response burden over a period of one year is summarized below.

Respondents	Number of respondents	Responses per respondent	Hours per response	Total hour burden
All Physicians Who Have Submitted a Waiver	1,833	1	.42	770

Written comments and recommendations concerning the proposed information collection should be sent by August 16, 2004, to: SAMHSA Desk Officer, Human Resources and Housing Branch, Office of Management and Budget, New Executive Office Building, Room 10235, Washington, DC 20503; due to potential delays in OMB's receipt and processing of mail sent through the U.S. Postal Service, respondents are encouraged to submit comments by fax to: 202–395–6974.

Dated: July 12, 2004.

Anna Marsh,

Executive Officer, SAMHSA.

[FR Doc. 04–16171 Filed 7–15–04; 8:45 am]

BILLING CODE 4162–20–P

DEPARTMENT OF HOMELAND SECURITY

Environmental Planning Program

AGENCY: Department of Homeland Security.

ACTION: Reopening of comment period for Draft Environmental Directive.

SUMMARY: The Department of Homeland Security (DHS) is issuing this notice to advise the public that DHS is reopening the comment period for the draft directive containing policy and procedures for implementing the National Environmental Policy Act of 1969 (NEPA), as amended, Executive Order 11514, as amended, Executive Order 12114, and Council on Environmental Quality (CEQ) regulations for implementing the procedural provisions of NEPA (40 CFR parts 1500–1508).

DATES: Comments and related material must be received by August 16, 2004.

ADDRESSES: Please submit your comments by only one of the following means:

(1) By mail to: Environmental Planning, Office of Safety and Environmental Programs, Management Directorate, Department of Homeland Security, Washington, DC 20528.

(2) By hand delivery to: Environmental Planning, Office of Safety and Environmental Programs, Management Directorate, Department of Homeland Security, Anacostia Naval Annex, Building 410, 245 Murray Lane, SW., Washington, DC 20528.

(3) By Fax to: 202–772–9749.

(4) By e-mail to: *ADMIN-S&E@hq.dhs.gov.*

In choosing among these means, please give due regard to difficulties and delays associated with delivery of mail through the U.S. Postal Service.

FOR FURTHER INFORMATION CONTACT:

(1) By telephone: David Reese, Office of Safety and Environmental Programs, Department of Homeland Security, 202–692–4224.

(2) By internet: A complete copy of the June 14, 2004 **Federal Register** notice, all comments received before the close of the comment period, and a summary and details of the support for the proposed categorical exclusions can be accessed at the following URL: *http://www.dhs.gov/dhspublic/interapp/editorial/editorial_0468.xml.*

SUPPLEMENTARY INFORMATION:

Request for Comments

The Department of Homeland Security (DHS) encourages interested persons to submit written data, views, or comments. Persons submitting comments should please include their name, address, and other appropriate contact information. You may submit your comments and material by one of the means listed under **ADDRESSES**. If you submit them by mail or hand delivery, submit them in an unbound format, no larger than 8½ x 11 inches, suitable for copying and electronic filing. If you submit them by mail and would like to know that they were received, please enclose a stamped, self-addressed postcard or envelope. DHS will consider all comments received during the comment period.

On June 14, 2004, DHS issued a notice in the **Federal Register** seeking public comment on its draft directive that would implement procedures for complying with the National Environmental Policy Act (NEPA). The comment period expired on July 14, 2004. DHS received several requests to reopen the public comment period and to make available to commenters additional information relating to the directive.

Additional material supporting the draft Categorical Exclusions in the DHS directive is now available for comment. This material can be reviewed on the internet at the following URL: *http://www.dhs.gov/dhspublic/interapp/editorial/editorial_0468.xml.*

In order to give the public the opportunity to review and comment on this additional information, DHS has decided to reopen the public comment period for another thirty days, until August 16, 2004.

Janet Hale,

Under Secretary for Management.

[FR Doc. 04–16354 Filed 7–15–04; 8:45 am]

BILLING CODE 4410–10–P

DEPARTMENT OF HOMELAND SECURITY

Federal Emergency Management Agency

[FEMA–1520–DR]

Indiana; Amendment No. 6 to Notice of a Major Disaster Declaration

AGENCY: Federal Emergency Management Agency, Emergency Preparedness and Response Directorate, Department of Homeland Security.

ACTION: Notice.

SUMMARY: This notice amends the notice of a major disaster declaration for the State of Indiana (FEMA–1520–DR), dated June 3, 2004, and related determinations.

DATES: *Effective Date:* July 7, 2004.

FOR FURTHER INFORMATION CONTACT: Magda Ruiz, Recovery Division, Federal Emergency Management Agency, Washington, DC 20472, (202) 646–2705.

SUPPLEMENTARY INFORMATION: The notice of a major disaster declaration for the State of Indiana is hereby amended to include the following area among those areas determined to have been adversely affected by the catastrophe declared a major disaster by the President in his declaration of June 3, 2004:

Fountain County for Public Assistance (already designated for Individual Assistance.)

(The following Catalog of Federal Domestic Assistance Numbers (CFDA) are to be used for reporting and drawing funds: 97.030, Community Disaster Loans; 97.031, Cora Brown Fund Program; 97.032, Crisis Counseling; 97.033, Disaster Legal Services Program; 97.034, Disaster Unemployment Assistance (DUA); 97.046, Fire Management Assistance; 97.048, Individual and Household Housing; 97.049, Individual and Household Disaster Housing Operations; 97.050 Individual and Household Program-Other Needs, 97.036, Public Assistance Grants; 97.039, Hazard Mitigation Grant Program.)

Michael D. Brown,

Under Secretary, Emergency Preparedness and Response, Department of Homeland Security.

[FR Doc. 04–16159 Filed 7–15–04; 8:45 am]

BILLING CODE 9110–10–P

DEPARTMENT OF HOMELAND SECURITY

Federal Emergency Management Agency

[FEMA–1517–DR]

Nebraska; Amendment No. 4 to Notice of a Major Disaster Declaration

AGENCY: Federal Emergency Management Agency, Emergency Preparedness and Response Directorate, Department of Homeland Security.

ACTION: Notice.

SUMMARY: This notice amends the notice of a major disaster declaration for the State of Nebraska (FEMA–1517–DR), dated May 25, 2004, and related determinations.

EFFECTIVE DATES: July 7, 2004.

FOR FURTHER INFORMATION CONTACT: Magda Ruiz, Recovery Division, Federal Emergency Management Agency, Washington, DC 20472, (202) 646–2705.

SUPPLEMENTARY INFORMATION: The notice of a major disaster declaration for the State of Nebraska is hereby amended to include the following areas among those areas determined to have been adversely affected by the catastrophe declared a major disaster by the President in his declaration of May 25, 2004:

Madison and Thurston Counties for Public Assistance

(The following Catalog of Federal Domestic Assistance Numbers (CFDA) are to be used for reporting and drawing funds: 97.030, Community Disaster Loans; 97.031, Cora Brown Fund Program; 97.032, Crisis Counseling; 97.033, Disaster Legal Services Program; 97.034, Disaster Unemployment Assistance (DUA); 97.046, Fire Management Assistance; 97.048, Individual and Household Housing; 97.049, Individual and Household Disaster Housing Operations; 97.050 Individual and Household Program—Other Needs, 97.036, Public Assistance Grants; 97.039, Hazard Mitigation Grant Program.)

Michael D. Brown,

Under Secretary, Emergency Preparedness and Response, Department of Homeland Security.

[FR Doc. 04–16160 Filed 7–15–04; 8:45 am]

BILLING CODE 9110–10–P

DEPARTMENT OF HOMELAND SECURITY

Federal Emergency Management Agency

[FEMA–1515–DR]

North Dakota; Amendment No. 3 to Notice of a Major Disaster Declaration

AGENCY: Federal Emergency Management Agency, Emergency Preparedness and Response Directorate, Department of Homeland Security.

ACTION: Notice.

SUMMARY: This notice amends the notice of a major disaster declaration for the State of North Dakota (FEMA–1515-DR), dated May 5, 2004, and related determinations.

DATES: Effective July 9, 2004.

FOR FURTHER INFORMATION CONTACT: Magda Ruiz, Recovery Division, Federal Emergency Management Agency, Washington, DC 20472, (202) 646–2705.

SUPPLEMENTARY INFORMATION: The notice of a major disaster declaration for the State of North Dakota is hereby amended to include the following areas among those areas determined to have been adversely affected by the catastrophe declared a major disaster by the President in his declaration of May 5, 2004:

McHenry and Pierce Counties and the Turtle Mountain Indian Reservation for Public Assistance.

(The following Catalog of Federal Domestic Assistance Numbers (CFDA) are to be used for reporting and drawing funds: 97.030, Community Disaster Loans; 97.031, Cora Brown Fund Program; 97.032, Crisis Counseling; 97.033, Disaster Legal Services Program; 97.034, Disaster Unemployment Assistance (DUA); 97.046, Fire Management Assistance; 97.048, Individual and Household Housing; 97.049, Individual and Household Disaster Housing Operations; 97.050 Individual and Household Program-Other Needs, 97.036, Public Assistance Grants; 97.039, Hazard Mitigation Grant Program.)

Michael D. Brown,

Under Secretary, Emergency Preparedness and Response, Department of Homeland Security.

[FR Doc. 04–16161 Filed 7–15–04; 8:45 am]

BILLING CODE 9110–10–P

DEPARTMENT OF HOMELAND SECURITY

Federal Emergency Management Agency

[FEMA–1519–DR]

Ohio; Amendment No. 7 to Notice of a Major Disaster Declaration

AGENCY: Federal Emergency Management Agency, Emergency Preparedness and Response Directorate, Department of Homeland Security.

ACTION: Notice.

SUMMARY: This notice amends the notice of a major disaster declaration for the State of Ohio (FEMA–1519–DR), dated June 3, 2004, and related determinations.

DATES: *Effective Date:* July 7, 2004.

FOR FURTHER INFORMATION CONTACT: Magda Ruiz, Recovery Division, Federal Emergency Management Agency, Washington, DC 20472, (202) 646–2705.

SUPPLEMENTARY INFORMATION: The notice of a major disaster declaration for the State of Ohio is hereby amended to include the following areas among those areas determined to have been adversely affected by the catastrophe declared a major disaster by the President in his declaration of June 3, 2004:

Harrison and Holmes Counties for Individual Assistance (already designated for Public Assistance.)

(The following Catalog of Federal Domestic Assistance Numbers (CFDA) are to be used for reporting and drawing funds: 97.030, Community Disaster Loans; 97.031, Cora Brown Fund Program; 97.032, Crisis Counseling; 97.033, Disaster Legal Services Program; 97.034, Disaster Unemployment Assistance (DUA); 97.046, Fire Management Assistance; 97.048, Individual and Household Housing; 97.049, Individual and Household Disaster Housing Operations; 97.050 Individual and Household Program-Other Needs, 97.036, Public Assistance Grants; 97.039, Hazard Mitigation Grant Program.)

Michael D. Brown,

Under Secretary, Emergency Preparedness and Response, Department of Homeland Security.

[FR Doc. 04–16158 Filed 7–15–04; 8:45 am]

BILLING CODE 9110–10–P

DEPARTMENT OF HOUSING AND URBAN DEVELOPMENT

[Docket No. FR–4901–N–29]

Federal Property Suitable as facilities To Assist the Homeless

AGENCY: Office of the Assistant Secretary for Community Planning and Development, HUD.

ACTION: Notice.

SUMMARY: This Notice identifies unutilized, underutilized, excess, and surplus Federal property reviewed by HUD for suitability for possible use to assist the homeless.

EFFECTIVE DATE: July 16, 2004.

FOR FURTHER INFORMATION CONTACT: Kathy Burruss, Department of Housing and Urban Development, Room 7262, 451 Seventh Street SW., Washington, DC 20410; telephone (202) 708–1234; TTY number for the hearing- and speech-impaired (202) 708–2565, (these telephone numbers are not toll-free), or call the toll-free Title V information line at 1–800–927–7588.

SUPPLEMENTARY INFORMATION: In accordance with the December 12, 1988 court order in *National Coalition for the Homeless* v. *Veterans Administration,* No. 88–2503–OG (D.D.C.), HUD publishes a Notice, on a weekly basis, identifying unutilized, underutilized, excess and surplus Federal buildings and real property that HUD has reviewed for suitability for use to assist the homeless. Today's Notice is for the purpose of announcing that no additional properties have been determined suitable or unsuitable this week.

Dated: July 8, 2004.

Mark R. Johnston,

Director of Special Needs Assistance Programs.

[FR Doc. 04–16007 Filed 7–15–04; 8:45 am]

BILLING CODE 4210–29–M

DEPARTMENT OF THE INTERIOR

Fish and Wildlife Service

Information Collection To Be Submitted to the Office of Management and Budget (OMB) for Approval Under the Paperwork Reduction Act; Special Use Permit Applications on National Wildlife Refuges Outside Alaska

AGENCY: Fish and Wildlife Service, Interior.

ACTION: Notice; request for comments.

SUMMARY: We will submit the collection of information listed below to OMB for

approval under the provisions of the Paperwork Reduction Act of 1995. You may obtain copies of specific information collection requirements and explanatory material by contacting our Information Collection Clearance Officer at the address or phone number listed below.

DATES: You must submit comments on or before September 14, 2004.

ADDRESSES: Send your comments on the requirement to the Information Collection Clearance Officer, U.S. Fish and Wildlife Service, 4401 N. Fairfax Drive, Suite 222, Arlington, Virginia 22203; (703) 358–2269 (fax); or *Hope_Grey@fws.gov* (e-mail).

FOR FURTHER INFORMATION CONTACT: To request a copy of the information collection request, explanatory information or related forms, contact Hope Grey at (703) 358–2482 or electronically to *Hope_Grey@fws.gov.*

SUPPLEMENTARY INFORMATION: The Office of Management and Budget (OMB) regulations at 5 CFR 1320, which implement provisions of the Paperwork Reduction Act of 1995 (44 U.S.C. 3501 *et seq.*), require that interested parties and affected agencies have an opportunity to comment on information collection and recordkeeping activities (*see* CFR 1380.8(d)). The U.S. Fish and Wildlife Service (we, or the Service) plans to submit a request to OMB to renew its approval of a collection of information related to special use permit applications on national wildlife refuges outside of Alaska. The collection is currently approved under OMB control number 1018–0102, which expires November 30, 2004. We are requesting a 3-year term of approval for these collection activities.

Federal agencies may not conduct or sponsor, and a person is not required to respond to, a collection of information unless it displays a currently valid OMB control number.

The National Wildlife Refuge System Improvement Act of 1997 that amends the National Wildlife Refuge Administration Act of 1966 (16 U.S.C. 668dd–ee) requires that we authorize economic privileges on any national wildlife refuge by permit only when the activity will be compatible with and contribute to refuge purposes (50 CFR 29.21). We will provide the permit applications as requested by interested citizens. We will use information provided on the required written forms and/or verbal applications to ensure that the applicant is eligible for the permit. We make provision in our general refuge regulations for public entry for specialized purposes, including economic activities such as the operation of guiding and other visitor services on refuges by concessionaires or cooperators under the appropriate legal instrument or special use permits (50 CFR 25.41, 25.61, 26.36, 27.71, 27.91, 27.97, 29.1, 29.2, 30.11, 31.2, 31.13, 31.14, and 31.16). These regulations provide the authorities and procedures for allowing permits on refuges outside of Alaska.

We use this permit to authorize such items farming operations (haying and grazing, 50 CFR 29.2), beneficial management tools that we use to provide the best habitat possible on some refuges (50 CFR 30.11, 31.14, 31.16), recreational visitor service operations (50 CFR 25.41 and 25.61), commercial filming (50 CFR 27.71), other commercial activities (50 CFR 29.1), research, and other noncommercial activities (50 CFR 26.36). We will issue permits for a specific period as determined by the type and location of the use or visitor service provided.

Title: Special Use Permit Applications on National Wildlife Refuges Outside Alaska.

OMB Control Number: 1018–0102.

Service Form Number: 3–1383.

Frequency of Collection: On occasion.

Description of Respondents: Individuals and households; business and other for-profit organizations; nonprofit institutions; farms; and State, local or tribal governments.

Total Annual Responses: We have 528 national wildlife refuges and 37 wetland management districts outside the State of Alaska. We anticipate that each unit will authorize approximately 25 permits each year. This is a total of 14,125 permits.

Total Annual Burden: We estimate that it takes an hour to complete the application requirements. Therefore the annual burden estimate in hours is 14,125.

Your comments are invited on: (1) Whether this collection of information is necessary for us to properly perform our functions, including whether this information will have practical utility; (2) the accuracy of our estimates of burden, including the validity of the methodology and assumptions we use; (3) ways to enhance the quality, utility, and clarity of the information we are proposing to collect; and (4) ways to minimize the burden of the collection of information on those who are to respond, including through the use of appropriate automated, electronic, mechanical, or other technological collection techniques or other forms of information technology.

Dated: July 8, 2004.

Anissa Craghead,

Service Information Collection Officer.

[FR Doc. 04–16218 Filed 7–15–04; 8:45 am]

BILLING CODE 4310–55–P

DEPARTMENT OF THE INTERIOR

Fish and Wildlife Service

Draft Comprehensive Conservation Plan and Environmental Assessment for Squaw Creek National Wildlife Refuge (NWR), Mound City, MO

AGENCY: Fish and Wildlife Service, Interior.

ACTION: Notice of availability.

SUMMARY: The U.S. Fish and Wildlife Service (Service) announces that the draft Comprehensive Conservation Plan (CCP) and Environmental Assessment (EA) is available for Squaw Creek NWR, Mound City, Missouri. The CCP was prepared pursuant to the National Wildlife Refuge System Administration Act of 1966, as amended by the National Wildlife Refuge System Improvement Act of 1997, and the National Environmental Policy Act of 1969, and using the preferred alternative, goals and objectives, we describe how the Service intends to manage these refuges over the next 15 years.

DATES: Comments must be received by August 27, 2004.

ADDRESSES: Copies of the draft CCP and EA are available on compact diskette or hard copy, you may obtain a copy by writing to: Squaw Creek National Wildlife Refuge, P.O. Box 158, Mound City, Missouri 64470 or you may access and download a copy at this Web site: *http://midwest.fws.gov/planning/squawcreek/index.html.*

FOR FURTHER INFORMATION CONTACT: Ron Bell, Refuge Manager, Squaw Creek NWR at (660) 442–3187.

SUPPLEMENTARY INFORMATION: Comprehensive conservation plans guide management decisions over the course of 15 years.

The planning process for Squaw Creek NWR began in 1999. Five management alternatives were considered. Alternative D, Optimizing Wildlife Habitat and Fish and Wildlife Populations With Enhanced Levels of Wildlife-dependent Recreation is the preferred alternative. This alternative seeks to maximize wildlife habitat and population management practices and opportunities without adversely impacting current levels of wildlife-dependent recreational opportunities. There will be no expansion of existing authorized boundaries.

The CCP will identify and increase wildlife-dependent recreational opportunities available to the public including: Initiating a managed spring snow goose hunt; investigating the potential for a fishing access area and a white-tailed deer hunt for physically challenged visitors; and enhancing trails for wildlife observation and photography, and environmental education and interpretation.

Dated: February 20, 2004.

Editorial Note: This document was received in the Office of the Federal Register on July 13, 2004.

Charles M. Wooley,

Acting Regional Director.

[FR Doc. 04–16172 Filed 7–15–04; 8:45 am]

BILLING CODE 4310–55–P

DEPARTMENT OF THE INTERIOR

Fish and Wildlife Service

Receipt of Applications for Permit

AGENCY: Fish and Wildlife Service, Interior.

ACTION: Notice of receipt of applications for permit.

SUMMARY: The public is invited to comment on the following applications to conduct certain activities with endangered species and/or marine mammals.

DATES: Written data, comments or requests must be received by August 16, 2004.

ADDRESSES: Documents and other information submitted with these applications are available for review, subject to the requirements of the Privacy Act and Freedom of Information Act, by any party who submits a written request for a copy of such documents within 30 days of the date of publication of this notice to: U.S. Fish and Wildlife Service, Division of Management Authority, 4401 North Fairfax Drive, Room 700, Arlington, Virginia 22203; fax 703/358–2281.

FOR FURTHER INFORMATION CONTACT: Division of Management Authority, telephone 703/358–2104.

SUPPLEMENTARY INFORMATION:

Endangered Species

The public is invited to comment on the following applications for a permit to conduct certain activities with endangered species. This notice is provided pursuant to section 10(c) of the Endangered Species Act of 1973, *as amended* (16 U.S.C. 1531, *et seq.*). Written data, comments, or requests for copies of these complete applications should be submitted to the Director (address above).

PRT–088191

Applicant: Michael H. Keith, Woodinville, WA.

The applicant requests a permit to import the sport-hunted trophy of one male bontebok (*Damaliscus pygargus pygargus*) culled from a captive herd maintained under the management program of the Republic of South Africa, for the purpose of enhancement of the survival of the species.

PRT–089717

Applicant: John A. Kemhadjian, Encino, CA.

The applicant requests a permit to import the sport-hunted trophy of one male bontebok (*Damaliscus pygargus pygargus*) culled from a captive herd maintained under the management program of the Republic of South Africa, for the purpose of enhancement of the survival of the species.

PRT–078965

Applicant: Omaha's Henry Doorly Zoo, Omaha, NE.

The applicant requests a permit to import one pair of captive-bred Manchurian cranes (*Grus japonensis*) from the Shizuoka Municipal Nihondaira Zoo for the purpose of enhancement of the survival of the species through captive propagation and conservation education.

Marine Mammals

The public is invited to comment on the following applications for a permit to conduct certain activities with marine mammals. The applications were submitted to satisfy requirements of the Marine Mammal Protection Act of 1972, *as amended* (16 U.S.C. 1361 *et seq.*), and the regulations governing marine mammals (50 CFR part 18). Written data, comments, or requests for copies of the complete applications or requests for a public hearing on these applications should be submitted to the Director (address above). Anyone requesting a hearing should give specific reasons why a hearing would be appreciate. The holding of such a hearing is at the discretion of the Director.

PRT–090176

Applicant: Leland M. Stahelin, West Chicago, IL.,

The applicant requests a permit to import a polar bear (*Ursus maritimus*) sport hunted from the Lancaster Sound polar bear population in Canada for personal use.

PRT–090177

Applicant: Michael McMaster, Glen Ellyn, IL.

The applicant requests a permit to import a polar bear (*Ursus maritimus*) sport hunted from the Lancaster Sound polar bear population in Canada for personal use.

PRT–090321

Applicant: Michael K. McKenzie, Sulphur Springs, TX.

The applicant requests a permit to import a polar bear (*Ursus maritimus*) sport hunted from the Lancaster Sound polar bear population in Canada for personal use.

Dated: July 2, 2004.

Monica Farris,

Senior Permit Biologist, Branch of Permits, Division of Management Authority.

[FR Doc. 04–16217 Filed 7–15–04; 8:45 am]

BILLING CODE 4310–55–P

DEPARTMENT OF THE INTERIOR

Bureau of Indian Affairs

Indian Gaming

AGENCY: Bureau of Indian Affairs, Interior.

ACTION: Notice of deemed approved Slots Only Compact.

SUMMARY: This notice publishes a deemed approved Slots Only Compact between the Washoe Tribe of Nevada and California and the State of Nevada. Under the Indian Gaming Regulatory Act of 1988, the Secretary of the Interior is required to publish notice in the **Federal Register** approved Tribal-State compacts for the purpose of engaging in Class III gaming activities on Indian lands.

DATES: Effective July 16, 2004.

FOR FURTHER INFORMATION CONTACT: George T. Skibine, Director, Office of Indian Gaming Management, Office of the Deputy Assistant Secretary—Policy and Economic Development, Washington, DC 20240, (202) 219–4066.

SUPPLEMENTARY INFORMATION: Under section 11 of the Indian Gaming Regulatory Act of 1988 (IGRA) Public Law 100–497, 25 U.S.C. 2710, the Secretary of the Interior shall publish in the **Federal Register** notice of approved Tribal-State compacts for the purpose of engaging in Class III gaming activities on Indian lands. The Slots Only Compact between the Washoe Tribe of Nevada and California and the State of Nevada is deemed approved. By the terms of IGRA, the Compact is considered approved, but only to the

extent the compact is consistent with the provisions of IGRA.

The Principal Deputy Assistant Secretary—Indian Affairs, Department of the Interior, through her delegated authority, is publishing notice that the Slots Only Compact between the Washoe Tribe of Nevada and California and the State of Nevada is now in effect.

Dated: June 29, 2004.

Aurene M. Martin,

Principal Deputy Assistant Secretary—Indian Affairs.

[FR Doc. 04–16199 Filed 7–15–04; 8:45 am]

BILLING CODE 4310–4N–P

DEPARTMENT OF THE INTERIOR

Bureau of Land Management

[UT070–1610–011J]

Notice of Availability for the Draft Resource Management Plan (RMP) and Environmental Impact Statement (EIS) for the Price Field Office Planning Area in Carbon and Emery Counties, UT

AGENCY: Bureau of Land Management, Interior.

ACTION: Notice of availability.

SUMMARY: In accordance with the National Environmental Policy Act (NEPA) of 1969, the Federal Land Policy and Management Act of 1976 (FLPMA), and regulatory requirements, a Draft RMP/EIS has been prepared for the Price Field Office planning area and is available for a 90-day public review and comment period. The Draft RMP/EIS may be viewed and downloaded in PDF format at the project Web site at *www.pricermp.com.* Copies of the Draft RMP/EIS will also be available for distribution and review during the comment period at the BLM Price Field Office, at the address shown below.

DATES: Written comments on the Draft RMP/EIS will be accepted October 14, 2004. Future public meetings and any other public-involvement activities will be announced at least 15 days in advance through public notices, local media news releases, mailings, and the project Web site at: *www.pricermp.com.* Locations of the public meetings are: Salt Lake City, Price, Green River, and Castle Dale, Utah.

ADDRESSES: Written comments should be sent to: Price Field Office RMP Comments, Attention: Floyd Johnson, Price Field Office, Bureau of Land Management, 125 South 600 West, Price, Utah 84501. Comments may also be made electronically at: *www.pricermp.com.* Comments, including names and addresses of respondents, will be available for public review at the BLM Price Field Office, 125 South 600 West, Price, Utah during normal business hours (8 a.m. to 4:30 p.m., except weekends and holidays).

FOR FURTHER INFORMATION CONTACT: For further information and/or to have your name added to the planning project mailing list, visit the Web site shown above. You may also contact Floyd Johnson, Assistant Field Manager, Bureau of Land Management, Price Field Office, 125 South 600 West, Price, Utah 84501, telephone: (435) 636–3600, or e-mail through the Web site: *www.pricermp.com.*

SUPPLEMENTARY INFORMATION: The planning area includes all of the public land and Federal mineral ownership managed by the Price Field Office in Carbon and Emery Counties, Utah. The planning area encompasses public lands currently managed under the Price River Resource Area Management Framework Plan and the San Rafael RMP. This area includes approximately 2.5 million acres of BLM-administered surface lands and 2.8 million acres of Federal mineral lands under Federal, State, and private surface in the area. The decisions of the Price RMP will only apply to BLM-administered public lands and Federal mineral estate. The Draft RMP/EIS addresses alternatives and provides management guidance, monitoring, and impact analysis of the alternatives. The alternatives present different management balances between the various resources and uses. This planning effort will replace the Price River Resource Area Management Framework Plan (1983, 1989) and the San Rafael RMP (1991). Once approved, the Record of Decision (ROD) for the Price Field Office RMP will supercede all existing management plans for the planning area. In order to receive full consideration, comments should focus on specific management actions being considered and the adequacy of analysis. All submissions from organizations or businesses will be made available for public inspection in their entirety. Individuals may request confidentiality with respect to their name, address, and phone number. If you wish to have your name or street address withheld from public review, or from disclosure under the Freedom of Information Act, the first line of the comment should start with the words ''CONFIDENTIALITY REQUESTED'' in uppercase letters in order for BLM to comply with your request. Such requests will be honored to the extent allowed by law. Comment contents will not be kept confidential. Responses to the comments will be published as part of the Final RMP/EIS. The Draft RMP/EIS contains five alternatives (including the No Action Alternative). Major issues considered are: management of recreation, travel planning and route designation, oil and gas resources, rangeland health, special designation areas, wildlife, and air and water quality. The area covered by the Price RMP contains coal resources that have been classified by the Bureau of Land Management to be included within a Known Recoverable Coal Resource Area. The 43 CFR 3420.1–2 provides an opportunity for the public to identify any interest in developing these resources; therefore the Bureau of Land Management is issuing a Call for Coal Information. Industry, State and local governments, or the general public is invited to submit information on lands within the Price Field Office that should be considered for leasing and describe why these lands should be considered. Proprietary data marked as confidential may be submitted in response to this call; however, all such proprietary data should be submitted only to James Kohler, Chief, Branch of Solid Minerals, Utah State Office, Bureau of Land Management, P.O. Box 45155, Salt Lake City, UT 84145–0155. Data marked as confidential shall be treated in accordance with the laws and regulations governing confidentiality of such information.

Gene R. Terland,

Associate State Director.

[FR Doc. 04–15894 Filed 7–15–04; 8:45 am]

BILLING CODE 4310–DQ–P

DEPARTMENT OF THE INTERIOR

Bureau of Land Management

[NV–030–04–5101–ER–F333]

Notice of Availability for the Tracy To Silver Lake Transmission Line Project Final Environmental Impact Statement and Initiation of a 30-day Public Comment Period, Carson City Field Office, NV

AGENCY: Bureau of Land Management, Interior.

ACTION: Notice of availability.

SUMMARY: Pursuant to section 102(2)(C) of the National Environmental Policy Act (NEPA) and 40 CFR 1500–1508 Council on Environmental Quality Regulations (CEQ), notice is hereby given that the Bureau of Land Management's (BLM) Carson City Field Office has prepared with the assistance of a third-party consultant, a Final Environmental Impact Statement (FEIS)

for the Proposed Tracy to Silver Lake Power Line Project, and has made the document available for public and agency review and comment. The project, which is proposed by the Sierra Pacific Power Company (SPPC), includes the upgrade and extension of a 120 KV electric transmission line, as well as the construction of two substations, from the existing power plant at Tracy, Nevada to the existing Silver Lake substation near Stead in Washoe County, Nevada. The FEIS also analyzes five alternatives to the proposed action that were developed with the cooperating agencies, SPPC, and the public.

DATES: The formal comment period for the FEIS will commence on July 16, 2004, and will end on August 16, 2004. Comments on issues and concerns should be received on or before the end of the comment period at the address listed below.

ADDRESSES: Written comments should be sent to BLM Carson City Field Office, Attn: Terri Knutson, 5665 Morgan Mill Road, Carson City, NV 89701; Fax (775) 885–6147; or e-mail address *tracysilverlake_eis@blm.gov.* A limited number of copies of the FEIS may be obtained at the above BLM Field Office in Carson City, NV. The FEIS also is available electronically via the Carson City Field Office Home Page at: *www.nv.blm.gov/carson.* Comments, including names and street addresses of respondents, will be available for public review at the above address during regular business hours (7:30 a.m.–5 p.m.), Monday through Friday, except holidays, and may be published as part of the EIS.

Individual respondents may request confidentiality. If you wish to withhold your name or street address from public review or from disclosure under the Freedom of Information Act, you must state this prominently at the beginning of your written comment. However, anonymous comments will not be considered. Such requests will be honored to the extent allowed by law. All submissions from organizations or businesses, and from individuals identifying themselves as representatives or officials of organizations or businesses, will be made available for public inspection in their entirety.

FOR FURTHER INFORMATION CONTACT: For additional information, write to the above address or call Terri Knutson (BLM Environmental Planner) at (775) 885–6156.

SUPPLEMENTARY INFORMATION: The FEIS analyzes the environmental impacts associated with the construction, operation, and maintenance of the proposed 120 kV power line and two substations. The FEIS analyzes the proposed power line route and five alternative routes, as well as, an alternative site for each of the two proposed substations. Issues analyzed were brought forth through the public scoping process, cooperating agency coordination, and input from BLM's resource specialists. The proposed power line crosses several jurisdictions with permitting responsibilities, therefore, the following agencies or entities are active participants in the EIS process as formal cooperating agencies: Reno-Sparks Indian Colony; Washoe County; City of Reno; City of Sparks; Airport Authority of Washoe County; and Truckee Meadows Regional Planning Agency. A copy of the FEIS has been sent to all individuals, agencies, and groups who have expressed an interest in the project, or as mandated by regulation or policy.

Public participation has occurred throughout the EIS process. A Notice of Intent to Prepare an EIS was published in the **Federal Register** on June 25, 2002 and the 30-day public comment period was initiated. A BLM public, open house was held in Reno on July 17, 2002 and six additional presentations were made to local agencies, homeowner associations, and the Reno-Sparks Indian Colony Tribal Council.

The Draft EIS was filed with the Environmental Protection Agency and a Notice of Availability of the document, announcement of public presentations, and initiation of a 60-day comment period was published in the **Federal Register** on October 10, 2003 (Pages 58668–58669). Two BLM public, open houses were held in Reno and sixteen additional presentations were conducted for local governments, planning commissions, citizen advisory boards, homeowner associations, and the Reno-Sparks Indian Colony Tribal Council. Certain adaptations or revisions were made to the FEIS in response to comments received on the Draft EIS. The comments and BLM responses to those comments are included in the FEIS.

To assist the BLM in identifying and considering issues and concerns on the proposed action and alternatives, comments on the FEIS should be as specific as possible. Comments should also refer to specific pages or chapters in the document. After the 30-day comment period ends, all comments will be analyzed and considered by the BLM in preparing the Record of Decision.

Dated: June 10, 2004.

Elayn Briggs,

Assistant Manager, Carson City Field Office.

[FR Doc. 04–15889 Filed 7–15–04; 8:45 am]

BILLING CODE 4310–HC–P

DEPARTMENT OF THE INTERIOR

Bureau of Land Management

[OR–110–6332–DC; HAG–03–0274]

Notice of Availability of the Rogue National Wild and Scenic River: Hellgate Recreation Area Management Plan and Record of Decision

AGENCY: Bureau of Land Management, Interior.

ACTION: Notice of availability.

SUMMARY: Notice is hereby given that the Bureau of Land Management (BLM), Medford District Office, Grants Pass Resource Area has prepared and approved the Rogue National Wild and Scenic River: Hellgate Recreation Area Management Plan and Record of Decision (RAMP/ROD) for the 27-mile stretch of the recreation section of the Rogue National Wild and Scenic River located in southern Josephine County, Oregon. The Rogue River was one of eight rivers identified as part of the National Wild and Scenic Rivers System when the Wild and Scenic Rivers Act was passed in 1968. The Wild and Scenic Rivers Act of 1968 established the wild and scenic rivers system (Pub. L. 90–542 and 99–590). The Wild and Scenic Rivers Act (WSRA) established a method for providing federal protection for certain remaining free-flowing rivers and preserving them and their immediate environments.

The Proposed Action (Alternative E), as analyzed in the FEIS, with minor decision changes resulting from public comments, are selected as the Record of Decision (ROD). It responds to issues raised during scoping and to public comments. It is a composite of various elements of the five alternatives (A to E) considered and analyzed in the Final EIS. The RAMP does the following: (1) Provides protection and enhancement of the outstandingly remarkable values while concurrently attaining the widest range of neutral and beneficial uses of the environment without degradation, (2) maintains an environment that supports diverse recreational opportunities, (3) integrates resource protection with an appropriate range of visitor uses, (4) contributes economically to the local communities, and (5) provides multi-resource standards and direction found in other legislation, policies, or management

plans that are designed to comply with applicable State and Federal laws.

The RAMP and ROD are signed by the District Manager and the Grants Pass Field Manager and will become effective upon publication of this notice. The RAMP and ROD have been prepared in accordance with section 202 of the National Environmental Policy Act of 1969 (NEPA), the Federal Land Policy and Management Act of 1976 (FLPMA), and BLM management policies. The RAMP and ROD conforms with the management direction contained in the 1995 Medford District Record of Decision and Resource Management Plan (RMP) and does not amend that plan.

DATES: Effective date of this decision is the date of this publication notice.

This decision may be appealed to the Interior Board of Land Appeals, Office of the Secretary, in accordance with the regulations contained in 43 CFR Part 4. Any parties adversely affected by this decision have the right to appeal within 30 days of publication of this notice.

ADDRESSES: Abbie Jossie, Grants Pass Field Manager, or Chris Dent, Rogue River Manager, Grants Pass Resource Area, Bureau of Land Management, Medford District Office, 3040 Biddle Road, Medford, Oregon 97504.

FOR FURTHER INFORMATION CONTACT: Copies of the RAMP and ROD are available at the Medford District Office or by contacting the Planning Team Leader, Cori Cooper, at (541) 618–2428 or *Cori_Cooper@or.blm.gov;* or it is located on the District's Web site at: *www.or.blm.gov/Medford.* Copies of the document are available for inspection at the BLM Oregon State Office Public Room during regular business hours (333 SW 1st Avenue, Portland, Oregon 97204, (503) 808–6001, 8:30 a.m.–4 p.m.).

SUPPLEMENTARY INFORMATION: The purpose of the RAMP and ROD is to: (1) Replace the 1978 Rogue National Wild and Scenic River Activity Plan for the Hellgate Recreation Section of the Rogue National Wild and Scenic River; (2) provide management direction and guidance on the management of the Hellgate section pursuant to the Wild and Scenic Rivers Act of 1968 (Pub. L. 90–542, October 2, 1968); and (3) maintain and manage a mix of water-based visitor use activities and users common to the river since its designation in 1968 as a National Wild and Scenic River, while protecting and enhancing the environment and the outstandingly remarkable values: Natural scenic quality, fisheries, and recreation opportunities.

Public participation has occurred throughout the planning process. A Notice of Intent was published in the **Federal Register** on October 1, 1993 and the Draft EIS Notice of Availability was published in the **Federal Register** on November 24, 2000. Public comments were solicited during scoping and through a 90-day comment period for the Draft EIS. The Final EIS Notice of Availability was published in the **Federal Register** on March 21, 2003 and was available to the public for 30 days.

Timothy B. Reuwsaat,

District Manager, BLM Medford District Office.

[FR Doc. 04–15604 Filed 7–15–04; 8:45 am]

BILLING CODE 4310–JB–P

DEPARTMENT OF INTERIOR

Bureau of Land Management

[WO–120–04–1630–PD]

Reopening of Comment Period for Proposed Supplementary Rules for the Public Lands Administered by the Bureau of Land Management in Nevada Relating to the Unlawful Use of Alcohol and Drugs

AGENCY: Bureau of Land Management, Interior.

ACTION: Proposed Supplementary Rules: reporting of comment period.

SUMMARY: The Bureau of Land Management (BLM) proposed supplementary rules for application to the public lands within the State of Nevada. The rules relate to the illegal use of alcohol and drugs on public lands. The BLM needs supplementary rules to protect natural resources and the health and safety of public land users. This notice reopens the comment period on these rules.

DATES: Send your comments to BLM by September 30, 2004.

ADDRESSES: Send your comments to Erika Schumacher, BLM, 1340 Financial Blvd., Reno, NV 89502. In developing final rules, the BLM may not consider comments postmarked or received in person after September 30, 2004.

FOR FURTHER INFORMATION CONTACT: Erika Schumacher, State Staff Ranger, Reno, Nevada at (775) 861–6621.

SUPPLEMENTARY INFORMATION: This notice extends the comment period on the Proposed Supplementary Rules for Public Lands Administered by the BLM in Nevada relating to the unlawful use of alcohol and drugs. The proposed rule was published in the **Federal Register** on Monday, May 3, 2004 (69 FR 24185). The State of Nevada asked BLM to extend the comment period to allow local law enforcement officials to gain a better understanding of the intent of the rule. The BLM will now accept comments on this proposed supplementary rule until September 30, 2004.

Robert V. Abbey,

State Director, Nevada.

[FR Doc. 04–16173 Filed 7–15–04; 8:45 am]

BILLING CODE 4310–84–M

DEPARTMENT OF THE INTERIOR

Minerals Management Service

Agency Information Collection Activities: Submitted for Office of Management and Budget (OMB) Review; Comment Request

AGENCY: Minerals Management Service (MMS), Interior.

ACTION: Notice of extension of an information collection (1010–0142).

SUMMARY: To comply with the Paperwork Reduction Act of 1995 (PRA), we are notifying the public that we have submitted to OMB an information collection request (ICR) to renew approval of the paperwork requirements in the regulations under 30 CFR 250, Subpart Q ''Decommissioning Activities.'' This notice also provides the public a second opportunity to comment on the paperwork burden of these regulatory requirements.

DATES: Submit written comments by August 16, 2004.

ADDRESSES: You may submit comments either by fax (202) 395–6566 or e-mail (*OIRA_DOCKET@omb.eop.gov*) directly to the Office of Information and Regulatory Affairs, OMB, Attention: Desk Officer for the Department of the Interior (1010–0142). Mail or hand carry a copy of your comments to the Department of the Interior; Minerals Management Service; Attention: Rules Processing Team; Mail Stop 4024; 381 Elden Street; Herndon, Virginia 20170–4817.

FOR FURTHER INFORMATION CONTACT: Arlene Bajusz, Rules Processing Team, (703) 787–1600. You may also contact Arlene Bajusz to obtain a copy, at no cost, of the regulations that require the subject collection of information.

SUPPLEMENTARY INFORMATION:

Title: 30 CFR Part 250, Subpart Q, Decommissioning Activities.

OMB Control Number: 1010–0142.

The Outer Continental Shelf (OCS) Lands Act, as amended (43 U.S.C. 1331 *et seq.* and 43 U.S.C. 1801 *et seq.*),

authorizes the Secretary of the Interior (Secretary) to prescribe rules and regulations to administer leasing of the OCS. Such rules and regulations will apply to all operations conducted under a lease. Operations on the OCS must preserve, protect, and develop oil and natural gas resources in a manner that is consistent with the need to make such resources available to meet the Nation's energy needs as rapidly as possible; to balance orderly energy resource development with protection of human, marine, and coastal environments; to ensure the public a fair and equitable return on the resources of the OCS; and to preserve and maintain free enterprise competition.

Section 1332(6) states that ''operations in the [O]uter Continental Shelf should be conducted in a safe manner by well trained personnel using technology, precautions, and other techniques sufficient to prevent or minimize the likelihood of blowouts, loss of well control, fires, spillages, physical obstructions to other users of the waters or subsoil and seabed, or other occurrences which may cause damage to the environment or to property or endanger life or health.''

The regulations at 30 CFR 250, Subpart Q, implement these requirements and concern decommissioning of platforms, wells, and pipelines, as well as site clearance and platform removal. The MMS uses the information collected under Subpart Q in the following ways:

- To determine the necessity for allowing a well to be temporarily abandoned, the lessee/operator must demonstrate that there is a reason for not permanently abandoning the well, and the temporary abandonment will not constitute a significant threat to fishing, navigation, or other uses of the seabed. MMS uses the information and documentation to verify that the lessee is diligently pursuing the final disposition of the well and that the lessee has performed the temporary plugging of the wellbore.
- The information submitted in initial decommissioning plans in the Alaska and Pacific OCS Regions will permit MMS to become involved in the ground-floor planning of the world-class platform removals anticipated to occur in these OCS regions.
- Site clearance and platform or pipeline removal information ensures that all objects (wellheads, platforms, etc.) installed on the OCS are properly removed using procedures that will protect marine life and the environment during removal operations and that the site is cleared so as not to conflict with or harm other uses of the OCS.
- Decommissioning a pipeline in place is needed to ensure that it will not constitute a hazard to navigation and commercial fishing operations, unduly interfere with other uses of the OCS, or have adverse environmental effects.
- The information is necessary to verify that decommissioning activities comply with approved applications and procedures and are satisfactorily completed.

Frequency: On occasion, annual, and as specified in sections.

Estimated Number and Description of Respondents: Approximately 236 Federal OCS oil, gas, and sulphur lessees and holders of pipeline rights-of-way.

Estimated Reporting and Recordkeeping ''Hour'' Burden: The estimated annual ''hour'' burden for this information collection is a total of 8,579 hours. The following chart details the individual components and estimated hour burdens. In calculating the burdens, we assumed that respondents perform certain requirements in the normal course of their activities. We consider these to be usual and customary and took that into account in estimating the burden.

Citation 30 CFR 250 Subpart Q	Reporting requirement	Hour burden	Average number annual responses	Annual burden hours
1703; 1704	Request approval for decommissioning	Burden included below		0
1704(g); 1712; 1716; 1717; 1721(a), (f), (g); 1722(a), (b), (d); 1723(b); 1743(a).	Submit form MMS–124 to plug wells; provide subsequent report; request alternate depth departure; request procedure to protect obstructions above seafloor; report results of trawling; certify area cleared of obstructions; remove casing stub or mud line suspension equipment and subsea protective covering; or other departures.	Burden included under 1010–0045		0
1713	Notify MMS 48 hours before beginning operations to permanently plug a well.	15 minutes	550 notices	138
1721(e); 1722(e), (h)(1); 1741(c).	Identify and report subsea wellheads, casing stubs, or other obstructions; mark wells protected by a dome; mark location to be cleared as navigation hazard.	U.S. Coast Guard requirements		.....
1722(c), (g)(2)	Notify MMS within days if trawl does not pass over protective device or causes damages to it; or if inspection reveals casing stub or mud line suspension is no longer protected.	15 minutes	10 notices	3
1721; 1722(f), (g)(3)	Submit annual report on plans for re-entry to complete or permanently abandon the well and inspection report.	2	75 reports	150
1722(h)	Request waiver of trawling test	2	5 requests	10
1704(a); 1726	Submit initial decommissioning application in the Pacific OCS Region and Alaska OCS Region.	20	2 applications	40
1704(b); 1725; 1727; 1728; 1730.	Submit final application to remove platform or other subsea facility structures (including alternate depth departure) or approval to maintain, to conduct other operations, or to convert to artificial reef.	10	150 applications	1,500
1725(e)	Notify MMS 48 hours before beginning removal of platform and other facilities.	15 minutes	150 notices	38
1704(c); 1729	Submit post platform or other facility removal report.	8	150 reports	1,200

Citation 30 CFR 250 Subpart Q	Reporting requirement	Hour burden	Average number annual responses	Annual burden hours
1740; 1743(b)	Request approval to use alternative methods of well site, platform, or other facility clearance.	8	75 requests	600
1743(b)	Verify permanently plugged well, platform, or other facility removal site cleared of obstructions and submit certification letter.	12	150 verifications	1,800
1704(d); 1751; 1752	Submit application to decommission pipeline in place or remove pipeline.	8	300 applications	2,400
1753	Submit post pipeline decommissioning report	2	300 reports	600
1700 thru 1754	General departure and alternative compliance requests not specifically covered elsewhere in subpart Q regulations.	2	50 requests	100
Total Hour Burden			1,967	8,579

Estimated Reporting and Recordkeeping ''Non-Hour Cost'' Burden: We have identified no paperwork ''non-hour cost'' burdens associated with the collection of information.

Public Disclosure Statement: The PRA (44 U.S.C. 3501, *et seq.*) provides that an agency may not conduct or sponsor a collection of information unless it displays a currently valid OMB control number. Until OMB approves a collection of information, you are not obligated to respond.

Comments: Section 3506(c)(2)(A) of the PRA (44 U.S.C. 3501, *et seq.*) requires each agency '' * * *to provide notice * * * and otherwise consult with members of the public and affected agencies concerning each proposed collection of information * * *'' Agencies must specifically solicit comments to: (a) Evaluate whether the proposed collection of information is necessary for the agency to perform its duties, including whether the information is useful; (b) evaluate the accuracy of the agency's estimate of the burden of the proposed collection of information; (c) enhance the quality, usefulness, and clarity of the information to be collected; and (d) minimize the burden on the respondents, including the use of automated collection techniques or other forms of information technology.

To comply with the public consultation process, on November 19, 2003, we published a **Federal Register** notice (68 FR 65307) announcing that we would submit this ICR to OMB for approval. The notice provided the required 60-day comment period. In addition, § 250.199 provides the OMB control number for the information collection requirements imposed by the 30 CFR 250 regulations and forms. The regulation also informs the public that they may comment at any time on the collections of information and provides the address to which they should send comments. We have received no comments in response to these efforts.

If you wish to comment in response to this notice, you may send your comments to the offices listed under the **ADDRESSES** section of this notice. OMB has up to 60 days to approve or disapprove the information collection but may respond after 30 days. Therefore, to ensure maximum consideration, OMB should receive public comments by August 16, 2004.

Public Comment Policy: MMS's practice is to make comments, including names and addresses of respondents, available for public review during regular business hours. If you wish your name and/or address to be withheld, you must state this prominently at the beginning of your comment. MMS will honor the request to the extent allowable by the law; however, anonymous comments will not be considered. All submissions from organizations or businesses, and from individuals identifying themselves as representatives or officials of organizations or businesses, will be made available for public inspection in their entirety.

MMS Federal Register Liaison Officer: Denise Johnson at (202) 208–3976.

Dated: March 16, 2004.

E.P. Danenberger,

Chief, Engineering and Operations Division.

[FR Doc. 04–16198 Filed 7–15–04; 8:45 am]

BILLING CODE 4310–MR–U

DEPARTMENT OF THE INTERIOR

National Park Service

Environmental Impact Statement for Hunting on the Cape Cod National Seashore

AGENCY: National Park Service, Interior.

ACTION: Information on public scoping.

The National Park Service (NPS) is preparing an Environmental Impact Statement (EIS) assessing hunting policy and potential alternatives and their effects on natural resources, user conflicts, socioeconomics, and social aspects of the Cape Cod National Seashore. There will be several public scoping meetings held during June and July 2004. The public scoping period will end July 30, 2004. Scoping meetings will be announced locally via news media and notices to local libraries. Written comments should be addressed to Superintendent, Cape Cod National Seashore, 99 Marconi Site Road, Wellfleet, MA 02667.

Dated: June 30, 2004.

Michael B. Murray,

Acting Superintendent.

[FR Doc. 04–16153 Filed 7–15–04; 8:45 am]

BILLING CODE 4312–52–P

DEPARTMENT OF THE INTERIOR

National Park Service

Subsistence Resource Commission; Meeting

AGENCY: National Park Service, Interior.

ACTION: Announcement of Subsistence Resource Commission meeting.

SUMMARY: Notice is hereby given in accordance with the Federal Advisory Committee Act that a meeting of the Aniakchak National Monument Park Subsistence Resource Commission will be held in Chignik Lake, Alaska. The purpose of the meeting will be to review Federal Subsistence Board wildlife proposals and continue work on National Park Service subsistence hunting program recommendations including other related subsistence management issues. The meeting will be open to the public. Any person may file with the Commission a written statement concerning the matters to be discussed.

The Subsistence Resource Commissions are authorized under Title

VIII, section 808, of the Alaska National Interest Lands Conservation Act, Public Law 96–487, and operation in accordance with the provisions of the Federal Advisory Committee Act.

DATES: The meeting will be on Wednesday, September 15, 2004, from 9 a.m. to 4 p.m. at the Subsistence Community Hall in Chignik Lake, Alaska.

FOR FURTHER INFORMATION CONTACT: Mary McBurney, Subsistence Manager, at (907) 644–3598 and Joe Fowler, Superintendent, at (907) 246–3305.

SUPPLEMENTARY INFORMATION: Notice of this meeting will be published in local newspapers and announced on local radio stations prior to the meeting dates. Locations and dates may need to be changed based on weather or local circumstances.

The following agenda items will be discussed:

1. Call to order (SRC Chair).
2. Roll Call and Confirmation of Quorum.
3. SRC Chair and Superintendent's Welcome and Introductions.
4. Review Commission Purpose.
5. Status of Membership and Membership Commendations.
6. Review and Adopt Agenda.
7. Review and adopt minutes from last meeting.
8. Park Subsistence Coordinator's Report:
a. Report on Unit 9(E) Caribou.
b. Report on Unit 9(E) Moose.
9. Update—Review Federal Subsistence Board Wildlife Proposals and Actions.
10. Update—Review Federal Subsistence Board Fisheries Proposals and Actions.
11. Superintendent's report on SRC Requests.
12. Status of Durational Residency Issue.
13. New Business.
14. SRC Work Session—prepare correspondence and develop recommendations.
15. Public and agency comments.
16. Set time and place of next SRC meeting.
17. Adjournment.

Draft minutes of the meeting will be available for public inspection approximately six weeks after the meeting from: Superintendent, Aniakchak National Monument and Preserve, P.O. Box 7, King Salmon, Alaska 99613.

Dated: June 23, 2004.

Ralph Tingey,

Acting Regional Director, Alaska.

[FR Doc. 04–16154 Filed 7–15–04; 8:45 am]

BILLING CODE 4312–HE–P

DEPARTMENT OF THE INTERIOR

National Park Service

Lake Clark National Park and Preserve Subsistence Resource Commission; Notice of Meeting

AGENCY: National Park Service, Interior.

ACTION: Announcement of Lake Clark National Park Subsistence Resource Commission meeting.

SUMMARY: Notice is hereby given in accordance with the Federal Advisory Committee Act that a meeting of the Lake Clark National Park Subsistence Resource Commission will be held at Pedro Bay, Alaska. The purpose of the meeting will be to review Federal Subsistence Board wildlife proposals and continue work on National Park Service subsistence hunting program recommendations including other related subsistence management issues. The meeting will be open to the public. Any person may file with the Commission a written statement concerning the matters to be discussed.

The Subsistence Resource Commission is authorized under Title VIII, Section 808, of the Alaska National Interest Lands Conservation Act, Public Law 96–487, and operates in accordance with the provisions of the Federal Advisory Committee Act.

DATES: The meeting will be held on Wednesday, September 22, 2004, from 10 a.m. to 4 p.m. at the Pedro Bay Village Council Office, Pedro Bay, Alaska.

FOR FURTHER INFORMATION CONTACT: Mary McBurney, Subsistence Manager at (907) 644–3598 and Joel Hard, Superintendent, at (907) 781–2218.

SUPPLEMENTARY INFORMATION: Notice of this meeting will be published in local newspapers and announced on local radio stations prior to the meeting dates. Locations and dates may need to be changed based on weather or local circumstances.

The following agenda items will be discussed:

1. Call to order (SRC Chair).
2. Roll Call and Confirmation of Quorum.
3. SRC Chair and Superintendent's Welcome and Introductions.
4. Review and Adopt Agenda.
5. Review Commission Purpose and Status of Membership.
6. Review and adopt minutes from last meeting.
7. Park Subsistence Coordinator's Report.
(a) Unit 9(B) Sheep Study.
(b) Unit 9(B) Moose Study.
(c) NPS Subsistence Eligibility.
(d) NPS Wood Cutting Permits.
8. Review Federal Subsistence Board—Wildlife Actions and Proposals.
9. Review Federal Subsistence Board—Fisheries Actions and Proposals.
10. Develop Subsistence Hunting Program Recommendations/Comments on Proposals.
11. Public and agency comments.
12. Set time and place of next SRC meeting.
13. Adjournment.

Draft minutes of the meeting will be available for public inspection approximately six weeks after the meeting from: Superintendent, Lake Clark National Park and Preserve, P.O. Box 4230, University Drive #311, Anchorage, AK 99508.

Dated: June 23, 2004.

Ralph Tingey,

Acting Regional Director, Alaska.

[FR Doc. 04–16156 Filed 7–15–04; 8:45 am]

BILLING CODE 4312–64–P

DEPARTMENT OF THE INTERIOR

National Park Service

Meeting Announcement

AGENCY: National Park Service, Interior.

ACTION: Announcement of Wrangell-St. Elias National Park Subsistence Resource Commission (SRC) meeting.

SUMMARY: Notice is hereby given in accordance with the Federal Advisory Committee Act that a meeting of the Wrangell-St. Elias National Park Subsistence Resource Commissions will be held at Copper Center, Alaska. The purpose of the meeting will be to continue work on currently authorized and proposed National Park Service subsistence hunting program recommendations including other related subsistence management issues. The meeting will be open to the public. Any person may file with the Commission a written statement concerning the matters to be discussed.

The Subsistence Resource Commission is authorized under Title VIII, Section 808, of the Alaska National Interest Lands Conservation Act, Public Law 96–487, and operates in accordance with the provisions of the Federal Advisory Committee Act.

DATES: The meeting dates are:

1. September 23, 2004, 9 a.m. to 5 p.m., Wrangell-St. Elias National Park and Preserve Theater (Mile 106.8 Richardson Highway), Copper Center, Alaska.

2. September 24, 2004, 9 a.m. to 5 p.m. (or until the completion of business), Wrangell-St. Elias National Park and Preserve Theater, Copper Center, Alaska.

FOR FURTHER INFORMATION CONTACT: Hunter Sharp, Acting Superintendent

and Barbara Cellarius, Subsistence Coordinator, at Wrangell-St. Elias National Park and Preserve, P.O. Box 439, Copper Center, AK 99573, telephone (907) 822–5234.

SUPPLEMENTARY INFORMATION: Notice of this meeting will be published in local newspapers and announced on local radio stations prior to the meeting dates. Locations and dates may need to be changed based on weather or local circumstances.

The agenda for the meeting is as follows:

(1) Call to order (SRC Chair).

(2) SRC roll call and confirmation of quorum.

(3) Introduction of Commission members, staff, and guests.

(4) Review and adoption of agenda.

(5) Review and approval of minutes from February 11–12, 2004 meeting.

(6) Superintendent's welcome and review commission purpose.

(7) Status of Commission membership.

(8) Superintendent's report.

(9) Wrangell-St. Elias NP&P staff report.

(10) Old business.

(11) New business.

(a) Review new proposals to change fisheries regulations.

(b) Develop proposals to change federal subsistence wildlife regulations for 2005–06.

(12) Public and agency comments.

(13) Work session (comment on issues, prepare letters).

(14) Set tentative time and place of next SRC meeting.

(15) Adjournment.

Draft minutes of the meeting will be available for public inspection approximately six weeks after the meeting from the Superintendent, Wrangell-St. Elias National Park and Preserve, at the above address.

Dated: June 18, 2004.

Victor Knox,

Acting Regional Director, Alaska Region.

[FR Doc. 04–16152 Filed 7–15–04; 8:45 am]

BILLING CODE 4312–HC–P

DEPARTMENT OF THE INTERIOR

National Park Service

Notice of Inventory Completion: American Museum of Natural History, New York, NY

AGENCY: National Park Service, Interior.

ACTION: Notice.

Notice is here given in accordance with the Native American Graves Protection and Repatriation Act (NAGPRA), 25 U.S.C. 3003, of the completion of an inventory of human remains and associated funerary objects in the possession of the American Museum of Natural History, New York, NY. The human remains and associated funerary objects were removed from Clallam County, WA.

This notice is published as part of the National Park Service's administrative responsibilities under NAGPRA, 25 U.S.C. 3003 (d)(3). The determinations in this notice are the sole responsibility of the museum, institution, or Federal agency that has control of the Native American human remains and associated funerary objects. The National Park Service is not responsible for the determinations in this notice.

A detailed assessment of the human remains was made by American Museum of Natural History professional staff in consultation with representatives of the Jamestown S'Klallam Tribe of Washington; Lower Elwha Tribal Community of the Lower Elwha Reservation, Washington; Lummi Tribe of the Lummi Reservation, Washington; Nooksack Indian Tribe of Washington; Port Gamble Indian Community of the Port Gamble Reservation, Washington; Samish Indian Tribe, Washington; Stillaguamish Tribe of Washington; Swinomish Indians of the Swinomish Reservation, Washington; Tulalip Tribes of the Tulalip Reservation, Washington; and Upper Skagit Indian Tribe of Washington.

In 1899, human remains representing a minimum of 64 individuals were removed from the surface of a sand spit in Dungeness, Clallam County, WA, by Harlan I. Smith during the Jesup North Pacific Expedition directed by Franz Boas of the American Museum of Natural History. No known individuals were identified. The 27 associated funerary objects are 1 dentalia shell bead, 2 shell pendants, 2 shell pieces, 1 harpoon barb, 20 pieces of animal bone, and 1 pestle.

Based on manner of interment, the presence of cranial shaping, and type of funerary objects present, the human remains have been identified as Native American. Geographic location is consistent with the postcontact territory of S'Klallam people. A postcontact S'Klallam village was located near Dungeness. Some of the graves were covered with boards fastened together with iron nails. The use of sand spits and wood boxes for burial is consistent with postcontact S'Klallam practice.

In 1899, human remains representing a minimum of 85 individuals were removed from the surface of a bluff in Dungeness, Clallam County, WA, by Harlan I. Smith during the Jesup North Pacific Expedition. No known individuals were identified. No associated funerary objects are present.

Based on manner of interment, the human remains have been identified as Native American. The individuals were collected from the surface, which might indicate a relatively recent age consistent with canoe or scaffold-type burials. Geographic location is consistent with the postcontact territory of the S'Klallam. A postcontact S'Klallam village was located near Dungeness. The use of canoe or box burials, which might result in such a surface assemblage, is consistent with postcontact S'Klallam practice.

In 1899, human remains representing a minimum of three individuals were removed from a shell heap in Dungeness, Clallam County, WA, by Harlan I. Smith during the Jesup North Pacific Expedition. No known individuals were identified. No associated funerary objects are present.

Based on manner of interment and the presence of cranial shaping, the human remains have been identified as Native American. The collector indicated that the human remains are likely to be of recent age. Geographic location is consistent with the postcontact territory of the S'Klallam. The use of sand spits for burial is consistent with postcontact S'Klallam practice. A postcontact S'Klallam village was located near Dungeness.

In 1899, human remains representing a minimum of 238 individuals were removed from the surface of a sand spit in Port Williams, Clallam County, WA, by Harlan I. Smith during the Jesup North Pacific Expedition. No known individuals were identified. The one associated funerary object is a pestle.

Based on manner of interment, presence of cranial shaping, and type of funerary object present, the human remains have been identified as Native American. Geographic location is consistent with the postcontact territory of the S'Klallam. A postcontact S'Klallam village was located near Port Williams. Most of the human remains were collected from the surface, which might indicate a relatively recent age consistent with canoe or scaffold-type burials. Museum documentation indicates that one burial contained glass beads, which were not collected.

Officials of the American Museum of Natural History have determined that, pursuant to 25 U.S.C. 3001 (9–10), the human remains described above represent the physical remains of a minimum of 390 individuals of Native American ancestry. Officials of the American Museum of Natural History

have also determined that, pursuant to 25 U.S.C. 3001 (3)(A), the 28 objects described above are reasonably believed to have been placed with or near individual human remains at the time of death or later as part of the death rite or ceremony. Lastly, officials of the American Museum of Natural History have determined that, pursuant to 25 U.S.C. 3001 (2), there is a relationship of shared group identity that can be reasonably traced between the Native American human remains and associated funerary objects and the Jamestown S'Klallam Tribe of Washington; Lower Elwha Tribal Community of the Lower Elwha Reservation, Washington; and Port Gamble Indian Community of the Port Gamble Reservation, Washington.

Representatives of any other Indian tribe that believes itself to be culturally affiliated with the human remains and associated funerary objects should contact Nell Murphy, Director of Cultural Resources, American Museum of Natural History, Central Park West at 79th Street, New York, NY 10024–5192, telephone (212) 769–5837 before August 16, 2004. Repatriation of the human remains and associated funerary objects to the Jamestown S'Klallam Tribe of Washington; Lower Elwha Tribal Community of the Lower Elwha Reservation, Washington; and Port Gamble Indian Community of the Port Gamble Reservation, Washington may proceed after that date if no additional claimants come forward.

The American Museum of Natural History is responsible for notifying the Jamestown S'Klallam Tribe of Washington; Lower Elwha Tribal Community of the Lower Elwha Reservation, Washington; Lummi Tribe of the Lummi Reservation, Washington; Nooksack Indian Tribe of Washington; Port Gamble Indian Community of the Port Gamble Reservation, Washington; Samish Indian Tribe, Washington; Stillaguamish Tribe of Washington; Swinomish Indians of the Swinomish Reservation, Washington; Tulalip Tribes of the Tulalip Reservation, Washington; and Upper Skagit Indian Tribe of Washington that this notice has been published.

Dated: May 28, 2004

John Robbins,

Assistant Director, Cultural Resources.

[FR Doc. 04–16151 Filed 7–15–04; 8:45 am]

BILLING CODE 4312–50–S

DEPARTMENT OF THE INTERIOR

National Park Service

Notice of Inventory Completion: Longyear Museum of Anthropology, Colgate University, Hamilton, NY

AGENCY: National Park Service, Interior.

ACTION: Notice.

Notice is here given in accordance with the Native American Graves Protection and Repatriation Act (NAGPRA), 25 U.S.C. 3003, of the completion of an inventory of human remains in the possession of the Longyear Museum of Anthropology, Colgate University, Hamilton, NY. The human remains were found in Poinsett County, AR.

This notice is published as part of the National Park Service's administrative responsibilities under NAGPRA, 25 U.S.C. 3003 (d)(3). The determinations in the notice are the sole responsibility of the museum, institution, or Federal agency that has control of the Native American human remains and associated funerary objects. The National Park Service is not responsible for the determinations in this notice.

A detailed assessment of the human remains was made by Longyear Museum of Anthropology professional staff in consultation with a representative of the Quapaw Tribe of Indians, Oklahoma.

At an unknown date between 1940 and 1979, human remains representing a minimum of one individual were donated to or purchased by the Longyear Museum of Anthropology. No records concerning the human remains are available, except for the following information written on the remains: ''Mound Builders Skull from Mound on Little River near Marked Tree, Ark'' and ''C-5.'' The source of this information is unknown. No known individual was identified. No associated funerary objects are present.

Marked Tree is located in Poinsett County in northeastern Arkansas. Removal from a mound site suggests that the human remains are Native American and date to a relatively late time period. Northeast Arkansas is part of the traditional territory of the Quapaw Tribe of Indians, Oklahoma. Based on the geographic location and the relatively late date attributed to the human remains, the human remains are most likely culturally affiliated with the Quapaw Tribe of Indians, Oklahoma.

Officials of the Longyear Museum of Anthropology have determined that, pursuant to 25 U.S.C. 3001 (9–10), the human remains described above represent the physical remains of one individual of Native American ancestry. Officials of the Longyear Museum of Anthropology also have determined that, pursuant to 25 U.S.C. 3001 (2), there is a relationship of shared group identity that can be reasonably traced between the Native American human remains and the Quapaw Tribe of Indians, Oklahoma.

Representatives of any other Indian tribe that believes itself to be culturally affiliated with the human remains should contact Dr. Jordan Kerber, Curator of Collections, Longyear Museum of Anthropology, Department of Sociology and Anthropology, Colgate University, Hamilton, NY 13346, telephone (315) 228–7559, before August 16, 2004. Repatriation of the human remains to the Quapaw Tribe of Indians, Oklahoma may proceed after that date if no additional claimants come forward.

The Longyear Museum of Anthropology is responsible for notifying the Quapaw Tribe of Indians, Oklahoma that this notice has been published.

Dated: June 1, 2004

John Robbins,

Assistant Director, Cultural Resources.

[FR Doc. 04–16148 Filed 7–15–04; 8:45 am]

BILLING CODE 4312–50–S

DEPARTMENT OF THE INTERIOR

National Park Service

Notice of Inventory Completion: Minneapolis Institute of Arts, Minneapolis, MN

AGENCY: National Park Service.

ACTION: Notice.

Notice is here given in accordance with the Native American Graves Protection and Repatriation Act (NAGPRA), 25 U.S.C. 3003, of the completion of an inventory of human remains and associated funerary objects in the possession of the Minneapolis Institute of Arts, Minneapolis, MN. The human remains and associated funerary object were removed from Rillito, Pima County, AZ.

This notice is published as part of the National Park Service's administrative responsibilities under NAGPRA, 25 U.S.C. 3003 (d)(3). The determinations in this notice are the sole responsibility of the museum, institution, or Federal agency that has control of the Native American human remains and associated funerary object. The National Park Service is not responsible for the determinations in this notice.

A detailed assessment of the human remains was made by Minneapolis Institute of Arts professional staff in consultation with representatives of the Ak Chin Indian Community of the Maricopa (Ak Chin) Indian Reservation, Arizona; Gila River Indian Community of the Gila River Indian Reservation, Arizona; Hopi Tribe of Arizona; Salt River Pima-Maricopa Indian Community of the Salt River Reservation, Arizona; and Tohono O'odham Nation of Arizona.

On an unknown date before 1942, cremated human remains representing a minimum of one individual and the vessel containing the human remains were removed from the ruins of a large Native American settlement in Rillito, Pima County, AZ, during excavations conducted by Ruth Vaughn of Tucson, AZ. According to museum documentation, Mrs. Vaughn presented the vessel containing the human remains to Ilma Dannels. In 1942, Mrs. Howard Martin gave the vessel and the human remains to the Walker Art Gallery in Minneapolis, MN. The Walker Art Gallery subsequently transferred ownership of the vessel and the human remains to the T.B. Walker Foundation, most likely in 1957, but kept physical custody of the vessel and the human remains until 1992, when the vessel and the human remains were donated to the Minneapolis Institute of Arts. No known individual was identified. The one associated funerary object is a small olla-shaped, red-on-buff colored ceramic vessel that contained the cremated human remains.

The archeological evidence, including attributes of ceramic style, domestic and ritual architecture, site organization, and settlement location, places the Rillito site within the archeologically defined Hohokam tradition. The style of the vessel and its use as a cremation urn are consistent with Hohokam cultural practices. The Hohokam resided in the area of the Rillito site from A.D. 300 to 1450 and are linked to the present-day Ak Chin Indian Community of the Maricopa (Ak Chin) Indian Reservation, Arizona; Gila River Indian Community of the Gila River Indian Reservation, Arizona; Hopi Tribe of Arizona; Salt River Pima-Maricopa Indian Community of the Salt River Reservation, Arizona; and Tohono O'odham Nation of Arizona by similarities in cultural practices and languages, continuity of occupation, and oral traditions.

Officials of the Minneapolis Institute of Arts have determined that, pursuant to 25 U.S.C. 3001 (9–10), the human remains described above represent the physical remains of one individual of Native American ancestry. Officials of the Minneapolis Institute of Arts also have determined that, pursuant to 25 U.S.C. 3001 (3)(A), the one object described above is reasonably believed to have been placed with or near individual human remains at the time of death or later as part of the death rite or ceremony. Lastly, officials of the Minneapolis Institute of Arts have determined that, pursuant to 25 U.S.C. 3001 (2), there is a relationship of shared group identity that can be reasonably traced between the Native American human remains and associated funerary object and the Ak Chin Indian Community of the Maricopa (Ak Chin) Indian Reservation, Arizona; Gila River Indian Community of the Gila River Indian Reservation, Arizona; Hopi Tribe of Arizona; Salt River Pima-Maricopa Indian Community of the Salt River Reservation, Arizona; and Tohono O'odham Nation of Arizona.

The Tohono O'odham Nation of Arizona submitted a claim to the Minneapolis Institute of Arts for the repatriation of the human remains and associated funerary object. Repatriation of the human remains and associated funerary object to the Tohono O'odham Nation of Arizona is supported by the Ak Chin Indian Community of the Maricopa (Ak Chin) Indian Reservation, Arizona; Gila River Indian Community of the Gila River Indian Reservation, Arizona; Hopi Tribe of Arizona; and Salt River Pima-Maricopa Indian Community of the Salt River Reservation.

Representatives of any other Indian tribe that believes itself to be culturally affiliated with the human remains and associated funerary object should contact Joseph Horse Capture, Associate Curator, Minneapolis Institute of Arts, 2400 Third Avenue South, Minneapolis, MN 55404, telephone (612) 870–3175, before August 16, 2004. Repatriation of the human remains and associated funerary object to the Tohono O'odham Nation of Arizona may proceed after that date if no additional claimants come forward.

The Minneapolis Institute of Arts is responsible for notifying the Ak Chin Indian Community of the Maricopa (Ak Chin) Indian Reservation, Arizona; Gila River Indian Community of the Gila River Indian Reservation, Arizona; Hopi Tribe of Arizona; Salt River Pima-Maricopa Indian Community of the Salt River Reservation, Arizona; and Tohono O'odham Nation of Arizona that this notice has been published.

Dated: June 7, 2004

John Robbins,

Assistant Director, Cultural Resources

[FR Doc. 04–16150 Filed 7–15–04; 8:45 am]

BILLING CODE 4312–50–S

DEPARTMENT OF THE INTERIOR

National Park Service

Notice of Intent to Repatriate a Cultural Item: New York State Museum, Albany, NY

AGENCY: National Park Service, Interior.

ACTION: Notice.

Notice is here given in accordance with the Native American Graves Protection and Repatriation Act (NAGPRA), 25 U.S.C. 3005, of the intent to repatriate a cultural item in the possession of the New York State Museum, Albany, NY, that meets the definition of ''cultural patrimony'' under 25 U.S.C. 3001.

This notice is published as part of the National Park Service's administrative responsibilities under NAGPRA, 25 U.S.C. 3003 (d)(3). The determinations in this notice are the sole responsibility of the museum, institution, or Federal agency that has control of these cultural items. The National Park Service is not responsible for the determinations in this notice.

The cultural item is a wampum belt known as the Akwesasne Wolf Wampum Belt. The belt is composed of 14 rows of white beads and purple beads. The purple beads depict two human figures with joined hands flanked by outward-facing wolf-like figures and, at the extreme ends of the belt, short horizontal stripes. The wampum belt is strung on leather warps with plant-fiber cordage wefts and is mounted on linen backing. The wampum belt measures 32.5 inches long and 4.4 inches wide. The New York State Museum acquired the wampum belt in the late 19th century from Harriet Maxwell Converse of New York City (catalog number E–37429). Museum records indicate that Mrs. Converse purchased the wampum belt ''from a St. Regis Indian'' on July 24, 1898.

At the time of collection, the wampum belt was reported to record a treaty dating to the mid-18th century between the French and Mohawks. In 1901, William M. Beauchamp wrote about the belt: ''The Mohawks treated with the French, but were never in their alliance, and the emblems on the belt are those of the middle of the 18th-century. At that time, the western Iroquois were balancing between the

English and French.'' According to expert analysis, the nonuniform size and shape of the beads also are indicative of a mid- to late 18th-century origin. The beads that comprise the belt are composed of older and newer wampum beads, and traces of red paint on some of the newer white beads are consistent with their reuse after inclusion in an earlier belt.

The wampum belt is culturally affiliated with the St. Regis Band of Mohawk Indians of New York, representing the Akwesasne Mohawk community composed of the St. Regis Band of Mohawk Indians of New York; Mohawk Nation Council of Chiefs, Akwesasne; and Mohawk Council of Akwesasne, Akwesasne. Cultural affiliation is clearly established in the records of the New York State Museum and in numerous published reports. The New York State Museum has determined that the historical significance of the wampum belt indicates that the belt qualifies as an object that has ongoing historical, traditional, or cultural importance central to the St. Regis Band of Mohawk Indians of New York. Consultation evidence provided by representatives of the St. Regis Band of Mohawk Indians of New York; Mohawk Council of Akwesasne, Akwesasne; and Mohawk Nation Council of Chiefs, Akwesasne also indicates that no individual had or has the right to alienate a community-owned wampum belt.

Officials of the New York State Museum have determined that, pursuant to 25 U.S.C. 3001 (3)(D), the cultural item has ongoing historical, traditional, or cultural importance central to the Native American group or culture itself, rather than property owned by an individual. Officials of the New York State Museum also have determined that, pursuant to 25 U.S.C. 3001 (2), there is a relationship of shared group identity that can be reasonably traced between the object of cultural patrimony and the St. Regis Band of Mohawk Indians of New York. Officials of the New York State Museum recognize that the Mohawk Nation Council of Chiefs, Akwesasne; and Mohawk Council of Akwesasne, Akwesasne also have a legitimate interest in the object of cultural patrimony.

Representatives of any other federally recognized Indian tribe that believes itself to be culturally affiliated with the object of cultural patrimony should contact Lisa Anderson, NAGPRA Coordinator, New York State Museum, 3122 Cultural Education Center, Albany, NY 12230, telephone (518) 486–2020, before August 16, 2004. Repatriation of the object of cultural patrimony to the St. Regis Band of Mohawk Indians of New York, representing the Akwesasne Mohawk community composed of the St. Regis Band of Mohawk Indians of New York; Mohawk Nation Council of Chiefs, Akwesasne; and Mohawk Council of Akwesasne, Akwesasne may proceed after that date if no additional claimants come forward.

The New York State Museum is responsible for notifying the St. Regis Band of Mohawk Indians of New York; Mohawk Nation Council of Chiefs, Akwesasne; and Mohawk Council of Akwesasne, Akwesasne that this notice has been published.

Dated: June 7, 2004.

John Robbins,

Assistant Director, Cultural Resources.

[FR Doc. 04–16147 Filed 7–15–04; 8:45 am]

BILLING CODE 4312–50–S

DEPARTMENT OF THE INTERIOR

National Park Service

Notice of Inventory Completion: Peabody Museum of Archaeology and Ethnology, Harvard University, Cambridge, MA

AGENCY: National Park Service, Interior.

ACTION: Notice.

Notice is here given in accordance with the Native American Graves Protection and Repatriation Act (NAGPRA), 25 U.S.C. 3003, of the completion of an inventory of human remains in the possession of the Peabody Museum of Archaeology and Ethnology, Harvard University, Cambridge, MA. The human remains were removed from New Mexico and an unknown locality in the southwestern United States.

This notice is published as part of the National Park Service's administrative responsibilities under NAGPRA, 25 U.S.C. 3003 (d)(3). The determinations within this notice are the sole responsibility of the museum, institution, or Federal agency that has control of the Native American human remains. The National Park Service is not responsible for the determinations within this notice.

A detailed assessment of the human remains was made by Peabody Museum of Archaeology and Ethnology professional staff in consultation with representatives of the Apache Tribe of Oklahoma; Fort McDowell Yavapai Nation, Arizona; Fort Sill Apache Tribe of Oklahoma; Hopi Tribe of Arizona; Jicarilla Apache Nation, New Mexico; Mescalero Apache Tribe of the Mescalero Reservation, New Mexico; Navajo Nation, Arizona, New Mexico & Utah; Pueblo of Acoma, New Mexico; Pueblo of Cochiti, New Mexico; Pueblo of Isleta, New Mexico; Pueblo of Jemez, New Mexico; Pueblo of Laguna, New Mexico; Pueblo of Nambe, New Mexico; Pueblo of Picuris, New Mexico; Pueblo of Pojoaque, New Mexico; Pueblo of San Felipe, New Mexico; Pueblo of San Ildefonso, New Mexico; Pueblo of San Juan, New Mexico; Pueblo of Sandia, New Mexico; Pueblo of Santa Ana, New Mexico; Pueblo of Santa Clara, New Mexico; Pueblo of Santo Domingo, New Mexico; Pueblo of Taos, New Mexico; Pueblo of Tesuque, New Mexico; Pueblo of Zia, New Mexico; San Carlos Apache Tribe of the San Carlos Reservation, Arizona; Tonto Apache Tribe of Arizona; White Mountain Apache Tribe of the Fort Apache Reservation, Arizona; Yavapai-Apache Nation of the Camp Verde Indian Reservation, Arizona; Ysleta del Sur Pueblo of Texas; and Zuni Tribe of the Zuni Reservation, New Mexico.

In 1880, human remains representing a minimum of one individual were collected by an unknown person from an unknown location in New Mexico. The human remains were donated to the Peabody Museum of Archaeology and Ethnology in 1896 by William C. Hunneman. No known individual was identified. No associated funerary objects are present.

Museum documentation describes the individual as ''Apache.'' The attribution of such a specific cultural affiliation suggests that the human remains date to the Historic period (post-A.D. 1540). The identifiable earlier group is the Apache people, and the present-day groups that represent the Apache people are the Apache Tribe of Oklahoma; Fort McDowell Yavapai Nation, Arizona; Fort Sill Apache Tribe of Oklahoma; Jicarilla Apache Nation, New Mexico; Mescalero Apache Tribe of the Mescalero Reservation, New Mexico; San Carlos Apache Tribe of the San Carlos Reservation, Arizona; Tonto Apache Tribe of Arizona; White Mountain Apache Tribe of the Fort Apache Reservation, Arizona; and Yavapai-Apache Nation of the Camp Verde Indian Reservation, Arizona.

In either 1884 or 1885, human remains representing a minimum of one individual were collected by Redington Fiske from an unknown locality in the southwestern United States. The human remains were donated to the Peabody Museum of Archaeology and Ethnology by Mr. Fiske through a Dr. Barbour in 1930. No known individual was identified. No associated funerary objects are present.

Museum documentation describes the individual as ''Apache'' and the place of acquisition as ''Southwest (Indian Territory).'' The attribution of such a specific cultural affiliation suggests that the human remains date to the Historic period (post-A.D. 1540). The identifiable earlier group is the Apache people and the present-day groups that represent the Apache people are the Apache Tribe of Oklahoma; Fort McDowell Yavapai Nation, Arizona; Fort Sill Apache Tribe of Oklahoma; Jicarilla Apache Nation, New Mexico; Mescalero Apache Tribe of the Mescalero Reservation, New Mexico; San Carlos Apache Tribe of the San Carlos Reservation, Arizona; Tonto Apache Tribe of Arizona; White Mountain Apache Tribe of the Fort Apache Reservation, Arizona; and Yavapai-Apache Nation of the Camp Verde Indian Reservation, Arizona.

Officials of the Peabody Museum of Archaeology and Ethnology have determined that, pursuant to 25 U.S.C. 3001 (9–10), the human remains described above represent the physical remains of a minimum of two individuals of Native American ancestry. Officials of the Peabody Museum of Archaeology and Ethnology also have determined that, pursuant to 25 U.S.C. 3001 (2), there is a relationship of shared group identity that can be reasonably traced between the Native American human remains and associated funerary objects and the Apache Tribe of Oklahoma; Fort McDowell Yavapai Nation, Arizona; Fort Sill Apache Tribe of Oklahoma; Jicarilla Apache Nation, New Mexico; Mescalero Apache Tribe of the Mescalero Reservation, New Mexico; San Carlos Apache Tribe of the San Carlos Reservation, Arizona; Tonto Apache Tribe of Arizona; White Mountain Apache Tribe of the Fort Apache Reservation, Arizona; and Yavapai-Apache Nation of the Camp Verde Indian Reservation, Arizona.

Representatives of any other Indian tribe that believes itself to be culturally affiliated with the human remains should contact Patricia Capone, Repatriation Coordinator, Peabody Museum of Archaeology and Ethnology, Harvard University, Cambridge, MA 02138, telephone (617) 496–3702, before August 16, 2004. Repatriation of the human remains to the Apache Tribe of Oklahoma; Fort McDowell Yavapai Nation, Arizona; Fort Sill Apache Tribe of Oklahoma; Jicarilla Apache Nation, New Mexico; Mescalero Apache Tribe of the Mescalero Reservation, New Mexico; San Carlos Apache Tribe of the San Carlos Reservation, Arizona; Tonto Apache Tribe of Arizona; White Mountain Apache Tribe of the Fort Apache Reservation, Arizona; and Yavapai-Apache Nation of the Camp Verde Indian Reservation, Arizona may proceed after that date if no additional claimants come forward.

The Peabody Museum of Archaeology and Ethnology is responsible for notifying the Apache Tribe of Oklahoma; Fort McDowell Yavapai Nation, Arizona; Fort Sill Apache Tribe of Oklahoma; Hopi Tribe of Arizona; Jicarilla Apache Nation, New Mexico; Mescalero Apache Tribe of the Mescalero Reservation, New Mexico; Navajo Nation, Arizona, New Mexico & Utah; Pueblo of Acoma, New Mexico; Pueblo of Cochiti, New Mexico; Pueblo of Isleta, New Mexico; Pueblo of Jemez, New Mexico; Pueblo of Laguna, New Mexico; Pueblo of Nambe, New Mexico; Pueblo of Picuris, New Mexico; Pueblo of Pojoaque, New Mexico; Pueblo of San Felipe, New Mexico; Pueblo of San Ildefonso, New Mexico; Pueblo of San Juan, New Mexico; Pueblo of Sandia, New Mexico; Pueblo of Santa Ana, New Mexico; Pueblo of Santa Clara, New Mexico; Pueblo of Santo Domingo, New Mexico; Pueblo of Taos, New Mexico; Pueblo of Tesuque, New Mexico; Pueblo of Zia, New Mexico; San Carlos Apache Tribe of the San Carlos Reservation, Arizona; Tonto Apache Tribe of Arizona; White Mountain Apache Tribe of the Fort Apache Reservation, Arizona; Yavapai-Apache Nation of the Camp Verde Indian Reservation, Arizona; Ysleta del Sur Pueblo of Texas; and Zuni Tribe of the Zuni Reservation, New Mexico that this notice has been published.

Dated: May 25, 2004

John Robbins,

Assistant Director, Cultural Resources.

[FR Doc. 04–16146 Filed 7–15–04; 8:45 am]

BILLING CODE 4312–50–S

DEPARTMENT OF THE INTERIOR

National Park Service

Notice of Inventory Completion: South Dakota State Archaeological Research Center, Rapid City, SD, and U.S. Department of Defense, Army Corps of Engineers, Omaha District, Omaha, NE

AGENCY: National Park Service, Interior.

ACTION: Notice.

Notice is here given in accordance with the Native American Graves Protection and Repatriation Act (NAGPRA), 25 U.S.C. 3003, of the completion of an inventory of human remains in the possession of the State Archaeological Research Center, Rapid City, SD, and in the control of the U.S. Department of Defense, Army Corps of Engineers, Omaha District, Omaha, NE. The human remains were removed from a site located along Lake Francis Case in South Dakota.

This notice is published as part of the National Park Service's administrative responsibilities under NAGPRA, 25 U.S.C. 3003 (d)(3). The determinations in this notice are the sole responsibility of the museum, institution, or Federal agency that has control of the Native American human remains and associated funerary objects. The National Park Service is not responsible for the determinations in this notice.

A detailed assessment of the human remains was made by the South Dakota State Archaeological Research Center and the U.S. Army Corps of Engineers, Omaha District, professional staff in consultation with representatives of the Cheyenne-Arapaho Tribes of Oklahoma and the Northern Cheyenne Tribe of the Northern Cheyenne Indian Reservation, Montana.

In 1993, a human cranium, representing one individual, was confiscated from a Platte, SD, bait shop by a State trooper. The shop owner stated that the human remains were recovered while he was fishing along the Missouri River, probably in Gregory County, SD. The river in Gregory County forms part of Lake Francis Case. The human remains were turned over to the South Dakota State Archaeological Research Center. In 1995, the remains were submitted to the University of Tennessee, Knoxville for examination by physical anthropologists. The age of the human remains was not determined. No known individuals were identified. No associated funerary objects are present.

Based on the probable location from which the human remains were removed and the physical examination of the human remains, this individual has been identified as Native American. Geographic, archeological, and physical anthropological data and Cheyenne oral tradition indicate that the human remains are likely affiliated with the Northern Cheyenne Tribe of the Northern Cheyenne Indian Reservation, Montana.

Officials of the U.S. Army Corps of Engineers, Omaha District, have determined that, pursuant to 25 U.S.C. 3001 (9–10), the human remains listed above represent the physical remains of one individual of Native American ancestry. Officials of the U.S. Army Corps of Engineers, Omaha District, also have determined that, pursuant to 25 U.S.C. 3001 (2), there is a relationship of shared group identity that can be reasonably traced between the Native

American human remains and the Northern Cheyenne Tribe of the Northern Cheyenne Indian Reservation, Montana.

Representatives of any other Indian tribe that believes itself to be culturally affiliated with the human remains should contact Sandra Barnum, U.S. Army Corps of Engineers, Omaha District, 106 South 15th Street, Omaha, NE 68102, telephone (402) 221–4895, before August 16, 2004. Repatriation of the human remains to the Northern Cheyenne Tribe of the Northern Cheyenne Indian Reservation, Montana may proceed after that date if no additional claimants come forward.

The U.S. Army Corps of Engineers, Omaha District, is responsible for notifying the Northern Cheyenne of the Northern Cheyenne Indian Reservation, Montana and the Cheyenne-Arapaho Tribes of Oklahoma that this notice has been published.

Dated: May 28, 2004

John Robbins,

Assistant Director, Cultural Resources.

[FR Doc. 04–16149 Filed 7–15–04; 8:45 am]

BILLING CODE 4312–50–S

DEPARTMENT OF INTERIOR

Office of Surface Mining Reclamation and Enforcement

Notice of Proposed Information Collection for 1029–0030 and 1029–0049

AGENCY: Office of Surface Mining Reclamation and Enforcement.

ACTION: Notice and request for comments.

SUMMARY: In compliance with the Paperwork Reduction Act of 1995, the Office of Surface Mining Reclamation and Enforcement (OSM) is announcing that the information collection requests for the titles described below have been forwarded to the Office of Management and Budget (OMB) for review and comment. The information collection requests describe the nature of the information collections and the expected burden and cost for 30 CFR parts 764 and 822.

DATES: OMB has up to 60 days to approve or disapprove the information collections but may respond after 30 days. Therefore, public comments should be submitted to OMB by August 16, 2004, in order to be assured of consideration.

FOR FURTHER INFORMATION CONTACT: To request a copy of either information collection request, explanatory information and related forms, contact John A. Trelease at (202) 208–2783, or electronically to *jtreleas@osmre.gov*.

SUPPLEMENTARY INFORMATION: The Office of Management and Budget (OMB) regulations at 5 CFR 1320, which implement provisions of the Paperwork Reduction Act of 1995 (Pub. L. 104–13), require that interested members of the public and affected agencies have an opportunity to comment on information collection and recordkeeping activities (*see* 5 CFR 1320.8(d)). OSM has submitted two requests to OMB to renew its approval of the collections of information contained in: State processes for designating areas unsuitable for surface coal mining operations, 30 CFR part 764; and Special permanent program performance standards—operations in alluvial valley floors, 30 CFR part 822. OSM is requesting a 3-year term of approval for each information collection activity.

An agency may not conduct or sponsor, and a person is not required to respond to, a collection of information unless it displays a currently valid OMB control number. The OMB control numbers for these collections of information are 1029–0030 for part 764, and 1029–0049 for part 822.

As required under 5 CFR 1320.8(d), **Federal Register** notices soliciting comments on these collections of information was published on February 17, 2004 (69 FR 7496). No comments were received. This notice provides the public with an additional 30 days in which to comment on the following information collection activities:

Title: State processes for designating areas unsuitable for surface coal mining operations, 30 CFR part 764.

OMB Control Number: 1029–0030.

Summary: This part implements the requirement of section 522 of the Surface Mining Control and Reclamation Act of 1977 (SMCRA), Pub. L. 95–87, which provides authority for citizens to petition States to designate lands unsuitable for surface coal mining operations, or to terminate such designation. The regulatory authority uses the information to identify, locate, compare and evaluate the area requested to be designated as unsuitable, or terminate the designation, for surface coal mining operations.

Bureau Form Number: None.

Frequency of Collection: Once.

Description of Respondents: The 3 individuals, groups or businesses who petition the States, and the State regulatory authorities that must process the petitions.

Total Annual Responses: 3.

Total Annual Burden Hours: 4,680.

Title: Special permanent program performance standards—operations in alluvial valley floors, 30 CFR part 822.

OMB Control Number: 1029–0049.

Summary: Sections 510(b)(5) and 515(b)(10)(F) of the Surface Coal Mining and Reclamation Act of 1977 (the Act) protect alluvial valley floors from the adverse effects of surface coal mining operations west of the 100th meridian. Part 822 requires the permitee to install, maintain, and operate a monitoring system in order to provide specific protection for alluvial valley floors. This information is necessary to determine whether the unique hydrologic conditions of alluvial valley floors are protected according to the Act.

Bureau Form Number: None.

Frequency of Collection: Annually.

Description of Respondents: Surface coal mining operators who operate on alluvial valley floors and the State regulatory authorities.

Total Annual Responses: 27.

Total Annual Burden Hours: 2,970.

Send comments on the need for the collections of information for the performance of the functions of the agency; the accuracy of the agency's burden estimates; ways to enhance the quality, utility and clarity of the information collections; and ways to minimize the information collection burdens on respondents, such as use of automated means of collections of the information, to the following addresses. Please refer to the appropriate OMB OMB control numbers in all correspondence.

ADDRESSES: Submit comments to the Office of Information and Regulatory Affairs, Office of Management and Budget, Attention: Department of Interior Desk Officer, by telefax at (202) 395–6566 or via e-mail to *Oira_Docket@omb.eop.gov.* Also, please send a copy of your comments to John A. Trelease, Office of Surface Mining Reclamation and Enforcement, 1951 Constitution Ave., NW., Room 210–SIB, Washington, DC 20240, or electronically to *jtreleas@osmre.gov.*

Dated: April 26, 2004.

Sarah E. Donnelly,

Acting Chief, Division of Regulatory Support.

[FR Doc. 04–16190 Filed 7–15–04; 8:45 am]

BILLING CODE 4310–05–M

DEPARTMENT OF LABOR

Employment and Training Administration

Proposed Information Collection Request Submitted for Public Comment and Recommendations; ETA Management Information and Longitudinal Evaluation (EMILE) Reporting System

ACTION: Notice.

SUMMARY: The Department of Labor, as part of its continuing effort to reduce paperwork and respondent burden, conducts a pre-clearance consultation program to provide the general public and Federal agencies with an opportunity to comment on proposed and/or continuing collections of information in accordance with the Paperwork Reduction Act of 1995 (PRA95) [44 U.S.C. 3506(c)(2)(A)]. This program helps to ensure that requested data can be provided in the desired format, the reporting burden (time and financial resources) is minimized, the collection instruments are clearly understood, and the impact of collection requirements on respondents can be properly assessed. The Employment and Training Administration (ETA) is soliciting comments on the establishment of a single, streamlined reporting and recordkeeping system, formally called the ETA Management Information and Longitudinal Evaluation (EMILE) reporting system, to replace the current data collection and reporting requirements for the following 12 employment and training programs: Employment Service (ES) program, including reports for the Veterans Employment and Training Service (VETS) program, Workforce Investment Act (WIA) Title I-B Adult program, Dislocated Worker program, and Youth program, National Emergency Grant (NEG) program, Trade Adjustment Assistance program, National Farm Worker Jobs Program (NFJP), Indian and Native American program, Senior Community Service Employment Program (SCSEP), H–1B Technical Skills Training grant (H–1B) program, and the Responsible Reintegration of Youth Offenders program.

DATES: Submit comments on or before September 14, 2004.

ADDRESSEE: Send comments to: Ms. Esther Johnson, Performance and Results Office, Employment and Training Administration, U.S. Department of Labor, 200 Constitution Avenue NW., Room S–5206, Washington, DC 20210; telephone: (202) 693–3420 (this is not a toll-free number); fax: (202) 693–3490; e-mail: *ETAperforms@dol.gov.*

FOR FURTHER INFORMATION CONTACT: Ms. Karen Staha, Performance and Results Office, Employment and Training Administration, U.S. Department of Labor, 200 Constitution Avenue NW., Room S–5206, Washington, DC 20210; telephone: (202) 693–3420 (this is not a toll-free number); fax: (202) 693–3490; e-mail: *ETAperforms@dol.gov.*

SUPPLEMENTARY INFORMATION:

I. Background

This is a request by ETA to replace current quarterly reporting requirements for 12 ETA programs with a single, streamlined system of reporting performance results. In 2002, under the President's Management Agenda, the Office of Management and Budget (OMB) and other Federal agencies developed common performance measures to be applied to certain Federally-funded programs with similar strategic goals. As part of this initiative, ETA issued Training and Employment Guidance Letter (TEGL) 15–03, Common Measures Policy. This policy guidance, however, becomes effective only when it is implemented through changes to the program reporting systems. The proposed EMILE reporting system streamlines 12 ETA program reporting systems into one comprehensive reporting structure that will allow for consistent, comparable analysis across ETA funded employment and training programs, using the definitions for common measures established in TEGL 15–03.

States and other grantees are currently required to submit separate performance reports for each of the programs they administer. There are no standard forms, definitions, instructions, or submission procedures. In some instances, there is confusion regarding the time periods used for calculating program performance, what data are to be reported, and how the data are prepared for submission to the Department on a timely basis. The lack of standardized data collection and report preparation procedures imposes a burden on grantees that seek to coordinate service delivery and performance measurement in a local One-Stop environment. Equally important, these reporting inconsistencies frustrate many of the Department's stakeholders and the general public at large who want to understand how to interpret ETA program performance results and access the most up-to-date performance information to effectively inform program planning and accountability and resource allocation decisions.

The need for a comprehensive and standardized reporting system was also underscored in reviews conducted by external oversight agencies, including the Department's Office of Inspector General and the General Accounting Office. These oversight agencies have questioned the validity and comparability of data reported by ETA to Congress. To address these issues, ETA is using its statutory and regulatory authority to redesign and strengthen its various program performance reporting systems into a single comprehensive system, formally called the ETA Management Information and Longitudinal Evaluation (EMILE) reporting system, to replace the current quarterly reporting requirements of 12 employment and training programs. This comprehensive reporting structure features a single quarterly report format and establishes a common language that will standardize data collection for program participants and employer customers, based on a core set of information for all program customers. These standardized individual records will include information on demographic characteristics, type of services received, and common measures of outcomes defined consistently across all programs. In some cases, additional data collection requirements are necessary for federal oversight or to comply with existing statutory requirements, and these are also included in the proposed EMILE reporting system.

The EMILE reporting system consists of three components:

(1) A Workforce Investment Quarterly Summary Report that provides aggregate performance information on program participants, participants who exit the program, and performance outcomes for the most recent four-quarter period. This rolling four-quarter data collection methodology provides ETA and the grantees with greater flexibility in discussing annual performance results according to any four-quarter reporting period (*e.g.*, Calendar Year, Program Year, and Federal Fiscal Year). The quarterly report format has been designed in such a way that grantees who administer multiple ETA grants can utilize a single report format to certify program accomplishments on a quarterly basis. This uniform report format will not only help facilitate consistent performance calculations and reporting by grantees, but provide management information to the Administration, Congress and other stakeholders that focus on the core functions of the workforce system:

employment for adults and *skills* for youth.

(2) An Employer Individual Record that provides a list of standardized data elements, definitions, and specifications that are considered important to the management of the programs and the provision of services to employer customers. The use of an employer individual record reflects the current focus on becoming more demand-driven as an effective way to provide good career opportunities for job seekers and improve economic conditions. Information contained on the employer individual record will provide a more complete picture of the total impact of the One-Stop system by including the characteristics of employers served and the type and frequency of services being delivered; and

(3) A Job Seeker Individual Record that provides a list of standardized data elements, definitions, and specifications that can be used to describe the characteristics, services and activities, and outcomes of job seekers across ETA programs. This individual record incorporates data needed to calculate common measures defined in TEGL 15–03 as well as other statutorily required indicators of performance, and establishes a common language that will standardize data collection for program participants, based on a core set of information for all job seeker customers. The job seeker individual record has been designed in such a way that grantees who administer multiple ETA grants can utilize this single record layout to report additional characteristics, services and activities, and outcomes for the same program customer. Information contained on the job seeker individual record will facilitate meaningful evaluation, realistic planning, and effective management of ETA funded programs.

The EMILE Handbook provides detailed reporting specifications and instructions on each of the three reporting system components. It is available at *http://www.doleta.gov/performance* or by requesting an electronic copy through e-mail at *ETAperforms@dol.gov* or by contacting the office listed in the **FOR FURTHER INFORMATION CONTACT** section of this notice.

The EMILE reporting system will ensure there is consistency across all ETA programs so all programs are evaluated using the same criteria. When job seeker and employer data are collected, maintained and reported consistently and accurately at a basic level (*e.g.*, grantee field office or One-Stop Career Center), data can be aggregated from each program and reported to higher levels with greater confidence that the data are comparable from customer to customer, from program to program, and from year to year. EMILE also incorporates provisions to ensure the integrity of reported data, and resolve data collection and reliability issues raised by OIG and GAO regarding the Department's ability to accurately evaluate program performance. The quarterly report and standardized individual records contained within the proposed EMILE reporting system will replace the following 21 ETA reports: ETA 9090 WIA Quarterly Report; WIA Customer Satisfaction Survey; WIA Standardized Record Data; ES 9002 A, B, C, D, and E Quarterly Reports; ES Customer Satisfaction Survey; VETS 200 A, B, and C Quarterly Reports; ETA 563 Quarterly Determinations, Allowance Activities, and Reemployment Services Under the Trade Act Report; Trade Act Participant Report; ETA 9095—Section 167 NFJP Status Report; ETA 9098—Section 167 NFJP Youth Status Report; WIA Standardized Program Report; ETA 5140 Quarterly Progress Report; SCSEP Customer Service Survey; ETA 9084 Comprehensive Services Program Report; and ETA 9085 Supplemental Youth Program Report. The EMILE reporting system will also establish quarterly reporting requirements for the H–1B, NEG, and Responsible Reintegration of Youth Offenders grant program.

While the proposed standardized individual records and quarterly report represent a comprehensive data collection and reporting approach, it is important to note that every effort has been made to establish common data definitions and formats with minimum burden to grantees. At its foundation, the proposed reporting structure organizes information that is maintained by states and grantees in order to run their day-to-day operations. The proposal streamlines and makes consistent information that ETA currently collects from states and grantees. The proposal describes a minimum level of information collection that is necessary to comply with Equal Opportunity requirements, hold states and grantees appropriately accountable for the Federal funds they receive, including common measures, and allow the Department to fulfill its oversight and management responsibilities.

Administration of Federal grant programs does result in a data collection and reporting burden on states and grantees. ETA has developed strategies to minimize this burden on grantees, especially smaller grantees who may have limited access to technology. First, the Department will work closely with the grantees to establish a transition plan for each program, to phase out prior reporting requirements to be replaced by EMILE once these new reporting requirements have been approved by OMB. A key component of this transition plan will include use of the Department's existing resources to provide staff training and technical assistance on the new report specifications. Second, the Department will enhance its current electronic reporting system and technology infrastructure to accommodate the new report specifications. Third, because grantees are required to utilize wage records in order to calculate OMB common measures, the Department will continue its financial commitment for the national Wage Record Interchange System (WRIS) as well as other mechanisms that will support grantee access to wage records maintained by Federal agencies. And finally, to reduce startup costs related to implementing EMILE, the Department is planning to update standardized reporting and validation software and instructional handbooks, which may be used by grantees in calculating and electronically submitting the quarterly summary performance report and individual records.

II. Desired Focus of Comments

Currently, ETA is soliciting comments concerning the proposed new collection of information under the EMILE reporting system. A copy of the proposed information collection request can be obtained by contacting the office listed above in the **ADDRESSES** section of this notice. The Department is particularly interested in comments that address the following areas about the EMILE reporting and recordkeeping specifications:

- Evaluate whether the proposed collection of information is necessary for the proper performance of the functions of the agency, including whether the information will have practical utility;
- Evaluate the accuracy of the agency's estimate of the burden of the proposed collection of information, including the validity of the methodology and assumptions used;
- Discuss how to enhance the quality, utility, and clarity of the information to be collected; and
- Suggest how to minimize the burden of the collection of information on those who are to respond, including through the use of appropriate automated, electronic, mechanical, or other technological collection

techniques or other forms of information technology (*e.g.*, permitting electronic submissions of responses).

With regard to the Agency's estimate of the burden of the proposed collection of information, ETA is particularly interested in receiving public comments on the efficacy of collecting a statistically valid sample of individual records for each program instead of all individual records. The Agency would also like to receive public comments regarding the collection of additional information on the types of disability of people being served in the One-Stop. More specifically, if a person indicates that he/she has a disability, that person would also be given the opportunity to voluntarily disclose whether he/she has any one or more of the following types of disability that substantially limits one or more major life activities: Specific learning disability, hearing impairment, visual impairment, speech impairment, cognitive impairment, orthopedic impairment, mental/emotional/psychological impairment, drug addiction or alcoholism, or other types of disability. ETA believes that collection of types of disability will have practical utility for focusing on, and evaluating the effectiveness of its programs in serving persons with a disability through the One-Stop system.

In summary, ETA's proposed reporting system, EMILE, is intended to: (1) Eliminate 12 disparate ETA program reporting requirements and replace them with a single performance reporting system that will enable consistent measurement and understanding of the overall effectiveness of ETA programs in helping job seekers find meaningful employment and in helping employers find workers, (2) implement standardized data collection and report submission procedures that will allow for consistent, comparable analysis across ETA funded employment and training programs, using the definitions for common measures established in TEGL 15–03, (3) collect management information in order to more fully understand how the populations served and services provided through each program impact performance outcomes, (4) collect participant information quarterly so the workforce system can respond more quickly and effectively to the oversight and management needs of Congress, the Administration and the general public, (5) ensure that performance information is accurate and reliable, and (6) support the establishment of a demand-driven system by organizing information on services used by employer customers.

III. Current Actions

Type of Review: New.

Agency: Department of Labor, Employment and Training Administration.

Title: ETA Management Information and Longitudinal Evaluation (EMILE) Reporting System.

OMB Number: 1295–ONEW.

Recordkeeping: Three years for States and grantees.

Affected Public: Individuals or households, business or other for-profit, not-for-profit institutions, Federal, State, local or tribal government.

Cite/Reference/Form/etc: Workforce Investment Act of 1998, Wagner-Peyser Act, Trade Adjustment Assistance Act, Older Americans Act, Jobs for Veterans Act, American Competitiveness in the Twenty-First Century Act of 2000, see table below for list of forms.

Total Respondents: 590 States and grantees.

Frequency: Quarterly.

Total Responses: 4,928 submissions annually—each State and grantee submits job seeker individual records and a quarterly summary report each quarter for each program. Each State also submits employer individual records each quarter.

Average Time per Response: Varies by program and by submission (individual record or quarterly summary report).

Estimated Total Burden Hours:

Form/activity	Total respondents	Frequency	Total annual responses	Total annual hours	Average annual hours/response
Job Seeker Individual Record	590 states, territories, and grantees.	Quarterly	2,360	831,835	353
Employer Record	52 states, and territories	Quarterly	208	832	4
Quarterly Summary Report	590 states, territories, and grantees.	Quarterly	2,360 [1]	11,800	5
Customer Satisfaction	303 states, territories, and grantees.	Quarterly	Included in Quarterly Summary Report.	44,596	19
Totals	590 (unduplicated count of all respondents).	Quarterly	4,928	889,063	180

[1] Customer satisfaction results are reported in the Quarterly Summary Report.

Total Burden Cost (capital/startup): $4,576,260.

Total Burden Cost (operating/maintaining): $26,019,500.

Comments submitted in response to this notice will be summarized and/or included in the request for OMB approval of the information collection request; they will also become a matter of public record.

Signed in Washington, DC, on July 13, 2004.

Emily Stover DeRocco,

Assistant Secretary for Employment and Training.

[FR Doc. 04–16175 Filed 7–15–04; 8:45 am]

BILLING CODE 4510–30–P

DEPARTMENT OF LABOR

Employment Standards Administration, Wage and Hour Division

Minimum Wages for Federal and Federally Assisted Construction; General Wage Determination Decisions

General wage determination decisions of the Secretary of Labor are issued in accordance with applicable law and are based on the information obtained by the Department of Labor from its study of local wage conditions and data made

available from other sources. They specify the basic hourly wage rates and fringe benefits which are determined to be prevailing for the described classes of laborers and mechanics employed on construction projects of a similar character and in the localities specified therein.

The determinations in these decisions of prevailing rates and fringe benefits have been made in accordance with 29 CFR part 1, by authority of the Secretary of Labor pursuant to the provisions of the Davis-Bacon Act of March 3, 1931, as amended (46 Stat. 1494, as amended, 40 U.S.C. 276a) and of other Federal statutes referred to in 29 CFR part 1, appendix, as well as such additional statutes as may from time to time be enacted containing provisions for the payment of wages determined to be prevailing by the Secretary of Labor in accordance with the Davis-Bacon Act. The prevailing rates and fringe benefits determined in these decisions shall, in accordance with the provisions of the foregoing statutes, constitute the minimum wages payable on Federal and federally assisted construction projects to laborers and mechanics of the specified classes engaged on contract work of the character and in the localities described therein.

Good cause is hereby found for not utilizing notice and public comment procedure thereon prior to the issuance of these determinations as prescribed in 5 U.S.C. 553 and not providing for delay in the effective date as prescribed in that section, because the necessity to issue current construction industry wage determinations frequently and in large volume causes procedures to be impractical and contrary to the public interest.

General wage determination decisions, and modifications and supersedeas decisions thereto, contain no expiration dates and are effective from their date of notice in the **Federal Register**, or on the date written notice is received by the agency, whichever is earlier. These decisions are to be used in accordance with the provisions of 29 CFR parts 1 and 5. Accordingly, the applicable decision, together with any modifications issued, must be made a part of every contract for performance of the described work within the geographic area indicated as required by an applicable Federal prevailing wage law and 29 CFR part 5. The wage rates and fringe benefits, notice of which is published herein, and which are contained in the Government Printing Office (GPO) document entitled ''General Wage Determinations Issued Under the Davis-Bacon and Related Acts,'' shall be the minimum paid by contractors and subcontractors to laborers and mechanics.

Any person, organization, or governmental agency having an interest in the rates determined as prevailing is encouraged to submit wage rate and fringe benefit information for consideration by the Department.

Further information and self-explanatory forms for the purpose of submitting this data may be obtained by writing to the U.S. Department of Labor, Employment Standards Administration, Wage and Hour Division, Division of Wage Determinations, 200 Constitution Avenue, NW., Room S–3014, Washington, DC 20210.

Modification to General Wage Determination Decisions

The number of the decisions listed to the Government Printing Office document entitled ''General Wage Determinations Issued Under the Davis-Bacon and Related Acts'' being modified are listed by Volume and State. Dates of publication in the **Federal Register** are in parentheses following the decisions being modified.

Volume I

New York
- NY030002 (Jun. 13, 2003)
- NY030003 (Jun. 13, 2003)
- NY030004 (Jun. 13, 2003)
- NY030005 (Jun. 13, 2003)
- NY030006 (Jun. 13, 2003)
- NY030007 (Jun. 13, 2003)
- NY030008 (Jun. 13, 2003)
- NY030010 (Jun. 13, 2003)
- NY030012 (Jun. 13, 2003)
- NY030013 (Jun. 13, 2003)
- NY030015 (Jun. 13, 2003)
- NY030016 (Jun. 13, 2003)
- NY030017 (Jun. 13, 2003)
- NY030018 (Jun. 13, 2003)
- NY030020 (Jun. 13, 2003)
- NY030021 (Jun. 13, 2003)
- NY030022 (Jun. 13, 2003)
- NY030023 (Jun. 13, 2003)
- NY030025 (Jun. 13, 2003)
- NY030026 (Jun. 13, 2003)
- NY030031 (Jun. 13, 2003)
- NY030033 (Jun. 13, 2003)
- NY030034 (Jun. 13, 2003)
- NY030037 (Jun. 13, 2003)
- NY030038 (Jun. 13, 2003)
- NY030039 (Jun. 13, 2003)
- NY030040 (Jun. 13, 2003)
- NY030041 (Jun. 13, 2003)
- NY030042 (Jun. 13, 2003)
- NY030043 (Jun. 13, 2003)
- NY030044 (Jun. 13, 2003)
- NY030045 (Jun. 13, 2003)
- NY030046 (Jun. 13, 2003)
- NY030048 (Jun. 13, 2003)
- NY030049 (Jun. 13, 2003)
- NY030050 (Jun. 13, 2003)
- NY030051 (Jun. 13, 2003)
- NY030058 (Jun. 13, 2003)
- NY030060 (Jun. 13, 2003)
- NY030067 (Jun. 13, 2003)
- NY030072 (Jun. 13, 2003)
- NY030075 (Jun. 13, 2003)
- NY030077 (Jun. 13, 2003)

Volume II

District of Columbia
- DC030001 (Jun. 13, 2003)
- DC030003 (Jun. 13, 2003)

Maryland
- MD030008 (Jun. 13, 2003)
- MD030034 (Jun. 13, 2003)
- MD030036 (Jun. 13, 2003)
- MD030046 (Jun. 13, 2003)
- MD030048 (Jun. 13, 2003)
- MD030056 (Jun. 13, 2003)
- MD030057 (Jun. 13, 2003)

Virginia
- VA030014 (Jun. 13, 2003)
- VA30025 (Jun. 13, 2003)
- VA30033 (Jun. 13, 2003)
- VA30052 (Jun. 13, 2003)
- VA30074 (Jun. 13, 2003)
- VA30078 (Jun. 13, 2003)
- VA30079 (Jun. 13, 2003)
- VA30092 (Jun. 13, 2003)
- VA30099 (Jun. 13, 2003)

Volume III

Mississippi
- MS030003 (Jun. 13, 2003)

Tennessee
- TN030006 (Jun. 13, 2003)

Volume IV

Illinois
- IL030002 (Jun. 13, 2003)
- IL030005 (Jun. 13, 2003)
- IL030015 (Jun. 13, 2003)
- IL030016 (Jun. 13, 2003)
- IL030021 (Jun. 13, 2003)
- IL030022 (Jun. 13, 2003)
- IL030026 (Jun. 13, 2003)
- IL030028 (Jun. 13, 2003)
- IL030029 (Jun. 13, 2003)
- IL030033 (Jun. 13, 2003)
- IL030034 (Jun. 13, 2003)
- IL030039 (Jun. 13, 2003)
- IL030043 (Jun. 13, 2003)
- IL030044 (Jun. 13, 2003)
- IL030056 (Jun. 13, 2003)
- IL030058 (Jun. 13, 2003)
- IL030060 (Jun. 13, 2003)
- IL030062 (Jun. 13, 2003)
- IL030063 (Jun. 13, 2003)
- IL030064 (Jun. 13, 2003)
- IL030068 (Jun. 13, 2003)

Indian
- IN030001 (Jun. 13, 2003)
- IN030002 (Jun. 13, 2003)
- IN030003 (Jun. 13, 2003)
- IN030004 (Jun. 13, 2003)
- IN030005 (Jun. 13, 2003)
- IN030006 (Jun. 13, 2003)
- IN030007 (Jun. 13, 2003)
- IN030009 (Jun. 13, 2003)
- IN030010 (Jun. 13, 2003)
- IN030011 (Jun. 13, 2003)
- IN030012 (Jun. 13, 2003)
- IN030014 (Jun. 13, 2003)
- IN030015 (Jun. 13, 2003)
- IN030016 (Jun. 13, 2003)
- IN030019 (Jun. 13, 2003)
- IN030020 (Jun. 13, 2003)
- IN030021 (Jun. 13, 2003)

Ohio
- OH030001 (Jun. 13, 2003)
- OH030002 (Jun. 13, 2003)
- OH030003 (Jun. 13, 2003)

OH030004 (Jun. 13, 2003)
OH030005 (Jun. 13, 2003)
OH030008 (Jun. 13, 2003)
OH030009 (Jun. 13, 2003)
OH030012 (Jun. 13, 2003)
OH030013 (Jun. 13, 2003)
OH030020 (Jun. 13, 2003)
OH030023 (Jun. 13, 2003)
OH030028 (Jun. 13, 2003)
OH030029 (Jun. 13, 2003)
OH030032 (Jun. 13, 2003)
OH030033 (Jun. 13, 2003)
OH030035 (Jun. 13, 2003)
OH030036 (Jun. 13, 2003)
OH030037 (Jun. 13, 2003)
OH030038 (Jun. 13, 2003)
Wisconsin
WI030019 (Jun. 13, 2003)

Volume V

Arkansas
AR030003 (Jun. 13, 2003)
Iowa
IA030002 (Jun. 13, 2003)
IA030005 (Jun. 13, 2003)
IA030008 (Jun. 13, 2003)
IA030009 (Jun. 13, 2003)
IA030012 (Jun. 13, 2003)
IA030018 (Jun. 13, 2003)
IA030019 (Jun. 13, 2003)
IA030020 (Jun. 13, 2003)
IA030025 (Jun. 13, 2003)
IA030028 (Jun. 13, 2003)
IA030029 (Jun. 13, 2003)
IA030031 (Jun. 13, 2003)
IA030038 (Jun. 13, 2003)
IA030040 (Jun. 13, 2003)
IA030045 (Jun. 13, 2003)
IA030047 (Jun. 13, 2003)
IA030054 (Jun. 13, 2003)
IA030059 (Jun. 13, 2003)
Kansas
KS030006 (Jun. 13, 2003)
KS030012 (Jun. 13, 2003)
Louisiana
LA030002 (Jun. 13, 2003)
LA030004 (Jun. 13, 2003)
LA030008 (Jun. 13, 2003)
LA030009 (Jun. 13, 2003)
LA030012 (Jun. 13, 2003)
LA030015 (Jun. 13, 2003)
Texas
TX030007 (Jun. 13, 2003)

Volume VI

None

Volume VII

Arizona
AZ030008 (Jun. 13, 2003)
California
CA030001 (Jun. 13, 2003)
CA030002 (Jun. 13, 2003)
CA030019 (Jun. 13, 2003)
CA030023 (Jun. 13, 2003)
CA030025 (Jun. 13, 2003)
CA030028 (Jun. 13, 2003)
CA030031 (Jun. 13, 2003)
CA030033 (Jun. 13, 2003)
CA030035 (Jun. 13, 2003)
CA030036 (Jun. 13, 2003)
CA030037 (Jun. 13, 2003)
Hawaii
HI030001 (Jun. 13, 2003)

General Wage Determination Publication

General wage determinations issued under the Davis-Bacon and Related Acts, including those noted above, may be found in the Government Printing Office (GPO) document entitled ''General Wage Determinations issued Under the Davis-Bacon and Related Acts''. This publication is available at each of the 50 Regional Government Depository Libraries and many of the 1,400 Government Depository Libraries across the country.

General wage determinations issued under the Davis-Bacon and Related Acts are available electronically at no cost on the Government Printing Office site at *www.access.gpo.gov/davisbacon.* They are also available electronically by subscription to the Davis-Bacon Online Service (*http://davisbacon.fedworld.gov)* of the National Technical Information Service (NTIS) of the U.S. Department of Commerce at 1–800–363–2068. This subscription offers value-added features such as electronic delivery of modified wage decisions directly to the user's desktop, the ability to access prior wage decisions issued during the year, extensive Help Desk support, etc.

Hard-copy subscriptions may be purchased from: Superintendent of Documents, U.S. Government Printing Office, Washington, DC 20402, (202) 512–1800.

When ordering hard-copy subscription(s), be sure to specify the State(s) of interest, since subscriptions may be ordered for any or all of the six separate Volumes, arranged by State. Subscriptions include an annual edition (issued in January of February) which includes all current general wage determinations for the States covered by each volume. Throughout the remainder of the year, regular weekly updates will be distributed to subscribers.

Signed at Washington, DC, this 8th day of July, 2004.

John Frank,

Acting Chief, Branch of Construction Wage Determinations.

[FR Doc. 04–15830 Filed 7–15–04; 8:45 am]

BILLING CODE 4510–27–M

DEPARTMENT OF LABOR

Occupational Safety and Health Administration

[Docket No. ICR–1218–0208 (2004)]

Standard on the Storage and Handling of Anhydrous Ammonia; Extension of the Office of Management and Budget's Approval of Information Collection (Paperwork) Requirements

AGENCY: Occupational Safety and Health Administration (OSHA), Labor.

ACTION: Request for comment.

SUMMARY: OSHA solicits public comments concerning its request for an extension of the information-collection requirements contained in its Standard on the Storage and Handling of Anhydrous Ammonia (29 CFR 1910.111 (the ''Standard'')). Paragraphs (b)(3) and (b)(4) of the Standard have paperwork requirements that apply to nonrefrigerated containers and systems and refrigerated containers, respectively. Employers use these containers and systems to store and transfer anhydrous ammonia in the workplace.

DATES: Comments must be submitted by the following dates:

Hard Copy: Your comments must be submitted (postmarked or received) by September 14, 2004.

Facsimile and electronic transmissions: Your comments must be received by September 14, 2004.

ADDRESSES:

I. Submission of Comments

Regular mail, express delivery, hand-delivery, and messenger service: Submit your written comments and attachments to the OSHA Docket Office, Docket No. ICR–1218–0208(2004), U.S. Department of Labor, Room N–2625, 200 Constitution Ave, NW., Washington, DC 20210; OSHA Docket Office and Department of Labor hours of operation are 8:15 a.m. to 4:45 p.m., e.s.t.

Facsimile: If your comments, including any attachments, are 10 pages or fewer, you may fax them to the OSHA Docket Office at (202) 693–1648. You must include the docket number, ICR 1218–0208(2004), in your comments.

Electronic: You may submit comments, but not attachments, through the Internet at *http://ecomments.osha.gov.*

II. Obtaining Copies of the Supporting Statement for the Information Collection Request

The Supporting Statement for the Information Collection Request is

available for downloading from OSHA's Web site at *http://www.osha.gov.* The supporting statement is available for inspection and copying in the OSHA Docket Office, at the address listed above. A printed copy of the supporting statement can be obtained by contacting Theda Kenney at (202) 693–2222.

FOR FURTHER INFORMATION CONTACT: Theda Kenney, Directorate of Standards and Guidance, OSHA, U.S. Department of Labor, Room N–3609, 200 Constitution Avenue, NW., Washington, DC 20210; telephone (202) 693–2222.

SUPPLEMENTARY INFORMATION:

I. Submission of Comments on This Notice and Internet Access to Comments and Submissions

You may submit comments in response to this document by (1) hard copy, (2) fax transmission (facsimile), or (3) electronically through the OSHA webpage. Please note you cannot attach materials such as studies or journal articles to electronic comments. If you have additional materials, you must submit three copies of them to the OSHA Docket Office at the address above. The additional materials must clearly identify your electronic comments by name, date, subject and docket number so that we can attach them to your comments. Because of security-related problems there may be a significant delay in the receipt of comments by regular mail. Please contact the OSHA Docket Office at (202) 693–2350 for information about security procedures concerning the delivery of materials by express delivery, hand delivery and messenger service.

II. Background

The Department of Labor, as part of its continuing effort to reduce paperwork and respondent (*i.e.,* employer) burden, conducts a preclearance consultation program to provide the public with an opportunity to comment on proposed and continuing information collection requirements in accordance with the Paperwork Reduction Act of 1995 (PRA–95) (44 U.S.C. 3506(c)(2)(A)).

This program ensures that information is in the desired format, reporting burden (time and costs) is minimized, collection instruments are understandable, and OSHA's estimate of the information-collection burden is correct. The Occupational Safety and Health Act of 1970 (the Act) authorizes information collection by employers as necessary or appropriate for enforcement of the Act or for developing information regarding the causes and prevention of occupational injuries, illnesses, and accidents (29 U.S.C. 657).

Paragraph (b)(3) of the Standard specifies that systems have nameplates if required, and that these nameplates ''be permanently attached to the system (as specified by paragraph (b)(3)(ii)(j)) so as to be readily accessible for inspection * * *.'' In addition, this paragraph requires that markings on containers and systems covered by paragraphs (c) (''Systems utilizing stationary, nonrefrigerated storage containers''), (f) (''Tank motor vehicles for the transportation of ammonia''), (g) (''Systems mounted on farm vehicles other than for the application of ammonia''), and (h) (''Systems mounted on farm vehicles for the application of ammonia'') provide information regarding nine specific characteristics of the containers and systems. Similarly, paragraph (b)(4) of the Standard specifies that refrigerated containers be marked with a nameplate on the outer covering in an accessible place which provides information regarding eight specific characteristics of the container.

The required markings ensure that employers use only properly designed and tested containers and systems to store anhydrous ammonia, thereby, preventing accidental release of, and exposure of employees to, this highly toxic and corrosive substance. In addition, these requirements provide the most efficient means for an OSHA compliance officer to ensure that the containers and systems are safe.

III. Special Issues for Comment

OSHA has a particular interest in comments on the following issues:

- Whether the proposed information-collection requirements are necessary for the proper performance of the Agency's functions, including whether the information is useful;
- The accuracy of OSHA's estimate of the burden (time and costs) of the information-collection requirements, including the validity of the methodology and assumptions used;
- The quality, utility, and clarity of the information collected; and
- Ways to minimize the burden on employers who must comply; for example, by using automated or other technological information-collection and -transmission techniques.

IV. Proposed Actions

OSHA is proposing to decrease the existing burden-hour estimate, and to extend the Office of Management and Budget's (OMB) approval, of the collection-of-information requirements specified in paragraphs (b)(3) and (b)(4) of the Standard on the Storage and Handling of Anhydrous Ammonia. In this regard, the Agency is proposing to decrease the current burden-hour estimate from 2,500 hours to 345 hours, for a total adjustment decrease of 2,155 burden hours.

OSHA will summarize the comments submitted in response to this notice, and will include this summary in its request to OMB to extend the approval of these information collection requirements.

Type of Review: Extension of a currently-approved information collection.

Title: Storage and Handling of Anhydrous Ammonia (29 CFR 1910.111).

OMB Number: 1218–0208.

Affected Public: Business or other for-profit; not-for-profit institutions; farms; Federal government; State, local or tribal governments.

Number of Respondents: 2,030.

Frequency: On occasion.

Average Time per Response: 10 minutes (.17 hours).

Estimated Total Burden Hours: 345 hours.

Estimated Cost (Operation and Maintenance): $0.

V. Authority and Signature

John L. Henshaw, Assistant Secretary of Labor for Occupational Safety and Health, directed the preparation of this notice. The authority for this notice is the Paperwork Reduction Act of 1995 (44 U.S.C. 3506) and Secretary of Labor's Order No. 5–2002 (67 FR 65008).

Signed at Washington, DC on July 12th, 2004.

John L. Henshaw,

Assistant Secretary of Labor.

[FR Doc. 04–16187 Filed 7–15–04; 8:45 am]

BILLING CODE 4510–26–M

NATIONAL FOUNDATION FOR THE ARTS AND HUMANITIES

Institute of Museum and Library Services; Proposed Collection, Comment Request, Program Guidelines

ACTION: Notice of requests for information collection.

SUMMARY: The Institute of Museum and Library Services as part of its continuing effort to reduce paperwork and respondent burden, conducts a pre-clearance consultation program to provide the general public and federal agencies with an opportunity to comment on proposed and/or continuing collections of information in accordance with the Paperwork Reduction Act of 1995 (PRA95) [44

U.S.C. 3508(2)(A)]. This program helps to ensure that requested data can be provided in the desired format, reporting burden (time and financial resources) is minimized, collection instruments are clearly understood, and the impact of collection requirements on respondents can be properly assessed. Currently the Institute of Museum and Library Services is soliciting comments concerning the proposed collection of application information for two grant programs: 21st Century Museum Professionals and Native American/Native Hawaiian Museum Services.

A copy of the proposed information collection request can be obtained by contacting the individual listed below in the **ADDRESSES** section of this notice.

DATES: Written comments must be submitted to the office listed in the **ADDRESSES** section below on or before September 14, 2004.

IMLS is particularly interested in comments that help the agency to:

- Evaluate whether the proposed collection of information is necessary for the proper performance of the functions of the agency, including whether the information will have practical utility;
- Evaluate the accuracy of the agency's estimate of the burden of the proposed collocation of information including the validity of the methodology and assumptions used;
- Enhance the quality, utility and clarity of the information to be collected; and
- Minimize the burden of the collection of information on those who are to respond, including through the use of appropriate automated electronic, mechanical, or other technological collection techniques or other forms of information technology, *e.g.,* permitting electronic submissions of responses.

ADDRESSES: Send comments to: Barbara Smith, Technology Officer, Institute of Museum and Library Services, 1100 Pennsylvania Ave., NW., Room 223, Washington, DC 20506. Ms. Smith can be reached on Telephone: 202–606–5254 Fax: 202–606–0395 or by e-mail at *bsmith@imls.gov.*

SUPPLEMENTARY INFORMATION:

Background

The Institute of Museum and Library Services is an independent Federal grant-making agency authorized by the Museum and Library Services Act, 20 U.S.C. Section 91021, *et seq.* The IMLS provides a variety of grant programs to assist the nation's museums and libraries in improving their operations and enhancing their services to the public. Museums and libraries of all sizes and types may receive support from IMLS programs. The Museum and Library Services Act, 20 U.S.C. Section 9101, *et seq.* authorizes the Director of the Institute of Museum and Library Services to make grants to museums and other entities as the Director considers appropriate, and to Indian tribes and to organizations that primarily serve and represent Native Hawaiians.

I. The Museum and Library Services Act states that the purpose of Subtitle C—Museum Services is:

(1) To encourage and support museums in carrying out their public service role of connecting the whole of society to the cultural, artistic, historical, natural, and scientific understandings that constitute our heritage;

(2) To encourage and support museums in carrying out their educational role, as core providers of learning and in conjunction with schools, families, and communities;

(3) To encourage leadership, innovation, and applications of the most current technologies and practices to enhance museum services;

(4) To assist, encourage, and support museums in carrying out their stewardship responsibilities to achieve the highest standards in conservation and care of the cultural, historic, natural, and scientific heritage of the United States to benefit future generations;

(5) To assist, encourage, and support museums in achieving the highest standards of management and service to the public, and to ease the financial burden borne by museums as a result of their increasing use by the public; and

(6) To support resource sharing and partnerships among museums, libraries, schools, and other community organizations.

20 U.S.C. 9171. The 21st Century Museum Professionals and Native American/Native Hawaiian Museum Services grant programs are part of IMLS activities to achieve these purposes.

II. Current Actions

To administer these programs of grants, cooperative agreements and contracts, IMLS must develop application guidelines, reports and customer service surveys.

Agency: Institute of Museum and Library Services.

Title: Application Guidelines.

OMB Number: n/a.

Agency Number: 3137.

Frequency: Annually.

Affected Public: Museums, museum organizations, Indian tribes and to organizations that primarily serve and represent Native Hawaiians.

Number of Respondents: 150.

Estimated Time Per Respondent: 10–35 hours.

Total Burden Hours: 2750.

Total Annualized Capital/Startup Costs: 0.

Total Annual Costs: 0.

FOR FURTHER INFORMATION CONTACT: Rebecca Danvers, Director of the Office of Research and Technology, Institute of Museum and Library Services, 1100 Pennsylvania Avenue, NW., Washington, DC 20506, telephone (202) 606–2478.

Dated: July 13, 2004.

Rebecca Danvers,

Director, Office of Research and Technology

[FR Doc. 04–16196 Filed 7–15–04; 8:45 am]

BILLING CODE 7036–01–M

NUCLEAR REGULATORY COMMISSION

[Docket No. 50–219]

AmerGen Energy Company, LLC, Oyster Creek Nuclear Generating Station; Exemption

1.0 Background

AmerGen Energy Company, LLC (the licensee), is the holder of Facility Operating License No. DPR–16, which authorizes operation of the Oyster Creek Nuclear Generating Station (OCNGS), a boiling-water reactor facility, located in Ocean County, New Jersey. The license provides, among other things, that the facility is subject to all rules, regulations, and orders of the U.S. Nuclear Regulatory Commission (NRC, the Commission) now or hereafter in effect.

2.0 Request/Action

Title 10 of the Code of Federal Regulations (10 CFR) part 50, paragraph 50.71(e)(4) requires that licensees provide the NRC with updates to the Updated Final Safety Analysis Report (UFSAR) annually or 6 months after each refueling outage provided the interval between successive updates does not exceed 24 months. The revisions must reflect changes up to 6 months prior to the date of filing. This regulation would require the licensee to submit the next OCNGS UFSAR update by April 25, 2005, which is 24 months after the most recent update (April 25, 2003).

By letter dated March 26, 2004, the licensee requested a one-time schedular exemption from the requirements of 10 CFR 50.71(e)(4), extending the filing date by ''approximately 6 months.'' This one-time schedular exemption would

thus extend the 24-month interval between the last and next filing to be 30 months. Since the licensee last submitted an update on April 25, 2003, this proposed one-time, 6-month extension would permit the next update to be as late as October 25, 2005. The requirement to reflect changes up to 6 months prior to the date of filing is unaffected by this exemption, and would still apply.

The licensee also requested a permanent schedular exemption to allow filing of all future UFSAR updates up to 12 months, instead of 6 months, after completion of a refueling outage. Thus, accordingly to the licensee's current refueling schedule, this would permit the licensee to file future updates in the fall of odd-numbered years.

3.0 Discussion

In its March 26, 2004, application, the licensee stated that following the schedular requirements of 10 CFR 50.72(e)(4) literally means that the licensee has to file both OCNGS and Peach Bottom Atomic Power Station (PBAPS, owned by the licensee's parent company, Exelon) UFSAR updates in the same time frame (*i.e.*, spring) of odd-numbered years. Such filing schedule for both OCNGS and PBAPS constitutes a hardship for the licensee and its parent company Exelon; additional temporary resources would have to be employed in order to simultaneously prepare both OCNGS and PBAPS updates. Such additional resource expenditure does not contribute to increased nuclear safety.

Pursuant to 10 CFR 50.12, the Commission may, upon application by any interested person, or upon its own initiative, grant exemptions from the requirements of 10 CFR part 50, when (1) the exemptions are authorized by law, will not present an undue risk to public health or safety, and are consistent with the common defense and security; and (2) when special circumstances are present. Section 50.12(a)(2)(iii) of 10 CFR part 50 indicates that special circumstances exist when compliance with a regulation would result in undue hardship significantly in excess of those contemplated when the regulation was adopted, or that are significantly in excess of those incurred by others similarly situated. In the licensee's case, a special circumstance exists because of the hardship described above, and the special circumstance requirement of section 50.12(a)(2)(iii) of 10 CFR part 50 is satisfied.

The requested schedular exemptions are administrative and would not affect plant equipment, operation, or procedures. The UFSAR is simply a repository document that contains the analysis, assumptions, and technical details of facility design and operating parameters. Until the UFSAR is updated, the recent design and operational changes are documented in the licensee's safety analysis reports, and in the Commission's Safety Evaluations for changes requiring prior approval. Changes to a facility or its operation are effected through processes defined in regulations other than 10 CFR 50.71, such as, 10 CFR 50.90, 10 CFR 50.59, and 10 CFR 50.54. These regulations provide the basis for evaluating proposed changes and ensuring that the changes will not present an undue risk to the public health and safety, and are consistent with the common defense and security. The UFSAR, and its periodic updates, only reflect changes that have already been implemented under various processes prescribed by other NRC regulations such as those cited above. Consequently, extending the due date for the filing of UFSAR updates does not present an undue risk to the public health and safety.

4.0 Conclusion

Accordingly, the Commission has determined that, pursuant to 10 CFR 50.12(a), the exemptions are authorized by law, will not endanger life or property or common defense and security, and are, otherwise, in the public interest. Therefore, the Commission hereby grants the licensee exemptions from the requirements of 10 CFR part 50, paragraph 50.71(e)(4) for OCNGS. Specifically, the licensee is granted a one-time exemption to delay the next UFSAR update to 30 months after the last update, instead of the 24 months allowed by the regulation, to October 25, 2005, and a permanent exemption to file all future UFSAR updates up to 12 months after completion of a refueling outage, instead of the 6 months allowed by the regulation.

Pursuant to 10 CFR 51.32, the Commission has determined that the granting of this exemption will not have a significant effect on the quality of the human environment (69 FR 40989).

This exemption is effective upon issuance.

Dated in Rockville, Maryland, this 9th day of July, 2004.

For the Nuclear Regulatory Commission.

Ledyard B. Marsh,

Director, Division of Licensing Project Management, Office of Nuclear Reactor Regulation.

[FR Doc. 04–16155 Filed 7–15–04; 8:45 am]

BILLING CODE 7590–01–P

PEACE CORPS

Privacy Act of 1974; Systems of Records

AGENCY: Peace Corps.

ACTION: Notice of establishment of new system of records.

SUMMARY: Pursuant to the Privacy Act of 1974, the Peace Corps is issuing public notice of its proposal to add a new system of records. This notice provides information required under the Privacy Act on the new systems of records.

DATES: Comments must be received by August 25, 2004. The new system of records will be effective July 26, 2004, unless the Peace Corps receives comments that require a different determination.

ADDRESSES: Written comments should be addressed to Emilie Deady, Office of Medical Services, Peace Corps, 1111 20th Street, NW., Washington, DC 20526. Comments may also be sent electronically to the following e-mail address: *edeady@peacecorps.gov.* Written comments should refer to Privacy Act Systems of Records Notices, and if sent electronically, should contain this reference on the subject line.

FOR FURTHER INFORMATION CONTACT: Emilie Deady, Deputy Director, Office of Medical Services, Peace Corps, 1111 20th Street, NW., Washington, DC 20526, 202–692–1500.

SUPPLEMENTARY INFORMATION: Title 5 U.S.C. 552a(e)(4) and (11) provide that the public be given a 30-day period in which to comment on routine uses of information in each system of records. The Office of Management and Budget (OMB), which has oversight responsibility under the Act, requires a 40-day period in which to review modifications to an agency's systems of records. The public, OMB, and Congress are invited to comment on the new system of records. The new system of records is PC–26—Antimalaria Tolerance Survey

Routine Uses. The Agency's General Routine Uses Applicable to More than One System of Records are published in 65 FR 53773 to 53774, September 5, 2000.

System Notices.

PC–26

SYSTEM NAME:

Antimalaria Tolerance Survey.

SYSTEM LOCATION:

Office of Medical Services, Peace Corps, 1111 20th St., NW., Washington, DC 20526.

CATEGORIES OF INDIVIDUALS COVERED BY THE SYSTEM:

Peace Corps Volunteers (PCVs) who serve in areas with widespread chloroquine-resistant P. falciparum (CRPF) malaria.

CATEGORIES OF RECORDS IN THE SYSTEM:

Personal identifiers, geographical region and country, names of medications, possible side effects from medication, and behavioral activities.

AUTHORITY FOR MAINTENANCE OF THE SYSTEM:

The Peace Corps Act, 22 U.S.C. 2501 *et seq.*

PURPOSE:

To study and better understand the factors that influence antimalarial medication compliance. These records will be used by the staff of the Surveillance and Epidemiology Unit of the Office of Medical Services to collect, analyze and evaluate data from the surveys to determine the effectiveness of in-country health care.

ROUTINE USES OF RECORDS MAINTAINED IN THE SYSTEM, INCLUDING CATEGORIES OF USERS AND THE PURPOSES OF SUCH USES:

General routine uses E, F, G, and H apply to this system.

RECORDS MAY ALSO BE DISCLOSED TO:

1. The data from the surveys may be disclosed to the Centers for Disease Control and Prevention (CDC).
2. Data in aggregate form may be disclosed to the Department of State and the Department of Defense.

POLICIES AND PRACTICES FOR STORING, RETRIEVING, ACCESSING, RETAINING, AND DISPOSING OF RECORDS IN THE SYSTEM:

STORAGE:

On paper and in a computerized database.

RETRIEVABILITY:

By personal identifier, assigned country, type of medication, side effects, behavioral activity types.

SAFEGUARDS:

Paper records are maintained in a lockable cabinet. Computer records are maintained in a secure, password-protected computer system. All records are maintained in secure, access-controlled areas or buildings.

RETENTION AND DISPOSAL:

The records will be maintained for three years after completion of the study. The records will be destroyed in accordance with the Peace Corps records management policy.

SYSTEM MANAGER(S) AND ADDRESS:

Director, Office of Medical Services, Peace Corps, 1111 20th Street, NW, Washington, DC 20526.

NOTIFICATION, ACCESS, AND CONTESTING RECORD PROCEDURES:

Any individual who wants to know whether this system of records contains a record about him or her, who wants access to his or her record, or who wants to contest the contents of a record, should make a written request to the System Manager. Requesters will be required to provide adequate identification, such as a driver's license, employee identification card, or other identifying document. Additional identification may be required in some instances. Requests for correction or amendment must identify the record to be changed and the corrective action sought. Complete Peace Corps Privacy Act procedures are set out in 22 CFR part 308.

RECORD SOURCE CATEGORIES:

Record subject.

Dated: July 8, 2004.

Tyler S. Posey,

General Counsel.

[FR Doc. 04–16026 Filed 7–15–04; 8:45 am]

BILLING CODE 6015–01–P

SECURITIES AND EXCHANGE COMMISSION

Proposed Collection; Comment Request

Upon written request, copies available from: Securities and Exchange Commission, Office of Filings and Information Services, Washington, DC 20549.

Extension: Rule 17a–4(b)(11); SEC File No. 270–449; OMB Control No. 3235–0506.

Notice is hereby given that pursuant to the Paperwork Reduction Act of 1995 (44 U.S.C. 3501 *et seq.*), the Securities and Exchange Commission (''Commission'') is soliciting comments on the collection of information summarized below. The Commission plans to submit this existing collection of information to the Office of Management and Budget for extension and approval.

Rule 17a–4(b)(11) (17 CFR 240.17a–4(b)(11)) under the Securities Exchange Act of 1934 (''Act'') describes the record preservation requirements for those records required to be kept pursuant to Rule 17a–3(a)(16) under the Act, including how such records should be kept and for how long, to be used in monitoring compliance with the Commission's financial responsibility program and antifraud and antimanipulative rules as well as other rules and regulations of the Commission and the self-regulatory organizations. It is estimated that approximately 105 active broker-dealer respondents registered with the Commission incur an average burden of 315 hours per year (105 respondents multiplied by 3 burden hours per respondent equals 315 total burden hours) to comply with this rule.

Written comments are invited on: (a) Whether the proposed collection of information is necessary for the proper performance of the functions of the agency, including whether the information shall have practical utility; (b) the accuracy of the agency's estimate of the burden of the proposed collection of information; (c) ways to enhance the quality, utility, and clarity of the information to be collected; and (d) ways to minimize the burden of the collection of information on respondents, including through the use of automated collection techniques or other forms of information technology. Consideration will be given to comments and suggestions submitted in writing within 60 days of this publication.

Direct your written comments to R. Corey Booth, Director/Chief Information Officer, Office of Information Technology, Securities and Exchange Commission, 450 5th Street, NW., Washington, DC 20549.

Dated: July 8, 2004.

Margaret H. McFarland,

Deputy Secretary.

[FR Doc. 04–16132 Filed 7–15–04; 8:45 am]

BILLING CODE 8010–01–P

SECURITIES AND EXCHANGE COMMISSION

Proposed Collection; Comment Request

Upon written request, copies available from: Securities and Exchange Commission, Office of Filings and Information Services, Washington, DC 20549.

Extension: Rule 17a–3(a)(16); SEC File No. 270–452; OMB Control No. 3235–0508.

Notice is hereby given that pursuant to the Paperwork Reduction Act of 1995 (44 U.S.C. 3501 *et seq.*), the Securities and Exchange Commission (''Commission'') is soliciting comments on the collection of information summarized below. The Commission plans to submit this existing collection of information to the Office of Management and Budget for extension and approval.

Rule 17a–3(a)(16) (17 CFR 240.17a–3(a)(16)) under the Securities Exchange Act of 1934 identifies the records required to be made by broker-dealers that operate internal broker-dealer systems. Those records are to be used in monitoring compliance with the Commission's financial responsibility program and antifraud and antimanipulative rules, as well as other rules and regulations of the Commission and the self-regulatory organizations. It is estimated that approximately 105 active broker-dealer respondents registered with the Commission incur an average burden of 2,835 hours per year (105 respondents multiplied by 27 burden hours per respondent equals 2,835 total burden hours) to comply with this rule.

Written comments are invited on: (a) Whether the proposed collection of information is necessary for the proper performance of the functions of the agency, including whether the information shall have practical utility; (b) the accuracy of the agency's estimate of the burden of the proposed collection of information; (c) ways to enhance the quality, utility, and clarity of the information to be collected; and (d) ways to minimize the burden of the collection of information on respondents, including through the use of automated collection techniques or other forms of information technology. Consideration will be given to comments and suggestions submitted in writing within 60 days of this publication.

Direct your written comments to R. Corey Booth, Director/Chief Information Officer, Office of Information Technology, Securities and Exchange Commission, 450 5th Street, NW., Washington, DC 20549.

Dated: July 8, 2004.

Margaret H. McFarland,

Deputy Secretary.

[FR Doc. 04–16133 Filed 7–15–04; 8:45 am]

BILLING CODE 8010–01–P

SECURITIES AND EXCHANGE COMMISSION

[Release No. 34–50000; File No. SR–ISE–2004–13]

Self-Regulatory Organizations; Notice of Filing and Immediate Effectiveness of Proposed Rule Change by the International Securities Exchange, Inc. to Adopt an Anti-Money Laundering Rule

July 9, 2004.

Pursuant to Section 19(b)(1) of the Securities Exchange Act of 1934 (the ''Act''),[1] and Rule 19b–4 thereunder,[2] notice is hereby given that on June 10, 2004, the International Securities Exchange, Inc. (''Exchange'' or ''ISE'') filed with the Securities and Exchange Commission (''SEC'' or ''Commission'') the proposed rule change as described in Items I and II below, which Items have been prepared by ISE. On July 7, 2004 ISE submitted Amendment No. 1 to the proposed rule change.[3] ISE filed the proposed rule change pursuant to Section 19(b)(3)(A) of the Act[4] and Rule 19b–4(f)(6) thereunder,[5] which renders the proposal effective upon filing with the Commission. The Commission is publishing this notice to solicit comments on the proposed rule change from interested persons.

I. Self-Regulatory Organization's Statement of the Terms of Substance of the Proposed Rule Change

ISE is proposing to adopt Rule 420 regarding anti-money laundering. Below is the text of the proposed rule change. Proposed new language is in *italics.*

* * * * *

Rule 420. Anti-Money Laundering Compliance Program

Each Member shall develop and implement a written anti-money laundering program reasonably designed to achieve and monitor the Member's compliance with the requirements of the Bank Secrecy Act (31 U.S.C. 5311, et seq.) and the implementing regulations promulgated thereunder by the Department of the Treasury. Each Member's anti-money laundering program must be approved, in writing, by the Member's senior management. The anti-money laundering programs required by this Rule shall, at a minimum,

(a) Establish and implement policies and procedures that can be reasonably expected to detect and cause the reporting of transactions required under 31 U.S.C. 5318(g) and the implementing regulations thereunder;

(b) Establish and implement policies, procedures, and internal controls reasonably designed to achieve compliance with the Bank Secrecy Act and the implementing regulations thereunder;

(c) Provide for independent testing for compliance to be conducted by the Member's personnel or by a qualified outside party;

(d) Designate and identify to the Exchange (by name, title, mailing address, e-mail address, telephone number, and facsimile number) an individual or individuals responsible for implementing and monitoring the day-to-day operations and internal controls of the program, and provide prompt notification to the Exchange regarding any change in such designation(s); and

(e) Provide ongoing training for appropriate personnel.

In the event that any of the provisions of this Rule 420 conflict with any of the provisions of another, applicable self-regulatory organization's rule requiring the development and implementation of an anti-money laundering compliance program, the provisions of the rule of the Member's Designated Examining Authority shall apply.

* * * * *

II. Self-Regulatory Organization's Statement of the Purpose of, and Statutory Basis for, the Proposed Rule Change

In its filing with the Commission, the ISE included statements concerning the purpose of and basis for the proposed rule change and discussed any comments it received on the proposed rule change. The text of these statements may be examined at the places specified in Item IV below. The ISE has prepared summaries, set forth in sections A, B, and C below, of the most significant aspects of such statements.

A. Self-Regulatory Organization's Statement of the Purpose of, and Statutory Basis for, the Proposed Rule Change

1. Purpose

In response to the events of September 11, 2001, President Bush signed into law on October 26, 2001, the

[1] 15 U.S.C. 78s(b)(1).

[2] 17 CFR 240.19b–4.

[3] In Amendment No. 1, the ISE clarified that if the proposed rule conflicts with another, applicable self-regulatory organization's rule requiring the development and implementation of an anti-money laundering compliance program, the provisions of the rule of the Member's Designated Examining Authority shall apply. *See* Letter and attached amendment from Michael Simon to Nancy Sanow, Division of Market Regulation, Commission, dated July 7, 2004 (''Amendment No. 1'').

[4] 15 U.S.C. 78s(b)(3)(A).

[5] 17 CFR 240.19b–4(f)(6).

Uniting and Strengthening America by Providing Appropriate Tools Required to Intercept and Obstruct Terrorism Act of 2001 (the ''Patriot Act'')[6] to address terrorist threats through enhanced domestic security measures. Among other things the Patriot Act expanded law enforcement surveillance powers, increased information sharing among law enforcement and financial institutions, and broadened anti-money laundering requirements. The Patriot Act amends, among other laws, the Bank Secrecy Act, as set forth in Title 31 of the United States Code.[7] Certain provisions of Title III of the Patriot Act, also known as the International Money Laundering Abatement and Anti-Terrorist Financing Act of 2001 (''MLAA''), impose affirmative obligations on a broad range of financial institutions, including broker-dealers, specifically requiring the establishment of anti-money laundering monitoring and supervisory programs.

MLAA Section 352 requires all financial institutions (including broker-dealers) to establish anti-money laundering programs that include, at a minimum: (i) Internal policies, procedures and controls; (ii) the specific designation of an anti-money laundering compliance officer; (iii) an ongoing employee training program; and (iv) an independent audit function to test the anti-money laundering program.

The Commission has approved NASD's and several other exchanges' proposals to adopt rules requiring their members and member organizations to establish anti-money laundering compliance programs with the minimum standards described above.[8] Proposed ISE Rule 420, entitled ''Anti-Money Laundering Compliance Program'' involves similar requirements. Adoption of the proposed rule would establish a regulatory framework for members and member organizations to comply with the requirements of the Patriot Act in this area. Member and member organizations subject to and in compliance with NASD Rule 3011 or NYSE Rule 445 will be considered in compliance with ISE Rule 420.

2. Statutory Basis

The basis under the Act for this proposed rule change is the requirement under Section 6(b)(5)[9] that an exchange have rules that are designed to remove impediments to and perfect the mechanism for a free and open market and a national market system, and, in general, to protect investors and the public interest.

B. Self-Regulatory Organization's Statement on Burden on Competition

The proposed rule change does not impose any burden on competition that is not necessary or appropriate in furtherance of the purposes of the Act.

C. Self-Regulatory Organization's Statement on Comments on the Proposed Rule Change Received from Members, Participants or Others

The Exchange has not solicited, and does not intend to solicit, comments on this proposed rule change. The Exchange has not received any unsolicited written comments from members or other interested parties.

III. Date of Effectiveness of the Proposed Rule Change and Timing for Commission Action

The ISE has designated the proposed rule change as one that does not: (i) Significantly affect the protection of investors or the public interest; (ii) does not impose any significant burden on competition; and (iii) does not become operative for 30 days or such shorter time as the Commission may designate if consistent with the protection of investors and the public interest. Therefore it has become effective pursuant to Section 19(b)(3)(A) of the Act[10] and Rule 19b–4(f)(6) thereunder.[11] At any time within 60 days of the filing of the proposed rule change, the Commission may summarily abrogate the rule change if it appears to the Commission that the action is necessary or appropriate in the public interest, for the protection of investors, or otherwise in furtherance of the purposes of the Act. For purposes of calculating the 60-day abrogation period, the Commission considers the proposed rule change to have been filed on July 7, 2004 when Amendment No. 1 was filed.[12]

Pursuant to Rule 19b–4(f)(6)(iii) under the Act,[13] the proposal may not become operative for 30 days after the date of its filing, or such shorter time as the Commission may designate if consistent with the protection of investors and the public interest, and the Exchange must file notice of its intent to file the proposed rule change at least five business days beforehand. The Exchange has requested that the Commission waive the five-day pre-filing requirement and the 30-day operative delay so that the proposed rule change will become immediately effective upon filing.

The Commission believes that waiving the five-day pre-filing provision and the 30-day operative delay is consistent with the protection of investors and the public interest.[14] Waiving the pre-filing requirement and accelerating the operative date will merely establish a framework for ISE members and member organizations to comply with the requirements of the Patriot Act in this area in a manner similar to that of the NASD and NYSE. For these reasons, the Commission designates the proposed rule change as effective and operative immediately.

IV. Solicitation of Comments

Interested persons are invited to submit written data, views, and arguments concerning the foregoing, including whether the proposed rule change is consistent with the Act. Comments may be submitted by any of the following methods:

Electronic Comments

- Use the Commission's Internet comment form (*http://www.sec.gov/rules/sro.shtml*); or
- Send an E-mail to *rule-comments@sec.gov. Please include File Number SR–ISE–2004–13 on the subject line.*

Paper Comments

- Send paper comments in triplicate to Jonathan G. Katz, Secretary, Securities and Exchange Commission, 450 Fifth Street, NW., Washington, DC 20549–0609.

All submissions should refer to File Number SR–ISE–2004–13. This file number should be included on the subject line if e-mail is used. To help the Commission process and review your comments more efficiently, please use only one method. The Commission will post all comments on the Commission's Internet Web site (*http://www.sec.gov/rules/sro.shtml*). Copies of the submission, all subsequent amendments, all written statements with respect to the proposed rule change that are filed with the Commission, and all written

[6] Uniting and Strengthening America by Providing Appropriate Tools Required to Intercept and Obstruct Terrorism Act of 2001, Pub. L. 107–56, 115 Stat. 272 (2001).

[7] 31 U.S.C. 5311, *et seq.*

[8] See, *e.g.*, Securities Exchange Act Release No. 45798 (April 22, 2002), 67 FR 20854 (April 26, 2002) (Order approving SR–NASD–2002–24 and SR–NYSE–2002–10).

[9] 15 U.S.C. 78f(b)(5).

[10] 15 U.S.C. 78s(b)(3)(A).

[11] 17 CFR 240.19b–4(f)(6).

[12] *See* note 3, *supra.*

[13] 17 CFR 240.19b–4(f)(6)(iii).

[14] For purposes only of accelerating the operative date of this proposal, the Commission has considered the proposed rule's impact on efficiency, competition, and capital formation. 15 U.S.C. 78c(f).

communications relating to the proposed rule change between the Commission and any person, other than those that may be withheld from the public in accordance with the provisions of 5 U.S.C. 552, will be available for inspection and copying in the Commission's Public Reference Section, 450 Fifth Street, NW., Washington, DC 20549. Copies of such filing also will be available for inspection and copying at the principal office of the ISE. All comments received will be posted without change; the Commission does not edit personal identifying information from submissions. You should submit only information that you wish to make available publicly. All submissions should refer to File Number SR–ISE–2004–13 and should be submitted on or before August 6, 2004.

For the Commission, by the Division of Market Regulation, pursuant to delegated authority.[15]

Margaret H. McFarland,

Deputy Secretary.

[FR Doc. 04–16181 Filed 7–15–04; 8:45 am]

BILLING CODE 8010–01–P

SECURITIES AND EXCHANGE COMMISSION

[Release No. 34–49998; File No. SR–NSX–2004–10]

Self-Regulatory Organizations; Notice of Filing and Order Granting Accelerated Approval of Proposed Rule Change and Amendment Nos. 1 and 2 Thereto by National Stock Exchange Relating to Corporate Governance

July 9, 2004.

Pursuant to Section 19(b)(1) of the Securities Exchange Act of 1934 (''Act''),[1] and Rule 19b–4 thereunder,[2] notice is hereby given that on June 17, 2004, National Stock Exchange (''NSX'' or ''Exchange'') filed with the Securities and Exchange Commission (''SEC'' or ''Commission'') the proposed rule change as described in Items I and II below, which Items have been prepared by the Exchange. On June 29, 2004, the Exchange filed Amendment No. 1 to the proposal.[3] On July 9, 2004, the Exchange filed Amendment No. 2 to the proposal.[4] On July 9, 2004, the Exchange filed Amendment No. 3 to the proposed rule change.[5] The Commission is publishing this notice to solicit comments on the proposed rule change from interested persons and is approving the proposal on an accelerated basis.

I. Self-Regulatory Organization's Statement of the Terms of Substance of the Proposed Rule Change

The Exchange is proposing to adopt changes to its listings standards that are aimed to ensure the independence of directors of listed companies and to strengthen corporate governance practices of listed companies.

Below is the text of the proposed rule change, as amended. Proposed new language is in *italics;* proposed deletions are in brackets.

* * * * *

RULES OF NATIONAL STOCK EXCHANGE

* * * * *

CHAPTER XIII

Miscellaneous Provisions

* * * * *

Rule 13.6.

(a) General Application. Companies listed on the Exchange must comply with certain standards regarding corporate governance as codified in this Rule 13.6. Consistent with requirements of the Sarbanes-Oxley Act of 2002, certain provisions of this Rule 13.6 are applicable to some listed companies but not to others.

(1) Equity Listings. Rule 13.6 applies in full to all companies listing common equity securities, with the following exceptions:

(a) Controlled Companies. A company of which more than 50% of the voting power is held by an individual, a group or another company need not comply with the requirements of Rule 13.6(d)(1), (4) or (5). A controlled company that chooses to take advantage of any or all of these exemptions must disclose that choice, that it is a controlled company and the basis for the determination in its annual proxy statement or, if the company does not file an annual proxy statement, in the company's annual report on Form 10–K filed with the Commission. Controlled companies must comply with the remaining provisions of Rule 13.6.

(b) Limited Partnerships and Companies in Bankruptcy. Due to their unique attributes, limited partnerships and companies in bankruptcy proceedings need not comply with the requirements of Rule 13.6(d)(1), (4) or (5). However, all limited partnerships (at the general partner level) and companies in bankruptcy proceedings must comply with the remaining provisions of Rule 13.6.

(c) Closed-End and Open-End Funds. The Exchange considers that many of the significantly expanded standards and requirements provided for in Rule 13.6 to be unnecessary for closed-end and open-end management investment companies that are registered under the Investment Company Act of 1940, given the pervasive federal regulation applicable to them. However, registered closed-end funds must comply with the requirements of Rule 13.6(d)(6), (7)(a) and (c), and (12). Note, however, that in view of the common practice to utilize the same directors for boards in the same fund complex, closed-end funds will not be required to comply with the disclosure requirement in the second paragraph of the Interpretations and Policies to Rule 13.6(d)(7)(a) which calls for disclosure of the board's determination with respect to simultaneous service on more than three public company audit committees. However, the other provisions of that paragraph will apply.

Business development companies, which are a type of closed-end management investment company defined in Section 2(a)(48) of the Investment Company Act of 1940 that are not registered under that Act, are required to comply with all of the provisions of Rule 13.6 applicable to domestic issuers other than Rule 13.6(d)(2) and (7)(b). For purposes of Rule 13.6(d)(1), (3), (4), (5), and (9), a director of a business development company shall be considered to be independent if he or she is not an ''interested person'' of the company, as defined in Section 2(a)(19) of the Investment Company Act of 1940.

As required by Rule 10A–3 under the Act, open-end funds (which can be listed as Investment Company Units, more commonly known as Exchange Traded Funds or ETFs) are required to

---

[15] 17 CFR 200.30–3(a)(12).

[1] 15 U.S.C. 78s(b)(l).

[2] 17 CFR 240. 19b–4.

[3] *See* letter from Jennifer M. Lamie, Assistant General Counsel and Corporate Secretary, NSX, to Nancy J. Sanow, Assistant Director, Division of Market Regulation, Commission, dated June 28, 2004 (''Amendment No.1''). In Amendment No. 1, the Exchange clarified the date on which the Exchange's Board of Trustees approved the proposed rule change and made technical changes to the proposed rule text. Amendment No. 1 replaced the original filing in its entirety.

[4] *See* letter from Jennifer M. Lamie, Assistant General Counsel and Corporate Secretary, NSX, to Nancy J. Sanow, Assistant Director, Division of Market Regulation, Commission, dated July 8, 2004 (''Amendment No. 2''). The changes made by Amendment No. 2 are incorporated in the proposal as set forth below.

[5] *See* letter from Jennifer M. Lamie, Assistant General Counsel and Corporate Secretary, NSX, to Nancy J. Sanow, Assistant Director, Division of Market Regulation, Commission, dated July 9, 2004 (''Amendment No. 3''). Amendment No. 3 was a technical amendment and is not subject to notice and comment.

comply with the requirements of Rule 13.6(d)(6) and (12)(b).

Rule 10A–3(b)(3)(ii) under the Act requires that each audit committee must establish procedures for the confidential, anonymous submission by employees of the listed issuer of concerns regarding questionable accounting or auditing matters. In view of the external management structure often employed by closed-end and open-end funds, the Exchange also requires the audit committees of such companies to establish such procedures for the confidential, anonymous submission by employees of the investment adviser, administrator, principal underwriter, or any other provider of accounting related services for the management investment company, as well as employees of the management investment company. This responsibility must be addressed in the audit committee charter.

(d) Other Entities. Except as otherwise required by Rule 10A–3 under the Act (for example, with respect to open-end funds), Rule 13.6 does not apply to passive business organizations in the form of trusts (such as royalty trusts) or to derivatives and special purpose securities. To the extent that Rule 10A–3 applies to a passive business organization, listed derivative or special purpose security, such entities are required to comply with Rule 13.6(d)(6) and (12)(b).

(e) Foreign Private Issuers. Listed companies that are foreign private issuers (as such term is defined in Rule 3b–4 under the Act) are permitted to follow home country practice in lieu of the provisions of this Rule 13.6, except that such companies are required to comply with the requirements of Rule 13.6(d)(6), (11) and (12)(b).

(2) Preferred and Debt Listings. Rule 13.6 does not generally apply to companies listing only preferred or debt securities on the Exchange. To the extent required by Rule 10A–3 under the Act, all companies listing only preferred or debt securities on the Exchange are required to comply with the requirements of Rule 13.6(d)(6) and (12)(b).

(3) Dual and Multiple Listings. At any time when an issuer has a class of securities that is listed on a national securities exchange or national securities association subject to requirements substantially similar to those set forth in this Rule 13.6, and that class of security has not been suspended from trading on that market, the issuer shall not be required to separately meet the requirements set forth in this Rule 13.6, except for the requirements of Rule 13(d)(6) and (7), below (audit committees) and with the notification requirements of Rule 13.6(d)(12)(B), as it relates to their audit committees, with respect to that class of securities or any other class of securities. Governance requirements of other markets will be considered to be substantially similar to the requirements of this Rule 13.6 if they are adopted by the New York Stock Exchange (''NYSE'') or the National Association of Securities Dealers (for the Nasdaq National Market or SmallCap Market) or if they otherwise require, subject to exceptions approved by the Commission, that the issuer maintain (a) a board of directors, a majority of whom are independent directors (50% of whom are independent directors, for a small business issuer); (2) a nominating committee or other body, a majority of whom are independent directors; (3) a compensation committee or other body, a majority of whom are independent directors; and (4) a code of business conduct and ethics that complies with the definition of a ''code of ethics'' set out in Section 406(c) of the Sarbanes-Oxley Act and the rules thereunder (17 CFR 228.406 and 17 CFR 229.406).

Similarly, when an issuer has a class of securities that is listed on a national securities exchange or national securities association subject to requirements substantially similar to those set forth in this Rule 13.6, and that class of security has not been suspended from trading on that market, a direct or indirect consolidated subsidiary of the issuer, or an at least 50% beneficially-owned subsidiary of the issuer, shall not be required to separately meet the requirements set forth in this Rule 13.6 with respect to any class of securities it issues, except classes of equity securities (other than non-convertible, non-participating preferred securities) of such subsidiary.

(b) Effective Dates/Transition Periods. Listed companies will have until the earlier of their first annual meeting after July 31, 2004, or December 31, 2004, to comply with the new standards contained in Rule 13.6, although if a company with a classified board would be required (other than by virtue of a requirement under Rule 13.6(d)(6)) to change a director who would not normally stand for election in such annual meeting, the company may continue such director in office until the second annual meeting after such date, but no later than December 31, 2005. In addition, foreign private issuers will have until July 31, 2005, to comply with the new audit committee standards set out in Rule 13.6(d)(6). As a general matter, the existing audit committee requirements provided for in Subsection 1.4 of Article IV of the Exchange By-Laws continue to apply to listed companies pending the transition to these new rules.

Companies listing in conjunction with their initial public offering will be permitted to phase in their independent nomination and compensation committees on the same schedule as is permitted pursuant to Rule 10A–3 under the Act for audit committees, that is one independent member at the time of listing, a majority of independent members within 90 days of listing and fully independent committees within one year. It should be noted, however, that investment companies are not afforded these exemptions under Rule 10A–3 under the Act. Companies listing in conjunction with their initial public offering will be required to meet the majority independent board requirement within 12 months of listing. For purposes of Rule 13.6 other than Rule 13.6(d)(6) and (12)(b), a company will be considered to be listing in conjunction with an initial public offering if, immediately prior to listing, it does not have a class of common stock registered under the Act. The Exchange will also permit companies that are emerging from bankruptcy or have ceased to be controlled companies within the meaning of Rule 13.6 to phase in independent nomination and compensation committees and majority independent boards on the same schedule as companies listing in conjunction with an initial public offering. However, for purposes of Rule 13.6(d)(6) and (12)(b), a company will be considered to be listing in conjunction with an initial public offering only if it meets the conditions of Rule 10A–3(b)(1) (iv) (a) under the Act, namely, that the company was not, immediately prior to the effective date of a registration statement, required to file reports with the Commission pursuant to Section 13(a) or 15(d) of the Act.

Companies listing upon transfer from another market, or that are listing a security that is listed on another market or markets, have 12 months from the date of transfer in which to comply with any requirement to the extent the market on which they were listed did not have the same requirement. To the extent the other market has a substantially similar requirement but also had a transition period from the effective date of that market's rule, which period had not yet expired, the company will have the same transition period as would have been available to it on the other market. This transition period for companies transferring from another market or that are dually or multiply listing securities will not apply

to the requirements of Rule 13.6(d)(6) unless a transition period is available pursuant to Rule 10A–3 under the Act.

(c) References to Form 10–K. There are provisions in this Rule 13.6 that call for disclosure in a company's Form 10–K under certain circumstances. If a company subject to such a provision is not a company required to file a Form 10–K, then the provision shall be interpreted to mean the annual periodic disclosure form that the company does file with the Commission. For example, for a closed-end fund, the appropriate form would be the annual Form N–CSR.

(d) Listed Company Corporate Governance Requirements.

(1) Listed companies must have a majority of independent directors. Interpretations and Policies: Effective boards of directors exercise independent judgment in carrying out their responsibilities. Requiring a majority of independent directors will increase the quality of board oversight and lessen the possibility of damaging conflicts of interest.

(2) In order to tighten the definition of ''independent director'' for purposes of these standards:

(a) No director qualifies as ''independent'' unless the board of directors affirmatively determines that the director has no material relationship with the listed company (either directly or as a partner, shareholder or officer of an organization that has a relationship with the company). Companies must disclose these determinations.

Interpretations and Policies: It is not possible to anticipate, or explicitly to provide for, all circumstances that might signal potential conflicts of interest, or that might bear on the materiality of a director's relationship to a listed company (references to ''company'' would include any parent or subsidiary in a consolidated group with the company). Accordingly, it is best that boards making ''independence'' determinations broadly consider all relevant facts and circumstances. In particular, when assessing the materiality of a director's relationship with the company, the board should consider the issue not merely from the standpoint of the director, but also from that of persons or organizations with which the director has an affiliation. Material relationships can include commercial, industrial, banking, consulting, legal, accounting, charitable and familial relationships, among others. However, as the concern is independence from management, the Exchange does not view ownership of even a significant amount of stock, by itself, as a bar to an independence finding.

The directors who have been determined to be independent must be disclosed in the company's annual proxy statement or, if the company does not file an annual proxy statement, in the company's annual report on Form 10-K filed with the Commission. The basis for a board determination that a relationship is not material must also be disclosed in the company's annual proxy statement or, if the company does not file an annual proxy statement, in the company's annual report on Form 10-K filed with the Commission. In this regard, a board may adopt and disclose categorical standards to assist it in making determinations of independence and may make a general disclosure if a director meets these standards. Any determination of independence for a director who does not meet these standards must be specifically explained. A company must disclose any standard it adopts. It may then make the general statement that the independent directors meet the standards set by the board without detailing particular aspects of the immaterial relationships between individual directors and the company. In the event that a director with a business or other relationship that does not fit within the disclosed standards is determined to be independent, a board must disclose the basis for its determination in the manner described above. This approach provides investors with an adequate means of assessing the quality of a board's independence and its independence determinations while avoiding excessive disclosure of immaterial relationships.

(b) In addition:

(i) A director who is an employee, or whose immediate family member is an executive officer, of the company is not independent until three years after the end of such employment relationship.

Interpretations and Policies: Employment as an interim Chairman or CEO shall not disqualify a director from being considered independent following that employment.

(ii) A director who receives, or whose immediate family member receives, more than $100,000 per year in direct compensation from the listed company, other than director and committee fees and pension or other forms of deferred compensation for prior service (provided such compensation is not contingent in any way on continued service), is not independent until three years after he or she ceases to receive more than $100,000 per year in such compensation.

Interpretations and Policies: Compensation received by a director for former service as an interim Chairman or CEO need not be considered in determining independence under this test. Compensation received by an immediate family member for service as a non-executive employee of the listed company need not be considered in determining independence under this test.

(iii) A director who is affiliated with or employed by, or whose immediate family member is affiliated with or employed in a professional capacity by, a present or former internal or external auditor of the company is not ''independent'' until three years after the end of the affiliation or the employment or auditing relationship.

(iv) A director who is employed, or whose immediate family member is employed, as an executive officer of another company where any of the listed company's present executives serve on that company's compensation committee is not ''independent'' until three years after the end of such service or the employment relationship.

(v) A director who is an executive officer or an employee, or whose immediate family member is an executive officer, of a company that makes payments to, or receives payments from, the listed company for property or services in an amount which, in any single fiscal year, exceeds the greater of (A) $200,000, (B) 5% of such other company's consolidated gross revenues, or (C), for companies whose securities are also listed on the NYSE, the amount permitted under NYSE rules, is not ''independent'' until three years after falling below such threshold.

Interpretations and Policies: In applying the test in Rule 13.6(d)(2)(b)(v), both the payments and the consolidated gross revenues to be measured shall be those reported in the last completed fiscal year. The look-back provision for this test applies solely to the financial relationship between the listed company and the director or immediate family member's current employer; a listed company need not consider former employment of the director or immediate family member.

Charitable organizations shall not be considered ''companies'' for purposes of Rule 13.6(d)(2)(b)(v), provided however that a listed company shall disclose in its annual proxy statement, or if the listed company does not file an annual proxy statement, in the company's annual report on Form 10–K filed with the Commission, any charitable contributions made by the listed company to any charitable organization in which a director serves as an executive officer if, within the preceding three years, contributions in any single

fiscal year exceeded the greater of (A) $200,000, (B) 5% of such charitable organization's consolidated gross revenues, or (C), for companies whose securities are also listed on the NYSE, the amount permitted under NYSE rules. Listed company boards are reminded of their obligations to consider the materiality of any such relationship in accordance with Rule 13.6(d)(2)(a) above.

General Interpretations and Policies to Rule 13.6(d)(2)(b): An ''immediate family member'' includes a person's spouse, parents, children, siblings, mothers and fathers-in-law, sons and daughters-in-law, brothers and sisters-in-law, and anyone (other than domestic employees) who shares such person's home. When applying the look back provisions in Rule 13.6(d)(2)(b), listed companies need not consider individuals who are no longer immediate family members as a result of legal separation or divorce, or those who have died or become incapacitated. In addition, references to the ''company'' would include any parent or subsidiary in a consolidated group with the company.

Transition Rule. Each of the above standards contains a three-year ''look-back'' provision. In order to facilitate a smooth transition to the new independence standards, the Exchange will phase in the ''look-back'' provisions by applying only a one-year look-back for the first year after adoption of these new standards. The three-year look-backs provided for in Rule 13.6(d)(2)(b) will begin to apply on from and after July 9, 2005.

As an example, until July 8, 2005, a company need look back only one year when testing compensation under Rule 13.6(d)(2)(b)(ii). Beginning July 9, 2005, however, the company would need to look back the full three years provided in Rule 13.6(d)(2)(b)(ii).

(3) To empower non-management directors to serve as a more effective check on management, the non-management directors of each company must meet at regularly scheduled executive sessions without management.

Interpretations and Policies: To promote open discussion among the non-management directors, companies must schedule regular executive sessions in which those directors meet without management participation. ''Non-management'' directors are all those who are not company officers (as that term is defined in Rule 16a–a(f) under the Securities Act of 1933), and includes such directors who are not independent by virtue of a material relationship, former status or family membership, or for any other reason.

Regular scheduling of such meetings is important not only to foster better communication among non-management directors, but also to prevent any negative inference from attaching to the calling of executive sessions. There need not be a single presiding director at all executive sessions of the non-management directors. If one director is chosen to preside at these meetings, his or her name must be disclosed in the company's annual proxy statement or, if the company does not file an annual proxy statement, in the company's annual report on Form 10–K filed with the Commission. Alternatively, a company may disclose the procedure by which a presiding director is selected for each executive session. For example, a company may wish to rotate the presiding position among the chairs of board committees.

In order that interested parties may be able to make their concerns known to the non-management directors, a company must disclose a method for such parties to communicate directly with the presiding director or with the non-management directors as a group. Companies may, if they wish, utilize for this purpose the same procedures they have established to comply with the requirement of Rule 10A–3 (b)(3) under the Act, as applied to listed companies through Rule 13.6(d)(6).

While this Rule 13.6(d)(3) refers to meetings of non-management directors, if that group includes directors who are not independent under this Rule 13.6, listed companies should at least once a year schedule an executive session including only independent directors.

(4)(a) Listed companies must have a nominating/corporate governance committee composed entirely of independent directors.

(b) The nominating/corporate governance committee must have a written charter that addresses:

(i) the committee's purpose and responsibilities—which at minimum, must be to: Identify individuals qualified to become board members, consistent with criteria approved by the board, and to select, or to recommend that the board select, the director nominees for the next annual meeting of shareholders; develop and recommend to the board a set of corporate governance principles applicable to the corporation; and oversee the evaluation of the board and management; and

(ii) an annual performance evaluation of the committee.

Interpretations and Policies: A nominating/corporate governance committee is central to the effective functioning of the board. New director and board committee nominations are among a board's most important functions. Placing this responsibility in the hands of an independent nominating/corporate governance committee can enhance the independence and quality of nominees. The committee is also responsible for taking a leadership role in shaping the corporate governance of a corporation.

If a company is legally required by contract or otherwise to provide third parties with the ability to nominate directors (for example, preferred stock rights to elect directors upon a dividend default, shareholder agreements, and management agreements), the selection and nomination of such directors need not be subject to the nominating committee process.

The nominating/corporate governance committee charter should also address the following items: Committee member qualifications; committee member appointment and removal; committee structure and operations (including authority to delegate to subcommittees); and committee reporting to the board. In addition, the charter should give the nominating/corporate governance committee sole authority to retain and terminate any search firm to be used to identify director candidates, including sole authority to approve the search firm's fees and other retention terms.

Boards may allocate the responsibilities of the nominating/corporate governance committee to committees of their own denomination, provided that the committees are composed entirely of independent directors. Any such committee must have a published committee charter.

(5) (a) Listed companies must have a compensation committee composed entirely of independent directors.

(b) The compensation committee must have a written charter that addresses:

(i) the committee's purpose and responsibilities—which at minimum must be to have direct responsibility to:

(A) review and approve corporate goals and objectives relevant to CEO compensation, evaluate the CEO's performance in light of those goals and objectives, and, either as a committee or together with the other independent directors (as directed by the board), determine and approve the CEO's compensation level based on this evaluation; and

(B) make recommendations to the board with respect to non-CEO compensation, incentive compensation plans and equity-based plans; and

(C) produce a compensation committee report on executive compensation as required by the Commission to be included in the

company's annual proxy statement or annual report on Form 10–K filed with the Commission;

(ii) an annual performance evaluation of the compensation committee.

Interpretations and Policies: In determining the long-term incentive component of CEO compensation, the committee should consider the company's performance and relative shareholder return, the value of similar incentive awards to CEOs at comparable companies, and the awards given to the listed company's CEO in past years. To avoid confusion, note that the compensation committee is not precluded from approving awards (with or without ratification of the board) as may be required to comply with applicable tax laws.

The compensation committee charter should also address the following items: Committee member qualifications; committee member appointment and removal; committee structure and operations (including authority to delegate to subcommittees); and committee reporting to the board.

Additionally, if a compensation consultant is to assist in the evaluation of director, CEO or senior executive compensation, the compensation committee charter should give that committee sole authority to retain and terminate the consulting firm, including sole authority to approve the firm's fees and other retention terms.

Boards may allocate the responsibilities of the compensation committee to committees of their own denomination, provided that the committees are composed entirely of independent directors. Any such committee must have a published committee charter.

Nothing in this provision should be construed as precluding discussion of CEO compensation with the board generally, as it is not the intent of this standard to impair communication among members of the board.

(6) Listed companies must have an audit committee that satisfies the requirements of Rule 10A–3 under the Act and Subsection 1.4 of Article IV of the Exchange By-Laws.

Interpretations and Policies: The Exchange will apply the requirements of Rule 10A–3 in a manner consistent with the guidance provided by the Commission in Securities Exchange Act Release No. 34–47654 (April 1, 2003). Without limiting the generality of the foregoing, as provided in Section 1.4(d) of Article IV of the Exchange By-Laws, the Exchange will provide companies the opportunity to cure defects provided in Rule 10A–3(a)(3) under the Act.

(7) (a) In accordance with Subsection 1.4(a)(1) of Article IV of the Exchange By-Laws, the audit committee must have a minimum of three members.

Interpretations and Policies: Each member of the audit committee must be financially literate, as such qualification is interpreted by the company's board in its business judgment, or must become financially literate within a reasonable period of time after his or her appointment to the audit committee. In addition, at least one member of the audit committee must have accounting or related financial management expertise, as the company's board interprets such qualification in its business judgment. While the Exchange does not require that a listed company's audit committee include a person who satisfies the definition of audit committee financial expert set out in Item 401(h) of Regulation S–K, a board may presume that such a person has accounting or related financial management expertise.

Because of the audit committee's demanding role and responsibilities, and the time commitment attendant to committee membership, each prospective audit committee member should evaluate carefully the existing demands on his or her time before accepting this important assignment. Additionally, if an audit committee member simultaneously serves on the audit committees of more than three public companies, and the listed company does not limit the number of audit committees on which its audit committee members serve, then in each case, the board must determine that such simultaneous service would not impair the ability of such member to effectively serve on the listed company's audit committee and disclose such determination in the company's annual proxy statement or, if the company does not file an annual proxy statement, in the company's annual report on Form 10–K filed with the Commission.

(b) In addition to any requirement of Rule 10A–3(b)(1) of the Act, all audit committee members must satisfy the requirements for independence set out in Rule 13.6(d)(2).

(c) In accordance with Subsection 1.4(a)(2) of Article IV of the Exchange By-Laws, the audit committee must have a written charter. In addition to the requirements of Subsection 1.4(a)(2) of Article IV, the charter must address the following:

(i) the committee's purpose—which, at minimum, must be to:

(A) assist board oversight of (1) the integrity of the company's financial statements, (2) the company's compliance with legal and regulatory requirements, (3) the independent auditor's qualifications and independence and (4) the performance of the company's internal audit function and independent auditors; and

(B) prepare an audit committee report as required by the Commission to be included in the company's annual proxy statement;

(ii) an annual performance evaluation of the audit committee; and

(iii) the duties and responsibilities of the audit committee—which, at a minimum must include those set out in Rule 10A–3(b)(2), (3), (4) and (5) of the Act and in Subsection 1.4 of Article IV of the Exchange By-Laws, as well as include that the committee:

(A) at least annually, obtain and review a report by the independent auditor describing: The firm's internal quality-control procedures; any material issues raised by the most recent internal quality-control review, or peer review, of the firm or by any inquiry or investigation by governmental or professional authorities, within the preceding five years, respecting one or more independent audits carried out by the firm, and any steps taken to deal with any such issues; and (to assess the auditor's independence) all relationships between the independent auditor and the company;

Interpretations and Policies: After reviewing the foregoing report and the independent auditor's work throughout the year, the audit committee will be in a position to evaluate the auditor's qualifications, performance and independence. This evaluation should include the review and evaluation of the lead partner of the independent auditor. In making its evaluation, the audit committee should take into account the opinions of management and the company's internal auditors (or other personnel responsible for the internal audit function). In addition to assuring the regular rotation of the lead audit partner as required by law, the audit committee should further consider whether, in order to assure continuing auditor independence, there should be regular rotation of the audit firm itself. The audit committee should present its conclusions with respect to the independent auditor to the full board.

(B) discuss the company's annual audited financial statements and quarterly financial statements with management and the independent auditor, including the company's disclosures under "Management's Discussion and Analysis of Financial Condition and Results of Operations"

(C) discuss the company's earnings press releases, as well as financial information and earnings guidance

provided to analysts and rating agencies;

Interpretations and Policies: The audit committee's responsibility to discuss earnings releases, as well as financial information and earnings guidance, may be done generally (i.e., discussion of the types of information to be disclosed and the type of presentation to be made). The audit committee need not discuss in advance each earnings release or each instance in which a company may provide earnings guidance.

(D) discuss policies with respect to risk assessment and risk management;

Interpretations and Policies: While it is the job of the CEO and senior management to assess and manage the company's exposure to risk, the audit committee must discuss guidelines and policies to govern the process by which this is handled. The audit committee should discuss the company's major financial risk exposures and the steps management has taken to monitor and control such exposures. The audit committee is not required to be the sole body responsible for risk assessment and management, but, as stated above, the committee must discuss guidelines and policies to govern the process by which risk assessment and management is undertaken. Many companies, particularly financial companies, manage and assess their risk through mechanisms other than the audit committee. The processes these companies have in place should be reviewed in a general manner by the audit committee, but they need not be replaced by the audit committee.

(E) meet separately, periodically, with management, with internal auditors (or other personnel responsible for the internal audit function) and with independent auditors;

Interpretations and Policies: To perform its oversight functions most effectively, the audit committee must have the benefit of separate sessions with management, the independent auditors and those responsible for the internal audit function. As noted herein, all listed companies must have an internal audit function. These separate sessions may be more productive than joint sessions in surfacing issues warranting committee attention.

(F) review with the independent auditor any audit problems or difficulties and management's response;

Interpretations and Policies: The audit committee must regularly review with the independent auditor any difficulties the auditor encountered in the course of the audit work, including any restrictions on the scope of the independent auditor's activities or on access to requested information, and any significant disagreements with management. Among the items the audit committee may want to review with the auditor are: Any accounting adjustments that were noted or proposed by the auditor but were ''passed'' (as immaterial or otherwise); any communications between the audit team and the audit firm's national office respecting auditing or accounting issues presented by the engagement; and any ''management'' or ''internal control'' letter issued, or proposed to be issued, by the audit firm to the company. The review should also include discussion of the responsibilities, budget and staffing of the company's internal audit function.

(G) set clear hiring policies for employees or former employees of the independent auditors; and

Interpretations and Policies: Employees or former employees of the independent auditor are often valuable additions to corporate management. Such individuals' familiarity with the business, and personal rapport with the employees, may be attractive qualities when filling a key opening. However, the audit committee should set hiring policies taking into account the pressures that may exist for auditors consciously or subconsciously seeking a job with the company they audit.

(H) report regularly to the board of directors.

Interpretations and Policies: The audit committee should review with the full board any issues that arise with respect to the quality or integrity of the company's financial statements, the company's compliance with legal or regulatory requirements, the performance and independence of the company's independent auditors, or the performance of the internal audit function. General Interpretations and Policies to Rule 13.6(d)(7)(c): While the fundamental responsibility for the company's financial statements and disclosures rests with management and the independent auditor, the audit committee must review: (A) major issues regarding accounting principles and financial statement presentations, including any significant changes in the company's selection or application of accounting principles, and major issues as to the adequacy of the company's internal controls and any special audit steps adopted in the light of material control deficiencies; (B) analyses prepared by management and/or the independent auditor setting forth significant financial reporting issues and judgments made in connection with the preparation of the financial statements, including analyses of the effects of alternative GAAP methods on the financial statements; (C) the effect of regulatory and accounting initiatives, as well as off-balance sheet structures, on the financial statements of the company; and (D) the type and presentation of information to be included in earnings press releases (paying particular attention to any use of ''pro forma,'' or ''adjusted'' non-GAAP, information), as well as review any financial information and earnings guidance provided to analysts and rating agencies.

(d) Each listed company must have an internal audit function.

Interpretations and Policies: Listed companies must maintain an internal audit function to provide management and the audit committee with ongoing assessments of the company's risk management process and system of internal control. A company may choose to outsource this function to a third-party service provider other than its independent auditor. General Interpretations and Policies to Rule 13.6(d)(7): To avoid any confusion, note that the audit committee functions specified in Rule 13.6(d)(7) are the sole responsibility of the audit committee and may not be allocated to a different committee.

(8) Listed companies must satisfy the requirements for shareholder approval of equity compensation plans in accordance with Exchange Rule 13.7.

(9) Listed companies must adopt and disclose corporate governance guidelines.

Interpretations and Policies: No single set of guidelines would be appropriate for every company, but certain key areas of universal importance include director qualifications and responsibilities, responsibilities of key board committees, and director compensation. Given the importance of corporate governance, each listed company's website must include its corporate governance guidelines and the charters of its most important committees (including at least the audit, and if applicable, compensation and nominating committees). Each company's annual report on Form 10-K filed with the Commission must state that the foregoing information is available on its website, and that the information is available in print to any shareholder who requests it. Making this information publicly available should promote better investor understanding of the company's policies and procedures, as well as more conscientious adherence to them by directors and management.

The following subjects must be addressed in the corporate governance guidelines:

(A) Director qualification standards. These standards should, at minimum, reflect the independence requirements set forth in Rule 13.6(d)(1) and (2). Companies may also address other substantive qualification requirements, including policies limiting the number of boards on which a director may sit, and director tenure, retirement and succession.

(B) Director responsibilities. These responsibilities should clearly articulate what is expected from a director, including basic duties and responsibilities with respect to attendance at board meetings and advance review of meeting materials.

(C) Director access to management and, as necessary and appropriate, independent advisors.

(D) Director compensation. Director compensation guidelines should include general principles for determining the form and amount of director compensation (and for reviewing those principles as appropriate). The board should be aware that questions as to directors' independence may be raised when directors' fees and emoluments exceed what is customary. Similar concerns may be raised when the company makes substantial charitable contributions to organizations in which a director is affiliated, or enters into consulting contracts with (or provides other indirect forms of compensation to) a director. The board should critically evaluate each of these matters when determining the form and amount of director compensation, and the independence of a director.

(E) Director orientation and continuing education.

(F) Management succession. Succession planning should include policies and principles for CEO selection and performance review, as well as policies regarding succession in the event of an emergency or the retirement of the CEO.

(G) Annual performance evaluation of the board. The board should conduct a self-evaluation at least annually to determine whether it and its committees are functioning effectively.

(10) Listed companies must adopt and disclose a code of business conduct and ethics for directors, officers and employees, and promptly disclose any waivers of the code for directors or executive officers.

Interpretations and Policies: No code of business conduct and ethics can replace the thoughtful behavior of an ethical director, officer or employee. However, such a code can focus the board and management on areas of ethical risk, provide guidance to personnel to help them recognize and deal with ethical issues, provide mechanisms to report unethical conduct, and help to foster a culture of honesty and accountability.

Each code of business conduct and ethics must require that any waiver of the code for executive officers or directors may be made only by the board or a board committee and must be promptly disclosed to shareholders. This disclosure requirement should inhibit casual and perhaps questionable waivers, and should help assure that, when warranted, a waiver is accompanied by appropriate controls designed to protect the company. It will also give shareholders the opportunity to evaluate the board's performance in granting waivers.

Each code of business conduct and ethics must also contain compliance standards and procedures that will facilitate the effective operation of the code. These standards should ensure the prompt and consistent action against violations of the code. Each listed company's website must include its code of business conduct and ethics. Each company's annual report on Form 10–K filed with the Commission must state that the foregoing information is available on its website and that the information is available in print to any shareholder who requests it. Each company may determine its own policies, but all listed companies should address the most important topics, including the following:

(A) Conflicts of interest. A ''conflict of interest'' occurs when an individual's private interest interferes in any way-or even appears to interfere-with the interests of the corporation as a whole. A conflict situation can arise when an employee, officer or director takes actions or has interests that may make it difficult to perform his or her company work objectively and effectively. Conflicts of interest also arise when an employee, officer or director, or a member of his or her family, receives improper personal benefits as a result of his or her position in the company. Loans to, or guarantees of obligations of, such persons are of special concern. The company should have a policy prohibiting such conflicts of interest, and providing a means for employees, officers and directors to communicate potential conflicts to the company.

(B) Corporate opportunities. Employees, officers and directors should be prohibited from (a) taking for themselves personally opportunities that are discovered through the use of corporate property, information or position; (b) using corporate property, information or position for personal gain; and (c) competing with the company. Employees, officers and directors owe a duty to the company to advance its legitimate interests when the opportunity to do so arises.

(C) Confidentially. Employees, officers and directors should maintain the confidentiality of information entrusted to them by the company or its customers, except when disclosure is authorized or legally mandated. Confidential information includes all non-public information that might be of use to competitors, or harmful to the company or its customers, if disclosed.

(D) Fair dealing. Each employee, officer and director should endeavor to deal fairly with the company's customers, suppliers, competitors and employees. None should take unfair advantage of anyone through manipulation, concealment, abuse of privileged information, misrepresentation of material facts, or any other unfair-dealing practice. Companies may write their codes in a manner that does not alter existing legal rights and obligations of companies and their employees, such as ''at will'' employment arrangements.

(E) Protection and proper use of company assets. All employees, officers and directors should protect the company's assets and ensure their efficient use. Theft, carelessness and waste have a direct impact on the company's profitability. All company assets should be used for legitimate business purposes.

(F) Compliance with laws, rules and regulations (including insider trading laws). The company should proactively promote compliance with laws, rules and regulations, including insider-trading laws. Insider trading is both unethical and illegal, and should be dealt with decisively.

(G) Encouraging the reporting of any illegal or unethical behavior. The company should proactively promote ethical behavior. The company should encourage employees to talk to supervisors, managers, or other appropriate personnel when in doubt about the best course of action in a particular situation. Additionally, employees should report violations of laws, rules, regulations or the code of business conduct to appropriate personnel. To encourage employees to report such violations, the company must ensure that employees know that the company will not allow retaliation for reports made in good faith.

(11) Listed foreign private issuers must disclose any significant ways in

which their corporate governance practices differ from those followed by domestic companies under the Exchange's listing standards.

Interpretations and Policies: Foreign private issuers must make their U.S. investors aware of the significant ways in which their home-country practices differ from those followed by domestic companies under the Exchange's listing standards. However, foreign private issuers are not required to present a detailed, item-by-item analysis of these differences. Such a disclosure would be long and unnecessarily complicated. Moreover, this requirement is not intended to suggest that one country's corporate governance practices are better or more effective than another. The Exchange believes the U.S. shareholders should be aware of the significant ways that the governance of a listed foreign private issuer differs from that of a U.S. listed company. The Exchange underscores that what is required is a brief, general summary of the significant differences, not a cumbersome analysis.

Listed foreign private issuers may provide this disclosure either on their website (provided it is in the English language and accessible from the United States) and/or in their annual report as distributed to shareholders in the United States (again, in the English language). If the disclosure is only made available on the website, the annual report shall so state and provide the web address at which the information may be obtained.

(12) (a) Each listed company CEO must certify to the Exchange each year that he or she is not aware of any violation by the company of Exchange corporate governance listing standards.

Interpretations and Policies: The CEO's annual certification to the Exchange that, as of the date of certification, he or she is unaware of any violation by the company of the Exchange's corporate governance listing standards will focus the CEO and senior management on the company's compliance with the listing standards. Both this certification to the Exchange, and any CEO/CFO certifications required to be filed with the Commission regarding the quality of the company's public disclosure must be disclosed in the company's annual report to shareholders or, if the company does not prepare an annual report to shareholders, in the companies annual report on Form 10–K filed with the Commission.

(b) Each listed company CEO must promptly notify the Exchange in writing after any executive officer of the listed company becomes aware of any material non-compliance with any applicable provisions of this Rule 13.6.

(13) The Exchange may issue a public reprimand letter to any listed company that violates an Exchange listing standard.

Interpretations and Policies: Suspending trading in or delisting a company can be harmful to the very shareholders that the Exchange listing standards seek to protect; the Exchange must therefore use these measures sparingly and judiciously. For this reason it is appropriate for the Exchange to have the ability to apply a lesser sanction to deter companies from violating its corporate governance (or other) listing standards. Accordingly, the Exchange may issue a public reprimand letter to any listed company, regardless of type of security listed or country of incorporation, that it determines has violated an Exchange listing standard. For companies that repeatedly or flagrantly violate Exchange listing standards, suspension and delisting remain the ultimate penalties. For clarification, this lesser sanction is not intended for use in the case of companies that fall below the financial and other continued listing standards provided in Article IV of the Exchange By-Laws or that fail to comply with the audit committee standards set out in Subsection 1.4 of Article IV of the Exchange By-Laws or Rule 13.6(d)(6). The process and procedures provided for in those provisions govern the treatment of companies falling below those standards.

Rule [13.6.]*13.7.* Shareholder Approval of Equity Compensation Plans

No change to text.

[Rule 13.7. Additional Listing Standards Related to Audit Committees

In addition to the requirements set forth in subsection 1.4 of Article IV of the By-laws, audit committees for investment companies must also establish procedures for the confidential, anonymous submission of concerns regarding questionable accounting or auditing matters by employees of the investment adviser, administrator, principal underwriter, or any other provider of accounting related services for the investment company, as well as employees of the investment company.]

* * * * *

II. Self-Regulatory Organization's Statement of the Purpose of, and Statutory Basis for, the Proposed Rule Change

In its filing with the Commission, the Exchange included statements concerning the purpose of and basis for the proposed rule change and discussed any comments it received on the proposed rule change. The text of these statements may be examined at the places specified in Item III below. The Exchange has prepared summaries, set forth in Sections A, B, and C below, of the most significant aspects of such statements.

A. Self-Regulatory Organization's Statement of the Purpose of, and the Statutory Basis for, the Proposed Rule Change

1. Purpose

The Exchange is proposing to enhance its listing standards in order to further the ability of honest and well-intentioned directors, officers, and employees of listed issuers to perform their functions effectively. NSX believes that the proposal will also allow shareholders to more easily and efficiently monitor the performance of companies and directors in order to reduce instances of lax and unethical behavior.

Last year, the Commission approved changes to NSX's listing standards that were primarily designed to comply with the provisions of Section 10A(m) of the Act[6] and Rule 10A–3 thereunder,[7] and to incorporate requirements related to shareholder approval of equity compensation plans.[8] The remaining provisions that the Exchange proposes, which are set out in this submission, include additional enhancements to the Exchange's governance requirements for listed companies. In most respects, the proposed changes are substantially similar to changes in governance requirements made by the New York Stock Exchange (''NYSE'').[9]

The NSX governance standards would apply generally to companies listing securities on the Exchange, with particular exemptions for certain issuers[10] as delineated below. Specific exemptions are included for dual and multiple listings, where the same or another class of security of the company is already listed on another national securities exchange or national securities association that has

[6] 15 U.S.C. 78j–1(m).

[7] 17 CFR 240.10A–3.

[8] *See* Securities Exchange Act Release Nos. 48832 (November 25, 2003), 68 FR 67715 (December 3, 2003)(SR–CSE–2003–06) and 48738 (October 31, 2003), 68 FR 63166 (November 7, 2003)(SR–CSE–2003–11).

[9] *See* Securities Exchange Act Release No. 48745 (November 4, 2003), 68 FR 64154 (November 12, 2003) (approving changes to the corporate governance listing standards of the Nasdaq Stock Market, Inc. and the NYSE).

[10] *See infra* Section II.A.1.*l*.

substantially similar governance-related requirements.[11]

Summarized below are significant provisions of the proposal.

a. Independence of Majority of Board Members

Proposed Rule 13.6(d)(1)[12] of the Exchange Rules would require the board of directors of each listed company to consist of a majority of independent directors, whose names would be required to be disclosed.[13] Pursuant to proposed Exchange Rule 13.6(d)(2), no director would qualify as ''independent'' unless the board affirmatively determines that the director has no material relationship with the company (either directly or as a partner, shareholder or officer of an organization that has a relationship with the company). The company would be required to disclose in its annual proxy statement or, if the company does not file an annual proxy statement, in the company's annual report on Form 10–K filed with the Commission, the directors who have been determined to be independent and the basis of such determination.[14] In complying with this requirement, a board would be permitted to adopt and disclose standards to assist it in making determinations of independence, disclose those standards, and then make the general statement that the independent directors meet those standards.[15]

b. Definition of Independent Director

In addition, NSX proposes a definition of independent director that would require the following: First, a director who is an employee, or whose immediate family member is an executive officer, of the company would not be independent until three years after the end of such employment relationship.[16] Employment as an interim Chairman or CEO would not disqualify a director from being considered independent following that employment.[17] Second, a director who receives, or whose immediate family member receives, more than $100,000 per year in direct compensation from the listed company, except for certain permitted payments,[18] would not be independent until three years after he or she ceases to receive more than $100,000 per year in such compensation.

Third, a director who is affiliated with or employed by, or whose immediate family member is affiliated with or employed in a professional capacity by, a present or former internal or external auditor of the company would not be independent until three years after the end of the affiliation or the employment or auditing relationship.[19]

Fourth, a director who is employed, or whose immediate family member is employed, as an executive officer of another company where any of the company's present executives serve on that company's compensation committee would not be independent until three years after the end of such service or the employment relationship.[20]

Fifth, a director who is an executive officer or an employee, or whose immediate family member is an executive officer, of a company that makes payments to, or receives payments from, the listed company for property or services in an amount which, in any single fiscal year, exceeds the greater of (a) $200,000, (b) 5% of such other company's consolidated gross revenues, or (c), for companies whose securities are listed on NSX and NYSE, the amount permitted under NYSE rules, would not be independent until three years after falling below such threshold (''Business Relationship Provision'').[21] NSX proposes to clarify this proposal with respect to charitable organizations by adding a provision noting that charitable organizations would not be considered ''companies'' for purposes of the Business Relationship Provision, provided that the listed company discloses in its annual proxy statement, or if the listed company does not file an annual proxy statement, in its annual report on Form 10–K filed with the Commission, any charitable contributions made by the listed company to any charitable organization in which a director serves as an executive officer if, within the preceding three years, such contributions in any single year exceeded the greater of $200,000 or 5% of the organization's consolidated gross revenues, or, for companies whose securities are also listed on the NYSE, the amount permitted under NYSE rules.[22]

NSX also proposes to add a provision explaining that both the payments and the consolidated gross revenues to be measured for the Business Relationship Provision would be those reported in the last completed fiscal year, and that the look-back provisions would apply solely to the financial relationship between the listed company and the director or immediate family member's current employer. A listed company would not need to consider former employment of the director or immediate family member.[23]

NSX proposes to define ''immediate family member'' to include person's spouse, parents, children, siblings, mothers- and fathers-in-law, daughters- and sons-in-law, sisters- and brothers-in-law, and anyone (other than domestic employees) who shares such person's home.[24] NSX also proposes that references to ''company'' include any

[11] *See* NSX Rule 13.6(a)(3). Specifically, such company listing on another market would not be required to separately meet the NSX governance requirements, except certain requirements relating to audit committees. The NSX has represented that it will have surveillance procedures sufficient to allow the Exchange to confirm that an issuer relying on this provision is in compliance with the requirements of the other market.

[12] Existing Exchange Rule 13.6 would be re-numbered to Rule 13.7 and existing Exchange Rule 13.7 would be moved to paragraph (a)(1)(c) of proposed Exchange Rule 13.6.

[13] *See* NSX Rule 13.6(d)(1). *See infra* Section II.A.1.l. concerning entities that would be exempt from this requirement.

[14] NSX proposes that for all provisions of Proposed Exchange Rule 13.6 that call for disclosure in a company's Form 10–K, if a company subject to such a provision is not a company required to file a Form 10–K, then the provision would be interpreted to mean the annual periodic disclosure form that the company files with the Commission.

[15] *See* Proposed Exchange Rule 13.6(d)(2)(a).

[16] *See* Proposed Exchange Rule 13.6(d)(2)(b)(i).

[17] *See* Interpretations and Policies to Proposed Exchange Rule 13.6(d)(2)(b)(i).

[18] Permitted payments would include director and committee fees and pension or other forms of deferred compensation for prior service, provided such compensation is not contingent in any way on continued service. *See* Proposed Exchange Rule 13.6(d)(2)(b)(ii). In addition, compensation received by a director for former service as an interim Chairman or CEO would not be required to be considered. *See* Interpretations and Policies to Proposed Exchange Rule 13.6(d)(2)(b)(ii). Compensation received by an immediate family member for service as a non-executive employee of the listed company would also not be required to be considered. *Id.*

[19] *See* Proposed Exchange Rule 13.6(d)(2)(b)(iii).

[20] *See* Proposed Exchange Rule 13.6(d)(2)(b)(iv).

[21] *See* Proposed Exchange Rule 13.6(d)(2)(b)(v). The NYSE Business Relationship Provision currently provides that a director that is an executive officer or an employee, or whose immediate family member is an executive officer, of a company that makes payments to, or receives payments from, the listed company for property or services in an amount which, in any single fiscal year, exceed the greater of $1 million, or 2% of such other company's consolidated gross revenues, would not be independent until three years after falling below such threshold. *See* NYSE section 303A(b)(2)(v). *See also* Securities Exchange Act Release No. 48745, *supra* note , 68 FR at 64157.

[22] *See* Interpretations and Policies to Proposed Exchange Rule 13.6(d)(2)(b)(v).

[23] *Id.*

[24] *See* General Interpretations and Policies to Proposed Exchange Rule 13.6(d)(2)(b). NSX proposes that when applying the look-back provisions in Rule 13.6(d)(2)(b), listed companies would not need to consider individuals who are no longer immediate family members as a result of legal separation or divorce, or those who have died or become incapacitated. *Id.*

parent or subsidiary in a consolidated group with the company.[25]

NSX further proposes to apply a one-year look-back for the first year after adoption of these new standards.[26] The three-year look back would begin to apply from the date that is the first anniversary of Commission approval of the proposed rule change.[27]

c. Separate Meetings for Board Members

NSX proposes to require the non-management directors of each NSX-listed company to meet at regularly scheduled executive sessions without management.[28] In addition, NSX proposes to require listed companies to disclose a method for interested parties to communicate directly with the presiding director of such executive sessions, or with the non-management directors as a group.[29] Companies may use the same procedures they have established to comply with Rule 10A–3(b)(3) of the Act.[30]

d. Nominating/Corporate Governance Committee

NSX proposes to require each listed company to have a nominating/corporate governance committee composed entirely of independent directors.[31] NSX also proposes such committee to have a written charter that addresses, among other items, the committee's purpose and responsibilities, and an annual performance evaluation of the nominating/corporate governance committee.[32] NSX further proposes to clarify that the committee would be required to identify individuals qualified to become board members, consistent with the criteria approved by the board.[33]

e. Compensation Committee

NSX proposes to require each listed company to have a compensation committee composed entirely of independent directors.[34] NSX also proposes to require the compensation committee to have a written charter that addresses, among other items, the committee's purpose and responsibilities, and an annual performance evaluation of the compensation committee.[35] The compensation committee also would be required to produce a compensation committee report on executive compensation, as required by Commission rules to be included in the company's annual proxy statement or annual report on Form 10–K filed with the Commission.[36] Further, NSX proposes to (1) provide that either as a committee or together with the other independent directors (as directed by the board), the committee would determine and approve the CEO's compensation level based on the committee's evaluation of the CEO's performance;[37] and (2) provide that discussion of CEO compensation with the board generally is not precluded.[38]

f. Audit Committee

i. Composition

Article IV, Subsection 1.4 of the Exchange By-Laws sets forth provisions on audit committee requirements for listed companies. Currently, Subsection 1.4 requires each NSX-listed company to have a minimum three-person audit committee composed entirely of directors that meet the independence standards of Rule 10A–3.[39] Subsection 1.4 also requires that each member of the audit committee be financially literate and that at least one member have accounting or related financial management expertise.[40] With respect to independence, proposed Exchange Rule 13.6(d)(7) would also require the members of the audit committee of each NSX-listed company to meet the independence standards set out in proposed paragraph (d)(2) of the Rule.[41] With respect to accounting or related financial management expertise, proposed Exchange Rule 13.6(d)(7) would clarify that while the Exchange does not require that a listed company's audit committee include a person who satisfies the definition of audit committee financial expert set forth in Item 401(h) of Regulation S–K, a board may presume that such a person has accounting or related financial management experience.[42]

If an audit committee member simultaneously serves on the audit committee of more than three public companies, and the listed company does not limit the number of audit committees on which its audit committee members serve, each board would be required to determine that such simultaneous service would not impair the ability of such member to effectively serve on the listed company's audit committee and to disclose such determination.[43]

ii. Audit Committee Charter and Responsibilities

Exchange Rule 13.6(d)(7)(c) would expand on the provisions of Subsection 1.4(a)(2) of Article IV of the Exchange By-Laws and require the audit committee of each listed company to have a written charter that addresses: (i) The committee's purpose; (ii) an annual performance evaluation of the audit committee; and (iii) the duties and responsibilities of the audit committee (the ''Audit Committee Charter Provision''). The Audit Committee Charter Provision provides details as to the duties and responsibilities of the audit committee that would be required to be addressed. These would include, at a minimum, those set out in Rule 10A–3(b)(2), (3), (4) and (5),[44] as well as the responsibility to annual obtain and review a report by the independent auditor; discuss the company's annual audited financial statement and quarterly financial statements with management and the independent auditor; discuss the company's earnings press releases, as well as financial information and earnings guidance provided to analysts and rating agencies; discuss policies with respect to risk assessment and risk management; meet separately, periodically, with management, with internal auditors (or other personnel responsible for the internal audit function), and with independent auditors; review with the independent auditors any audit problems or difficulties and management's response; set clear hiring policies for employees or former

[25] *See* General Interpretations and Policies to Proposed Exchange Rule 13.6(d)(2)(b).

[26] *See* Transition Rule to Proposed Exchange Rule 13.6(d)(2)(b).

[27] *Id.*

[28] *See* Proposed Exchange Rule 13.6(d)(3).

[29] *See* Interpretations and Policies to Proposed Exchange Rule 13.6(d)(3).

[30] *Id. See also infra* Section II.A.1.*l* concerning entities that would be exempt from these requirements.

[31] *See* Proposed Exchange Rule 13.6(d)(4)(a). *See infra* Section II.A.1.*l.* concerning controlled companies and other entities that would be exempt from this requirement.

[32] *See* Proposed Exchange Rule 13.6(d)(4)(b).

[33] *Id.*

[34] *See* Proposed Exchange Rule 13.6(d)(5)(a). *See infra* Section II.A.1.*l.* concerning controlled companies and other entities that would be exempt from this requirement.

[35] *Id.*

[36] *See* Proposed Exchange Rule 13.6(d)(5)(b)(i)(C).

[37] *See* Proposed Exchange Rule 13.6(d)(5)(a).

[38] *See* Interpretations and Policies to Proposed Exchange Rule 13.6(d)(5).

[39] *See* Article IV, Subsection 1.4(a) of the Exchange By-Laws.

[40] *See* Article IV, Subsection 1.4(a)(1) of the Exchange By-Laws.

[41] *See* Proposed Exchange Rule 13.6(d)(7)(b). *See also infra* Section II.A.1.*l* concerning the applicability of certain of this requirement.

[42] *See* Interpretations and Policies to Proposed Exchange Rule 13.6(d)(7)(a).

[43] *Id.*

[44] *See* Proposed Exchange Rule 13.6(d)(7)(c).

employees of the independent auditors; and report regularly to the board.[45]

g. Internal Audit Functions

Exchange Rule 13.6(d)(7)(d) would require each listed company to have an internal audit function.[46]

h. Corporate Governance Guidelines

Exchange Rule 13.6(d)(9) would require each listed company to adopt and disclose corporate governance guidelines.[47] The following topics would be required to be addressed: Director qualification standards; director responsibilities; director access to management and, as necessary and appropriate, independent advisors; director compensation; director orientation and continuing education; management succession; and annul performance evaluation of the board.[48] Each company's website would be required to include its corporate governance guidelines and the charters of its most important committees, and the availability of this information on the website or in print to shareholders would need to be referenced in the company's annual report on Form 10–K filed with the Commission.[49]

i. Code of Business Conduct and Ethics

Exchange Rule 13.6(d)(10) would require each listed company to adopt and disclose a code of business conduct and ethics for directors, officers, and employees, and to promptly disclose any waivers of the code for directors or executive officers.[50] The interpretations and policies to this provision would set forth the most important topics that should be addressed, including conflicts of interest; corporate opportunities; confidentiality of information; fair dealing; protection and proper use of company assets; compliance with laws, rules, and regulations (including insider trading laws); and encouraging the reporting of any illegal or unethical behavior. Each code would be required to contain compliance standards and procedures to facilitate the effective operation of the code. Each listed company's website would be required to include its code of business conduct and ethics, and the availability of the code on the website or in print to shareholders would need to be referenced in the company's annual report on Form 10–K filed with the Commission.[51]

j. CEO Certification

Exchange Rule 13.6(d)(12)(a) would require the CEO of each listed company to certify to NSX each year that he or she is not aware of any violation by the company of NSX's corporate governance listing standards.[52] This certification would be required to be disclosed in the company's annual report or, if the company does not prepare an annual report to shareholders, in the company's annual report on Form 10–K filed with the Commission.

In addition, Exchange Rule 13.6(d)(12)(b) would require the CEO of each listed company to promptly notify the Exchange in writing after any executive officer of the listed company becomes aware of any material non-compliance with any applicable provisions of the new requirements.

k. Public Reprimand

Exchange Rule 13.6(d)(13) would allow NSX to issue a public reprimand letter to any listed company that violates an NSX listing standard.[53]

l. Exceptions to Corporate Governance Proposals

NSX proposes to exempt any listed company of which more than 50% of the voting power is held by an individual, a group or other company (''controlled company'') from the requirements that its board have a majority of independent directors, and that the company have nominating/corporate governance and compensation committees composed entirely of independent directors. A company that chose to take advantage of any or all of these exemptions would be required to disclose the choice, that it is a controlled company, and the basis for the determination in its annual proxy statement or, if the company does not file an annual proxy statement, in the company's annual report on Form 10–K filed with the Commission.[54] Limited partnerships and companies in bankruptcy proceedings also would be exempt from the requirements that the board have a majority of independent directors and that the issuer have nominating/corporate governance and compensation committees composed entirely of independent directors.[55]

NSX considers many of the requirements of proposed Exchange Rule 13.6 to be unnecessary for closed-end and open-end management investment companies that are registered under the Investment Company Act of 1940 (''Investment Company Act'')[56], given the pervasive federal regulation applicable to them. However, NSX proposes that registered closed-end management investment companies (''closed-end funds'') would be required to: (1) Have a minimum three-member audit committee that satisfies the requirements of Rule 10A–3 and meets additional composition requirements of proposed Rule 13.6(d)(7)(a) and the requirements of Subsection 1.4 of Article IV of the Exchange By-Laws; (2) comply with the requirements of the Audit Committee Charter Provision; and (3) comply with the certification and notification provisions regarding non-compliance.[57] Closed-end funds would be excluded from the disclosure requirement related to an audit committee member's simultaneous service on more than three audit committees, but would be subject to the requirement for the board to determine that such simultaneous service would not impair the ability of such member to effectively serve on the listed company's audit committee.[58]

NSX also proposes to require business development companies, which are a type of closed-end management investment company defined in Section 2(a)(48) of the Investment Company Act[59] that are not registered under that act, to comply with all of the provisions of Exchange Rule 13.6 applicable to domestic issuers, except that the directors of such companies, including audit committee members, would not be required to satisfy the independence requirements set forth in proposed Exchange Rule 13.6(d)(2) and (d)(7)(b).[60] For purposes of proposed Exchange Rule 13.6(d)(1), (3), (4), (5), and (9), a director of a business development company would be considered to be independent if he or she is not an ''interested person'' of the company, as defined in section 2(a)(19) of the Investment Company Act.[61]

Open-end management investment companies (''open-end funds''), which can be listed as Investment Company

[45] *See* Proposed Exchange Rule 13.6(d)(7)(c)(iii). *See also infra* Section II.A.1.*l* concerning the applicability of these requirements.

[46] *See infra* Section II.A.1.*l* concerning the applicability of this requirement.

[47] *See id.*

[48] *See* Interpretations and Policies to Proposed Exchange Rule 13.6(d)(9).

[49] *Id.*

[50] *See also infra* Section II.A.1.*l* concerning applicability of this requirement.

[51] *See* Interpretations and Policies to Proposed Exchange Rule 13.6(d)(10).

[52] *See also infra* Section II.A.1.*l* concerning the applicability of these requirements.

[53] This lesser sanction is not intended for use in the case of companies that fail to comply with the requirements of Rule 10A–3. *See* Interpretations and Policies to Proposed Exchange Rule 13.6(d)(13).

[54] *See* Proposed Exchange Rule 13.6(a)(1)(a).

[55] *See* Proposed Exchange Rule 13.6(a)(1)(b).

[56] 15 U.S.C. 80a–1 *et seq.*

[57] *See* Proposed Exchange Rule 13.6(a)(1)(c).

[58] *Id.*

[59] 15 U.S.C. 80a–2(a)(48).

[60] *See* Proposed Exchange Rule 13.6(a)(1)(c).

[61] 15 U.S.C. 80a–2(a)(19).

Units, and are more commonly known as Exchange Traded Funds or ETFs, would be required to: (1) Have an audit committee that satisfies the requirements of Rule 10A–3 and Subsection 1.4 of Article IV of the Exchange By-Laws, and (2) notify the Exchange in writing of any material non-compliance.[62]

In addition, NSX proposes also to require the audit committees of closed-end and open-end funds to establish procedures for the confidential, anonymous submission of concerns regarding questionable accounting or auditing matters by employees of the investment advisor, administrator, principal underwriter, or any other provider of accounting related services for the investment company, as well as employees of the investment company.[63] This responsibility would be required to be addressed in the audit committee charter.[64]

NSX proposes that, except as otherwise required by Rule 10A–3, the new requirements would also not apply to passive business organizations in the form of trusts (such as royalty trusts) or to derivatives and special purpose securities. To the extent that Rule 10A–3 applies to a passive business organization, listed derivative, or special purpose security, the requirement to have an audit committee that satisfies the requirements of Rule 10A–3, and the requirements to notify NSX in writing of any material non-compliance, also would apply.[65]

The new requirements generally would not apply to companies listing only preferred or debt securities on NSX. To the extent required to Rule 10A–3, however, all companies listing only preferred or debt securities on NSX would be required to: (1) Have an audit committee that satisfies the requirements of Rule 10A–3, and (2) notify the Exchange in writing of any material non-compliance.[66]

Because the majority of the Exchange's issuers have securities that are also listed on one or more other markets, the Exchange has included a provision in its proposed rule amendments that would exempt such issuers from certain of NSX's governance standards if the issuer is listed on a national securities exchange or national securities association with listing standards substantially similar to the NSX governance standards. Specifically, such company listing on another market would not be required to separately meet the NSX governance requirements.[67] The proposed rule text contains specific criteria that would be required to be considered when determining whether another market's governance standards are ''substantially similar.''

m. Applications to Foreign Private Issuers

Exchange Rule 13.6 would permit NSX-listed companies that are foreign private issuers, such as that term is defined in Rule 3b–4 of the Act,[68] to follow home country practice in lieu of the new requirements, except that such companies would be required to: (1) Have an audit committee that satisfies the requirements of Rule 10A–3; (2) notify NSX in writing after any executive officer becomes aware of any non-compliance with any applicable provision; and (3) provide a brief, general summary of the significant ways in which its governance practices differ from those followed by domestic companies under NSX listing standards.[69] Listed foreign private issuers would be permitted to provide this disclosure either on their website (provided it is in the English language and accessible from the United States) and/or in their annual report as distributed to shareholders in the United States.[70] If the disclosure is made available only on the website, the annual report would be required to state this and provide the web address at which the information may be obtained.[71]

n. Proposed Implementation of New Provisions

Pursuant to the proposed schedule, listed companies would have until the earlier of their first annual meeting after July 31, 2004, or December 31, 2004 to comply with the new standards. However, if a company with a classified board is required to change a director who would not normally stand for election in an annual meeting, the company would be permitted to continue such director in office until the second annual meeting after such date, but no later than December 31, 2005. Nothwithstanding the foregoing, foreign private issuers would have until July 31, 2005 to comply with any Rule 10A–3 audit committee requirements.[72]

Companies listing in conjunction with their initial public offering[73] would be required to have one independent member at the time of listing, a majority of independent members within 90 days of listing, and fully independent committees within one year. They would be required to meet the majority of independent board requirement within 12 months of listing.[74]

Companies listing upon transfer from another market, or that are listing a security on the Exchange that will remain listed on another market or markets, would have 12 months from the date of transfer in which to comply with any requirement to the extent that the market on which they had/have been listed does not have the same requirement. To the extent that the other market has a substantially similar requirement but also had a transition period from the effective date of that market's rule, which period had not yet expired, the company would have the same transition period as would have been available to it on the other market. This transition period for companies transferring from other markets or that are dually or multiply listing securities would not apply to the audit committee requirements of Rule 10A–3 unless a transition period is available under Rule 10A–3.[75]

2. Statutory Basis

The Exchange believes that the proposed rule change, as amended, is consistent with Section 6 of the Act[76] in general and furthers the objectives of Section 6(b)(5)[77] in particular in that it

[62] *See* Proposed Exchange Rule 13.6(a)(1)(c).

[63] *Id.*

[64] *Id.*

[65] *See* Proposed Exchange Rule 13.6(a)(1)(d).

[66] *See* Proposed Exchange Rule 13.6(a)(2).

[67] The exemption would not apply to the Exchange's requirements relating to audit committees or to an issuer's obligation to notify the Exhcnage if there is material non-compliance with the audit committee requirements. *See* Proposed Exchange Rule 13.6(a)(3). *See also supra* note 11.

[68] 17 CFR 240.3b–4.

[69] *See* Proposed Exchange Rule 13.6(a)(1)(e) and (d)(11).

[70] *See* Interpretations and Policies to Proposed Exchange Rule 13.6(d)(11).

[71] *Id.*

[72] *See* Proposed Exchange Rule 13.6(b).

[74] *Id.*

[73] For purposes of proposed Exchange Rule 13.6, a company would be considered to be listing in conjunction with an initial public offering if, immediately prior to listing, it does not have a class of common stock registered under the Act. NSX also proposes to permit companies that are emerging from bankruptcy or have ceased to be controlled companies within the meaning of proposed Exchange Rule 13.6 to phase in independent nomination and compensation committees and majority independent boards on the same schedule as companies listing in conjunction with an initial public offering. However, for purposes of the requirement that a company have an audit committee that complies with the requirements of Rule 10A–3, and the requirement that a company notify the Exchange in writing of any material non-compliance, a company will be considered to be listing in conjunction with an initial public offering only if it meets the conditions of Rule 10A–3(b)(1)(iv)(A). Investment companies are not subject to this exemption under Rule 10A–3(b)(1)(iv)(A), however. *See* Proposed Exchange Rule 13.6(b).

[75] *Id.*

[76] 15 U.S.C. 78f(b).

[77] 15 U.S.C. 78f(b)(5).

is designed to prevent fraudulent and manipulative acts and practices, to promote just and equitable principles of trade and to remove impediments to and perfect the mechanism of a free and open market and a national market system and, generally, in that it protects investors and the public interest.

B. Self-Regulatory Organization's Statement on Burden on Competition

The Exchange does not beleive that the proposed rule change will impose any inappropriate burden on competition.

C. Self-Regulatory Organization's Statement on Comments on the Proposed Rule Change Received From Members, Participants or Others

No written comments were solicited or received in connection with the proposed rule change.

III. Solicitation of Comments

Interested persons are invited to submit written data, views, and arguments concerning the foregoing, including whether the proposed rule change is consistent with the Act. Comments may be submitted by any of the following methods:

Electronic Comments

- Use the Commission's Internet comment form (*http://www.sec.gov/rules/sro.shtml*); or
- Send an e-mail to *rule-comments@sec.gov*. Please include File Number SR–NSX–2004–10 on the subject line.

Paper Comments

- Send paper comments in triplicate to Jonathan G. Katz, Secretary, Securities and Exchange Commission, 450 Fifth Street, NW., Washington, DC 20549–0609.

All submissions should refer to File Number SR–NSX–2004–10. This file number should be included on the subject line if e-mail is used. To help the Commission process and review your comments more efficiently, please use only one method. The Commission will post all comments on the Commission's Internet Web site (*http://www.sec.gov/rules/sro.shtml*). Copies of the submission, all subsequent amendments, all written statements with respect to the proposed rule change that are filed with the Commission, and all written communications relating to the proposed rule change between the Commission and any person, other than those that may be withheld from the public in accordance with the provisions of 5 U.S.C. 552, will be available for inspection and copying in the Commission's Public Reference Section, 450 Fifth Street, NW., Washington, DC 20549. Copies of such filing also will be available for inspection and copying at the principal office of the NSX. All comments received will be posted without change; the Commission does not edit personal identifying information from submissions. You should submit only information that you wish to make available publicly. All submissions should refer to File Number SR–NSX–2004–10 and should be submitted on or before August 6, 2004.

IV. Commission's Findings and Order Granting Accelerated Approval of Proposed Rule Change

After careful review, the Commission finds that the proposed rule change is consistent with the requirements of the Act and the rules and regulations thereunder applicable to a national securities exchange.[78] In particular, the Commission finds that the proposed rule change, as amended, is consistent with section 6(b)(5) of the Act[79] in that it is designed, among other things, to facilitate transactions in securities, to prevent fraudulent and manipulative acts and practices, to promote just and equitable principles of trade, to remove impediments to and perfect the mechanism of a free and open market and a national market system, and, in general, to protect investors and the public interest, and does not permit unfair discrimination among issuers.

In the Commission's view, the proposed rule change will foster greater transparency, accountability, and objectivity in the oversight by, and decision-making processes of, the boards and key committees of NSX-listed issuers. The proposal also will promote compliance with high standards of conduct by the issuers' directors and management. The Commission notes that the NSX's proposal is similar to proposals of other self-regulatory organizations (''SROs'') recently approved by the Commission.[80]

The NSX has requested that the Commission grant accelerated approval to the proposed rule change. The Commission believes that the proposed rule change will significantly align the corporate governance standards proposed for companies listed on the NSX with the standards approved by the Commission for companies listed on other SROs. The Commission believes it is appropriate to accelerate approval of the proposed rule change so that the comprehensive set of strengthened corporate governance standards for companies listed on the NSX may be implemented on generally the same timetable (with some modification of certain deadlines) as that for similar standards adopted for issuers listed on other SROs. The Commission therefore finds good cause, consistent with Section 19(b)(2) of the Act,[81] to approve the proposed rule change prior to the thirtieth day after the date of publication of notice of filing thereof in the **Federal Register.**

V. Conclusion

It is therefore ordered, pursuant to section 19(b)(2) of the Act,[82] that the proposed rule change (SR–NSX–2004–10), as amended, is hereby approved on an accelerated basis.

For the Commission, by the Division of Market Regulation, pursuant to delegated authority.[83]

Margaret H. McFarland,

Deputy Secretary.

[FR Doc. 04–16180 Filed 7–15–04; 8:45 am]

BILLING CODE 8010–01–P

[78] 15 U.S.C. 78f(b). In approving this proposal, the Commission has considered the proposed rule's impact on efficiency, competition and capital formation. 15 U.S.C. 78c(f).

[79] 15 U.S.C. 78f(b)(5).

[80] *See e.g.,* Securities Exchange Act Release No. 48745 (November 4, 2003), 68 FR 64154 (November 12, 2003) (approving changes to the corporate governance listing standards of the Nasdaq Stock Market, Inc. and the NYSE).

[81] 15 U.S.C. 78s(b)(2).

[82] 15 U.S.C. 78s(b)(2).

[83] 17 CFR 200.30–3(a)(12).

DEPARTMENT OF TRANSPORTATION

Office of the Secretary

Notice of Meeting

AGENCY: Office of the Secretary (OST), DOT.

ACTION: Notice of meeting.

SUMMARY: The U.S. Department of Transportation (DOT) announces a meeting of the Transportation Labor-Management Board (Board). Notice of the meeting is required under the Federal Advisory Committee Act.

TIME AND PLACE: The Board will meet on Wednesday, July 28, 2004, at 10:30 a.m., at the U.S. Department of Transportation, Nassif Building, room 3200–3202, 400 Seventh Street, SW., Washington, DC 20590. The room is located on the 3rd floor.

TYPE OF MEETING: The meeting is open to the public. Please note that visitors without a government identification badge should enter the Nassif Building at the Southwest lobby, for clearance at

the Visitor's Desk. Seating will be available on a first-come, first-served basis. Handicapped individuals wishing to attend should contact DOT to obtain appropriate accommodations.

POINT OF CONTACT: Stephen Gomez, Executive Secretary,Transportation Labor-Management Board, U.S. Department of Transportation, Nassif Building, 400 Seventh Street, SW., room 7411, Washington, DC 20590, (202) 366–9455 or 4088.

SUPPLEMENTARY INFORMATION: The Board will discuss the disposition of the DOT Labor Relations Climate Survey.

PUBLIC PARTICIPATION: We invite interested persons and organizations to submit comments. Mail or deliver your comments or recommendations to Stephen Gomez at the address shown above. Comments should be received by July 23, 2004, in order to be considered at the July 28th meeting.

Issued in Washington, DC, on July 8, 2004.
For the U.S. Department of Transportation.

Linda Moody,

Associate Director, Workforce Environment and Pay Division.

[FR Doc. 04–16100 Filed 7–15–04; 8:45 am]

BILLING CODE 4910–62–P

DEPARTMENT OF TRANSPORTATION

Federal Aviation Administration

CFR PART 150

Toledo Express Airport, Toledo, OH

AGENCY: Federal Aviation Administration, DOT

ACTION: Notice.

SUMMARY: The Federal Aviation Administration (FAA) announces its findings on the proposed amendment to the noise compatibility program submitted by the Toledo-Lucas County Port Authority for the Toledo Express Airport under the provisions of 49 U.S.C. (the Aviation Safety and Noise Abatement Act, hereinafter referred to as ''the Act'') and 14 CFR Part 150. These findings are made in recognition of the description of Federal and nonfederal responsibilities in Senate Report No. 96–52 (1980). On January 24, 2003 the FAA determined that the noise exposure maps submitted by the Toledo-Lucas County Port Authority under part 150 were in compliance with applicable requirements. On July 1, 2004, the FAA approved the Toledo Express Airport amendment to the noise compatibility program. All of the recommendations of the program were approved. No program elements relating to new or revised flight procedures for noise abatement were proposed by the airport operator.

DATES: The effective date of the FAA's approval of the Toledo Express Airport noise compatibility program is July 1, 2004.

FOR FURTHER INFORMATION CONTACT: Ms. Katherin S. Jones, Community Planner, Detroit Airport District Office, 11677 S. Wayne Road, Ste. 107, Romulus, MI 48174. (734) 229–2958. Documents reflecting this FAA action may be reviewed at this same location.

SUPPLEMENTARY INFORMATION: This notice announces that the FAA has given its overall approval to the noise compatibility program for Toledo Express Airport, effective July 1, 2004.

Under section 47504 of the Act, an airport operator who has previously submitted a noise exposure map may submit to the FAA a noise compatibility program which sets forth the measures taken or proposed by the airport operator for the reduction of existing non-compatible land uses and prevention of additional non-compatible land uses within the area covered by the noise exposure maps. The Act requires such programs to be developed in consultation with interested and affected parties including local communities, government agencies, airport users, and FAA personnel.

Each airport noise compatibility program developed in accordance with Federal Aviation Regulations (FAR) Part 150 is a local program, not a Federal program. The FAA does not substitute its judgment for that of the airport proprietor with respect to which measures should be recommended for action. The FAA's approval or disapproval of FAR Part 150 program recommendations is measured according to the standards expressed in Part 150 and the Act and is limited to the following determinations:

a. The noise compatibility program was developed in accordance with the provisions and procedures of FAR Part 150;

b. Program measures are reasonably consistent with achieving the goals of reducing existing non-compatible and users around the airport and preventing the introduction of additional non-compatible land uses;

c. Program measures would not create an undue burden on interstate or foreign commerce, unjustly discriminate against types or classes of aeronautical uses, violate the terms of airport grant agreements, or intrude into ares preempted by the Federal Government; and

d. Program measures relating to the use of flight procedures can be implemented within the period covered by the program without derogating safety, adversely affecting the efficient use and management of the navigable airspace and air traffic control systems, or adversely affecting other powers and responsibilities of the Administrator prescribed by law.

Specific limitations with respect to FAA's approval of an airport noise compatibility program are delineated in FAR Part 150, § 150.5. Approval is not a determination concerning the acceptability of land uses under Federal, state, or local law. Approval does not by itself constitute an FAA implementing action. A request for Federal action or approval to implement specific noise compatibility measures may be required, and an FAA decision on the request may require an environmental assessment of the proposed action. Approval does not constitute a commitment by the FAA to financially assist in the implementation of the program nor a determination that all measurers covered by the program are eligible for grant-in-aid funding from the FAA. Where federal funding is sought, requests for projects grants must be submitted to the FAA Airports District Office in Romulus, MI.

Toledo-Lucas County Port Authority submitted to the FAA on January 21, 2003 the noise exposure maps, descriptions, and other documentation produced during the noise compatibility planning study conducted from 1999 through 2004. The Toledo Express Airport noise exposure maps were determined by FAA to be in compliance with applicable requirements on January 24, 2003. Notice of this determination was published in the **Federal Register** on February 14, 2003, FR Doc. 03–3600).

The Toledo Express Airport study contains a proposed amendment to the noise compatibility program comprised of actions designed for phased implementation by airport management and adjacent jurisdictions from 2004 to the year 2007. It was requested that the FAA evaluate and approve this material as a noise compatibility program as described in section 47504 of the Act. The FAA began its review of the program on January 14, 2004 and was required by a provision of the Act to approve or disapprove the program within 180 days (other than the use of new or modified flight procedures for noise control). Failure to approve or disapprove such program within the 180-day period shall be deemed to be an approval of such program.

The submitted program contained one proposed action for noise mitigation on and/or off the airport, as applicable). The FAA completed its review and determined that the procedural and substantive requirements of the Act and

FAR Part 150 have been satisfied. The overall program, therefore, was approved by the FAA effective July 1, 2004.

Outright approval was granted for all of the specific program elements. The approved measure was to Acquire the Swanton Township School.

These determinations are set forth in detail in a Record of Approval signed by the Associate Administrator for Airports on July 1, 2004. The Record of Approval, as well as other evaluation materials and the documents comprising the submittal, are available for review at the FAA office listed above and at the administrative offices of the Toledo-Lucas County Port Authority. The Record of Approval also will be available on-line at *http://www.faa.gov/arp/environmental/14cfr150/index14.cfm.*

Issued in Romulas, MI, July 2, 2004.

Irene R. Porter,

Manager, Detroit Airport District Office.

[FR Doc. 04–16105 Filed 7–15–04; 8:45 am]

BILLING CODE 4910–13–M

DEPARTMENT OF TRANSPORTATION

Federal Aviation Administration

RTCA Special Committee 201: Aeronautical Operational Control (AOC) Message Hazard Mitigation (AMHM)

AGENCY: Federal Aviation Administration (FAA), DOT.

ACTION: Notice of RTCA Special Committee 201 meeting.

SUMMARY: The FAA is issuing this notice to advise the public of a meeting of RTCA Special Committee 201: Aeronautical Operational Control (AOC) Message Hazard Mitigation (AMHM).

DATES: The meeting will be held on August 3–5, 2004, beginning at 9 a.m.

ADDRESSES: The meeting will be held at Boeing, Building 40–82, Meet at 40–86 Building, Everett, Washington.

FOR FURTHER INFORMATION CONTACT: (1) RTCA Secretariat, 1828 L. Street, NW., Suite 805, Washington, DC 20036–5133; telephone (202) 833–9339; fax (202) 833–9434; Web site *http://www.rtca.org.*

SUPPLEMENTARY INFORMATION: Pursuant to section 10(a)(2) of the Federal Advisory Committee Act (Pub. L. 92–463, 5 U.S.C., appendix 2), notice is hereby given for a Special Committee 201 meeting. The agenda will include:

- August 3:
  - Opening Session (Welcome, Introductory and Administrative Remarks, Review Agenda, Background)
  - Review of phonecon discussions and conclusions
  - Review/Resolve FRAC comments
  - Vote to recommend draft be forwarded to PMC for adoption
  - Closing Session (Other Business, Date and Place of Next Meeting, Closing Remarks, Adjourn)

Note: This agenda will be followed as appropriate over the course of 3 days.

Attendance is open to the interested public but limited to space availability. With the approval of the chairmen, members of the public may present oral statements at the meeting. Persons wishing to present statements or obtain information should contact the person listed in the **FOR FURTHER INFORMATION CONTACT** section. Members of the public may present a written statement to the committee at any time.

Issued in Washington, DC, on June 23, 2004.

Robert Zoldos,

FAA System Engineer, RTCA Advisory Committee.

[FR Doc. 04–16107 Filed 7–15–04; 8:45 am]

BILLING CODE 4910–13–M

DEPARTMENT OF TRANSPORTATION

Federal Aviation Administration

Change Notice for RTCA Program Management Committee

AGENCY: Federal Aviation Administration (FAA), DOT.

ACTION: Notice of RTCA Program Management Committee meeting.

SUMMARY: The FAA is issuing this notice to advise the public of a meeting of the RTCA Program Management Committee.

DATES: The meeting will be held July 29, 2004 starting at 9 a.m.

ADDRESSES: The meeting will be held at RTCA, Inc., 1828 L Street, NW., Suite 805, Washington, DC, 20036.

FOR FURTHER INFORMATION CONTACT: RTCA Secretariat, 1828 L Street, NW., Suite 850, Washington, DC, 20036; telephone (202) 833–9339; fax (202) 833–9434; Web site *http://www.rtca.org.*

SUPPLEMENTARY INFORMATION: Pursuant to section 10(a)(2) of the Federal Advisory Committee Act (Pub. L. 92–463, 5 U.S.C., Appendix 2), notice is hereby given for a Program Management Committee meeting. The revised agenda will include:

- July 29:
- Open Session (Welcome and Introductory Remarks, Review/Approve Summary of Previous Meeting)
- Publication Consideration/Approval:
- Final Draft, Interchange Standards for Terrain, Obstacle, and Aerodrome Mapping Data, RTCA Paper No. 107–04/PMC–326, prepared by SC–193.
- Final Draft, Revised DO–282-Minimum Operational Performance Standards for Universal Access Transceiver (UAT) Automatic Dependent Survelliance-Boardcast (ADS–B), RTCA Paper No. 081–04/PMC–324, prepared by SC–186
- Final Draft, Assessment of Radio Frequency Interference Relevant to the GNSS L5/E5A Frequency Band, RTCA Paper No. 110–04/PMC–327, prepared by SC–159
- Final Draft, Minimum Operational Performance Standards for Nickel-Cadmium and Lead Acid Batteries, RTCA Paper No. 109–04/PMC–327, prepared by SC–197
- Final Draft Revised DO–257, Interoperability Requirements for ATS Applications Using ARING 622 Data Communications, RTCA Paper No. 112–04/PMC–329, prepared by SC–189
- Final Draft Revised DO–280, Interoperability Requirements for ATN baseline 1 (INTEROP ATN B1), RTCA Paper No. 113–04/PMC–330, prepared by SC–189.
- Discussion:
- Special Committee 159, Global Positioning (GPS)
- Consider Proposal to Develop a Ground-Based Regional Augmentation System (GRAS) MOPS
- Reveiw/Approve Revised Terms of Reference
- Unmanned Aircraft-Discussion New Committee Request
- Special Committee Chairman's Report
- Action Item Review:
- Possible New SC–189 Activity-Interoperability Requirements for Mixed Data Communications
- Review/Status
- Requirements Focus Group
- Review/Status
- Closing Session (Other Business, Document Production, Data and Place of Next Meeting, Adjourn)

Attendance is open to the interested public but limited to space availability. With the approval of the chairmen, members of the public may present oral statements at the meeting. Persons wishing to present statements or obtain information should contact the person listed in the **FOR FURTHER INFORMATION CONTACT** section. Members of the public may present a written statement to the committee at any time.

Issued in Washington, DC, on July 2, 2004.

Robert Zoldos,

FAA System Engineer, RTCA Advsiory Committee.

[FR Doc. 04–16109 Filed 7–15–04; 8:45 am]

BILLING CODE 4910–13–M

DEPARTMENT OF TRANSPORTATION

Federal Aviation Administration

RTCA Special Committee 200: Integrated Modular Avionics (IMA)/ EUROCAE WG–60

AGENCY: Federal Aviation Administration (FAA), DOT.

ACTION: Notice of RTCA Special Committee 200 meeting.

SUMMARY: The FAA is issuing this notice to advise the public of a meeting of RTCA Special Committee 200: Integrated Modular Avionics.

DATES: The meeting will be held on July 20–23, 2004 from 9 a.m. to 5 p.m.

ADDRESSES: The meeting will be held at RTCA, 1828 L Street, NW., Suite 805, Washington, DC, 20036–5133.

FOR FURTHER INFORMATION CONTACT: (1) RTCS Secretariat, 1828 L Street, NW., Suite 805, Washington, DC 20036–5133; telephone (202) 833–9339; fax (202) 833–9434; web site *http://www.rtca.org.*

SUPPLEMENTARY INFORMATION: Pursuant to section 10(a)(2) of the Federal Advisory Committee Act (Pub. L. 92–463, 5 U.S.C., appendix 2), notice is hereby given for a Special Committee 200 meeting. The agenda will include:

- July 20:
  - Editorial Team Meeting
  - Subgroups meet in working sessions
- July 21:
  - Opening Session (Welcome, Introductory and Administrative Remarks, Review Agenda Summary of Previous Meeting)
  - Review Action Items
  - Reports on Related Committees Activities
  - Review and Approve Subgroup Actitivites
  - Review Status of Document
  - Assignment of Action Items
  - Subgroups Meet in Working Sessions
- July 22:
  - Subgroups Meet in Working Sessions
  - Inter-Subgroups Meet
- July 23:
  - Subgroup Reports
  - Review Status of Document
  - Plans for Editorial Group Activities
  - Review and Assignment of Action Items
  - Closing Session (Make Assignments, Date and Place of Next Meeting, Closing Remarks, Adjourn)

Attendance is open to the interested public but limited to space availability. With the approval of the chairman, members of the public may present oral statements at the meeting. Persons wishing to present statements or obtain information should contact the person listed in the **FOR FURTHER INFORMATION CONTACT** section. Members of the public may present a written statement to the committee at any time.

Issued in Washington, DC, on June 23, 2004.

Robert Zoldos,

FAA Systems Engineer, RTCA Advisory Committee.

[FR Doc. 04–16108 Filed 7–15–04; 8:45 am]

BILLING CODE 4910–13–M

DEPARTMENT OF TRANSPORTATION

Surface Transportation Board

[STB Finance Docket No. 34516]

The Indiana Northeastern Railroad Company-Acquisition Exemption——Branch and St. Joseph Counties Rail Users Association, Inc.

The Indiana Northeastern Railroad Company, Inc. (IN), a Class III rail carrier, has filed a verified notice of exemption under 49 CFR 1150.41 to acquire from the Branch and St. Joseph Counties Rail Users Association, Inc., a 19.88-mile line of railroad between milepost 386.96 near Coldwater, MI, and milepost 406.84, near Sturgis, MI. IN has been operating this line since 2002.[1]

IN certifies that its projected revenues as a result of this transaction will not result in the creation of a Class II or a Class I rail carrier.

The transaction was scheduled to be consummated on or soon after July 1, 2004.

If the verified notice contains false or misleading information, the exemption is void *ab initio.* Petitions to revoke the exemption under 49 U.S.C. 10502(d) may be filed at any time. The filing of a petition to revoke will not automatically stay the transaction.

An original and 10 copies of all pleadings, referring to STB Finance Docket No. 34516, must be filed with the Surface Transportation Board, 1925 K Street, NW., Washington, DC 20423–0001. In addition, a copy of each pleading must be served on Carl M. Miller, 618 Professional Park Dr., P.O. Box 332, New Haven, IN 46774.

Board decisions and notices are available on our Web site at ''*www.stb.dot.gov.*''

Decided: July 9, 2004.

By the Board, David M. Konschnik, Director, Office of Proceedings.

Vernon A. Williams,

Secretary.

[FR Doc. 04–16071 Filed 7–15–04; 8:45 am]

BILLING CODE 4915–01–P

[1] *See Indiana Northeastern Railroad Company—Change in Operators Exemption—Branch and St. Joseph Counties Rail Users Association, Inc.,* STB Finance Docket No. 34273 (STB served Nov. 21, 2002).

DEPARTMENT OF TRANSPORTATION

Surface Transportation Board

[STB Docket No. AB–6 (Sub–No. 401X)]

The Burlington Northern and Santa Fe Railway Company—Abandonment Exemption—In Polk County, IA

The Burlington Northern and Santa Fe Railway Company (BNSF) has filed a notice of exemption under 49 CFR part 1152 subpart F—*Exempt Abandonments* to abandon a 1.88-mile line of railroad, extending from milepost 67.38 to milepost 1.45, near Des Moines, in Polk County, IA.[1] The line traverses United States Postal Service ZIP Code 50309.

BNSF has certified that: (1) No local traffic has moved over the line for at least 2 years; (2) there is no overhead traffic to be rerouted; (3) no formal complaint filed by a user of rail service on the line (or by a state or local government entity acting on behalf of such user) regarding cessation of service over the line either is pending with the Surface Transportation Board (Board) or with any U.S. District Court or has been decided in favor of complainant within the 2-year period; and (4) the requirements at 49 CFR 1105.7 (environmental reports), 49 CFR 1105.8 (historic reports), 49 CFR 1105.11 (transmittal letter), 49 CFR 1105.12 (newspaper publication), and 49 CFR 1152.50(d)(1) (notice to governmental agencies) have been met.

As a condition to this exemption, any employee adversely affected by the abandonment shall be protected under *Oregon Short Line R. Co.—Abandonment—Goshen,* 360 I.C.C. 91 (1979). To address whether this condition adequately protects affected employees, a petition for partial

[1] The abandonment involves BNSF track segments with non-contiguous mileposts. Therefore, total mileage does not correspond to the milepost designations of the endpoints.

revocation under 49 U.S.C. 10502(d) must be filed.

Provided no formal expression of intent to file an offer of financial assistance (OFA) has been received, this exemption will be effective on August 17, 2004, unless stayed pending reconsideration. Petitions to stay that do not involve environmental issues,[2] formal expressions of intent to file an OFA under 49 CFR 1152.27(c)(2),[3] and trail use/rail banking requests under 49 CFR 1152.29 must be filed by July 26, 2004. Petitions to reopen or requests for public use conditions under 49 CFR 1152.28 must be filed by August 5, 2004, with the Surface Transportation Board, 1925 K Street, NW., Washington, DC 20423–0001.

A copy of any petition filed with the Board should be sent to BNSF's representative: Michael Smith, Freeborn & Peters, 311 S. Wacker Dr., Suite 3000, Chicago, IL 60606–6677.

If the verified notice contains false or misleading information, the exemption is void *ab initio.*

BNSF has filed a separate environmental report which addresses the abandonment's effects, if any, on the environment and historic resources. SEA will issue an environmental assessment (EA) by July 23, 2004. Interested persons may obtain a copy of the EA by writing to SEA (Room 500, Surface Transportation Board, Washington, DC 20423–0001) or by calling SEA, at (202) 565–1539. (Assistance for the hearing impaired is available through the Federal Information Relay Service (FIRS) at 1–800–877–8339.) Comments on environmental and historic preservation matters must be filed within 15 days after the EA becomes available to the public.

Environmental, historic preservation, public use, or trail use/rail banking conditions will be imposed, where appropriate, in a subsequent decision.

Pursuant to the provisions of 49 CFR 1152.29(e)(2), BNSF shall file a notice of consummation with the Board to signify that it has exercised the authority granted and fully abandoned the line. If consummation has not been effected by BNSF's filing of a notice of consummation by July 16, 2005, and there are no legal or regulatory barriers to consummation, the authority to abandon will automatically expire.

Board decisions and notices are available on our Web site at *http://www.stb.dot.gov.*

Decided: July 9, 2004.

By the Board, David M. Konschnik, Director, Office of Proceedings.

Vernon A. Williams,

Secretary.

[FR Doc. 04–16200 Filed 7–15–04; 8:45 am]

BILLING CODE 4915–01–P

[2] The Board will grant a stay if an informed decision on environmental issues (whether raised by a party or by the Board's Section of Environmental Analysis (SEA) in its independent investigation) cannot be made before the exemption's effective date. *See Exemption of Out-of-Service Rail Lines,* 5 I.C.C.2d 377 (1989). Any request for a stay should be filed as soon as possible so that the Board may take appropriate action before the exemption's effective date.

[3] Each OFA must be accompanied by the filing fee, which currently is set at $1,100. *See* 49 CFR 1002.2(f)(25).

DEPARTMENT OF TRANSPORTATION

Surface Transportation Board

[STB Docket No. AB–290 (Sub–No. 251X) and Docket No. AB–866X]

Norfolk Southern Railway Company, et al; Abandonment Exemption and Discontinuance of Service Exemption in Chowan County, NC

Norfolk Southern Railway Company (NSR) and North Carolina & Virginia Railway Company, Inc., The Chesapeake and Albemarle Division (NCVA) have jointly filed a notice of exemption under 49 CFR Part 1152 Subpart F—*Exempt Abandonments and Discontinuances of Service* for NSR to abandon, and for NCVA to discontinue service under a lease from NSR over, a 0.33-mile line of railroad between approximately milepost NS–73.67 and milepost NS–74.00 in Edenton, Chowan County, NC. The line traverses United States Postal Service Zip Code 27932.

NSR and NCVA have certified that: (1) No local traffic has moved over the line for at least 2 years; (2) no overhead traffic has moved over the line for at least 2 years and overhead traffic, if there were any, could be rerouted over other lines; (3) no formal complaint filed by a user of rail service on the line (or by a State or local government entity acting on behalf of such user) regarding cessation of service over the line either is pending with the Surface Transportation Board (Board) or with any U.S. District Court or has been decided in favor of complainant within the 2-year period; and (4) the requirements at 49 CFR 1105.7 (environmental report), 49 CFR 1105.8 (historic report), 49 CFR 1105.11 (transmittal letter), 49 CFR 1105.12 (newspaper publication), and 49 CFR 1152.50(d)(1) (notice to governmental agencies) have been met.

As a condition to these exemptions, any employee adversely affected by the abandonment or discontinuance shall be protected under *Oregon Short Line R. Co.—Abandonment—Goshen,* 360 I.C.C. 91 (1979). To address whether this condition adequately protects affected employees, a petition for partial revocation under 49 U.S.C. 10502(d) must be filed.

Provided no formal expression of intent to file an offer of financial assistance (OFA) has been received, these exemptions will be effective on August 17, 2004,[1] unless stayed pending reconsideration. Petitions to stay that do not involve environmental issues,[2] formal expressions of intent to file an OFA under 49 CFR 1152.27(c)(2),[3] and trail use/rail banking requests under 49 CFR 1152.29 must be filed by July 26, 2004. Petitions to reopen or requests for public use conditions under 49 CFR 1152.28 must be filed by August 5, 2004, with: Surface Transportation Board, 1925 K Street, NW., Washington, DC 20423–0001.[4]

A copy of any petition filed with the Board should be sent to applicants' representatives: James R. Paschall, Three Commercial Place, Norfolk, VA 23510; and Gary A. Laakso, 5300 Broken Sound Blvd., NW., 2nd Floor, Boca Raton, FL 33487.

If the verified notice contains false or misleading information, the exemption is void *ab initio.*

NSR and NCVA have filed an environmental report which addresses the effects, if any, of the abandonment and discontinuance on the environment and historic resources. SEA will issue an environmental assessment (EA) by July 23, 2004. Interested persons may obtain a copy of the EA by writing to SEA (Room 500, Surface Transportation

[1] Pursuant to 49 CFR 1152.50(d)(2), the railroad must file a verified notice with the Board at least 50 days before the abandonment or discontinuance is to be consummated. While applicants initially indicated a proposed consummation date of August 16, 2004, because the verified notice was filed on June 28, 2004, consummation may not take place prior to August 17, 2004. By facsimile filed on July 6, 2004, NSR's representative confirmed that the consummation date will be August 17, 2004.

[2] The Board will grant a stay if an informed decision on environmental issues (whether raised by a party or by the Board's Section of Environmental Analysis (SEA) in its independent investigation) cannot be made before the exemption's effective date. *See Exemption of Out-of-Service Rail Lines,* 5 I.C.C.2d 377 (1989). Any request for a stay should be filed as soon as possible so that the Board may take appropriate action before the exemption's effective date.

[3] Each OFA must be accompanied by the filing fee, which currently is set at $1,100. *See* 49 CFR 1002.2(f)(25).

[4] NSR states that the right-of-way underlying the segment is being sold to Dominion Resources (Virginia Power). According to NSR, this use of the right-of-way, which will benefit the public through more efficient electric power transmission service in the area, precludes any potential public use other than that proposed by Virginia Power.

Board, Washington, DC 20423) or by calling SEA, at (202) 565–1539. [Assistance for the hearing impaired is available through the Federal Information Relay Service (FIRS) at 1–800–877–8339.] Comments on environmental and historic preservation matters must be filed within 15 days after the EA becomes available to the public.

Environmental, historic preservation, public use, or trail use/rail banking conditions will be imposed, where appropriate, in a subsequent decision.

Pursuant to the provisions of 49 CFR 1152.29(e)(2), NSR shall file a notice of consummation with the Board to signify that it has exercised the authority granted and fully abandoned the line. If consummation has not been effected by NSR's filing of a notice of consummation by July 16, 2005, and there are no legal or regulatory barriers to consummation, the authority to abandon will automatically expire.

Board decisions and notices are available on our Web site at *www.stb.dot.gov.*

Decided: July 9, 2004.

By the Board, David M. Konschnik, Director, Office of Proceedings.

Vernon A. Williams,

Secretary.

[FR Doc. 04–16078 Filed 7–15–04; 8:45 am]

BILLING CODE 4915–01–P

DEPARTMENT OF THE TREASURY

Office of the Secretary

Notice of Call for Redemption: 10⅜ Percent Treasury Bonds of 2004–09

July 15, 2004.

1. Public notice is hereby given that all outstanding 10⅜ percent Treasury Bonds of 2004–09 (CUSIP No. 912810 CK 2) dated November 15, 1979, due November 15, 2009, are hereby called for redemption at par on November 15, 2004, on which date interest on such bonds will cease.

2. Full information regarding the presentation and surrender of such bonds held in coupon and registered form for redemption under this call will be found in Department of the Treasury Circular No. 300 dated March 4, 1973, as amended (31 CFR Part 306), and from the Definitives Section of the Bureau of the Public Debt (telephone (304) 480–7936), and on the Bureau of the Public Debt's Web site, *http://www.publicdebt.treas.gov.*

3. Redemption payments for such bonds held in book-entry form, whether on the books of the Federal Reserve Banks or in Treasury-Direct accounts, will be made automatically on November 15, 2004.

Donald V. Hammond,

Fiscal Assistant Secretary.

[FR Doc. 04–16024 Filed 7–15–04; 8:45 am]

BILLING CODE 4810–40–M

DEPARTMENT OF THE TREASURY

Internal Revenue Service

[PS–97–91; PS–101–90]

Proposed Collection; Comment Request for Regulation Project

AGENCY: Internal Revenue Service (IRS), Treasury.

ACTION: Notice and request for comments.

SUMMARY: The Department of the Treasury, as part of its continuing effort to reduce paperwork and respondent burden, invites the general public and other Federal agencies to take this opportunity to comment on proposed and/or continuing information collections, as required by the Paperwork Reduction Act of 1995, Public Law 104–13 (44 U.S.C. 3506(c)(2)(A)). Currently, the IRS is soliciting comments concerning an existing final regulation, PS–97–91 and PS–101–90 (TD 8448), Enhanced Oil Recovery Credit (sections 1.43–3(a)(3) and 1.43–3(b)(3)).

DATES: Written comments should be received on or before September 14, 2004, to be assured of consideration.

ADDRESSES: Direct all written comments to Glenn Kirkland, Internal Revenue Service, room 6411, 1111 Constitution Avenue, NW., Washington, DC 20224.

FOR FURTHER INFORMATION CONTACT: Requests for additional information or copies of the regulations should be directed to Larnice Mack at Internal Revenue Service, room 6407, 1111 Constitution Avenue, NW., Washington, DC 20224, or at (202) 622–3179, or through the Internet at *Larnice.Mack@irs.gov.*

SUPPLEMENTARY INFORMATION:

Title: Enhanced Oil Recovery Credit.

OMB Number: 1545–1292.

Regulation Project Number: PS–97–91 and PS–101–90.

Abstract: This regulation provides guidance concerning the costs subject to the enhanced oil recovery credit, the circumstances under which the credit is available, and procedures for certifying to the Internal Revenue Service that a project meets the requirements of section 43(c) of the Internal Revenue Code.

Current Actions: There is no change to this existing regulation.

Type of Review: Extension of OMB approval.

Affected Public: Individuals or households, and business or other for-profit organizations.

Estimated Number of Respondents: 20.

Estimated Time Per Respondent: 73 minutes.

Estimated Total Annual Burden Hours: 1,460.

The following paragraph applies to all of the collections of information covered by this notice:

An agency may not conduct or sponsor, and a person is not required to respond to, a collection of information unless the collection of information displays a valid OMB control number.

Books or records relating to a collection of information must be retained as long as their contents may become material in the administration of any internal revenue law. Generally, tax returns and tax return information are confidential, as required by 26 U.S.C. 6103.

Request for Comments: Comments submitted in response to this notice will be summarized and/or included in the request for OMB approval. All comments will become a matter of public record. Comments are invited on: (a) Whether the collection of information is necessary for the proper performance of the functions of the agency, including whether the information shall have practical utility; (b) the accuracy of the agency's estimate of the burden of the collection of information; (c) ways to enhance the quality, utility, and clarity of the information to be collected; (d) ways to minimize the burden of the collection of information on respondents, including through the use of automated collection techniques or other forms of information technology; and (e) estimates of capital or start-up costs and costs of operation, maintenance, and purchase of services to provide information.

Approved: July 9, 2004.

Glenn Kirkland,

IRS Reports Clearance Officer.

[FR Doc. 04–16236 Filed 7–15–04; 8:45 am]

BILLING CODE 4830–01–P

DEPARTMENT OF THE TREASURY

Internal Revenue Service

[PS–276–76]

Proposed Collection; Comment Request for Regulation Project

AGENCY: Internal Revenue Service (IRS), Treasury.

ACTION: Notice and request for comments.

SUMMARY: The Department of the Treasury, as part of its continuing effort to reduce paperwork and respondent burden, invites the general public and other Federal agencies to take this opportunity to comment on proposed and/or continuing information collections, as required by the Paperwork Reduction Act of 1995, Public Law 104–13(44 U.S.C. 3506(c)(2)(A)). Currently, the IRS is soliciting comments concerning an existing final regulation, PS–276–76 (TD 8586), Treatment of Gain From Disposition of Certain Natural Resource Recapture Property (Sections 1.1254–1(c)(3) and 1.1254–5(d)(2)).

DATES: Written comments should be received on or before September 14, 2004, to be assured of consideration.

ADDRESSES: Direct all written comments to Glenn Kirkland, Internal Revenue Service, room 6411, 1111 Constitution Avenue, NW., Washington, DC 20224.

FOR FURTHER INFORMATION CONTACT: Requests for additional information or copies of the regulations should be directed to Larnice Mack at Internal Revenue Service, room 6407, 1111 Constitution Avenue, NW., Washington, DC 20224, or at (202) 622–3179, or through the Internet at *Larnice.Mack@irs.gov.*

SUPPLEMENTARY INFORMATION:

Title: Treatment of Gain From Disposition of Certain Natural Resource Recapture Property.

OMB Number: 1545–1352.

Regulation Project Number: PS–276–76.

Abstract: This regulation prescribes rules for determining the tax treatment of gain from the disposition of natural resource recapture property in accordance with Internal Revenue Code section 1254. Gain is treated as ordinary income in an amount equal to the intangible drilling and development costs and depletion deductions taken with respect to the property. The information that taxpayers are required to retain will be used by the IRS to determine whether a taxpayer has properly characterized gain on the disposition of section 1254 property.

Current Actions: There is no change to this existing regulation.

Type of Review: Extension of OMB approval.

Affected Public: Individuals and business or other for-profit organizations.

Estimated Number of Respondents: 400.

Estimated Time Per Respondent: 5 hours.

Estimated Total Annual Burden Hours: 2000.

The following paragraph applies to all of the collections of information covered by this notice:

An agency may not conduct or sponsor, and a person is not required to respond to, a collection of information unless the collection of information displays a valid OMB control number.

Books or records relating to a collection of information must be retained as long as their contents may become material in the administration of any internal revenue law. Generally, tax returns and tax return information are confidential, as required by 26 U.S.C. 6103.

Request for Comments: Comments submitted in response to this notice will be summarized and/or included in the request for OMB approval. All comments will become a matter of public record. Comments are invited on: (a) Whether the collection of information is necessary for the proper performance of the functions of the agency, including whether the information shall have practical utility; (b) the accuracy of the agency's estimate of the burden of the collection of information; (c) ways to enhance the quality, utility, and clarity of the information to be collected; (d) ways to minimize the burden of the collection of information on respondents, including through the use of automated collection techniques or other forms of information technology; and (e) estimates of capital or start-up costs and costs of operation, maintenance, and purchase of services to provide information.

Approved: July 9, 2004.

Glenn Kirkland,

IRS Reports Clearance Officer.

[FR Doc. 04–16237 Filed 7–15–04; 8:45 am]

BILLING CODE 4830–01–P

DEPARTMENT OF THE TREASURY

Internal Revenue Service

Proposed Collection; Comment Request for Form 8826

AGENCY: Internal Revenue Service (IRS), Treasury.

ACTION: Notice and request for comments.

SUMMARY: The Department of the Treasury, as part of its continuing effort to reduce paperwork and respondent burden, invites the general public and other Federal agencies to take this opportunity to comment on proposed and/or continuing information collections, as required by the Paperwork Reduction Act of 1995, Public Law 104–13(44 U.S.C. 3506(c)(2)(A)). Currently, the IRS is soliciting comments concerning Form 8826, Disabled Access Credit.

DATES: Written comments should be received on or before September 14, 2004, to be assured of consideration.

ADDRESSES: Direct all written comments to Glenn Kirkland, Internal Revenue Service, room 6411, 1111 Constitution Avenue, NW., Washington, DC 20224.

FOR FURTHER INFORMATION CONTACT: Requests for additional information or copies of the form and instructions should be directed to Larnice Mack at Internal Revenue Service, room 6407, 1111 Constitution Avenue, NW., Washington, DC 20224, or at (202) 622–3179, or through the Internet at *Larnice.Mack@irs.gov*.

SUPPLEMENTARY INFORMATION:

Title: Disabled Access Credit.

OMB Number: 1545–1205.

Form Number: Form 8826.

Abstract: Internal Revenue Code section 44 allows eligible small businesses to claim a nonrefundable income tax credit of 50% of the amount of eligible access expenditures for any tax year that exceed $250 but do not exceed $10,250. Form 8826 figures the credit and the tax liability limit.

Current Actions: There are no changes being made to Form 8826 at this time.

Type of Review: Extension of a currently approved collection.

Affected Pubic: Business or other for-profit organizations, farms and individuals.

Estimated Number of Respondents: 26,133.

Estimated Time Per Respondent: 9 hrs., 26 minutes.

Estimated Total Annual Burden Hours: 246,696.

The following paragraph applies to all of the collections of information covered by this notice:

An agency may not conduct or sponsor, and a person is not required to respond to, a collection of information unless the collection of information displays a valid OMB control number. Books or records relating to a collection of information must be retained as long as their contents may become material

in the administration of any internal revenue law. Generally, tax returns and tax return information are confidential, as required by 26 U.S.C. 6103.

Request for Comments: Comments submitted in response to this notice will be summarized and/or included in the request for OMB approval. All comments will become a matter of public record. Comments are invited on: (a) Whether the collection of information is necessary for the proper performance of the functions of the agency, including whether the information shall have practical utility; (b) the accuracy of the agency's estimate of the burden of the collection of information; (c) ways to enhance the quality, utility, and clarity of the information to be collected; (d) ways to minimize the burden of the collection of information on respondents, including through the use of automated collection techniques or other forms of information technology; and (e) estimates of capital or start-up costs and costs of operation, maintenance, and purchase of services to provide information.

Approved: July 9, 2004.

Glenn Kirkland,

IRS Reports Clearance Officer.

[FR Doc. 04–16238 Filed 7–15–04; 8:45 am]

BILLING CODE 4830–01–P

DEPARTMENT OF THE TREASURY

Internal Revenue Service

Proposed Collection; Comment Request for Form 8835

AGENCY: Internal Revenue Service (IRS), Treasury.

ACTION: Notice and request for comments.

SUMMARY: The Department of the Treasury, as part of its continuing effort to reduce paperwork and respondent burden, invites the general public and other Federal agencies to take this opportunity to comment on proposed and/or continuing information collections, as required by the Paperwork Reduction Act of 1995, Public Law 104–13 (44 U.S.C. 3506(c)(2)(A)). Currently, the IRS is soliciting comments concerning Form 8835, Renewable Electricity Production Credit.

DATES: Written comments should be received on or before September 14, 2004, to be assured of consideration.

ADDRESSES: Direct all written comments to Glenn Kirkland, Internal Revenue Service, room 6411, 1111 Constitution Avenue, NW., Washington, DC 20224.

FOR FURTHER INFORMATION CONTACT: Requests for additional information or copies of the form and instructions should be directed to Larnice Mack at Internal Revenue Service, room 6407, 1111 Constitution Avenue, NW., Washington, DC 20224, or at (202) 622–3179, or through the Internet at *Larnice.Mack@irs.gov*.

SUPPLEMENTARY INFORMATION:

Title: Renewable Electricity Production Credit.

OMB Number: 1545–1362.

Form Number: Form 8835.

Abstract: Form 8835 is used to claim the renewable electricity production credit. The credit is allowed for the sale of electricity produced in the United States or U.S. possessions from qualified energy resources. The IRS uses the information reported on the form to ensure that the credit is correctly computed.

Current Actions: There are no changes being made to Form 8835 at this time.

Type of Review: Extension of a current OMB approval.

Affected Public: Business or other for-profit organizations and individuals.

Estimated Number of Respondents: 70.

Estimated Time Per Respondent: 12 hrs. 29 minutes.

Estimated Total Annual Burden Hours: 874.

The following paragraph applies to all of the collections of information covered by this notice:

An agency may not conduct or sponsor, and a person is not required to respond to, a collection of information unless the collection of information displays a valid OMB control number. Books or records relating to a collection of information must be retained as long as their contents may become material in the administration of any internal revenue law. Generally, tax returns and tax return information are confidential, as required by 26 U.S.C. 6103.

Request for Comments: Comments submitted in response to this notice will be summarized and/or included in the request for OMB approval. All comments will become a matter of public record. Comments are invited on: (a) Whether the collection of information is necessary for the proper performance of the functions of the agency, including whether the information shall have practical utility; (b) the accuracy of the agency's estimate of the burden of the collection of information; (c) ways to enhance the quality, utility, and clarity of the information to be collected; (d) ways to minimize the burden of the collection of information on respondents, including through the use of automated collection techniques or other forms of information technology; and (e) estimates of capital or start-up costs and costs of operation, maintenance, and purchase of services to provide information.

Approved: July 9, 2004.

Glenn Kirkland,

IRS Reports Clearance Officer.

[FR Doc. 04–16239 Filed 7–15–04; 8:45 am]

BILLING CODE 4830–01–P

DEPARTMENT OF THE TREASURY

Internal Revenue Service

[CO–99–91]

Proposed Collection; Comment Request for Regulation Project

AGENCY: Internal Revenue Service (IRS), Treasury.

ACTION: Notice and request for comments.

SUMMARY: The Department of the Treasury, as part of its continuing effort to reduce paperwork and respondent burden, invites the general public and other Federal agencies to take this opportunity to comment on proposed and/or continuing information collections, as required by the Paperwork Reduction Act of 1995, Public Law 104–13 (44 U.S.C. 3506(c)(2)(A)). Currently, the IRS is soliciting comments concerning an existing final regulation, CO–99–91 (TD 8490), Limitations on Corporate Net Operating Loss (section 1.382–3).

DATES: Written comments should be received on or before September 14, 2004, to be assured of consideration.

ADDRESSES: Direct all written comments to Glenn Kirkland, Internal Revenue Service, room 6411, 1111 Constitution Avenue, NW., Washington, DC 20224.

FOR FURTHER INFORMATION CONTACT: Requests for additional information or copies of the regulations should be directed to Larnice Mack at Internal Revenue Service, room 6407, 1111 Constitution Avenue, NW., Washington, DC 20224, or at (202) 622–3179, or through the Internet at *Larnice.Mack@irs.gov.*

SUPPLEMENTARY INFORMATION:

Title: Limitations on Corporate Net Operating Loss.

OMB Number: 1545–1345.

Regulation Project Number: CO–99–91.

Abstract: This regulation modifies the application of the segregation rules under Internal Revenue Code section

382 in the case of certain issuances of stock by a stock by a loss corporation. The regulation provides exceptions to the segregation rules for certain small issuances of stock and for certain other issuances of stock for cash. The regulation also provides that taxpayers may make an irrevocable election to apply the exceptions retroactively.

Current Actions: There is no change to this existing regulation.

Type of Review: Extension of a currently approved collection.

Affected Public: Business or other for-profit organizations.

Estimated Number of Respondents: 1.

Estimated Time Per Respondent: 1 hr.

Estimated Total Annual Burden Hours: 1.

The following paragraph applies to all of the collections of information covered by this notice:

An agency may not conduct or sponsor, and a person is not required to respond to, a collection of information unless the collection of information displays a valid OMB control number. Books or records relating to a collection of information must be retained as long as their contents may become material in the administration of any internal revenue law. Generally, tax returns and tax return information are confidential, as required by 26 U.S.C. 6103.

Request for Comments: Comments submitted in response to this notice will be summarized and/or included in the request for OMB approval. All comments will become a matter of public record. Comments are invited on: (a) Whether the collection of information is necessary for the proper performance of the functions of the agency, including whether the information shall have practical utility; (b) the accuracy of the agency's estimate of the burden of the collection of information; (c) ways to enhance the quality, utility, and clarity of the information to be collected; (d) ways to minimize the burden of the collection of information on respondents, including through the use of automated collection techniques or other forms of information technology; and (e) estimates of capital or start-up costs and costs of operation, maintenance, and purchase of services to provide information.

Approved: July 9, 2004.

Glenn Kirkland,

IRS Reports Clearance Officer.

[FR Doc. 04–16240 Filed 7–15–04; 8:45 am]

BILLING CODE 4830–01–P

DEPARTMENT OF VETERANS AFFAIRS

[OMB Control No. 2900–New–Bio-terrorism]

Agency Information Collection: Emergency Submission for OMB Review; Comment Request

AGENCY: Veterans Health Administration, Department of Veterans Affairs.

ACTION: Notice.

SUMMARY: In compliance with the Paperwork Reduction Act (PRA) of 1995 (44 U.S.C., 3501–3521), this notice announces that the United States Department of Veterans Affairs (VA), has submitted to the Office of Management and Budget (OMB) the following emergency proposal for the collection of information under the provisions of the Paperwork Reduction Act (44 U.S.C. 3507(j)(1)). An emergency clearance is being requested in response to Public Law 107–188, ''Public Health Security and Bio-terrorism Preparedness and Response Act of 2002.'' The act calls: ''To improve the ability of the United States to prevent, prepare for and respond to bio-terrorism and other public health emergencies.'' VA would like to conduct a pilot test to measure the effectiveness of disseminating bio-terrorism educational material to veterans.

DATES: Comments must be submitted on or before July 23, 2004.

FOR FURTHER INFORMATION OR A COPY OF THE SUBMISSION CONTACT: Denise McLamb, Records Management Service (005E3), Department of Veterans Affairs, 810 Vermont Avenue, NW., Washington, DC 20420, (202) 273–8030, FAX (202) 273–5981 or e-mail: *denise.mclamb@mail.va.gov*. Please refer to ''OMB Control No. 2900–New–Bio-terrorism.''

Send comments and recommendations concerning any aspect of the information collection to VA's OMB Desk Officer, OMB Human Resources and Housing Branch, New Executive Office Building, Room 10235, Washington, DC 20503, (202) 395–7316 or FAX (202) 395–6974. Please refer to ''2900–New–Bio-terrorism.''

SUPPLEMENTARY INFORMATION:

Title: Veterans Survey on Bio-terrorism.

OMB Control Number: 2900–New–Bio–terrorism.

Type of Review: New collection.

Abstract: The Department of Veterans Affairs in response to Public Law 107–188, ''Public Health Security and Bio-terrorism Preparedness and Response Act of 2002'' will conduct a survey to evaluate how veterans obtain information about bio-terrorism in the past, or if they wish to obtain information in the future; their knowledge about the three different types of potential biological agents; their attitudes and perceptions related to experiencing, surviving a bio-terrorism in the future as well as their confidence in the role VA will play in the event of a bio-terrorism act, behavioral disposition and anxiety/anger over a future event and with respect to any educational material received on bio-terrorism. The survey will be used to determine the number of veterans who receive benefits but do not use the health care facilities and would they use VA facilities as their primary source of health care in the event a future bio-terrorism incident.

Affected Public: Individuals or households.

Estimated Total Annual Burden: 1,873 hours.

Estimated Average Burden Per Respondent: 27 minutes.

Frequency of Response: Twice.

Estimated Number of Respondents: 4,210.

Dated: July 6, 2004.

By direction of the Secretary.

Loise Russell,

Director, Records Management Service.

[FR Doc. 04–16176 Filed 7–15–04; 8:45 am]

BILLING CODE 8320–01–P

DEPARTMENT OF VETERANS AFFAIRS

[OMB Control No. 2900–0583]

Proposed Information Collection Activity: Proposed Collection; Comment Request

AGENCY: Veterans Health Administration, Department of Veterans Affairs.

ACTION: Notice.

SUMMARY: The Veterans Health Administration (VHA) is announcing an opportunity for public comment on the proposed collection of certain information by the agency. Under the Paperwork Reduction Act (PRA) of 1995, Federal agencies are required to publish notice in the **Federal Register** concerning each proposed collection of information, including each proposed revision of a currently approved collection, and allow 60 days for public comment in response to the notice. This notice solicits comments on the disclosure requirements imposed on non-VA physicians to insure that patients have sufficient information to

provide educated and informed consent for medical procedures.

DATES: Written comments and recommendations on the proposed collection of information should be received on or before September 14, 2004.

ADDRESSES: Submit written comments on the collection of information to Ann Bickoff, Veterans Health Administration (193B1), Department of Veterans Affairs, 810 Vermont Avenue, NW., Washington, DC 20420 or e-mail *ann.bickoff@mail.va.gov*. Please refer to ''OMB Control No. 2900–0583'' in any correspondence.

FOR FURTHER INFORMATION CONTACT: Ann Bickoff at (202) 273–8310.

SUPPLEMENTARY INFORMATION: Under the PRA of 1995 (Pub. L. 104–13; 44 U.S.C., 3501–3521), Federal agencies must obtain approval from the Office of Management and Budget (OMB) for each collection of information they conduct or sponsor. This request for comment is being made pursuant to Section 3506(c)(2)(A) of the PRA.

With respect to the following collection of information, VHA invites comments on: (1) Whether the proposed collection of information is necessary for the proper performance of VHA's functions, including whether the information will have practical utility; (2) the accuracy of VHA's estimate of the burden of the proposed collection of information; (3) ways to enhance the quality, utility, and clarity of the information to be collected; and (4) ways to minimize the burden of the collection of information on respondents, including through the use of automated collection techniques or the use of other forms of information technology.

Title: Regulation for Informed Consent for Patient Care (Title 38 CFR 17.32).

OMB Control Number: 2900–0583.

Type of Review: Extension of a currently approved collection.

Abstract: VA informed consent regulation describes patient rights and responsibilities and the process for obtaining informed consent. It contains procedures that providers (including non-VA physicians who contract to perform services for VA on a fee-basis) must follow when seeking informed consent from a VA beneficiary (*e.g.*, discussion of the benefits, risk and alternatives for the recommended treatment or procedure and documentation of the patient's decision). The information provided is designed to ensure that the patients (or, when appropriate, the patient's representative or surrogate) have sufficient information to provide informed consent.

Affected Public: Individuals or households.

Estimated Total Annual Burden: 94,000 hours.

Estimated Average Burden Per Respondent: 15 minutes.

Frequency of Response: On occasion.

Estimated Number of Respondents: 376,000.

Dated: July 6, 2004.

By direction of the Secretary

Loise Russell,

Director, Records Management Service.

[FR Doc. 04–16177 Filed 7–15–04; 8:45 am]

BILLING CODE 8320–01–P

DEPARTMENT OF VETERANS AFFAIRS

[OMB Control No. 2900–0111]

Proposed Information Collection Activity: Proposed Collection; Comment Request

AGENCY: Veterans Benefits Administration, Department of Veterans Affairs.

ACTION: Notice.

SUMMARY: The Veterans Benefits Administration (VBA), Department of Veterans Affairs (VA), is announcing an opportunity for public comment on the proposed collection of certain information by the agency. Under the Paperwork Reduction Act (PRA) of 1995, Federal agencies are required to publish notice in the **Federal Register** concerning each proposed collection of information, including each proposed extension of a currently approved collection, and allow 60 days for public comment in response to the notice. This notice solicits comments for information needed to make determinations for release of liability and substitution of entitlement of veterans-sellers to the government on guaranteed, insured and direct loans.

DATES: Written comments and recommendations on the proposed collection of information should be received on or before September 14, 2004.

ADDRESSES: Submit written comments on the collection of information to Nancy J. Kessinger, Veterans Benefits Administration (20S52), Department of Veterans Affairs, 810 Vermont Avenue, NW., Washington, DC 20420 or e-mail *irmnkess@vba.va.gov*. Please refer to ''OMB Control No. 2900–0111'' in any correspondence.

FOR FURTHER INFORMATION CONTACT: Nancy J. Kessinger at (202) 273–7079 or FAX (202) 275–5947.

SUPPLEMENTARY INFORMATION: Under the PRA of 1995 (Pub. L. 104–13; 44 U.S.C., 3501–3521), Federal agencies must obtain approval from the Office of Management and Budget (OMB) for each collection of information they conduct or sponsor. This request for comment is being made pursuant to Section 3506(c)(2)(A) of the PRA.

With respect to the following collection of information, VBA invites comments on: (1) Whether the proposed collection of information is necessary for the proper performance of VBA's functions, including whether the information will have practical utility; (2) the accuracy of VBA's estimate of the burden of the proposed collection of information; (3) ways to enhance the quality, utility, and clarity of the information to be collected; and (4) ways to minimize the burden of the collection of information on respondents, including through the use of automated collection techniques or the use of other forms of information technology.

Title: Statement of Purchaser or Owner Assuming Seller's Loans, VA Form 26–6382.

OMB Control Number: 2900–0111.

Type of Review: Extension of a currently approved collection.

Abstract: If a veteran chooses to sell his or her VA guaranteed home, VA will allow a qualified purchaser to assume the veteran's loan and all the responsibility under the guaranty or insurance.

In regard to substitution of entitlement cases, eligible veteran purchasers must meet all requirements of liability in addition to having available loan guaranty entitlement. Purchasers who are assuming veterans' guaranteed, insured, and direct home loans, complete VA Form 26–6382. The information collected is essential to make a determination for release of liability as well as for credit underwriting determinations for substitution of entitlement.

Affected Public: Individuals or households.

Estimated Annual Burden: 1,875 hour.

Estimated Average Burden Per Respondent: 15 minutes.

Frequency of Response: One-time.

Estimated Number of Respondents: 7,500.

Dated: July 6, 2004.

By direction of the Secretary.

Loise Russell,

Director, Records Management Service.

[FR Doc. 04–16178 Filed 7–15–04; 8:45 am]

BILLING CODE 8320–01–P

DEPARTMENT OF VETERANS AFFAIRS

[OMB Control No. 2900–0180]

Proposed Information Collection Activity: Proposed Collection; Comment Request

AGENCY: Veterans Benefits Administration, Department of Veterans Affairs.

ACTION: Notice.

SUMMARY: The Veterans Benefits Administration (VBA), Department of Veterans Affairs (VA), is announcing an opportunity for public comment on the proposed collection of certain information by the agency. Under the Paperwork Reduction Act (PRA) of 1995, Federal agencies are required to publish notice in the **Federal Register** concerning each proposed collection of information, including each proposed extension of a currently approved collection, and allow 60 days for public comment in response to the notice. This notice solicits comments for information needed to determine whether proprietary schools receiving Federal financial assistance from VA and the Department of Education are in compliance with equal opportunity laws.

DATES: Written comments and recommendations on the proposed collection of information should be received on or before September 14, 2004.

ADDRESSES: Submit written comments on the collection of information to Nancy J. Kessinger, Veterans Benefits Administration (20S52), Department of Veterans Affairs, 810 Vermont Avenue, NW., Washington, DC 20420 or e-mail: *irmnkess@vba.va.gov.* Please refer to ''OMB Control No. 2900–0180'' in any correspondence.

FOR FURTHER INFORMATION CONTACT: Nancy J. Kessinger at (202) 273–7079 or FAX (202) 275–5947.

SUPPLEMENTARY INFORMATION: Under the PRA of 1995 (Pub. L. 104–13; 44 U.S.C. 3501–3521), Federal agencies must obtain approval from the Office of Management and Budget (OMB) for each collection of information they conduct or sponsor. This request for comment is being made pursuant to Section 3506(c)(2)(A) of the PRA.

With respect to the following collection of information, VBA invites comments on: (1) Whether the proposed collection of information is necessary for the proper performance of VBA's functions, including whether the information will have practical utility; (2) the accuracy of VBA's estimate of the burden of the proposed collection of information; (3) ways to enhance the quality, utility, and clarity of the information to be collected; and (4) ways to minimize the burden of the collection of information on respondents, including through the use of automated collection techniques or the use of other forms of information technology.

Title: Compliance Report of Proprietary Institutions, VA Form 20–4274.

OMB Control Number: 2900–0180.

Type of Review: Extension of a currently approved collection.

Abstract: VA Form 20–4274 is used to determine whether proprietary educational institutions receiving Federal financial assistance comply with applicable civil rights statute and regulations. The collected information is used to identify areas that may indicate, statistically, disparate treatment of minority group members.

Affected Public: Business or other for-profit, Federal Government.

Estimated Annual Burden: 155 hours.

Estimated Average Burden Per Respondent: 75 minutes.

Frequency of Response: On occasion.

Estimated Number of Respondents: 124.

Dated: July 6, 2004.

By direction of the Secretary.

Loise Russell,

Director, Records Management Service.

[FR Doc. 04–16179 Filed 7–15–04; 8:45 am]

BILLING CODE 8320–01–P

Federal Register

Friday,
July 16, 2004

Part II

Department of Labor

Mine Safety and Health Administration

30 CFR Parts 18 and 75
High-Voltage Continuous Mining Machines; Proposed Rule

DEPARTMENT OF LABOR

Mine Safety and Health Administration

30 CFR Parts 18 and 75

RIN 1219–AB34

High-Voltage Continuous Mining Machines

AGENCY: Mine Safety and Health Administration (MSHA), Labor.

ACTION: Proposed rule.

SUMMARY: The Mine Safety and Health Administration (MSHA/We) are proposing design requirements for approval of high-voltage continuous mining machines operating in face areas of underground mines. We are also proposing to establish new mandatory electrical safety standards for the installation, use, and maintenance of high-voltage continuous mining machines used in underground coal mines. These provisions would enable mines to utilize high-voltage continuous mining machines with enhanced safety protection from fire, explosion, and shock hazards. In addition to providing a mining environment as safe as when using low- and medium-voltage equipment and facilitating the use of advanced equipment designs, the proposed rules would eliminate the need for Petitions for Modification (PFMs) to use high-voltage continuous mining machines. Once promulgated, this rule will supercede existing provisions in granted PFMs.

DATES: Comments on the proposed rule must be received by September 14, 2004. Submit written comments on the information collection requirements by September 14, 2004.

Public hearing dates and locations are listed in the *Public Hearings* section below under **SUPPLEMENTARY INFORMATION**. If individuals or organizations wish to make an oral presentation for the record, we ask that you submit your request at least 5 days prior to the hearing dates. Post-hearing comments and other appropriate data for the record must be received by October 14, 2004.

ADDRESSES: You may submit comments, identified by RIN 1219–AB34, by any of the following methods:

- Federal eRulemaking Portal: *http://www.regulations.gov*.
- E-mail: *comments@MSHA.gov*. Include ''RIN 1219–AB34'' in the subject line of the message.
- Fax: 202–693–9441.
- Mail, Hand Delivery or Courier: MSHA, 1100 Wilson Blvd., Room 2350, Arlington, Virginia 22209–3939.

Instructions: All comments, including any personal information contained therein, will be posted without change to *http://www.msha.gov/currentcomments.htm*.

Docket: The entire rulemaking record may be viewed in MSHA's public reading room at 1100 Wilson Boulevard, Room 2349, Arlington, Virginia.

FOR FURTHER INFORMATION CONTACT: For information concerning the technical content of the rule, contact Elio L. Checca, General Engineer, Office of Technical Support, MSHA, 1100 Wilson Blvd, Room 2332, Arlington, Virginia 22209–3939. Mr. Checca can be reached at *Checca.elio@dol.gov* or 202–693–9471 (facsimile). For information concerning the rulemaking process, contact Marvin W. Nichols, Jr., Director, Office of Standards, Regulations, and Variances, MSHA, 1100 Wilson Boulevard, Room 2350, Arlington, Virginia 22209–3939. Mr. Nichols can be reached at *Nichols.marvin@dol.gov,* 202–693–9440 (telephone), or 202–693–9441 (facsimile).

You may obtain copies of the proposed rule and the Preliminary Regulatory Economic Analysis (PREA) in alternative formats by calling 202–693–9440. The alternative formats available are either a large print version of these documents or electronic files that can be sent to you either on a computer disk or as an attachment to an e-mail. The documents also are available on the Internet at *http://www.msha.gov/REGSINFO.HTM.* We intend to place the public comments on these documents on our Web site shortly after we receive them.

SUPPLEMENTARY INFORMATION:

I. Public Hearings

We will hold four public hearings on the proposed rule. The public hearings will be begin at 9 a.m., and will be held on the following dates and at the locations indicated.

Date	Location	Phone
September 21, 2004	Sheraton Birmingham 2101 Richard Arlington Jr., Blvd. North, Birmingham, AL 35203	(205) 324–5000
September 23, 2004	Sheraton Suites Lexington, 2601 Richmond Rd., Lexington, KY 40509	(859) 268–0060
September 28, 2004	Little America Hotel, 500 S. Main Street, Salt Lake City, UT 84101	(801) 363–6781
September 30, 2004	Hyatt Regency Pittsburgh Intl. Airport, 1111 Airport Blvd., Pittsburgh, PA 15231	(724) 899–1234

If individuals or organizations wish to make an oral presentation for the record, we ask that you submit your request at least 5 days prior to the hearing dates. However, you do not have to make a written request to speak. Any unallotted time will be made available for persons making same-day requests.

The hearings will begin with an opening statement from MSHA, followed by an opportunity for members of the public to make oral presentations to a panel. Speakers will speak in the order that they sign in. At the discretion of the presiding official, the time allocated to speakers for their presentation may be limited. Speakers and other attendees may also present information to the MSHA panel for inclusion in the rulemaking record.

The hearings will be conducted in an informal manner. The hearing panel may ask questions of speakers. Although formal rules of evidence or cross examination will not apply, the presiding official may exercise discretion to ensure the orderly progress of the hearing and may exclude irrelevant or unduly repetitious material and questions.

A verbatim transcript of the proceedings will be included in the rulemaking record. Copies of this transcript will be available to the public, and can be viewed at *http://www.msha.gov.*

MSHA will accept post-hearing written comments and other appropriate data for the record from any interested party, including those not presenting oral statements, up to 14 days after the last public hearing which is scheduled for September 30, 2004.

II. Information Collection Requirements

Comments concerning the information collection requirements must be clearly identified as such and sent to both the Office of Management and Budget (OMB) and MSHA as follows:

(1) To OMB: All comments may be sent by mail addressed to: Office of Information and Regulatory Affairs, Office of Management and Budget, New Executive Office Building, 725 17th Street, NW, Washington, DC 20503, Attn: Desk Officer for MSHA; and

(2) To MSHA: Comments must be clearly identified by RIN Number

[1219–AB34] as comments on the information collection requirements and transmitted by e-mail to *comments@msha.gov,* by internet to *www.Regulations.gov,* by facsimile to (202) 693–9441, or by regular mail or hand delivery to MSHA, Office of Standards, Regulations, and Variances, 1100 Wilson Blvd., Room 2350, Arlington, Virginia 22209–3939.

III. Background

A. Events Leading to Regulatory Action

The energy used by electrical equipment in mines has increased over the years. Voltage to operate this equipment has also increased to accommodate the increased energy demand. Additionally, high-voltage electric equipment design has become safer than in the past, more efficient, and practical. Because of the industry's need for higher voltages and the marked improvement in the design and manufacturing technology of high-voltage components, we promulgated the ''Electric Motor-Driven Mine Equipment and Accessories and High-Voltage Longwall Equipment Standards for Underground Coal Mines,'' 67 FR 10972 (March 11, 2002) (high-voltage longwall rule). These regulations and standards added a number of approval and safety requirements to Title 30 CFR parts 18 and 75 to accommodate advances in technology for high-voltage longwall equipment.

Since we promulgated the high-voltage longwall rule, the mining industry has been moving toward the use of high-voltage continuous mining machines to increase productivity. High-voltage continuous mining machines increase productivity with a minimal increase in machine size. Higher voltages also require less current, resulting in the use of smaller cables. Smaller cables are easier to handle, and can reduce injuries to miners.

Existing safety standard 30 CFR 75.1002, *Installation of electric equipment and conductors; permissibility,* does not allow mines to utilize high-voltage continuous mining machines in or inby the last open crosscut, within 150 feet of pillar workings, or on longwall faces. To allow mines to utilize high-voltage mining machines in the face area of a mine, we grant PFMs. The PFM process allows a mine operator to request modification of a safety standard at a particular mine pursuant to section 101(c) of the Federal Mine Safety and Health Act of 1977 (Mine Act). PFMs may be granted when a mine operator has an alternative method that provides the same measure of safety protection as the existing standard; or when the existing standard would result in diminished safety protection to miners. The PFM process results in safety requirements and procedures that are applicable only to an individual mine. Once a final written decision pertaining to a PFM has been issued, the governing terms and conditions contained in the decision become mandatory for the mine described in the petition. Following issuance of a final decision, we continue to monitor compliance with its terms and conditions.

PFMs granted to date for the use of high-voltage continuous mining machines contain requirements for proper installation, electrical and mechanical protection, cable handling, and disconnecting of circuits and equipment. We granted the first PFM for the use of continuous mining machines incorporating onboard high-voltage switching components in 1997. From 1997 through October 2003, we granted 38 PFMs for the use of high-voltage continuous mining machines, and others are being processed.

B. PFM Requirements in the Proposed Rule

In developing this proposed rule we reviewed the granted PFMs for § 75.1002 to allow the use of high-voltage continuous mining machines. Although the proposed rule includes most requirements that were in the granted PFMs allowing the use of high-voltage continuous mining machines, it does not include all of the requirements. The table below indicates which requirements in the granted petitions are also in the proposed rule.

TABLE 1.—COMPARISON OF REQUIREMENTS IN GRANTED PETITIONS FOR MODIFICATION (PFMS) WITH REQUIREMENTS IN THE PROPOSED RULE

Requirement in PFMs	Number of PFMs including requirement out of 38 PFMs	Requirement included in Proposed Rule
2,400 Volt limit for continuous mining machine	38	No.
120 Volt maximum control voltage	38	Yes.
Ground-fault protection	38	Yes.
Short-circuit protection	38	Yes.
Look ahead circuit	38	Yes.
Undervoltage protection	38	Yes.
Installation of trailing cables	38	Yes—expanded to allow unused entry.
Trailing cable temporary storage	15	Yes.
Guarding	38	Yes.
Guarding locations	38	Yes.
Suspended cables or cable crossovers	18 prohibit the use of crossovers; 19 permit crossovers; 1 does not address the use of crossovers.	Yes.
Cable design	38	Yes.
Maximum number of splices	37	No.
Prohibiting tape-type splices	38	No.
Qualified person to splice	38	Yes.
Trailing cable inspection	38 for daily inspection; 13 for inspection each shift.	Yes.
Main disconnect device in power center	38	Yes.
Trailing cable disconnecting devices	38	Yes.
Caution labels on HV compartments	38	Yes.
Grounding stick for capacitor storage devices	38	Yes.
Design, installation, and maintenance of disconnecting switches	38	Yes.
Main disconnecting devices and control circuit interlocking	38	Yes.
Cover interlocks	38	Yes—two required.

TABLE 1.—COMPARISON OF REQUIREMENTS IN GRANTED PETITIONS FOR MODIFICATION (PFMS) WITH REQUIREMENTS IN THE PROPOSED RULE—Continued

Requirement in PFMs	Number of PFMs including requirement out of 38 PFMs	Requirement included in Proposed Rule
Emergency stop switch	33	Yes.
Barrier and covers	38	Yes.
Troubleshooting and testing limitations	38	Yes.
Qualified person	38	Yes.
Ungrounded power circuits	38	Yes.
Ground-wire monitor test	38	Yes.
Power center lockout and tag procedures	38	Yes.
Trailing cable lockout and tag procedures	38	Yes.
Lockout and tagging responsibilities	38	Yes.
Ground-fault test	38	Yes.
Grounded-phase detector test	37	Yes.
Remove from service if a grounded-phase occurs	38	Yes.
Handling trailing cables	38	Yes.
Personal protective equipment made available by mine operator	34	Yes.
Visual examination of HV insulating gloves	38	Yes.
Air testing of gloves	38	Yes.
Voltage testing of gloves	38	Yes.
Power sources for tramming	15	Yes.
Training	38	No.

Those requirements in the petitions that were omitted from the proposed rule are as follows: limiting the operating voltage of the continuous mining machine; limiting the number of splices in a high-voltage trailing cable; prohibiting permanent tape-type splices; and training requirements for miners on the high-voltage continuous mining machine systems. The proposed rule does not limit the continuous mining machine voltage, originally specified by the manufacturer to 2,400 volts, because existing regulations in Part 18 allow for approval of equipment up to 4,160 volts. The proposed rule, like the high-voltage longwall rule, has technical provisions to test and evaluate equipment containing on-board switching of high-voltage components up to 4,160 volts. Therefore, we believe that limiting the maximum operating voltage of continuous mining machines to 2,400 volts would unnecessarily restrict the design, and have written the proposed rule to allow for approval of equipment with operating voltages up to 4,160 volts.

The proposed rule does not include a limit in the number of splices in a high-voltage trailing cable because we could find no data to support quantifying a maximum number. The design features of the high-voltage cables combined with the sensitive ground-fault protection of the circuit will dictate increased vigilance in the protection and maintenance of the high-voltage cables. Our experience has shown that as a splice is added to a high-voltage trailing cable, leakage current may flow between the phase conductors and the shielding and grounding conductors in the splice. These leakage currents would occur inside the splice, and would not pose a shock hazard to miners. As additional splices are added, the summation of these currents will activate the sensitive ground-fault protection and prevent the continuous mining machine from operating.

Additionally, while we prohibited the use of permanent tape-type splices under the petitions, we do not prohibit such use in this proposed rule. Tape-type splices can be used to make an effective splice when proper procedures are followed. Our concern with allowing them had been that the splice materials were often used improperly, and this allowed moisture to enter the splice. Moisture would then degrade the insulation and ultimately create a shock hazard. Instead of prohibiting all tape-type splices, we are proposing that all splices be made with an MSHA-approved splice kit. The approved kits contain materials and instructions on the proper methods for making a splice. The kit includes tape that is self-vulcanizing so it will exclude moisture when applied as instructed, thereby preventing a shock hazard.

Finally, the PFMs required certain safety training that is already required by 30 CFR part 48, and, therefore was duplicative. Specifically, all miners who perform maintenance on high-voltage continuous mining machines are to be trained in high-voltage safety, testing, and maintenance procedures. Also, all personnel who work in the proximity of the high-voltage continuous mining machine or who move high-voltage equipment or cables are to be trained in high-voltage safety procedures. These requirements are not incorporated into the proposed rule since they are already required under existing 30 CFR part 48.

IV. Discussion of the Proposed Rule

A. General Discussion—Part 18 Electric Motor-Driven Mine Equipment and Accessories

We are proposing to add specific design requirements for high-voltage continuous mining machines used in face areas and pillar workings of underground mines for manufacturers to follow to obtain our approval. The proposed additional requirements would allow high-voltage switchgear with enhanced safety protection from fire, explosion and shock hazards to be used on high-voltage continuous mining machines. The proposed changes would accomplish several purposes. They would improve the design requirements for continuous mining machines consistent with existing requirements in 30 CFR part 18, accommodate new design technology that is practical, and lessen burdens on the mining community while preserving safety and health protection for miners.

The main safety protections addressed in this proposed rule, like the high-voltage longwall rule, are summarized into four areas: (1) Prevention of a high-voltage arc from occurring; (2) prevention of the resulting heat or flame from igniting a methane-air mixture surrounding the machine if an arc or methane explosion occurs within the explosion-proof enclosure; (3) prevention of enclosure failure from an increased pressure rise if an arc or methane explosion occurs within the explosion-proof enclosure; and (4)

personal protection for miners from electrical shock hazards when working with or around the high-voltage equipment.

This proposed rule addresses only those provisions of 30 CFR part 18 for approval of continuous mining machines with onboard high-voltage switching of high-voltage components. Several of these proposed provisions are either new or derived from existing part 18 requirements. However, we are also proposing a number of requirements identical to existing § 18.53 provisions for longwall mining systems that also apply to high-voltage continuous mining machines. We have chosen to organize the rule so that the requirements for approval of continuous mining machine systems remain separate from those of longwall systems. We invite comments on whether we should reorganize §§ 18.53 and 18.54 to combine them or reorganize them in some other way in the final rule.

We are proposing this approval rule (30 CFR part 18) in conjunction with mandatory safety standards for high-voltage continuous mining machines (30 CFR part 75).

B. General Discussion—Part 75 High-Voltage Continuous Mining Machine Safety Standards

We have evaluated the safety of high-voltage continuous mining machines used in underground coal mines for approximately six years. Through the petition process that allows a mine operator to request modification of a safety standard at a particular mine, we have performed specific on-site investigations for all petitions granted for the use of high-voltage continuous mining machines. We have verified that safety concerns of explosion, fire, and shock hazards associated with the use of high-voltage have been sufficiently addressed by advances in the high-voltage technology. For example, we have recognized that high-voltage electric equipment and circuit design improvements in combination with sensitive electrical circuit protections reduce the potential for fire, explosion and shock hazards. We have noted the availability of lighter power cables that reduce back strain and other injury risks to miners often associated with moving, lifting, or hauling the heavier lower voltage cables. Moreover, to our knowledge, there have been no electrical fatalities resulting from using high-voltage equipment under granted petitions. Our evaluation reveals that high-voltage continuous mining machines can be safely used, provided certain conditions are met.

Accordingly, we are proposing to revise the existing 30 CFR part 75 electrical safety standards to permit the use of high-voltage continuous mining machines. We have included new safety provisions, as well as almost all the basic provisions from granted petitions relative to the proper installation, electrical and mechanical protection, handling, and procedures for disconnecting circuits and equipment.

This proposed rule would not reduce the protection afforded by existing 30 CFR part 75 standards. Rather, it would provide increased protection from electrical, fire, and other hazards. We are proposing revisions to part 75 in conjunction with proposed revisions to 30 CFR part 18 that would address approval requirements for high-voltage continuous mining machines.

C. Plain English

We have attempted to write this proposed rule and preamble so that it is clear and understandable. In addition to the specific comments we are requesting throughout this preamble including those above concerning proposed § 18.54, we invite comments on how to make the entire rule easier to understand. For example:

1. Have we organized the material to suit your needs? If not, how could the material be better organized?
2. Do we clearly state the requirements in the rule? If not, how could the rule be more clearly stated?
3. Is the technical language clear? If not, what language requires clarification?
4. Would a different format (grouping or order of sections, use of headings, paragraphing) make the rule easier to understand? If so, what changes to the format would make the rule easier to understand?

D. Section-by-Section Discussion

Part 18 Electric Motor-Driven Mine Equipment and Accessories

Section 18.54 High-Voltage Continuous Mining Machines

(a) Separation of High-Voltage Components From Lower Voltage Components

Proposed paragraph (a) of this section was derived from existing § 18.53(a). The existing requirements for high-voltage longwall equipment are contained in § 18.53, High-voltage longwall mining systems. It would require separation of low- and medium-voltage circuits from those with high-voltage circuits in each motor-starter enclosure, by separate compartments, barriers, or partitions. Barriers and partitions, under this proposed rule, like the high-voltage longwall rule, would have to be constructed of grounded metal or nonconductive insulating board. When designing the barriers or partitions, consideration should be given to possible effects of pressure-piling within the enclosure due to restricted configurations within enclosures. Such restrictions can cause an accelerated rate of burning of a methane-air mixture that can create abnormal pressures within the enclosure. This extreme pressure can cause the enclosure to fail and possibly ignite methane gas or coal dust surrounding the enclosure, thereby putting miners at risk. The proper design of enclosures, including placement of barriers and partitions can limit the damaging effects from pressure piling. Under this proposed rule, barriers, partitions, or separate compartments must be provided between high-voltage and lower-voltage compartments to protect persons from coming into contact with energized high-voltage conductors or parts such as when testing and troubleshooting low- and medium-voltage circuits on the continuous mining machine.

(b) Interlock Switches

Proposed paragraph (b) of § 18.54 would require covers or removable barriers or partitions of motor-starter enclosure compartment(s) containing high-voltage components to be provided with at least 2 interlock switches. Proposed paragraph (b) is derived from existing § 18.53(b) with the addition of the word ''removable'' to clarify that interlock switches would not be required on permanently installed barriers, or partitions. Interlock switches protect miners entering enclosures from shock hazards by de-energizing high-voltage circuits when these barriers, partitions, or covers are removed. Like the high-voltage longwall rule, a minimum of two interlock switches per cover would be required and must be wired into the circuitry so that operating either switch would de-energize the incoming high-voltage circuits to that enclosure.

(c) Circuit-Interrupting Devices

Proposed paragraph (c) of § 18.54 is derived from the requirements in the granted PFMs for the use of high-voltage continuous mining machines and is identical to § 18.53(c). It would require that circuit-interrupting devices be designed and installed to prevent automatic reclosure. This provision would protect against shock, fire, and explosion hazards. For example, if a roof fall or equipment insulation failure

were to result in a short-circuit or ground-fault condition, the automatic reclosing of circuit-interrupting devices would re-energize the circuit and could create a hazard to miners.

(d) Transformers Supplying Control Voltages

Proposed paragraph (d) is primarily derived from existing § 18.53(d), but incorporates changes based on our experience in enforcing that provision. The proposed changes would clarify the grounding requirements of the electrostatic shield for various transformer designs.

Proposed paragraph (d)(1) of this section would require that the nominal control voltage of alternating-current circuits not exceed 120 volts line-to-line. This requirement would allow any appropriate control circuit wiring configuration of 120 volts line-to-line or less to exist, and would be consistent with the high-voltage longwall rule and granted petitions for high-voltage continuous mining machines. Limiting the control voltages to 120 volt, line-to-line will reduce the potential for electrocution hazards to miners.

Proposed paragraph (d)(2) specifies that control transformers with high-voltage primary windings that are located in each high-voltage motor-starter enclosure or that supply control power to multiple motor-starter enclosures, have an electrostatic (Faraday) shield installed between the primary and secondary windings. After the high-voltage longwall rule was promulgated, we became aware of the different control transformer designs which affect how electrostatic shields are grounded. Proposed paragraphs (d)(2)(i) and (ii) address those different grounding methods.

The purpose of the electrostatic shields is to provide isolation between the high-voltage and lower-voltage circuit(s). This isolation would protect miners against high-voltage shock hazards should a fault develop between the primary and secondary windings. Electrostatic shielding would also prevent transients (sudden short term changes in voltage and current) occurring on the primary circuit from being transferred to the secondary circuit. Such transients could cause premature damage to electrical and electronic control equipment and create an economic burden for the mining industry.

Grounding of the electrostatic shield would be dependent on the design of the transformer. If a transformer is designed with an external grounding terminal, proposed paragraph (d)(2)(i) would require the shield to be connected to the equipment ground by a minimum of a No. 12 American Wire Gauge (A.W.G.) grounding conductor extending from the external grounding terminal. This minimum wire size requirement is intended to ensure proper current carrying capacity and mechanical strength of the grounding conductor.

Proposed paragraph (d)(2)(ii) would require that if the transformer is designed without an external terminal, the electrostatic shield would have to be connected to the transformer frame by an internal conductor. This conductor, installed when the transformer was manufactured, would be considered an extension of the shield, and therefore, could be smaller than a No. 12 A.W.G. In this case, bolting of the transformer frame to the equipment enclosure would provide the required path to ground, as long as an effective low impedance electrical connection is maintained.

(e) Onboard Ungrounded, Three-Phase Power Circuit

The provisions of proposed paragraph (e) of this section are derived from the granted PFMs for the use of high-voltage continuous mining machines. Proposed paragraph (e) would require a grounded-phase indicator light when three-phase, ungrounded power circuits are used onboard the continuous mining machine. These circuits include high-voltage transformers on-board the machine to power low- and medium-voltage circuits. The secondary windings of these transformers are connected in an ungrounded configuration. The purpose of requiring an indicator light would be to detect or alert the operator to grounded-phase conditions in the ungrounded circuits. With ungrounded systems, the capacitive coupling between each phase conductor and ground can subject the ungrounded system to dangerous overvoltages resulting from intermittent ground faults. The occurrence of a second grounded-phase would create a short-circuit and possible arcing between components. This could result in a methane-air explosion that could result in catastrophic failure of the enclosure or cause a shock hazard to miners. Therefore, it is important to detect and immediately correct any grounded-phase condition to prevent a hazard. Paragraphs (e)(1) through (e)(3) address these concerns.

Proposed paragraph (e)(1) would require an on-board grounded-phase indicator light to alert the machine operator if a grounded-phase condition were to occur on any ungrounded, three-phase power circuit.

Proposed paragraph (e)(2) would require the indicator light to be installed so that the machine operator could readily observe it from any location where the continuous mining machine is normally operated.

Proposed paragraph (e)(3) would require that the onboard ungrounded, three-phase power circuit contain a test circuit to verify the integrity and proper operation of the grounded-phase detection circuit. Also, the test circuit must be designed so that (1) the designated person would not have to remove the electrical enclosure covers to activate it; and (2) it would not create a double-phase-to-ground fault resulting in a short-circuit condition. We note that such a design already exists, as we have seen equipment where a readily accessible test switch was used to activate the test circuit and not require the removal of electric enclosure covers. This design would minimize hazards to personnel by making the test easier to use and avoid placing personnel in close proximity to exposed, energized conductors, thereby minimizing the potential for shock hazards.

(f) High-Voltage Trailing Cable(s)

Proposed paragraph (f) would address high-voltage trailing cables, and is derived from: the granted PFMs for the use of high-voltage continuous mining machines; proposed § 75.826; existing §§ 18.35 and 18.47; and Insulated Cable Engineer's Standards (ICEA)S–75–381/ National Electrical Manufacturer's Association (NEMA) Standard NEMA WC 58–1997. The proposed rule incorporates by reference the current carrying capacity (ampacity) ratings and outside diameter requirements for trailing cables listed in the ICEA/NEMA Standard. This requirement would standardize the ampacity and outer diameter of cables to prevent overheating and ensure the interchangeability of trailing cables provided by different manufacturers. In accordance with the requirements for incorporating by reference, proposed paragraph (f) details how the public may inspect or purchase a copy of the incorporated standard and notes that according to his/her statutory authorization, the Director of the Federal Register has approved the incorporation by reference.

Existing § 18.35 contains general requirements, such as minimum conductor size, maximum cable length, flame resistance, etc., for trailing cables. Existing § 18.47(d)(5) addressing voltage limitations of trailing cables requires cables to include grounding conductors, a ground check conductor, and grounded metallic shields around each

power conductor. Proposed paragraphs (f)(1), (f)(2), (f)(3), and (f)(4) would specify requirements applicable to trailing cables for high-voltage continuous mining machines.

Specifically, proposed paragraph (f)(1) would require trailing cables to be constructed to include 100 percent semi-conductive tape shielding over each insulated power conductor. Proposed paragraph (f)(2) would require a grounded metallic braid shielding over each power conductor. The 100 percent semi-conductive tape shielding material and grounded metallic shield around each power conductor would protect miners from shock and electrocution hazards. Also, the combination of the tape and shielding requirements would prevent voltage stresses on the conductor insulation. The shielding maintains a symmetrical distribution of voltage stresses. This is critical at higher operating voltages. Shielding also prevents transients on power systems and reduces the hazard of electric shocks.

Proposed paragraph (f)(3) of this section would require that the cable include either a ground check conductor not smaller than a No. 10 A.W.G. or a center ground-check conductor not smaller than a No. 16 A.W.G. stranded conductor. Cables designed with a center ground-check conductor do not need to have the size of the ground-check conductor as large as a ground-check conductor located on an interstice of the cable since the conductor would be exposed to less mechanical stress and damage. Therefore, a No. 16 A.W.G. ground-check conductor would be adequate. Such designs have been used in high-voltage longwall applications for several years, and are currently permitted under existing § 75.822.

Proposed paragraph (f)(4) of this section is based on language contained in granted PFMs for the use of high-voltage continuous mining machines. It would require the use of two reinforced layers of jacket material. Under this construction, the inner-most layer of two-layered protective cable jacket would be required to be a color distinctive from the outer jacket color. This requirement would also complement the inspections required in proposed § 75.832(d) since the purpose would be to allow for easy recognition of damage to the jacket. The provision would not permit the color black to be used for either layer since it would be hard to identify damaged areas.

(g) Safeguards Against Corona

Proposed paragraph (g) of § 18.54 is identical to existing § 18.53(k). Proposed paragraph (g) would require a manufacturer to provide safeguards against corona on all 4,160 volt circuits in explosion-proof enclosures. Corona is a luminous discharge that occurs around electric conductors that are subject to high electric stresses. Corona can cause premature breakdown of insulating materials in explosion-proof enclosures onboard the high-voltage continuous mining machine. This could result in arcing and possibly create an explosion hazard. Although corona usually does not present a hazard until a voltage of 8kV is reached, safeguards should be taken at 4,160 volts. Safeguards would include using cables with a corona resistant insulation such as ethylene propylene to avoid small nicks or cuts in the cable insulation and to minimize high-voltage transients. As with the high-voltage longwall rule, this provision is not intended to require stress cones or similar termination schemes to prevent corona.

(h) Explosion-Proof Enclosure Design

Proposed paragraph (h) of this section is identical to existing § 18.53(l). It would require limiting the maximum explosion pressure rise within an enclosure to 0.83 times the design pressure for any explosion-proof enclosure containing high-voltage switchgear. This requirement would protect against explosion hazards that may arise from the effects of a sustained high-voltage arcing fault. Arcing faults may significantly contribute to a pressure rise in an explosion-proof enclosure during an internal methane-air explosion. A pressure rise above the design limit of the enclosure could cause the explosion-proof enclosure to fail to contain the methane explosion.

(i) Location of High-Voltage Electrical Components Near Flamepaths

Proposed paragraph (i) is identical to existing § 18.53(m). It would require that high-voltage electrical components located in high-voltage explosion-proof enclosures not be coplanar with a single-plane flame-arresting path. This protective measure would prevent the heat or flame (from an arc or methane explosion in an explosion-proof enclosure) from igniting a methane-air mixture surrounding the enclosure. This requirement would prevent the possibility of conductor material particles from being expelled from the enclosure through the flame-arresting path. Particles of molten material are emitted from the conductors whenever an arcing short-circuit occurs in an explosion-proof enclosure. Expulsion of these particles from the enclosure can occur if their source is in the same plane as the flame-arresting path and a pressure rise coincides with the short circuit. Once these particles are expelled from the explosion-proof enclosure, they can ignite an explosive atmosphere should one be present. This possibility would not arise with multi-plane flame-arresting path surfaces because a deflection in the path would prevent ignitions by expelled particles.

(j) Minimum Creepage Distances

Proposed paragraph (j) of § 18.54, including the table for minimum creepage distances, is identical to existing § 18.53(n). Proposed paragraph (j) would require that rigid insulation between high-voltage terminals or between high-voltage terminals and ground be designed with creepage distances in accordance with the minimum creepage distance table proposed in this section. The minimum creepage distances specified would provide adequate insulation to prevent a phase-to-phase or phase-to-ground fault that could cause a possible explosion. The required creepage distances are determined based upon the phase-to-phase use voltage and the Comparative Tracking Index (CTI) of the insulation to be used. An appropriate method of determining the CTI of the electrical insulating material is described in the American Society for Testing and Materials Standard, ASTM D3638 ''Standard Test Method for Comparative Tracking Index of Electrical Insulating Materials.'' The MSHA derived creepage distances in the table are consistent with most commercially available high-voltage components to which this provision would apply.

(k) Minimum Free Distances

Proposed paragraph (k) of § 18.54, including the table discussing Minimum Free Distances (MFDs), is identical to existing § 18.53(o). It would address a requirement for MFDs within an explosion-proof motor-starter enclosure. During development of the high-voltage longwall rule, we determined that if phase-to-phase arcing occurred, there might be sufficient arc energy to heat the walls of the enclosure beyond the safe design temperature. This could cause failure of the enclosure and create an explosion hazard if the MFDs are below what is specified in the table. Consequently, distances between the wall or cover of an enclosure and uninsulated electrical conductors inside the enclosure were established to prevent wall or cover damage that may result from phase-to-phase arcing.

Under proposed paragraph (k)(1), we would allow for values not specified in the MFD table provided they meet the

specific engineering formulas on which the table is based. These formulas are adopted from existing § 18.53. Under proposed paragraph (k)(2), we would require the minimum free distance values in the table or those values calculated using the prescribed formula to be increased by an incremental amount based on the system voltage. The minimum free distance must be increased by 1.5 inches for 4160 volt systems and by 0.7 inches for 2400 volt systems when the adjacent wall area is at the top of the enclosure. This increase in distance is necessary to account for the thermal effects caused from the arc, due to heat rising within the enclosure. Under this proposed paragraph we would also consider the use of steel shields in conjunction with an aluminum wall or cover. Under these circumstances, the thickness of the steel shield would be used to determine the minimum free distance.

Additionally, we would consider the use of alternate techniques and methods, as permitted by § 18.47(d)(6), that preclude the possibility of high-energy arcs that would heat the walls of explosion-proof enclosures beyond safe temperatures. If upon evaluation, equivalent safety were demonstrated, we would accept these technological advances and the results of additional research in this area.

(l) Static Pressure Testing of Explosion-Proof Enclosures Containing High-Voltage Switchgear

Proposed paragraph (l) of this section is derived from existing § 18.53(p). Proposed paragraph (l)(1) would require that prior to performing explosion tests required under existing § 18.62, the manufacturer must perform a static pressure test as detailed in proposed paragraph (l)(1)(i) on each prototype design of explosion-proof enclosure housing high-voltage switchgear and the enclosure meet acceptable performance criteria as specified in proposed paragraph (l)(1)(ii).

Proposed paragraph (l)(1)(i) describes the prototype static test procedure and specifies that the enclosure be internally pressurized to a pressure no less than the design pressure, with the pressure maintained for a minimum of 10 seconds. The pressure is then released and the pressurizing agent removed from the enclosure. We have developed the static pressure test with its acceptable performance criteria to ensure each enclosure design would be capable of withstanding its design pressure. By requiring static pressure testing on each prototype enclosure, we believe that the adequacy of enclosure design would be verified.

Proposed paragraph (l)(1)(ii) specifies the acceptable performance criteria that enclosures undergoing the prototype static pressure test must satisfy. Acceptable performance would be achieved if the enclosure, during pressurization, did not result in the rupture of any part that would affect the integrity of the explosion-proof enclosure or cause leakage through welds or castings. Further, the provision would require that following removal of the pressurizing agents, the enclosure would not exhibit visible cracks in welds, permanent deformation exceeding 0.040 inches per linear foot; or excessive clearances along flame-arresting paths following retightening of fastenings, as necessary. Any of these conditions would constitute unacceptable performance because they would indicate that the explosion-proof integrity of the enclosure has been compromised.

Proposed paragraph (l)(2) would require the manufacturer of every explosion-proof enclosure housing high-voltage switchgear to either conduct the static pressure test for each manufactured unit or follow an MSHA-accepted quality assurance procedure covering the inspection of the enclosure. These procedures are typically required by nationally recognized quality systems certification organizations. The purpose of the quality assurance procedures would be to verify that the manufactured enclosure meets the design specifications of the original enclosure tested.

Part 75—Mandatory Safety Standards—Underground Coal Mines

Section 75.823 Scope

Proposed § 75.823 describes the scope of this proposed rule. Proposed §§ 75.824 through 75.833 are electrical standards that would apply only to the use of high-voltage continuous mining machines. Proposed § 75.823 also specifies that under this rule a ''qualified person'' means a person qualified under existing § 75.153; *Electrical work; qualified person.* This requirement is derived from existing § 75.820(a), and is included in the scope to prevent repetition of this requirement. Consequently, any reference in this proposed rule to electrical work on circuits and equipment associated with high-voltage continuous mining machines would need to be performed by persons qualified in accordance with § 75.153. This electrical work includes all circuits and equipment, not just high-voltage.

Also, this proposed rule is similar to the high-voltage longwall rule in that non-qualified persons working under the direct supervision of a qualified person would not be permitted to do electrical work, even when directly supervised by a qualified person. We believe that when a person is qualified to perform electrical work on low-, medium-, and high-voltage circuits, he is able to identify hazards and follow safe work procedures. Therefore, only qualified persons would be permitted to work on circuits associated with high-voltage continuous mining machines. This requirement is intended to prevent electrical accidents.

Other standards in 30 CFR would also apply to this equipment, where appropriate. For example, safety standards, such as grounding and ground-monitor requirements contained in subparts H and I of part 75 that are currently applicable to high-voltage installations are also applicable to high-voltage continuous mining machines. However, §§ 75.813 through 75.822 apply only to high-voltage longwalls. Additionally, once promulgated, this rule will supercede existing provisions from granted PFMs.

Section 75.824 Electrical Protection

Proposed § 75.824, with the exception of paragraph (a)(2)(ii), is derived from the granted PFMs for the use of high-voltage continuous mining machines. Proposed § 75.824 addresses electrical protection for high-voltage continuous mining machines. The effects of ground faults, overloads, electrical arcing, heating of conductors, and short circuits can have adverse consequences to the safety of miners. Effective electrical protection for continuous mining machines would reduce the potential for ignitions, fires, and miner exposure to energized equipment frames. The proposed rule would provide increased miner protection by incorporating the latest technology when using high-voltage continuous mining machines.

(a) Trailing Cable Protection

Proposed paragraph (a) of § 75.824 would require that a circuit-interrupting device have adequate interrupting capacity and be rated for the maximum voltage of the circuit in which it is used. The device would be part of the short-circuit, overload, ground-fault, and undervoltage protection for the trailing cable and the mining machine.

The purpose of requiring that the circuit-interrupting device be properly rated is to safely interrupt any circuit current in which it is intended to be used without damage to itself. The circuit-interrupting device must have a voltage rating that would ensure that the device would remain undamaged when

subjected to the maximum voltage of the system. Short-circuit and overload protection prevent damage to cables and motors due to arcing and overheating, and, therefore, minimize the risk of ignition and fire hazards to miners. Ground-fault protection minimizes the risk of shock and electrocution hazards to miners. Undervoltage protective devices prevent automatic restarting of equipment following a loss of power. This would prevent the inadvertent movement of machinery that can place miners at risk.

(1) Short-Circuit Protection

Proposed paragraph (a)(1)(i) would specify a current setting for a short-circuit protective device. The device, located in the power center, would be required to be set at the lower value of either the setting specified in approval documentation pertaining to the continuous mining machine or 75 percent of the minimum available phase-to-phase short-circuit current at the continuous mining machine. The short-circuit current settings specified in our approval documentation are based on the design of the continuous mining machine. As equipment is used and moved from one location to another in a mine, changes may take place in the electrical system which require an adjustment to the short-circuit protective device setting.

Proposed paragraph (a)(1)(ii) would allow the short-circuit device protecting the cable extending from the power center to the continuous mining machine to have an intentional time delay. The short-circuit protective device located in the power center would be required to have the lower value of either the time delay setting specified in the approval documentation or up to 0.05 seconds.

The purpose of permitting a time delay is to eliminate nuisance tripping during motor starting. When high-voltage longwalls were introduced to the mining industry, nuisance tripping problems were experienced. This nuisance tripping was caused by motor starting currents. To solve these problems, it was necessary to incorporate time delays into the short-circuit protective devices. Currently, electronic relays that are commonly used to provide short-circuit protection for high-voltage continuous mining machine circuits are designed with inherent time delay to override motor starting currents.

(2) Ground-Fault Protection

Proposed paragraph (a)(2) of § 75.824 would require ground-fault protection for the trailing cable extending from the power center to the continuous mining machine. Proposed paragraph (a)(2)(i) would require ground-fault currents to be limited by a neutral grounding resistor to not more than 0.5 ampere. Neutral grounding resistors are used in resistance grounded systems to limit the level of ground fault current in a circuit. The use of a 0.5 ampere neutral grounding resistor in conjunction with the ground-fault devices specified in the proposed standard would reduce the potential for shock hazards and prevent the neutral grounding resistor from overheating and becoming a fire hazard.

Proposed paragraph (a)(2)(ii) would require the trailing cable extending to the continuous mining machine to be protected by a ground-fault device set at not more than 0.125 ampere. The 0.125 ampere limit is based on the fact that sensitive ground-fault devices are commercially available and have been successfully used to detect ground-fault currents in circuits with extremely large values of motor starting current. The ground-fault device would have to operate within 0.050 second when exposed to 0.125 or more ampere. The purpose of permitting a time-delay is to prevent nuisance tripping during motor starting. The proposed time-delay requirement of paragraph (a)(2)(ii) is new.

The granted PFMs require instantaneous ground-fault protection, and do not allow for any time delay. However, with higher inrush currents, the lower settings of the relay may cause the circuit to open during motor starting.

Proposed paragraph (a)(2)(iii) of § 75.824 would require an impedance-measuring ''look-ahead'' circuit to detect a ground-fault condition and prevent the closing of a circuit-interrupting device when a ground-fault exists in a circuit. The practice of repeatedly closing the circuit-interrupting device with a fault present can cause the circuit-interrupting device insulation to fail and cause the device to explode. This requirement is intended to reduce possible injury to miners from such potential explosion.

Proposed paragraph (a)(2)(iv) of § 75.824 would require that a high-voltage circuit extending from the power center to the continuous mining machine have back-up ground-fault protection to detect an open neutral grounding resistor. The back-up ground-fault protective device can be a combination of a potential transformer and voltage relay, or any other device capable of detecting an open neutral grounding resistor. Once an open neutral grounding resistor is detected, the back-up device must cause the circuit extending from the power center to the continuous mining machine to be de-energized. The 40 percent trip level would provide a safety factor to ensure that unexpected lower levels of ground-fault current would be detected and cause the circuit-interrupting device to open. Additionally, the back-up device must have a time-delay setting of not more than 0.25 second. The time-delay setting would be low enough to ensure quick de-energization of the circuit when the neutral resistor opens and a ground-fault exists, while allowing for selective tripping with the ground-fault protective device of the trailing cable.

Proposed paragraph (a)(2)(v) of § 75.824 would require thermal protection for the high-voltage neutral grounding resistor that would open the ground-wire monitor for the high-voltage circuit supplying the power center if the neutral grounding resistor is subjected to high-temperature resulting from a sustained ground-fault current. Thermal protection could include current transformers and thermal relays or any other devices, such as thermostats that sense overtemperature. The thermal device must not depend on control power because a loss of control power could prevent the detection devices from operating. The overtemperature rating or setting of the device would be the lower value of either 50 percent of the maximum temperature rise of the neutral grounding resistor or 302° F (150° C).

A thermal device is an added safety feature which would cause interruption of the high-voltage circuit supplying the power center by opening the ground-wire monitor circuit before sustained extreme heat causes the neutral grounding resistor to fail in the open mode. Failure of the resistor could leave the circuit unprotected against ground faults and would increase the possibility of fire and shock hazards. The proposed overtemperature setting requirement would ensure that the affected circuit is quickly de-energized under a sustained fault. Our experience has been that the settings specified would be high enough to prevent nuisance tripping.

Proposed paragraph (a)(2)(vi) of § 75.824 would require a single window-type current transformer to encircle the three-phase conductors for ground-fault protection. It would also prohibit the equipment grounding conductors from being passed through the ground-fault current transformer. This configuration would be prohibited because it would defeat ground-fault protection and result in hazardous voltage on equipment frames. Using the single-window type current transformer

in conjunction with a ground-fault relay would ensure sensitive ground-fault protection for circuits extending from the power center to the continuous mining machine.

Proposed paragraph (a)(2)(vii) would require a ground-fault test circuit for each ground-fault device specified in proposed paragraph (a)(2)(ii) of this section. This test circuit would be required to inject a current of 50 percent or less of the current rating of the neutral grounding resistor to verify that a ground-fault condition will cause the corresponding circuit-interrupting device to open. This test procedure would help determine if ground-fault devices function at required current levels. It would also test the sensitivity of each device to ground fault currents.

(3) Undervoltage Protection

Proposed paragraph (a)(3) of this section would require that the undervoltage device operate on a loss of voltage, de-energize the circuit, and prevent the equipment from automatically restarting. This provision is performance oriented. It would permit any undervoltage protective device that operates on loss of voltage and which prevents the automatic closing of the circuit-interrupting device upon restoration of power, to be used. This requirement is intended to reduce the likelihood that miners will be pinned or crushed due to the automatic restarting of the equipment upon restoration of power.

(b) Reclosing

Proposed paragraph (b) of § 75.824 would prohibit the use of circuit-interrupting devices that automatically reclose after opening. Automatic reclosure of the circuit-interrupting device would allow a circuit that has sustained a fault to re-energize. Typically, faults occur in trailing cables as a result of damage from roof falls or equipment. Under such circumstances, the use of automatic reclosing circuit-interrupting devices could create shock and fire hazards if the devices were designed to automatically reclose when a short-circuit or ground-fault condition exists in the circuit.

(c) Onboard Power Circuits

Proposed paragraph (c) of § 75.824 would require a mine operator to implement certain procedures if a grounded-phase indicator light was provided on a high-voltage continuous mining machine, and it indicated a grounded-phase condition.

The purpose of proposed paragraph (c) would be to warn miners of a grounded-phase condition. With ungrounded systems, the capacitive coupling between each phase conductor and ground can subject the ungrounded system to dangerous overvoltages from intermittent ground faults which can lead to insulation failure. Insulation failure can lead to another phase-to-ground failure. When two phases are grounded, a double-phase-to-ground or short-circuit condition will occur. High fault current will travel through the continuous mining machine frame creating possible shock and arcing hazards. The indication of a grounded-phase condition and subsequent repair of the equipment would reduce shock hazards to miners and eliminate any arcing ground-fault which can be an ignition source for methane. Therefore, it is important to detect and correct any grounded-phase condition.

Proposed paragraphs (c)(1) and (2) of this section set out safe procedures to be followed when locating and correcting a grounded-phase condition. Proposed paragraph (c)(1) requires that once the grounded-phase indicator light on the high-voltage continuous mining machine shows that a grounded-phase fault has occurred, the mining machine must be immediately moved to an area where the roof is supported. Proposed paragraph (c)(2) requires that once a grounded-phase fault has occurred, the machine not be placed into operation until the grounded-phase condition is corrected or the machine be taken out of service. The intent of proposed paragraph (c)(1) is to minimize miners' exposure to roof falls while the equipment is being repaired. The intent of proposed paragraph (c)(2) is to protect the miners from shock hazards.

Section 75.825 Power Centers

Except for paragraph (f), each paragraph in this proposed section is derived from granted PFMs for the use of high-voltage continuous mining machines. This section proposes requirements for power centers supplying high-voltage continuous mining machines. The proposed rule addresses disconnecting switches and devices, barriers and covers, interlocks, emergency stop switches, grounding sticks, and caution labels. Compliance with these requirements will prevent shock, fire, and explosion hazards.

(a) Main Disconnecting Switch

Proposed paragraph (a) of this section would require a main disconnecting switch in the power center. The purpose of the main disconnecting switch is to de-energize the primary windings of all power transformers in the power center when the switch is open, except for the control power transformer(s) and feed-through circuit(s). This will provide a safe means of de-energizing power when performing electrical work.

(b) Trailing Cable Disconnecting Devices

Proposed paragraph (b) would require a disconnecting device for each high-voltage output used to power the continuous mining machine. Disconnecting devices in power centers facilitate the de-energization process prior to performing electrical work. Traditionally, we have accepted either a disconnecting switch or cable coupler to satisfy lock-out and tagging requirements. This proposed paragraph would ensure that disconnecting devices are available for lock-out and tagging purposes as required in proposed § 75.831 to avoid exposing miners to electrical shock hazards.

(c) Disconnecting Switches

Paragraphs (c)(1) and (c)(2) of this section would require each disconnecting switch to have voltage and current ratings compatible with the circuits in which they are used. This requirement would prevent insulation failure and overheating resulting from using improperly rated switches. Therefore, this requirement would ensure that these switches would not create a shock or fire hazard to miners.

Paragraph (c)(3) of this section would require that the disconnecting switch be designed and installed so that one could see, without removing any covers, that the contacts of the device are open when the switch is in the ''open'' position. The removal of any cover to verify that the contacts are open could expose personnel to energized high-voltage circuits and could increase the potential for shock hazard.

Proposed paragraph (c)(4) would require the disconnecting switch to ground all power conductors on the ''load'' side of the switch when it is ''open and grounded.'' This requirement would ensure discharging of any existing voltage caused by capacitance between the power conductors and ground. It would also ensure that work can safely be performed on the electric circuits and equipment. Grounding the circuit would prevent shock hazards to miners working on the trailing cable or continuous mining machine.

Proposed paragraph (c)(5) would require that each disconnecting switch be designed so that it can only be locked in the ''open and grounded'' position. The switch must not have the ability to be locked in the closed position because it could delay opening the switch during an emergency. This provision in conjunction with proposed § 75.831

would ensure that the circuit remains de-energized until work is completed.

Proposed paragraph (c)(6) would require a disconnecting switch to be capable of interrupting the full-load current without causing damage to itself and thereby creating hazardous conditions. Using a switch that is not capable of interrupting the full-load current could result in its destruction and in injuries to miners from flash burns or flying parts. If the switch is not designed for full-load current interruption, the proposed rule would require that the switch be designed to cause the circuit-interrupting device to de-energize the incoming power to the ''line'' side of the switch before the disconnecting switch interrupts the circuit.

Proposed paragraph (c)(7) of § 75.825 would require each disconnecting switch to be labeled to identify which circuit it would de-energize. We believe that identifying the correct circuit would assist miners in ensuring that the proper circuit is de-energized protecting them from exposure to electrical hazards.

(d) Barriers and Covers

Proposed paragraph (d) would require all compartments that provide access to high-voltage conductors or parts to have a barrier or cover to prevent miners from contacting high-voltage circuits. Therefore, low- or medium voltage circuits, including control circuits, must be separated by a barrier from high-voltage circuits if they are located in the same compartment. If the barrier was made of conductive material, it would need to be grounded to the power center frame. All control devices, other than those mounted on the high-voltage circuit-interrupting device, would need to be mounted so that they are separated from high-voltage parts. The purpose of this requirement is to minimize miners' exposure to high-voltage conductors or parts while working on or troubleshooting the control circuit. Miners would be protected against shock hazards that could arise from inadvertent contact with energized high-voltage circuits.

(e) Main Disconnecting Switch and Control Circuit Interlocking

Proposed paragraph (e) of this section addresses the interlock requirements of the main disconnecting switch with the control circuit. The proposed interlock would allow the control circuit in the power center to be energized only through an auxiliary switch in the ''test'' mode when the main disconnecting switch is in the ''open and grounded'' position. When the main disconnecting switch is in the ''open and grounded'' position, the power conductors on the load side of the disconnecting switch are grounded. The interlocking feature would ensure that before the auxiliary switch can be placed in the ''test'' position, the main disconnecting switch must be open and grounded. When the main disconnecting switch is ''closed,'' the control circuit can only be powered through the normal position and the control circuit cannot be tested. In the normal position, removal of a cover for testing would cause the cover interlock switches to de-energize incoming power. These interlock requirements are intended to prevent energization of the high-voltage circuits during testing and troubleshooting.

(f) Interlocks

Proposed paragraph (f) of this section is derived from the granted PFMs for the use of high-voltage continuous mining machines. The PFM provisions included the wording ''cover interlock switches,'' but did not specify the number of interlock switches required. Proposed paragraph (f) clarifies this by requiring at least two interlock switches to be installed on the cover or removable barrier of any compartment containing high-voltage conductors or parts. Proposed paragraph (f) would also require that the switches be installed so that removal of a cover or barrier will cause the switches to de-energize high-voltage conductors or parts located behind the removed cover or barrier. Magnetic or whisker-type switches are acceptable. Our experience with inspecting plunger-operated switches has revealed that these switches may stick and not operate effectively after exposure to the mine environment. We believe that at least two switches coupled with required maintenance under 30 CFR 75.512 would provide the necessary protection to any miners (including qualified persons) who mistakenly remove a cover or barrier, by ensuring that the high-voltage circuits are de-energized whenever a cover is removed. This would protect miners from accidental contact with energized high-voltage circuits.

At times, qualified persons may need to remove covers and barriers when testing or troubleshooting *energized* power center control circuits. Proposed § 75.825(f) requires that the interlocks on the covers or barriers isolating *energized* high-voltage conductors or parts de-energize incoming power. The intent of proposed paragraph (f) permits bypassing cover and barrier interlocks that isolate *de-energized* high-voltage conductors or parts. To bypass the cover and barrier interlocks, proposed paragraph (e)(1) of this section requires the qualified person to open the main disconnecting switch and place the control circuit auxiliary switch in the *test* position. This would permit the removal of covers or barriers when testing or troubleshooting the power center control circuits.

For proposed paragraph (f) we are also considering revising the requirement that interlocks de-energize high-voltage circuits when covers and barriers are removed by adding an exception for troubleshooting control circuits. We specifically request your comments on this.

(g) Emergency Stop Switch

Proposed paragraph (g) of § 75.825 requires an emergency stop switch that is located on the outside of the power center and that would de-energize the incoming high-voltage to the power center should an emergency arise. We would require that the switch be hard-wired to a fail-safe ground-wire monitor. In emergency situations, reliability of the stop-switch is critical.

(h) Grounding Stick

Proposed paragraph (h) would require that the power center be equipped with a grounding stick to discharge high-voltage capacitors and circuits. Because capacitors are energy storage devices, they continue to be energized even after the disconnecting switch is opened. Therefore, the use of a grounding stick would ensure that a qualified person would not be exposed to energized high-voltage conductors or parts. While there is no industry definition, we consider a grounding stick to be a live line tool (hot stick) made of either wood or fiberglass. To safely discharge the capacitors and parts, we recommend a hot stick with a No. 1/0 A.W.G. copper conductor bonded to the tool end of the hot stick and to the power center frame. This provision would also require a label that identifies the location of the grounding stick so that a qualified person can easily find it. The grounding stick would be required to be stored in a dry location to maintain its effectiveness.

(i) Caution Labels

Proposed paragraph (i) would require that all compartments providing access to energized high-voltage conductors and parts display a caution label that warns miners against entering the compartment before de-energizing the incoming high-voltage circuits to the compartment. It should remind miners that the line side of a disconnecting switch remains energized when the switch is opened unless the incoming power to the switch is de-energized.

Section 75.826 High-Voltage Trailing Cables

Proposed § 75.826 specifies the requirements for high-voltage trailing cables. The requirements of this section are derived from granted PFMs for the use of continuous mining machines, existing §§ 75.804 and 75.822, and existing and proposed part 18.

Proposed paragraph (a) would require that the high-voltage trailing cables meet the requirements under § 18.35 and proposed § 18.54 of this title. Any high-voltage cable used as a trailing cable and meeting the design requirements of existing § 18.35 and proposed § 18.54, would be permitted to be used with high-voltage continuous mining machines.

Proposed paragraph (b) of this section would provide two options. The first option would permit a cable meeting the requirements of existing § 75.804. Section 75.804 requires, among other things, the use of a ground-check conductor not smaller than a No. 10 A.W.G. The reason it requires this minimum size is because the conductor is located on the periphery of the cable. When the cable is flexed the ground-check conductor is subjected to a larger bending radius that can weaken the ground-check conductor and cause it to break or become damaged. This option permits a ground-check conductor no smaller than the No. 16 A.W.G. to be located in the center of the cable. This design does not subject the ground-check conductor to the same stresses as the first option when the cable is flexed. The main advantage to this design versus the existing design in § 75.804 is the reduction of inter-machine arcing because the cable design contains three grounding conductors placed symmetrically. We have seen this cable design successfully used with high-voltage longwall equipment.

The second option would also eliminate the need to petition § 75.804(a) when the cable is designed with a ground-check conductor smaller than No. 10 A.W.G. but not smaller than a No. 16 A.W.G.

Section 75.827 Installation and Guarding of Trailing Cables

Proposed § 75.827 is partially derived from granted PFMs for the use of high-voltage continuous mining machines and paragraph (a)(3) is new. This section would require that trailing cables be installed and guarded according to the specific standards set forth in the provision. The purpose of this section is to protect high-voltage trailing cables from damage. Cable damage that results in exposed energized conductors would be a shock hazard to miners.

(a) Trailing Cable Installation

Proposed paragraph (a) would require that the trailing cable from the power center to locations specified in (a)(1), (2), or (3) be either supported on insulators or located in an unused entry. If the cable is located in a high seam mine and supported on insulators, it is less likely to be damaged by equipment running into or over it. A damaged cable may expose energized conductors, and thereby present a shock hazard to miners. While supporting the cable on insulators in a high seam mine would protect the cable from damage and the miner from shock hazards, the same would not be true for a low seam mine. Consequently, we are proposing the option of allowing the cable to be located in an unused entry to achieve the same protection. Permitting the cable to be located in an unused entry would provide flexibility for mine operators, while maintaining the same measure of protection for miners. Although this option was not in most earlier granted PFMs for the use of high-voltage continuous mining machines, the option was allowed in recently granted PFMs for use of these machines. We request comments on this provision for other methods of installing and protecting the high-voltage trailing cable.

If the cable is located in an unused entry, the proposed rule would require that barricade tape and warning signs be used to alert miners that high-voltage cables are present. This proposed rule would not preclude foot travel but would warn operators of mobile equipment against traveling into the entry and running over the cable. An acceptable method to comply with both the barricade tape and warning sign requirements would be the use of pre-printed tape that displays a warning such as ''DANGER HIGH-VOLTAGE CABLE.''

Proposed paragraph (a)(1) would require the cable to be supported on insulators or placed in a barricaded, unused entry from the power center to the last open crosscut during advance mining. Proposed paragraph (a)(2) would require the cable to be supported on insulators or placed in a barricaded, unused entry from the power center to within 150 feet from any pillar workings during second mining. Second mining is defined in existing 30 CFR 75.332(b)(1) as ''intentional retreat mining where pillars have been wholly or partially removed, regardless of the amount of recovery obtained.'' Proposed paragraph (a)(3) would require the cable to be supported on insulators or placed in a barricaded, unused entry from the power center to within 150 feet of the continuous mining machine when the machine is used in outby areas. Examples of continuous mining machine usage in outby areas would include, but not be limited to, cutting overcasts, underpasses and sumps, and cleaning rock falls.

A cable extending beyond the locations specified in proposed paragraphs (a)(1), (2), and (3) does not have to be supported on insulators or placed in an unused entry. Furthermore, we believe that supporting the cable beyond the specified locations would be impractical because of the dynamics of the mining process. Consequently, the provision does not require that the cable be supported beyond these locations.

(b) Temporary Storage of Cables

Proposed paragraph (b) would allow the temporary lacing of cable into a sled or crosscut to store the slack cable in those areas specified in paragraphs (a)(1) to (a)(3) of this section. Proposed paragraph (b) is an exception to proposed paragraph (a) which requires that the trailing cable be either supported on insulators or located in a barricaded, unused entry. A sled or crosscut would be required to be barricaded to prevent mobile equipment from running over the cable in those areas specified in paragraphs (a)(1) to (a)(3) of this section. Warning signs would also be required to alert miners to the existence of an energized, high-voltage cable. Barricade tape pre-printed with a warning such as ''DANGER HIGH-VOLTAGE CABLE'' would meet the intent of the proposed rule. The temporary storage requirements of this paragraph are intended to protect the cable from damage and miners from contacting the energized cables.

(c) Guarding

Proposed paragraph (c)(1) of § 75.827 would require that the high-voltage cable be guarded at certain locations. These locations are those sections of the cable where miners are likely to come in contact with the cable and where the cable may be subject to possible damage. All guarding would be required to fully cover the cable in the areas specified in (c)(1)(i)–(iii) to provide a physical barrier between the cable and the miners. While guarding might cover a damaged cable, the damaged cable should be repaired immediately or removed from service as required by existing § 75.512. The purpose for requiring guarding is to protect the miner from shock hazards and protect

the cable from damage rather than for the purpose of repairing the cable.

Proposed paragraph (c)(2) would require that guarding be constructed from grounded metal or nonconductive flame-resistant material. If a marking does not appear on the guarding to indicate that it is flame-resistant, we will request documentation to substantiate the flame-resistance quality. Metal and non-conductive guarding could be either a continuous length or overlapping shorter pieces. Shorter pieces of metal guarding would need to be bonded together to ensure a continuous metallic path. In addition, metal guarding would have to be bonded and grounded.

Additionally, if the cable becomes damaged so that high-voltage conductors become exposed, it can create a shock hazard for miners. If grounded metal guarding is used, it would activate the ground-fault protection and de-energize the cable. If non-conductive guarding is used, it would isolate miners from the exposed, energized conductors. Therefore, the use of these materials would help prevent miners from being exposed to shock hazards if they contact the guarding when energized conductors are exposed.

(d) Suspended Cables and Cable Crossovers

Proposed paragraph (d)(1) offers a mine operator two options for protecting the high-voltage trailing cable in or inby the last open crosscut when equipment must cross any portion of the cable. The option provided by proposed paragraph (d)(1)(i) would require the high-voltage trailing cable to be suspended from the roof in those mines where sufficient clearance exists so that mine equipment will not damage the cable. The option provided by proposed paragraph (d)(1)(ii) would require that the high-voltage trailing cable be protected by a commercially available cable crossover. Where sufficient clearance from the mine equipment to the mine roof does not exist, a mine operator must use the option in proposed paragraph (d)(1)(ii). Cable crossovers are commercially available and have been used throughout the industry to protect cables from being damaged by equipment. These provisions help ensure that the high-voltage trailing cable is protected from damage by moving equipment. If possible, work procedures should be developed to minimize the need for suspending the cable or using cable crossovers.

Proposed paragraph (d)(2) specifies the minimum design requirements for the cable crossovers. These minimum design requirements are intended to ensure that mine operators consider both equipment size and type in use at their mine so that the equipment is able to cross over the cable without damage to the cable. For example, mines that use track mounted equipment should use crossovers capable of preventing damage to the cable from the equipment track cleats. It has been our experience that cable crossovers provide protection to cables when properly used.

Section 75.828 Trailing Cable Handling and Pulling

Proposed § 75.828(a) is derived from granted PFMs for the use of high-voltage continuous mining machines. Proposed paragraph (a) addresses the types of personal protective equipment required to be used when it is necessary to handle energized cables. Proposed § 75.828(b) is new, and is based on our concern that cable damage may result from improper pulling. Paragraph (b) would require de-energizing the cable and following the manufacturer's procedures for pulling the cable by equipment other than the continuous mining machine.

(a) Handling

Proposed paragraph (a) of this section would prohibit handling energized high-voltage trailing cables without wearing properly tested and rated insulating gloves. The provision would require that testing and rating of the insulating gloves be in accordance with proposed § 75.833. In addition, paragraph (a) would require that if mitts, hooks, tongs, slings, aprons, or other personal protective equipment are used to handle the energized cable, insulating gloves must also be used. This would ensure that miners are protected against shock hazards while handling energized cables.

(b) Pulling

Proposed paragraph (b) of § 75.828 would require that the trailing cable be de-energized prior to being pulled by equipment other than the mining machine. The proposed paragraph would also require that the cable manufacturers' pulling procedures be followed. Cable manufacturers' recommendations usually include: The proper application of a rope or sling to pull the cable; pulling procedures that will not exceed the minimum bending diameter; maximum length of trailing cable that can be safely pulled; and the number of corners that it can be pulled around.

The purpose of this requirement would be to prevent damage to the cable. For example, when pulling cables with ropes, if a loop smaller than the minimum bending diameters for the size of the trailing cables being pulled is created, the cable can be damaged. Proper pulling procedures would minimize cable damage and protect miners against shock hazards.

Section 75.829 Tramming Continuous Mining Machines In and Out of the Mine, and From Section to Section

Proposed § 75.829 is partially derived from granted PFMs for the use of high-voltage continuous mining machines, and proposed § 75.901. High-voltage continuous mining machine PFMs include requirements for either using a portable transformer that supplies 995-volts to the hydraulic pump motor and controls, or a temporary onboard step-up transformer to power the 2400-volt hydraulic pump motor and controls on the machine. In addition to these two options, the Agency has granted petitions to modify § 75.901 to allow the use of low-/medium-voltage, three-phase, diesel-powered generator sets to move section equipment. We anticipate the need to use high-voltage diesel-generator sets to move high-voltage continuous mining machines.

In developing this section, we envisioned the use of the following power sources to tram the continuous mining machine: a medium-voltage power source, an onboard step-up transformer, and a high-voltage diesel generator set to energize the hydraulic pump motor and controls of the continuous mining machine.

(a) Conditions of Use

Proposed paragraph (a) of this section sets forth the general requirements when using any of the power sources specified in paragraph (c) of this section for moving continuous mining machines. Proposed paragraph (a)(1) of this section is derived from § 75.500 which prohibits equipment not approved by us as ''permissible'' to be taken into or used in specific areas of the mine. Typically, these power sources are not ''permissible'' and, therefore, must not be permitted in these areas.

Proposed paragraph (a)(2) is new. It would require that the continuous mining machine not be used for mining or cutting while being trammed from section-to-section or in or out of the mine if the mining machine is powered by a medium-voltage power source, an onboard step-up transformer, or a high-voltage diesel-generator set. However, if mining or cutting is required, a power center that meets the requirements of § 75.825 must be used. In granted PFMs, the power sources permitted for tramming the continuous mining

machine included rewiring of the input to use 995 volt for tram and control functions, or an onboard step-up transformer. Typically these sources do not have the capacity to power the continuous mining machine for mining or cutting functions. Proposed paragraphs (c)(1) and (c)(2) are identical to the PFM requirements, while proposed paragraph (c)(3) permits the use of a high-voltage diesel generator. If mining or cutting were attempted while the machine is powered by these power sources, overloading and loss of power could occur. Typically these power sources are not of sufficient size to power all motors on the continuous mining machine for mining or cutting purposes.

Proposed paragraph (a)(3) would require that low-, medium-, and high-voltage cables comply with existing §§ 75.600–1, 75.907, and proposed § 75.826 when using the power sources specified in paragraph (c) of this section for moving continuous mining machines. Existing § 75.600–1 requires flame-resistant cables, existing § 75.907 specifies the design requirements for medium-voltage trailing cables, and proposed § 75.826 specifies the design requirements for high-voltage trailing cables.

Proposed paragraph (a)(4) would require that the high-voltage cable be secured on-board the mining machine. When using an on-board step-up transformer or a diesel-generator set, as permitted in proposed paragraphs (c)(2) and (c)(3), respectively, of this section, the energized high-voltage cable would need to be secured on-board the mining machine. If the trailing cable does not fit on the machine, a shorter length of cable should be substituted to connect the diesel-generator output to the continuous mining machine. The purpose of this requirement is to prevent anyone from handling energized, high-voltage cables and to minimize cable damage while tramming the continuous mining machine.

(b) Testing Prior to Tramming

Proposed paragraph (b) of § 75.829 is derived from granted PFMs to modify § 75.901 to allow the use of low- and medium-voltage diesel generators. Proposed paragraph (b)(1) would require that a qualified person conduct ground-fault and ground-wire monitor tests on the power sources specified in proposed paragraph (c) of this section, and that the circuits pass these tests prior to moving the continuous mining machine. If these tests indicate equipment failure, paragraph (b)(1) would require the mine operator to comply with proposed § 75.832(f), and correct the defect prior to moving the mining machine. Paragraph (b)(1) would also require that the qualified person record the results of the tests, and the mine operator maintain a record of the tests for one year as required by proposed § 75.832(g). The ground-fault test would verify that the circuit will be de-energized when a ground-fault condition exists. Power center manufacturers provide test circuits so ground-fault protection can be tested without subjecting the power system to an actual ground-fault condition. The ground-wire monitor test would verify that the circuit will be de-energized when the ground-check or grounding circuit is opened. Ground-wire monitor manufacturers provide a built-in test switch for this purpose. Ground-wire monitors would be required when low and medium power sources are used as permitted by proposed paragraphs (c)(1)(i) and (c)(2)(i) of this section. Ground-wire monitors would not be required when the provision of this section requires the use of external bonding for high-voltage equipment. A ground-wire monitor would not be required for high-voltage circuits of power sources specified in proposed paragraphs (c)(2) and (c)(3). In these applications, external bonding required by proposed §§ 75.829(c)(2)(iii)(B) and 75.829(c)(3)(ii) would be used to connect the frames of high-voltage equipment together.

Proposed paragraph (b)(2) would require that prior to tramming the continuous mining machine, a responsible person designated by the operator, test the grounded-phase detection circuit on the high-voltage continuous mining machine to ensure that the detection circuit would detect a grounded-phase condition. This is the same requirement as proposed § 75.832(e), except the test needs to be conducted prior to tramming. If these tests indicate equipment failure, the mine operator must comply with proposed § 75.832(f), and correct the defect prior to moving the mining machine.

Proposed paragraph (b) would not require a repeat of the ground-fault, ground-wire monitor, and grounded-phase tests when a continuous mining machine is stopped intermittently while tramming. The purpose of this paragraph is to require that functional tests be performed before the equipment begins its move from the surface to underground, from underground to the surface, or moves from one part of the mine to another. It does not require a functional test after momentary or incidental stoppage during the moving process.

This method of testing enhances safety by preventing miners from being exposed to energized circuits while performing the test. The combination of the ground-fault, ground-wire monitor, and grounded-phase tests would ensure safety devices operate to protect miners from shock hazards should a fault condition occur.

(c) Power Sources

Proposed paragraph (c) would specify power sources, in addition to the power center, that may be used when the mining machine is moved in and out of the mine or from section to section. Power sources specified in this section have been selected to avoid the need to handle energized, high-voltage cables.

(1) Medium-Voltage Power Source

Proposed paragraph (c)(1) of § 75.829 is derived from the granted PFMs for the use of high-voltage continuous mining machines. This option would allow the use of a medium-voltage power source that supplies 995 volts to the continuous mining machine. Figure 1 in this section illustrates a high-voltage continuous mining machine using a 995 volt power source. The power source can be supplied by the mine's power system, or a low- or medium-voltage diesel-generator set. If the power source is a portable transformer, the proposed rule would prohibit moving the transformer while energized. However, if a low- or medium-voltage diesel-generator set is used as a power source, the rule would permit the generator set to be moved while energized. If a diesel generator supplies power to a separate portable transformer, the proposed rule would prohibit the transformer from being moved while energized. To use the option in this paragraph, the machine circuitry would need to be rewired to allow the medium-voltage to energize the tram and hydraulic pump motor circuits. Backfeeding the continuous mining machine power transformer with medium voltage to energize the high-voltage circuit would be prohibited. In addition, the mine operator would have to comply with the applicable provisions in §§ 75.500 through 75.1000, such as overcurrent, ground-fault, undervoltage, and ground-wire monitors.

(2) Onboard Step-Up Transformer

Proposed paragraph (c)(2) of § 75.829 is derived from granted PFMs for the use of high-voltage continuous mining machines. It would allow the use of a temporary onboard step-up transformer. The transformer would convert low- or medium-voltage to high-voltage to power the continuous mining machine.

Figure 2 in this section illustrates this configuration. Proposed paragraph (c)(2)(i) would require low- or medium-voltage to comply with applicable requirements in 30 CFR part 75. For example, overcurrent, ground-fault, and undervoltage protection required in Subpart J are applicable.

Proposed paragraph (c)(2)(ii) would require that the high-voltage output circuit of the transformer comply with proposed § 75.824. For a detailed discussion of these requirements see the section-by-section discussion to proposed § 75.824.

Proposed paragraph (c)(2)(iii) would require that the transformer be securely installed on-board the continuous mining machine to prevent it from falling off the machine and to minimize vibration. Vibration could lead to an internal ground-fault or damage to the transformer. The frame of the on-board temporary transformer would be required to be bonded to the continuous mining machine frame and the metallic shell of each cable coupler by at least a No. 1/0 A.W.G. or larger conductor, and connected to the incoming ground wire of the trailing cable. This would ensure a low impedance grounding path from the onboard transformer to the outby power source should a ground-fault occur. Paragraph (c)(2)(iii)(C) would require that the transformer be equipped with at least two interlock switches for each cover and an external emergency stop switch to de-energize outby power when activated.

(3) Diesel-Generator Set

Proposed paragraph (c)(3) of § 75.829 is new. It contains requirements for using a diesel-generator set to supply high-voltage power for the continuous mining machine in certain circumstances. The first circumstance in which the requirements apply is when moving the continuous mining machine from section-to-section or in and out of the mine. The second circumstance is when the trailing cable to the continuous mining machine is providing high-voltage power from a high-voltage diesel generator set or a combination of a diesel generator set and a transformer.

A diesel-generator set could be either a high-voltage generator or a combination of a low-, medium-, or high-voltage generator and a transformer.

When the trailing cable to the continuous mining machine is providing low- or medium voltage from a diesel generator set or a combination of a diesel generator set and a transformer, proposed paragraph (c)(1) or (c)(2) would apply. If a low- or medium-voltage generator is to be used, it would require a PFM of existing § 75.901, Protection of low- and medium-voltage three-phase circuits used underground. Figures 3 and 4 of this section illustrate the variations when the trailing cable connected to the continuous mining machine is energized with high-voltage from a diesel-generator power source.

Proposed paragraph (c)(3)(i) would require a grounding resistor to satisfy two requirements. First, it would have to be rated for the maximum voltage to which it is subjected. Second, it would have to limit the ground-fault current to no more than 0.5 ampere. Requiring a grounding resistor rated for the maximum voltage would ensure that adequate insulating properties are provided for the grounding resistor. This is especially important when using autotransformers. When using an autotransformer, the grounding resistor would be required to be located between the neutral of the wye connected generator and the generator frame, and it must be rated for the highest output voltage of the autotransformer. A phase-to-ground fault occurring on the secondary side of the autotransformer would subject the grounding resistor to the output voltage of the autotransformer. This is because autotransformers have only one winding-per-phase and do not provide the electrical isolation characteristics necessary to create a separately derived system. A resistor that is subjected to a voltage higher than its rating can potentially explode, causing serious injury or death to persons nearby, or it can open from overcurrent, leaving the system ungrounded. Limiting the ground-fault current to not more than 0.5 ampere, and providing the sensitive ground-fault protection set forth in paragraphs (c)(3)(iv) provides increased protection against explosion, fire, and electrical shock.

If an isolation transformer is used in conjunction with a high-voltage generator, another neutral grounding resistor would need to be connected between the neutral of the transformer and its frame. This provision is intended to limit the voltage on the frame of the generator, transformer, and continuous mining machine to prevent a shock hazard during ground-faults.

Proposed paragraph (c)(3)(ii) would require bonding of the non-current carrying metal parts of the generator, transformer, and all cable couplers to the continuous mining machine using at least a No. 1/0 A.W.G. grounding conductor. This would eliminate any potential differences between equipment frames and provide a low impedance path for ground-fault current. The external No. 1/0 A.W.G. grounding conductor would provide visual evidence of a ground-fault current path and offer mechanical strength and durability. The intent of this provision is to minimize miners' exposure to shock hazards. This provision would satisfy the requirements of existing § 75.803, and eliminate the need for a ground-wire monitor.

Proposed paragraph (c)(3)(iii) would require the generator set to be in close proximity to the continuous mining machine. This provision would eliminate the hazards associated with handling energized high-voltage cables discussed in proposed § 75.828. Close proximity is intended to mean as close as practical using a solid connecting device to prevent free movement. This proposed paragraph would also require that the generator set and the continuous mining machine be securely attached by means of a tow-bar to prevent the generator set from moving freely. Chains, ropes, or slings would not be permitted as a sole means of preventing free movement. Compliance with this provision would limit the cable length between the generator and the continuous mining machine and thereby minimize cable handling and damage.

Proposed paragraph (c)(3)(iv) would require each three-phase output circuit, from the generator and transformer when used, to be equipped with sensitive ground-fault protection. The ground-fault circuit would be required to consist of a single window (zero sequence) current transformer and an instantaneous ground-fault device that would cause the appropriate circuit-interrupting device to open and the diesel engine to shut down. Ground-fault devices must cause the circuit interrupting device to open at no more than 0.125 ampere. Additionally, the proposed rule would prohibit the equipment grounding conductor from passing through the ground-fault current transformer. Passing the equipment grounding conductor through the current transformer would prevent detection of any ground-fault current.

Proposed paragraph (c)(3)(v) would require each three-phase circuit, from the generator and transformer when used, to be equipped with short-circuit and undervoltage protection. The purpose of short-circuit and undervoltage protection is discussed under proposed §§ 75.824(a)(1) and 75.824(a)(3).

Proposed paragraph (c)(3)(vi) would require a test circuit for each ground-fault device. The purpose of a test

circuit is discussed under proposed § 75.824(a)(2)(vii).

Proposed paragraph (c)(3)(vii) would require labels to be mounted next to or on the instantaneous trip unit of each circuit interrupting device. This label would list the maximum circuit interrupting device setting allowed for short-circuit protection of the respective circuit. Since the minimum short circuit current is calculated using the maximum length of cable allowed, the label will assist in ensuring that adequate short circuit protection for each circuit is provided. Proper short-circuit settings will prevent sustained arcing during electrical faults and a subsequent fire hazard from occurring.

Section 75.830 Splicing and Repair of Trailing Cables

(a) Splices and Repairs

Proposed § 75.830(a) is derived from granted PFMs for high-voltage continuous mining machines. This proposed section addresses the training/qualifications and the manner in which the trailing cable is to be spliced to ensure that miners are not exposed to shock and burn hazards while splicing or repairing the cable.

Proposed paragraph (a)(1) would require that cable splicing and repair be performed only by a qualified person who received specific training in cable splicing and repair of high-voltage cables. This training must be accomplished through the annual training under 75.153(g). The intent of this provision is to ensure that the person performing the splicing and repair of cable understands the construction of the cable, the purpose of every component, and the hazards associated with failure to replace each component with a component similar to the original.

Proposed paragraph (a)(2) would require that the spliced or repaired cable provide the same degree of protection to miners as the original cable. The quality of workmanship is vital to maintaining the same level of protection to miners as provided by the original cable.

Proposed paragraph (a)(3) would require that splices and repairs of trailing cables satisfy the requirements in existing § 75.810. Existing § 75.810, among other things, references existing § 75.604 which requires that the spliced or repaired cable be mechanically strong and provide the same flexibility and conductivity as the original cable. It also requires that the cable be effectively insulated and sealed to exclude moisture. Moisture would minimize the insulation quality and could render the splice a potential shock hazard to miners. Further, the splice or repair would be required to have flame-resistant qualities and good bonding to the outer jacket. The trailing cable, which would be required to have shielding around each power conductor and a double jacketed protection, must be repaired using an MSHA-approved splice kit. These kits provide specific material and instructions to be used when splicing or repairing the cable to ensure that it is flame resistant. Using this material and following these instructions is necessary to ensure the flame-resistant quality of the cable, and avoid exposing miners to potential fire and shock hazards.

(b) Permanent Cable Repair

Proposed paragraph (b) is derived from granted PFMs for the use of high-voltage continuous mining machines, and would require that MSHA-approved high-voltage kits be used, which include instructions for outer-jacket repairs and splices. Because the outer jacket protects the cable from damage, it is important to use appropriate materials and follow proper procedures.

The majority of PFMs included a provision to prohibit the use of temporary and/or permanent tape-type splices. The purpose of this prohibition was to prevent the use of non-vulcanizing tape from being used for splices or outer jacket repair. Regular tape repairs to high-voltage trailing cables do not exclude moisture which leads to insulation degradation and subsequent ground-fault conditions. When the materials in the MSHA-approved kits are properly applied, they will create a splice or outer jacket repair that will exclude moisture from the trailing cable. Since this proposed paragraph requires the use of an MSHA-approved high-voltage kit, this prohibition was not required. As explained before, improper high-voltage trailing cable repair can lead to miners' being exposed to shock and fire hazards.

(c) Splicing Limitations

Proposed paragraph (c) is derived from granted PFMs for the use of high-voltage continuous mining machines, and would prohibit splicing of the trailing cable within 35 feet of the continuous mining machine. Our experience with low- and medium-voltage equipment has shown that this portion of the cable is subjected to the most stresses and strains. If this portion of the cable is spliced, electrical connections in the splice can weaken and cause cable damage. This can lead to potential shock hazards to miners. In addition, this portion of the cable is handled by miners more often than the rest of the cable. Therefore, the probability of miners being shocked by an inadequate splice within this portion of cable would be greater.

Section 75.831 Electrical Work; Troubleshooting and Testing

Proposed § 75.831 is derived from granted PFMs for the use of high-voltage continuous mining machines and existing § 75.820. This section would specify safe procedures to be followed when performing electrical work, including troubleshooting and testing.

(a) Trailing Cable and Continuous Mining Machine Electrical Work Procedures

Proposed paragraph (a) would require that a qualified person de-energize the trailing cable circuit and complete one of the lock-out and tagging procedures specified in paragraphs (a)(1) or (a)(2) prior to performing electrical work on the trailing cable or continuous mining machine. De-energization is usually accomplished by opening the circuit-interrupting device. The qualified person must follow these work procedures to prevent inadvertent re-energization. These procedures are important to ensure that miners are not exposed to potential shock, fire, or other hazards when performing electrical work.

Proposed paragraphs (a)(1) and (a)(2) of this section would specify the options available for lock-out and tagging procedures. Depending on the power center design, a disconnecting switch or a cable coupler can be used to lock-out and tag the trailing cable. Proposed requirement (a)(1) specifies work procedures if a disconnecting switch is used on the output circuit of the power center supplying power to the continuous mining machine. If a disconnecting switch is used, proposed paragraph (a)(1)(i) would require the switch to be opened to provide visual evidence that the output is de-energized and grounded. Proposed paragraph (a)(1)(i) would also require that the switch be locked in the open and grounded position and tagged. This would allow the cable coupler plug to remain connected to the power receptacle. Additionally, proposed paragraph (a)(1)(ii) would require the plug and receptacle to be locked together and tagged. The reason for this requirement is that we are concerned that someone may unplug the cable from the locked-out circuit and plug it into the spare circuit. When this option is used, a grounding receptacle would not be needed because opening the disconnecting switch grounds the high-voltage trailing cable.

We are aware that some mine operators prefer not to disconnect the high-voltage couplers since it may lead to problems when re-energizing the circuit. The major problem caused by disconnecting the high-voltage couplers is the risk of contaminating the coupler's insulation system. Using a disconnecting switch to ground and isolate power from the trailing cable and continuous mining machine would eliminate the need to remove the cable coupler plug from the receptacle.

Proposed paragraph (a)(2) would permit using the cable coupler as the disconnecting device instead of a disconnecting switch. After power has been removed, proposed (a)(2)(i) would require the plug to be disconnected from the receptacle and reconnected to a grounding receptacle. The grounding receptacle, which is mounted on the power center, would cause all cable conductors to be grounded to the power center frame. Connecting the plug to the grounding receptacle would ensure that no voltage would be present in the cable conductors.

Proposed paragraph (a)(2)(ii) would require the plug and grounding receptacle to be locked together and tagged. Tagging would alert other miners that work is being done on the circuit, and the lock would prevent the circuit from being re-energized and ungrounded while work is being performed. These requirements would prevent shock hazards to miners while performing electrical work.

Lastly, proposed paragraph (a)(2)(iii) would require placing a dust cover over the power receptacle to protect it from becoming contaminated by dust when the trailing cable is disconnected. Dust is a conducting medium and can create ground faults. Another benefit of using the dust cover is to prevent contact with parts of the receptacle that could be energized.

(b) Trailing Cable Grounding

Proposed paragraph (b) would require that a qualified person de-energize the trailing cable circuit as required in paragraph (a) and complete one of the lock-out and tagging procedures specified in paragraphs (b)(1) or (b)(2) prior to testing and troubleshooting the de-energized trailing cable. As discussed in proposed § 75.831(a), de-energization is usually accomplished by opening the circuit-interrupting device. The qualified person must perform these work procedures to prevent inadvertent re-energization. These procedures are important to ensure that miners are not exposed to potential shock, fire, or other hazards when performing electrical work.

Proposed paragraphs (b)(1) and (b)(2) of § 75.831 would specify the lock-out and tagging options available for troubleshooting and testing the high-voltage trailing cable. As discussed in proposed paragraph (a)(1) of § 75.831, when a disconnecting switch is used, it can open and ground the trailing cable circuit. Proposed paragraphs (a)(1)(i) and (b)(1)(i) would require the disconnecting switch to also be locked and tagged. Proposed paragraph (b)(1)(ii) would require the plug to be disconnected from the power receptacle. Proposed paragraph (b)(1)(iii) would require that a lock and tag be placed on the plug to prevent a miner from inserting the plug into a receptacle. Finally, proposed paragraph (b)(1)(iv) would require that a dust cover be placed over the power receptacle. These provisions would establish proper work procedures prior to testing and troubleshooting of the trailing cable.

Proposed paragraph (b)(2) addresses the design where a switch is not provided. In this case, the cable coupler would be used as the disconnecting device instead of a disconnecting switch, to establish work procedures when troubleshooting and testing high-voltage trailing cables. Proposed paragraphs (a)(2)(i) and (b)(2)(i) of this section would require the plug to be disconnected from the power receptacle and connected to the grounding receptacle to ensure all power conductors are grounded. The plug could then be removed from the grounding receptacle. Proposed paragraph (b)(2)(ii) would require the plug to be locked and tagged to prevent it from being reconnected to any receptacle. Proposed (b)(2)(iii) would require that a dust cover be placed over the power receptacle to prevent insulation contamination. Troubleshooting and testing of the cable could then commence.

(c) Trailing Cable Troubleshooting

Proposed paragraph (c) of § 75.831 would allow the trailing cable to be ungrounded only for the time necessary to locate a problem. Existing § 75.705 requires that all high-voltage lines be de-energized and grounded before work is performed. This proposed rule allows for ungrounding the circuit when troubleshooting and testing. Once the problem is found and prior to repair, the work procedures in proposed paragraph (a) of this section would have to be followed.

(d) Troubleshooting and Testing Limitations

Proposed paragraph (d) of this section is derived from granted PFMs for the use of high-voltage continuous mining machines and existing § 75.820(d), and would require that certain safety procedures be followed when troubleshooting and testing low- and medium-voltage energized circuits. Only qualified persons wearing properly rated gloves would be permitted to perform this work and only for the purpose of determining voltages and currents. We recognize that, in some instances, it is necessary for circuits or equipment to remain energized for troubleshooting and testing. For example, to identify the problems within a circuit, it may be necessary to keep the circuit energized to take voltage and current readings.

Proposed paragraph (d)(1) of this section would limit troubleshooting and testing of energized circuits only to low- and medium voltage systems. Since troubleshooting and testing energized circuits is known to be inherently hazardous work, these activities would be limited to low- and medium-voltage. This requirement is based on lack of availability of equipment that is adequate for testing energized high-voltage circuits and equipment. Insulation ratings for equipment commonly used to troubleshoot and test energized circuits is not adequate for high-voltage circuits.

Paragraph (d)(2) of this section would permit troubleshooting and testing of energized circuits only for the purpose of determining voltages and currents. This requirement would also allow troubleshooting and testing to evaluate waveform or other electrical diagnostic testing.

Proposed paragraph (d)(3) of this section would require that troubleshooting and testing of energized circuits be performed by qualified persons who wear protective gloves when the voltage of the circuit is 40 volts or more. Based on our electrical accident data and experience, 40 volts is the lowest voltage level that is likely to cause electrocution. The requirement for a qualified person would ensure that the person conducting the testing is aware of the hazards associated with these tests. Gloves would be required to provide the protection necessary if a miner inadvertently contacted energized circuits during troubleshooting and testing. The intent of this provision would be to ensure that the tests are conducted in a safe manner and miners would not be exposed to shock hazards.

Dry work gloves, in good condition (free of holes, etc.) would be permitted in lieu of rubber insulating gloves on circuits where the voltage is 40-volts or more but does not exceed 120 volts nominal, and on circuits where the

voltage exceeded 120 volts nominal but are intrinsically safe. Normally the nominal control circuit voltage value is 120 volts for mining equipment. Existing § 75.820(d) allows miners to use dry gloves when working on intrinsically safe circuits up to 1000 volts.

Rubber insulating gloves rated for at least the nominal voltage of the circuit and equipped with leather protectors would be required to be used on circuits where the voltage exceeded 120 volts nominal when the circuit is not intrinsically safe. Mining equipment typically has ratings such as 220-, 480-, 995-volts and higher. Rubber gloves are not commercially rated for each of these voltages. Rubber insulating gloves rated at 1,000 volts are commercially available. Therefore, when testing or troubleshooting low- and medium-voltage circuits, 1,000 volt rated gloves should be used.

(e) Power Center Electrical Work Procedures

Proposed paragraph (e) is derived from granted PFMs for the use of high-voltage continuous mining machines, and existing § 75.820(b). Proposed paragraph (e) would specify the safe procedures to be followed prior to performing electrical work in the power center. These procedures are important to ensure that miners are not exposed to potential shock, fire, or other hazards when performing electrical work. An exception to these procedures would be when troubleshooting and testing low- and medium-voltage circuits.

Proposed paragraph (e)(1) would require that a qualified person de-energize affected circuits within the power center prior to performing work on the affected circuit. De-energization is usually accomplished by opening the appropriate circuit-interrupting device. The qualified person must perform these work procedures to prevent inadvertent re-energization.

Proposed paragraph (e)(2) would require the corresponding disconnecting switch be opened. This switch, if designed and rated as a load-break switch, can be used to satisfy (e)(1). If not, then an outby circuit interrupting device would need to be opened prior to opening the disconnecting switch. Opening the main disconnecting switch would de-energize the primary of all transformers supplying high-voltage power in the power center and ground the load side circuit of the disconnecting switch. Removing high-voltage power and grounding the power conductors would protect the person working on a circuit from exposure to energized high-voltage circuits, and thereby reduce shock and electrocution hazards.

Proposed paragraph (e)(3) would require that the qualified person visually verify that the disconnecting switch contacts are open and grounded. This would be accomplished by viewing the position of the contacts through a window on the disconnecting switch compartment.

Proposed paragraph (e)(4) would require that the disconnecting switch be locked out and tagged. Proposed paragraph (f) of this section contains requirements for using locks. The process of tagging is also discussed in detail in proposed paragraph (f) of this section.

Proposed paragraph (e)(5) would require that all high-voltage capacitors in the power center be discharged prior to performing electrical work. Because capacitors are energy storage devices, they may continue to hold a charge even after the disconnecting switch is opened and the circuit is de-energized. Therefore, a grounding stick, as proposed in paragraph (h) of § 75.825, would be required to discharge these capacitors. This ensures that miners will not be exposed to shock hazards.

(f) Lockout and Tagging Responsibilities

Proposed paragraph (f) is derived from granted PFMs for the use of high-voltage continuous mining machines and existing § 75.820(c). Proposed paragraph (f)(1) would require each qualified person to install a lock and tag on the affected circuit or equipment. Additionally, proposed paragraph (f)(1) would require that when one or more qualified person(s) is working on the same circuit or equipment, each person would have to install their own lock and tag. The proposed rule would also require that only persons who install a lock and tag be permitted to remove them.

An individual lock, removable only by the person who installed it, places responsibility on the person performing the work and ensures personal safety. This requirement is intended to prevent accidental re-energization of equipment or circuits before all persons have completed their work.

Based on our research, we conclude that proposed paragraph (f)(1) would help protect miners against electrocution or electric shock. Our research includes a review of the danger and accident history of re-energization of circuits before work is completed, as well as the recommendation to lock-out and tag disconnecting devices prior to performing maintenance appearing in both the National Safety Council's Data Sheet 237 Revision B, Methods of Locking Out Electrical Switches (1971) and the National Fire Protection Association's NFPA 70E ''Standard for Electrical Safety Requirements for Employee Workplaces'' (2000 Edition). This locking system would afford the necessary safety protection because persons assigned to place and remove their own locks would be more aware of and responsible for their own security, and more likely to take the steps necessary to assure proper de-energization. This would also reduce the risk of error due to lack of communication or inadvertent re-energization.

Proposed paragraph (f)(2) would allow the mine operator to remove a lock and tag under certain conditions. If the person who installed the tag is not available (for example if the person is not at the mine or is in a remote location in the mine) and the repairs have been completed by others, the mine operator can authorize a qualified person to remove that person's lock and tag. The mine operator must notify the person who originally installed the lock and tag of this action.

Section 75.832 Frequency of Examinations; Recordkeeping

Proposed § 75.832 is primarily derived from granted PFMs for the use of high-voltage continuous mining machines and existing §§ 75.512 and 75.821(a). The major difference between the granted PFMs for the use of high-voltage continuous mining machines and this proposed section is that the granted PFMs require some tests to be done weekly, whereas this proposed section requires those tests to be conducted at least every 7 days. Past experience with existing regulations that require weekly examinations and tests revealed situations where the actual frequency between examinations and tests were as long as 13 days. Changing the requirement to testing every seven days would eliminate this long period between tests. To maintain a safe workplace, we would require this frequent examination and testing of the ground-fault and ground-wire monitor test circuits in the power center, the trailing cable, and the high-voltage continuous mining machine. Moving this equipment increases the likelihood of component failure and break down. Therefore, we consider it important that the required examinations and tests be conducted more frequently to identify defects. We believe that the examination schedule required by this section is necessary to prevent electric shock, fire, ignition, and operational hazards to miners.

This section would also require that the qualified person verify by signature and date that the tests and examinations have been completed. Such a record would include any unsafe conditions found and corrective actions taken. The section would further require the records be kept and made available for at least one year.

(a) Continuous Mining Machine Examination

Proposed paragraph (a) of § 75.832 would require that a qualified person examine the high-voltage continuous mining machine at least once every seven days to detect conditions that can expose miners to electrical or operational hazards. This paragraph was derived from existing §§ 75.512 and 75.821. By examining the high-voltage continuous mining machine, a qualified person can determine whether the electrical protection, equipment grounding, permissibility, cable insulation, and control devices are properly installed and maintained. The purpose of the examination is to ensure the safety of miners and to minimize their exposure to fire, electric shock, ignition, or operational hazards.

(b) Ground-Fault Test

Proposed paragraph (b) would require that at least once every 7 days, a qualified person would activate the ground-fault test circuit to ensure that the simulated ground-fault current would cause the circuit-interrupting device to open. In addition, a similar test is required by proposed paragraph § 75.829(b)(1) prior to tramming the continuous mining machine in or out of the mine or from section to section. This paragraph is derived from existing § 75.821 and granted PFMs for low- and medium voltage diesel generators. Activating the ground-fault test circuit would verify that the ground-fault protection operates properly. Existence of a ground-fault can expose miners to energized continuous mining machine frames.

(c) Ground-Wire Monitor Test

Paragraph (c) would require that at least once every 7 days, a qualified person test the ground-wire monitor circuit to verify that it will cause the corresponding circuit-interrupting device to open if the grounding conductor or ground-check conductor is opened. This test, like the ground-fault test in paragraph (b) of this section, is required by proposed paragraph § 75.829(b)(1) prior to tramming the continuous mining machine in or out of the mine or from section to section. This paragraph is based on the granted PFMs for the use of high-voltage continuous mining machines and granted PFMs for low- and medium voltage diesel generators; however, the frequency of testing was changed from ''weekly'' to ''at least every 7 days.'' This procedure would ensure that ground-wire monitors and corresponding circuit-interrupting devices will operate properly to de-energize the circuits they monitor. Testing of a ground-wire monitor would normally require simple activation of a readily available test switch.

(d) Trailing Cable Inspections

Proposed paragraph (d)(1) and (2) require that the high-voltage trailing cable be inspected for damage. The purpose of these provisions would be to identify a damaged cable that can expose miners to high-voltages while handling the cable.

Proposed paragraph (d)(1) would require a qualified person, once each production day, to de-energize the high-voltage trailing cable and examine the entire length of the cable from the power center to the continuous mining machine. We would consider a production day to be when the continuous mining machine is mining coal. The inspection would include examining for damage or deterioration of the outer jacket, splices, and jacket repairs. In addition, the qualified person would need to examine all areas of the cable where guarding is required. Although the trailing cable from the power center to the last open cross-cut is required to either be supported on insulators or placed in an unused entry where miners are not normally working, it is periodically handled during the mining cycle. The cable examination would not require removal of the guarding. When damaged guarding is being replaced, that portion of the cable should be thoroughly inspected. Therefore, a qualified person must examine the entire length of the cable in a timely manner, thereby protecting miners from shock and electrocution hazards. This requirement in the granted PFMs has been effective.

Proposed paragraph (d)(2) would require that at the beginning of each production shift a responsible person designated by the operator de-energize the high-voltage trailing cable and visually examine the portion of the cable that is unsupported. This unsupported portion of the cable to be examined would be as follows: From the continuous mining machine to the last open crosscut; to within 150 feet of the working place during retreat or second mining; or up to 150 feet of the continuous mining machine when the machine is used in outby areas for cutting overcasts, underpasses, sumps, etc. This unsupported trailing cable is more likely to be damaged by mobile equipment and to expose miners to shock hazards when handling the cable. Again, the cable examination would not require removal of the guarding. Therefore, the proposed rule would require that the cable be inspected at the beginning of every production shift to ensure the integrity of the cable. This proposed requirement is consistent with the provision in the granted PFMs for the use of high-voltage continuous mining machines.

(e) Grounded-Phase Detection Test

Proposed paragraph (e) of § 75.832 is derived from the granted PFMs for the use of high-voltage continuous mining machines. This section would require that at the beginning of each production shift, a responsible person designated by the operator, test the grounded-phase detection circuit on the high-voltage continuous mining machine to ensure that the detection circuit would detect a grounded-phase condition. The proposed standard would require that problems which arise during normal use of mining equipment be identified and corrected so miners would not be exposed to hazards. Testing the grounded-phase detection circuit would identify any damage or defects in the detection circuit. If the detection circuit is defective, a grounded-phase condition can remain undetected and miners could be exposed to shock hazards.

(f) Corrective Action

Proposed paragraph (f) of § 75.832 is derived from existing § 75.821(c). Proposed paragraph (f) would require equipment to be removed from service or repaired when any examinations or tests reveal a potential fire, electric shock, ignition, or operational hazard. This provision would assure that equipment that may pose a danger to miners is not used until the hazardous condition is corrected. For example, if examination of a cable reveals an exposed energized conductor, the potential fire, electric shock, and methane gas ignition hazards would put the safety of miners at risk and the cable would be required to be removed from service or repaired immediately. However, tests or examinations may reveal conditions that do not present one of the above potential hazards. In this case, the equipment would not need to be immediately removed from service, but instead could be repaired in a timely manner when material or parts are received. For example, a torn portion of guarding material may not present one of the hazards listed above.

Therefore, in that case a mine operator would not have to immediately remove the machine from service, but the guarding would have to be repaired or replaced in a timely manner.

(g) Record of Tests

Paragraph (g) of proposed § 75.832 is derived from existing § 75.821(d) and is consistent with our other existing recordkeeping standards. Proposed paragraph (g) would require that the person who examines and tests the equipment under paragraphs (a) to (c) of this section, and who is qualified under § 75.153, certify by signature and date that the examination and tests have been conducted. We accept certification only from the person who examines and tests the equipment because the person conducting the test will have knowledge of the results of the examinations and tests.

Another requirement under this proposed paragraph is that the qualified person who conducted the examination and tests record any unsafe condition found and any corrective action taken.

Records and certifications of tests and repairs are valuable tools for mine operators. Records and certifications can be used to point out patterns of equipment failure and design problems. They can also provide information that would be useful when investigating accidents.

Finally, proposed paragraph (g) would require that certifications and records be kept for at least 1 year and be made available at the mine for inspection by authorized representatives of the Secretary and representatives of miners.

Section 75.833 High-Voltage Insulating Gloves Used for Handling High-Voltage Trailing Cables

Proposed § 75.833 is derived from granted PFMs for the use of high-voltage continuous mining machines. The section addresses the ratings, tests required, and frequency of examination and testing of high-voltage insulating gloves. The requirements in proposed § 75.833 would provide miners protection against electric shock hazards associated with handling energized high-voltage trailing cables. Like the existing PFMs, proposed paragraph (a) of § 75.833 would require mine operators to supply high-voltage insulating gloves to miners for handling energized high-voltage trailing cables.

Proposed paragraph (b) of § 75.833 would require high-voltage insulating gloves to have a Class 1 (7,500 maximum use volts) or higher voltage rating in accordance with ASTM F496–02a, a nationally recognized consensus standard that is incorporated by reference. This provision is intended to protect miners against electrical shock hazards when energized high-voltage cables are handled. In accordance with the requirements for incorporating by reference, proposed paragraph (b) details how the public may inspect or purchase a copy of the incorporated standard and notes that according to his/her statutory authorization, the Director of the Federal Register has approved the incorporation by reference.

Proposed paragraph (c) of § 75.833 would require the rubber portion of the insulating gloves to be air-tested at the beginning of each shift. The test is conducted by rolling the cuff tightly toward the palm of the glove in such a manner that air is entrapped inside the glove. Puncture detection may be enhanced by listening for escaping air or feeling escaping air against the face. We would require that the gloves be air-tested to detect damage to the rubber gloves.

Proposed paragraph (d) of this section would require the leather and rubber insulating gloves to be visually examined before each use for signs of damage. The purpose of this paragraph would be to detect any defect or damage to the glove that may compromise the necessary protection to the miner.

Proposed paragraph (e) of § 75.833 would require the damaged rubber gloves to be removed from underground or destroyed. This would prevent a miner from using damaged gloves. Use of damaged gloves could lead to serious or fatal injuries. The proposed paragraph would also require that leather protectors be kept in good condition or replaced. If the leather is not kept in good condition, the safety protection afforded by the rubber gloves will be compromised.

Proposed paragraph (f) would require that rubber insulating gloves be electrically tested every 30 days in accordance with ASTM F496–02a, ''Standard Specification for In-Service Care of Insulating Gloves and Sleeves,'' that is incorporated by reference as in paragraph (b) of this section. The purpose of this formal testing procedure would be to ensure that the glove has the proper dielectric strength needed to provide proper protection to the miners. While the high-voltage longwall rule requires that gloves be tested every six months, we would require that the gloves be tested every 30 days because the cable for the high-voltage continuous mining machine is handled more frequently. The 30 day time period would begin from the first day the glove is given to the miner.

Section 75.1002 Installation of Electric Equipment and Conductors; Permissibility

Existing § 75.1002 addresses requirements for conductors and cables used in or inby the last open crosscut, and electric equipment and conductors and cables used within 150 feet of pillar workings. Existing paragraph (b) limits the types of electric conductors and cables permitted in areas where permissible equipment is required. This paragraph prohibits the installation of conductors such as trolley wires and trolley feeder wires, in areas where permissible equipment is required, and allows mine operators to use shielded high-voltage longwall cables. Permissible equipment is defined under existing § 18.2, and under § 318(c)(1) of the Mine Act. Such equipment is specifically approved by us to minimize the risk of fires and explosions in hazardous areas of underground mines.

Currently, existing § 75.1002 does not allow mines to use high-voltage continuous miners in or inby the last open crosscut. However, high-voltage continuous miners are being used, when approved by us through the petition for modification process under § 101(c) of the Mine Act. Since 1997, we have granted 38 PFMs to use this equipment. To our knowledge, no electrical fatalities have occurred to miners because of the use of high-voltage continuous mining machines in accordance with the granted high-voltage PFMs. Because of the improved high-voltage technology, the designed safety benefits and the proven-in-use experience, we are proposing to revise existing § 75.1002(b) to allow the use of high-voltage continuous mining machines in underground coal mines.

Accordingly, proposed paragraph (b)(5) of § 75.1002 is added to modify the existing requirements of § 75.1002 to allow the use of shielded high-voltage cables supplying power to permissible continuous mining machines. The shielding and design would protect against arcing and other electrical ignition hazards that may occur when the outer jacket material of the cable is damaged. The use of shielded high-voltage cables supplying power to continuous mining machines would reduce the risk of fire or explosion in face areas since these cables have equivalent or superior mechanical and electrical protective characteristics. This equipment offers other improved safety features, such as sensitive ground-fault protection against shock, fire, and explosion hazards. The safety criteria supporting proposed paragraph (b)(5) is based on the safe use of high-voltage

longwalls and high-voltage continuous mining machines.

The proposed standards would maintain or increase the protection currently afforded to miners. They standardize safety provisions appearing in only some petitions and add additional protections.

V. Executive Order 12866 (Regulatory Planning and Review and Regulatory Flexibility Act)

A. Compliance Costs

Executive Order (E.O.) 12866 as amended by E.O. 13258 requires that regulatory agencies assess both the costs and benefits of intended regulations. We have fulfilled this requirement, and have determined that this proposed rule would result in estimated yearly net compliance cost savings of approximately $1.40 million for mine operators.

Therefore, this proposed rule is not an economically significant regulatory action pursuant to section 3(f)(1) of E.O. 12866.

For mine operators with 20 to 500 employees, there would be yearly compliance costs of about $30,500 and yearly compliance cost savings of $1.433 million, which would result in net cost savings of about $1.40 million. The one mine operator with more than 500 employees who is currently using high-voltage continuous mining machines would incur yearly compliance costs of $61. For a complete breakdown of the compliance costs and savings of the proposed rule see Chapter IV of the Preliminary Regulatory Economic Analysis (PREA) associated with this rulemaking.

B. Benefits

The proposed rule would reduce the potential for electrical-related fatalities and injuries for several reasons. This risk reduction is derived from the improved electrical safety requirements when using high-voltage continuous mining machines due to: better design and construction criteria (such as required use of double jacketed cables); improved ground-fault protection; handling of lighter cables; and increased safety requirements for work practices. These design and work practice requirements offer greater protection against electrical shock, cable overheating, fire hazards, unsafe work and repair practices, and back injuries and other sprains caused by handling trailing cables. These benefits are detailed in Chapter III of the PREA associated with this rulemaking.

C. Regulatory Flexibility Act (RFA) and Small Business Regulatory Enforcement Fairness Act (SBREFA)

The Regulatory Flexibility Act (RFA) requires regulatory agencies to consider a rule's economic impact on small entities. Under the RFA, we must use the Small Business Administration's (SBA's) criterion for a small entity in determining a rule's economic impact unless, after consultation with the SBA Office of Advocacy, we establish an alternative definition for a small mine operator and publish that definition in the **Federal Register** for notice and comment. For the mining industry, SBA defines ''small'' as a mine operator with 500 or fewer employees. In addition, we traditionally have considered small mine operators to include those with fewer than 20 employees.

Although the rule does apply to mine operators with fewer than 20 employees that choose to use high-voltage continuous mining machines, our experience has been that no underground coal mine operator with fewer than 20 employees has ever requested a PFM to use high-voltage continuous mining machines. Therefore, we do not expect mine operators having fewer than 20 employees to request PFMs to use high-voltage continuous mining machines. However, we have analyzed the economic impact of the proposed rule on all underground coal mine operators with 500 or fewer employees, which conforms to the requirements of the RFA.

1. Factual Basis for Certification

Using SBA's definition of a small mine operator, the estimated yearly net compliance cost savings of the proposed rule on small underground coal mine operators is approximately $1.40 million. These estimated yearly net compliance cost savings compare with estimated annual revenues of approximately $8.3 million for small underground coal mine operators with 500 or fewer employees.

Based on our analysis, we have determined that the proposed rule would not have a significant economic impact on a substantial number of small underground coal mine operators with 500 or fewer employees. We have so certified these findings to the SBA. The factual basis for this certification is discussed in Chapter V of the PREA associated with this rulemaking.

VI. Paperwork Reduction Act of 1995

As a result of this proposed rule there would be: (1) an elimination of burden hours and related costs approved under OMB control numbers 1219–0065 and 1219–0116 (formerly 1219–0067) and (2) annual burden hours in the Information Collection Request (ICR) that accompanies this rulemaking. The burden hours and related costs for these two items are discussed below. However, for a more detailed explanation of how the burden hours and related costs for the two items were determined, see Chapter VII of the PREA associated with this rulemaking.

The information collection requirements contained in this proposed rule have been submitted to the Office of Management and Budget for review under 44 U.S.C. Sec. 3504(h) of the Paperwork Reduction Act of 1995, as amended. Respondents are not required to respond to any collection of information unless it displays a current valid OMB control number.

Elimination of Burden Hours

Due to this rulemaking, mine operators would no longer need a PFM of existing 30 CFR § 75.1002 to use a high-voltage continuous mining machine. Existing OMB control number 1219–0065 includes annual burden hours and costs related to the time it takes mine operators to prepare and file petitions with us, including PFMs to a high-voltage continuous mining machine. As a result of this rulemaking, the burden hours and costs approved under OMB control number 1219–0065 that relate to the time it takes operators to prepare and file petitions would need to be reduced to reflect the fact that PFMs to use a high-voltage continuous mining machine would no longer be needed. Therefore, the burden hours and costs in OMB control number 1219–0065 should be reduced by 84 hours and approximately $4,950, annually.

In addition, some of the paperwork burden to mine operators in proposed § 75.832 are already being accounted for in existing OMB control number 1219–0116 (formally OMB 1219–0067). When the high-voltage continuous miner rule becomes final, the burden in OMB control number 1219–0116 will be reduced and accounted for in the ICR that accompanies the high-voltage continuous miner rulemaking. Therefore, the burden hours and costs in OMB paperwork package 1219–0116 would be reduced by 16 hours and approximately $464 annually.

Annual Burden Hours

The proposed rule would impose 219 annual burden hours and related costs of about $6,511 on mine operators. Of the 219 annual burden hours, 21 hours and related costs of about $625 are associated with conducting a ground-fault and ground-wire monitor circuit

test prior to tramming the machine under proposed § 75.829, 120 hours and related costs of about $3,570 are associated with tagging requirements under proposed § 75.831, and 78 hours and related costs of about $2,320 are associated with a ground-wire monitor circuit test under proposed § 75.832(c).

The following proposed requirements under this rulemaking do not have associated paperwork burden hours or costs. Paragraph (i) of proposed § 75.825 requires that all compartments providing access to energized high-voltage conductors and parts must display a caution label to warn miners against entering the compartment(s) before de-energizing incoming high-voltage circuits. This is a normal business practice of manufacturers that make such compartments, as they currently place warning labels on the compartments.

Paragraph (b) of proposed § 75.827 concerns the temporary lacing of cables into a sled or crosscut in certain specified areas of the mine. In such areas, warning signs and barricade tape must be placed around the sled or at the entrances to the crosscut to restrict mobile equipment travel. Warning signs and barricade tape that may be purchased from any industrial supply vendor may be used to satisfy this requirement. The costs for such materials are included in the paperwork package that accompanies the proposed rulemaking.

Paragraphs (a) and (b) of proposed § 75.832 requires that exams or tests be conducted at least once every seven days and paragraph (g) requires that a record be made of such exams or tests. Paragraph (a) requires an exam of the high-voltage continuous mining machine. Paragraph (b) requires a test of the ground-fault test circuit. The exams of the high-voltage continuous mining machine required by paragraphs (a) and (b) are already being conducted as part of a larger weekly examination of electrical equipment that is required under existing § 75.512 (electrical equipment; examination, testing and maintenance). Existing § 75.512 also requires that a record be made of all such exams and tests. Thus, the burden associated with exams and records under proposed § 75.832(a) and (b) is already accounted for under existing § 75.512, and is approved under OMB control number 1219–0116. Therefore, such burden does not need to be included in the ICR accompanying this rulemaking.

VII. Other Regulatory Considerations

The Unfunded Mandates Reform Act

This proposed rule does not include any Federal mandate that may result in increased expenditures by State, local, or tribal governments, nor would it increase private sector expenditures by more than $100 million annually, nor would it significantly or uniquely affect small governments. Accordingly, the Unfunded Mandates Reform Act of 1995 requires no further agency action or analysis.

National Environmental Policy Act

MSHA has reviewed this proposed rule in accordance with the requirements of the National Environmental Policy Act (NEPA) of 1969 (42 U.S.C. 4321 *et seq.*) the regulations of the Council on Environmental Quality (40 U.S.C. part 1500), and the Department of Labor's NEPA procedures (29 CFR part 11). Since this proposed rule would impact safety, not health, the rule is categorically excluded from NEPA requirements because it would have no significant impact on the quality of the human environment (29 CFR 11.10(a)(1)). Accordingly, MSHA has not conducted an environmental assessment nor provided an environmental impact statement.

Assessment of Federal Regulations and Policies on Families

This proposed rule would have no effect on family well-being or stability, marital commitment, parental rights or authority, or income or poverty of families and children. Accordingly, Section 654 of the Treasury and General Government Appropriations Act of 1999 requires no further agency action, analysis, or assessment.

Executive Order 12630: Government Actions and Interference With Constitutionally Protected Property Rights

This proposed rule would not implement a policy with takings implications. Accordingly, Executive Order 12630, Governmental Actions and Interference With Constitutionally Protected Property Rights, requires no further agency action or analysis.

Executive Order 12988: Civil Justice Reform

This proposed rule was drafted and reviewed in accordance with Executive Order 12988, Civil Justice Reform. This proposed rule was written to provide a clear legal standard for affected conduct and was carefully reviewed to eliminate drafting errors and ambiguities, so as to minimize litigation and undue burden on the Federal court system. MSHA has determined that this proposed rule would meet the applicable standards provided in Section 3 of Executive Order 12988.

Executive Order 13045: Protection of Children From Environmental Health Risks and Safety Risks

This proposed rule would have no adverse impact on children. Accordingly, Executive Order 13045, Protection of Children from Environmental Health Risks and Safety Risks, requires no further agency action or analysis.

Executive Order 13132: Federalism

This proposed rule would not have ''federalism implications,'' because it would not ''have substantial direct effects on the States, on the relationship between the national government and the States, or on the distribution of power and responsibilities among the various levels of government.'' Accordingly, Executive Order 13132, Federalism, requires no further agency action or analysis.

Executive Order 13175: Consultation and Coordination With Indian Tribal Governments

This proposed rule would not have ''tribal implications,'' because it would not ''have substantial direct effects on one or more Indian tribes, on the relationship between the Federal government and Indian tribes, or on the distribution of power and responsibilities between the Federal government and Indian tribes.'' Accordingly, Executive Order 13175, Consultation and Coordination with Indian Tribal Governments, requires no further agency action or analysis.

Executive Order 13211: Actions Concerning Regulations That Significantly Affect Energy Supply, Distribution, or Use

In accordance with Executive Order 13211, MSHA has reviewed this proposed rule for its impact on the supply, distribution, and use of energy. Because this proposed rule would result in yearly net cost savings to the coal mining industry, this proposed rule would neither reduce the supply of coal nor increase its price.

This proposed rule is not a ''significant energy action,'' because it would not be ''likely to have a significant adverse effect on the supply, distribution, or use of energy'' ''(including a shortfall in supply, price increases, and increased use of foreign supplies).'' Accordingly, Executive

Order 13211, Actions Concerning Regulations That Significantly Affect Energy Supply, Distribution, or Use, requires no further agency action or analysis.

Executive Order 13272: Proper Consideration of Small Entities in Agency Rulemaking

In accordance with Executive Order 13272, MSHA has thoroughly reviewed this proposed rule to assess and take appropriate account of its potential impact on small businesses, small governmental jurisdictions, and small organizations. As discussed in Chapter V of this PREA, MSHA has determined and certified that this proposed rule would not have a significant economic impact on a substantial number of small entities.

List of Subjects

30 CFR Part 18

Approval regulations, Electric motor-driven mine equipment and accessories, Mine safety and health, Reporting and recordkeeping requirements.

30 CFR Part 75

Electric power, Fire prevention, High-voltage continuous mining machines, Incorporation by reference, Mandatory safety standards, Mine safety and health, Reporting and recordkeeping requirements, Underground coal mines.

Dated: July 6, 2004.

Dave D. Lauriski,

Assistant Secretary of Labor for Mine Safety and Health.

For the reasons discussed in the preamble, the Mine Safety and Health Administration proposes to amend 30 CFR parts 18 and 75 as follows:

PART 18—ELECTRIC MOTOR-DRIVEN MINE EQUIPMENT AND ACCESSORIES

1. The authority citation for part 18 continues to read as follows:

Authority: 30 U.S.C. 957 and 961.

2. Add § 18.54 to subpart b to read as follows:

§ 18.54 High-voltage continuous mining machines.

(a) *Separation of high-voltage components from lower voltage components.* In each motor-starter enclosure, the high-voltage components must be separated from lower voltage components by barriers or partitions, or placed in separate compartments to prevent the exposure of persons to energized high-voltage conductors or parts. Barriers or partitions must be constructed of grounded metal or nonconductive insulating board.

(b) *Interlock switches.* Each removable cover, barrier, or partition of a compartment in the motor-starter enclosure containing high-voltage components must be equipped with at least two interlock switches arranged to automatically de-energize the high-voltage components within that compartment when the cover, barrier or partition is removed.

(c) *Circuit-interrupting devices.* Circuit-interrupting devices must be designed and installed to prevent automatic reclosure.

(d) *Transformers supplying control voltages.* (1) Transformers supplying control voltages must not exceed 120 volts.

(2) Transformers with high-voltage primary windings that supply control voltages must incorporate a grounded electrostatic (Faraday) shield between the primary and secondary windings. Grounding of the shield must be as follows:

(i) Transformers with an external grounding terminal must have the shield grounded by a minimum of No. 12 A.W.G. grounding conductor extending from the grounding terminal to the equipment ground.

(ii) Transformers with no external grounding terminal must have the shield grounded internally through the transformer frame to the equipment ground.

(e) *Onboard ungrounded, three-phase power circuit.* A continuous mining machine designed with an onboard ungrounded, three-phase power circuit must:

(1) Be equipped with a light that will indicate a grounded-phase condition;

(2) Have the indicator light installed so that it can be observed by the operator from any location where the continuous mining machine is normally operated; and

(3) Have a test circuit for the grounded-phase indicator circuit to ensure that the circuit is operating properly. The test circuit must be designed so that when activated, it does not require removal of any electrical enclosure cover or create a double-phase-to-ground fault.

(f) *High-voltage trailing cable(s).* High-voltage trailing cable(s) must conform to the ampacity and outer dimensions in accordance with the Insulated Cable Engineers Association (ICEA) Standard ICEA S–75–381/National Electrical Manufacturer's Association (NEMA) Standard NEMA WC 58–1997. The Director of the Federal Register approves this incorporation by reference in accordance with 5 U.S.C. 552(a) and 1 CFR part 51. You may inspect a copy at any of the following locations: MSHA Coal Mine Safety and Health District office; the Office of Standards, Regulations, and Variances, 1100 Wilson Boulevard, Arlington, VA; or at the National Archives and Records Administration (NARA). For more information on the availability of this material at NARA, call 202–741–6030, or go to: *http://www.archives.gov/federal_register/code_of_federal_regulations/ibr_locations.html.*

You may also purchase a copy from Global Engineering Documents, 15 Inverness Way East, Englewood, Colorado 80112. In addition, the cable must be constructed with:

(1) 100 percent semi-conductive tape shielding over each insulated power conductor;

(2) A grounded metallic braid shielding over each insulated power conductor;

(3) A ground-check conductor not smaller than a No. 10 A.W.G.; or if a center ground-check conductor is used, not smaller than a No. 16 A.W.G.; and

(4) Two reinforced layers of jacket; an outer and inner protective layer. The inner layer must be a distinctive color from the outer layer to allow easy recognition of damaged jacket areas. The color black must not be used for either protective layer.

(g) Safeguards against corona must be provided on all 4,160 voltage circuits in explosion-proof enclosures.

(h) The maximum pressure rise within an explosion-proof enclosure containing high-voltage switchgear must be limited to 0.83 times the design pressure.

(i) High-voltage electrical components located in high-voltage explosion-proof enclosures must not be coplanar with a single plane flame-arresting path.

(j) *Minimum creepage distances.* Rigid insulation between high-voltage terminals (Phase-to-Phase or Phase-to-Ground) must be designed with creepage distances in accordance with the following table:

MINIMUM CREEPAGE DISTANCES

Phase to phase voltage	Points of measure	Minimum creepage distances (inches) for comparative tracking index (CTI) range [1]			
		CTI ≥ 500	380 ≤ CTI < 500	175 ≤ CTI < 380	CTI < 175
2,400	Ø-Ø	1.50	1.95	2.40	2.90
	Ø-G	1.00	1.25	1.55	1.85
4,160	Ø-Ø	2.40	3.15	3.90	4.65
	Ø-G	1.50	1.95	2.40	2.90

[1] Assumes that all insulation is rated for the applied voltage or higher.

(k) *Minimum free distances.* Motor-starter enclosures must be designed to establish the minimum free distance (MFD) between the wall or cover of the enclosure and uninsulated electrical conductors inside the enclosure in accordance with the following table:

HIGH-VOLTAGE MINIMUM FREE DISTANCES (MFD)

Wall/cover thickness (in)	Steel MFD (in)			Aluminum MFD (in)		
	A [1]	B [2]	C [3]	A [1]	B [2]	C [3]
¼	2.8	4.3	5.8	[4] NA	[4] NA	[4] NA
⅜	1.8	2.3	3.9	8.6	12.8	18.1
½	* 1.2	2.0	2.7	6.5	9.8	13.0
⅝	* 0.9	1.5	2.1	5.1	7.7	10.4
¾	* 0.6	* 1.1	1.6	4.1	6.3	8.6
1	*	* 0.6	* 1.0	2.9	4.5	6.2

Note *: The minimum electrical clearances must still be maintained in accordance with the minimum clearance table of § 18.24.
[1] Column A specifies the MFD for enclosures that have available three-phase bolted short-circuit currents of 10,000 amperes rms or less.
[2] Column B specifies the MFD for enclosures that have a maximum available three-phase bolted short-circuit currents greater than 10,000 and less than or equal to 15,000 amperes rms.
[3] Column C specifies the MFD for enclosures that have a maximum available three-phase bolted short-circuit currents greater than 15,000 and less than or equal to 20,000 amperes rms.
[4] Not Applicable—We do not allow aluminum wall or covers to be ¼ inch or less in thickness (See also, § 18.31).

(1) For values not included in the table, the following formulas on which the table is based may be used to determine the minimum free distance.

(i) Steel Wall/Cover:

$$\mathrm{MFD} = 2.296 \times 10^{-6} \frac{(35 + 105\,(\mathrm{C}))\,(\mathrm{I_{sc}})\,(\mathrm{t})}{(\mathrm{C})\,(\mathrm{d})} - \frac{\mathrm{d}}{2}$$

(ii) Aluminum Wall/Cover:

$$\mathrm{MFD} = 1.032 \times 10^{-5} \frac{(35 + 105\,(\mathrm{C}))\,(\mathrm{I_{sc}})\,(\mathrm{t})}{(\mathrm{C})\,(\mathrm{d})} - \frac{\mathrm{d}}{2}$$

Where ''C'' is 1.4 for 2,400 volt systems or 3.0 for 4,160 volt systems, ''I_{sc}'' is the three-phase short circuit current in amperes of the system, ''t'' is the clearing time in seconds of the outby circuit-interrupting device and ''d'' is the thickness in inches of the metal wall/cover adjacent to an area of potential arcing.

(2) The minimum free distance must be increased by 1.5 inches for 4,160 volt systems and 0.7 inches for 2,400 volt systems when the adjacent wall area is the top of the enclosure. If a steel shield is mounted in conjunction with an aluminum wall or cover, the thickness of the steel shield is used to determine the minimum free distances.

(l) *Static pressure testing of explosion-proof enclosures containing high-voltage switchgear.* (1) *Prototype enclosures.* The following static pressure test must be performed on each prototype design of explosion-proof enclosure(s) containing high-voltage switchgear prior to the explosion test(s).

(i) *Test procedure.*

(A) The enclosure must be internally pressurized to at least the design pressure, maintaining the pressure for a minimum of 10 seconds.

(B) Following the pressure hold, the pressure must be removed and the pressurizing agent removed from the enclosure.

(ii) *Acceptable performance.*

(A) The enclosure during pressurization must not exhibit—

(*1*) Leakage through welds or casting; or

(*2*) Rupture of any part that affects the explosion-proof integrity of the enclosure.

(B) The enclosure following removal of the pressurizing agents must not exhibit—

(*1*) Visible cracks in welds;

(*2*) Permanent deformation exceeding 0.040 inches per linear foot; or

(*3*) Excessive clearances along flame-arresting paths following retightening of fastenings, as necessary.

(2) *Enclosures for production.* Every explosion-proof enclosure containing high-voltage switchgear manufactured after the prototype was tested must undergo one of the following tests or procedures:

(i) The static pressure test specified in paragraph (l)(1)(i) of this section; or

(ii) An MSHA-accepted quality assurance procedure covering inspection of the enclosure.

(A) The quality assurance procedure must include a detailed check of parts against the drawings to determine that—

(*1*) The parts and the drawings coincide; and

(*2*) The minimum requirements stated in part 18 have been followed with respect to materials, dimensions, configuration and workmanship.

(B) [Reserved]

PART 75—MANDATORY SAFETY STANDARDS—UNDERGROUND COAL MINES

3. The authority citation for part 75 continues to read as follows:

Authority: 30 U.S.C. 811.

4. Add §§ 75.823 through 75.833 to subpart I, Underground High-Voltage Distribution, to read as follows:

§ 75.823 Scope.

Sections 75.823 through 75.833 of this part are electrical safety standards applicable to high-voltage continuous mining machines and circuits. A ''qualified person'' within the meaning of these sections is a person qualified under § 75.153. Other standards in 30 CFR apply to these circuits and equipment where appropriate.

§ 75.824 Electrical protection.

(a) Trailing cable protection. The trailing cable extending to the high-voltage continuous mining machine must be provided with short circuit, overload, ground-fault, and undervoltage protection by a circuit-interrupting device of adequate interrupting capacity and voltage as follows:

(1) Short-circuit protection.

(i) The current setting must be either the setting specified in approval documentation or 75 percent of the minimum available phase-to-phase short-circuit current, whichever is less; and

(ii) The time-delay setting must be either the setting specified in approval documentation or 0.050 second, whichever is less.

(2) Ground-fault protection.

(i) A neutral grounding resistor must limit the ground-fault current to no more than 0.5 ampere.

(ii) A ground-fault device must cause de-energization of the circuit extending to the continuous mining machine at not more than 0.125 ampere. The time-delay of the device must not exceed 0.050 second.

(iii) A look-ahead circuit must detect a ground fault condition and prevent the circuit-interrupting device from closing as long as the ground-fault condition exists.

(iv) A backup ground-fault device must cause de-energization of the circuit extending to the continuous mining machine at not more than 40 percent of the voltage developed across the neutral grounding resistor when a ground fault occurs with the neutral grounding resistor open. The time-delay setting of the backup device must not exceed 0.25 second.

(v) A thermal device must detect a sustained ground fault current in the neutral grounding resistor and must de-energize the incoming power. The device must operate at either 50 percent of the maximum temperature rise of the neutral grounding resistor or 302° F (150° C), whichever is less. Thermal protection must not be dependent upon control power and may consist of a current transformer and overcurrent relay in the neutral grounding resistor circuit.

(vi) A single window-type current transformer that encircles all three-phase conductors must be used to activate the ground-fault device specified in paragraph (a)(2)(ii) of this section. The equipment grounding conductor(s) must not pass through the ground-fault current transformer.

(vii) A test circuit for the ground-fault device specified in paragraph (a)(2)(ii) of this section must be provided. The test circuit must inject no more than 50 percent of the current rating of the neutral grounding resistor through the current transformer. When the test circuit is activated, the circuit-interrupting device must open.

(3) Undervoltage protection. The undervoltage device must operate on a loss of voltage, de-energize the circuit, and prevent the equipment from automatically restarting.

(b) *Reclosing.* Circuit-interrupting devices must not reclose automatically.

(c) *Onboard Power Circuits.* When a grounded-phase indicator light on a high-voltage continuous mining machine indicates a grounded-phase fault, the following procedures must be implemented:

(1) The continuous mining machine must be moved immediately to a location with a properly supported roof; and

(2) The grounded-phase must be located and corrected prior to placing the continuous mining machine back into operation.

§ 75.825 Power centers.

(a) *Main disconnecting switch.* The power center supplying high voltage power to the continuous mining machine must be equipped with a main disconnecting switch that, when in the open position, de-energizes the input to all power transformers.

(b) *Trailing cable disconnecting devices.* In addition to the requirements of paragraph (a) of this section, the power center must be equipped with a disconnecting device for each circuit that can supply power to the high-voltage continuous mining machine.

(c) *Disconnecting switches.* Each disconnecting switch required in paragraphs (a) and (b) of this section must be designed, installed, and perform as follows:

(1) Rated for the maximum phase-to-phase voltage of the circuit;

(2) Rated for the full-load current of the circuit that is supplied power through the device.

(3) Visual observation can be performed to see that the contacts are open without removing any covers;

(4) Grounds all power conductors on the load side when the device is in the ''open and grounded'' position;

(5) Can only be locked in the ''open and grounded'' position;

(6) Safely interrupts the full-load current of the circuit or designed to cause the current to be interrupted automatically prior to opening the disconnecting switch; and

(7) Labeled to clearly identify the circuit it disconnects.

(d) *Barriers and covers.* All compartments that provide access to high-voltage conductors or parts, must have barriers and covers to prevent miners from contacting energized high-voltage conductors or parts.

(e) *Main disconnecting switch and control circuit interlocking.* The power center control circuit must be interlocked with the main disconnecting switch in the power center so that:

(1) When the main disconnecting switch is in the ''open'' position, the control circuit can only be powered through an auxiliary switch in the ''test'' position; and

(2) When the main disconnecting switch is in the ''closed'' position, the control circuit can only be powered through an auxiliary switch in the ''normal'' position.

(f) *Interlocks.* Each cover or removable barrier providing access to high-voltage

conductors or parts must be equipped with at least two interlock switches. Removal of any of these covers or barriers exposing energized high-voltage conductors or parts must cause the interlock switches to automatically de-energize the incoming high-voltage to the power center.

(g) *Emergency stop switch.* The power center must be equipped with an externally accessible emergency stop switch hard-wired into the incoming ground-wire monitor circuit that de-energizes the incoming high-voltage in the event of an emergency.

(h) *Grounding stick.* The power center must be equipped with a grounding stick to discharge the high-voltage capacitors and circuits. The power center must have a label readily identifying the location of the grounding stick. The grounding stick must be stored in a dry location.

(i) *Caution labels.* All compartments providing access to energized high-voltage conductors and parts must display a caution label to warn miners against entering the compartment(s) before de-energizing incoming high-voltage circuits.

§ 75.826 High-voltage trailing cables.

High-voltage trailing cables must—

(a) Comply with § 18.35 and § 18.54 of this title; and

(b) Meet either the requirements of § 75.804 or be a type SHD cable with a center ground-check conductor not smaller than a No. 16 A.W.G. stranded conductor.

§ 75.827 Installation and guarding of trailing cables.

(a) *Trailing cable installation.* The portion of the high-voltage cable from the power center to the following locations must be either supported on insulators, or located in an unused entry that is provided with barricade tape and warning signs to warn mobile equipment operators against traveling into the entry:

(1) To the last open crosscut during advance mining;

(2) To 150 feet outby any pillar workings during second mining; or

(3) To 150 feet of the continuous mining machine when the machine is used in outby areas or trammed in or out of the mine or from section to section.

(b) *Temporary storage of cables.* Temporary lacing of the cable into a sled or crosscut in areas specified in paragraphs (a)(1) to (a)(3) of this section is permitted. Warning signs and barricade tape must be placed around the sled or at the entrances to the crosscut to restrict mobile equipment travel.

(c) *Guarding.* (1) The high-voltage cable must be guarded in the following locations:

(i) Between the power center and the first cable insulator, if supported, or between the power center and where the cable enters into the unused entry;

(ii) From the entrance gland for a minimum distance of 10 feet outby the last strain clamp on the continuous mining machine; and,

(iii) At any location where the cable may be damaged by moving equipment.

(2) Guarding must be constructed using nonconductive flame-resistant material or grounded metal.

(d) *Suspended cables and cable crossovers.* (1) When equipment must cross any portion of the high-voltage trailing cable in or inby the last open crosscut, the cable must be protected from damage by either:

(i) Suspending it from the mine roof; or

(ii) Protecting it by using a commercially available cable crossover.

(2) The crossover must have the following specifications:

(i) A minimum length of 33 inches;

(ii) A minimum width of 17 inches;

(iii) A minimum height of 3 inches;

(iv) A minimum cable placement area of two and one half-inches (2 ½″) high by four and one-quarter inches (4 ¼″) wide;

(v) Made of nonconductive material;

(vi) Made of material with a distinctive color. The color black must not be used; and

(vii) Made of material that has a minimum compressive strength of 6,400 pounds per square inch (psi).

§ 75.828 Trailing cable handling and pulling.

(a) *Handling.* Miners must not handle the energized trailing cable unless they are wearing properly tested and rated insulating gloves as specified in § 75.833. If mitts, hooks, tongs, slings, aprons, or other personal protective equipment are used to handle energized cables, high-voltage insulating gloves must be used in conjunction to provide protection against shock hazards.

(b) *Pulling.* The trailing cable must be de-energized prior to being pulled by any equipment other than the continuous mining machine. Cable manufacturers' recommended pulling procedures must be followed when pulling the trailing cable with such equipment.

§ 75.829 Tramming continuous mining machines in and out of the mine, and from section to section.

(a) *Conditions of use.* When tramming the continuous mining machine in and out of the mine, and from section to section, the following requirements apply:

(1) The power source must not be located in areas where permissible equipment is required;

(2) The continuous mining machine must not be used for mining or cutting purposes. This provision applies when using power sources specified in paragraphs (c)(1), (c)(2), and (c)(3) of this section;

(3) Low-, medium-, and high-voltage cables must comply with §§ 75.600–1, 75.907, and 75.826, respectively; and

(4) The energized high-voltage cable must be mechanically secured on-board the continuous mining machine. This provision applies only when using power sources specified in paragraphs (c)(2) and (c)(3) of this section.

(b) *Testing prior to tramming.* Prior to tramming the continuous mining machine—

(1) A qualified person must activate the ground-fault and ground-wire monitor test circuits of the power sources specified in paragraph (c) of this section to ensure that they pass a functional test. Corrective actions and recordkeeping resulting from these tests must be in accordance with § 75.832(f) and (g), respectively.

(2) Where applicable, a responsible person must activate the test circuit for the grounded-phase detection circuit on the continuous mining machine to ensure that the detection circuit is functioning properly. Corrective actions resulting from this test must be in accordance with § 75.832(f).

(c) *Power sources.* In addition to the power center specified in § 75.825, the following are acceptable power sources that may be used to tram the continuous mining machine.

(1) *Medium-voltage power source.* A medium-voltage power source that supplies 995 volts through a trailing cable (*See* Figure 1 of this section). The medium-voltage power source must—

(i) Not be used to back-feed the high-voltage circuits of the continuous mining machine;

(ii) Comply with all applicable requirements for medium-voltage circuits in 30 CFR part 75; and

(iii) Not be moved when energized if the power source is a portable transformer.

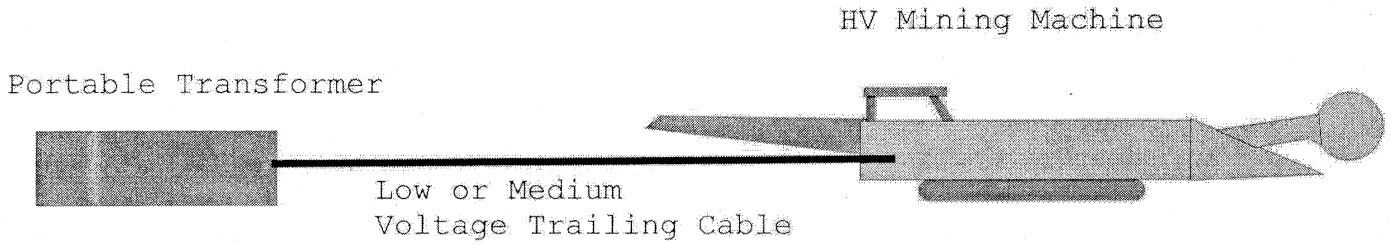

Figure 1-Power Source-75.829(c)(1) 995 volts used for tramming

(2) *Onboard step-up transformer.* A temporary transformer that steps up the low- or medium-voltage to high voltage (*See* Figure 2 in this section). The temporary transformer must comply with the following:

(i) The input trailing cable supplying either low- or medium-voltage to the step-up transformer must comply with the applicable sections of 30 CFR part 75;

(ii) The high-voltage circuit supplying power to the continuous mining machine must comply with § 75.824.

(iii) The step-up transformer enclosure must be—

(A) Securely mounted on-board the continuous mining machine and installed to minimize vibration;

(B) Grounded using all of the following methods:

(*1*) Connected to the incoming ground wire of the low- or medium-voltage trailing cable.

(*2*) Bonded by a No. 1/0 A.W.G. or larger external grounding conductor to the continuous mining machine frame.

(*3*) Bonded by a No. 1/0 A.W.G. or larger external grounding conductor to the metallic shell of cable couplers; and

(C) Equipped with at least two interlock switches on every removable cover and an externally accessible emergency stop switch to remove input power.

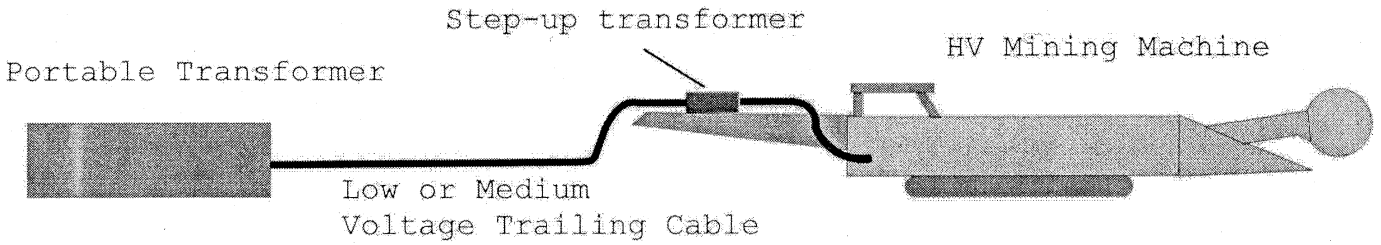

Figure 2-Power Source-75.829(c)(2) 480 or 995 volts to a step-up transformer to 2300 volts for tramming

(3) *Diesel-generator set.* A high-voltage diesel-generator set (*See* Figures 3 or 4 in this section) must comply with the following:

(i) Contain a neutral grounding resistor(s) rated for the maximum voltage created when ground-fault conditions occur and to limit the ground-fault current to no more than 0.5 ampere. Neutral grounding resistor(s) must be located:

(A) Between the wye connected generator neutral and the generator frame; and

(B) Between the wye connected transformer secondary and the transformer frame, when a transformer is used.

(ii) Have a No. 1/0 A.W.G. or larger external grounding conductor to ground the continuous mining machine frame to the following:

(A) The frame of the generator;

(B) The frame of the transformer, when used; and

(C) The metallic shell of each cable coupler.

(iii) Be connected by a tow-bar and in close proximity to the continuous mining machine to prevent free movement of the generator set;

(iv) Have each three-phase output circuit equipped with a device with no intentional time-delay that causes the circuit breaker to trip and to shut-down the diesel engine when a phase-to-frame fault of 0.125 ampere or greater occurs. The ground-fault protection must use a single window-type current transformer that encircles all three phase-conductors. The equipment grounding conductor(s) must not pass through the ground-fault current transformer.

(v) Have each three-phase output circuit provided with short-circuit and undervoltage protection, in accordance with §§ 75.824(a)(1) and 75.824(a)(3), respectively.

(vi) Have a test circuit for the ground-fault device specified in paragraph (c)(3)(v) of this section that injects no more than 50 percent of the current rating of the neutral grounding resistor through the current transformer. When the test circuit is activated, the circuit-interrupting device must open.

(vii) Have a legible label(s) placed on each instantaneous trip unit or near each circuit interrupting device showing the maximum circuit interrupting device setting(s).

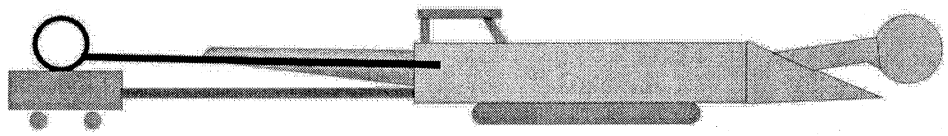

Figure 3-Power Source-75.829(c)(3) Generator used to supply 2300 volts for tramming

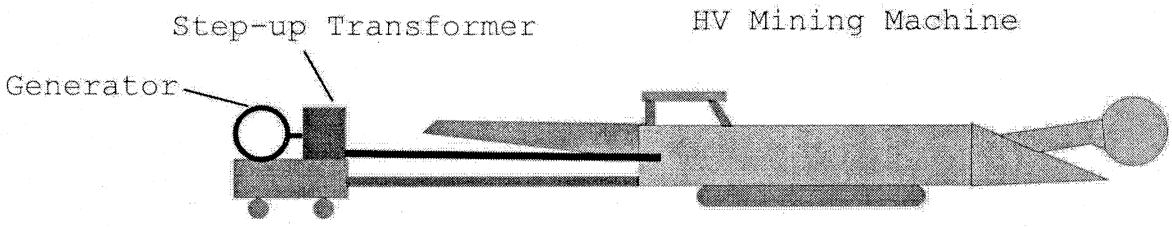

Figure 4-Power Source-75.829(c)(3) Generator Supplies 480/995 volts to step-up transformer for 2300 volts for tramming

§ 75.830 Splicing and repair of trailing cables.

(a) *Splices and repairs.* Splices and repairs to high-voltage trailing cables must comply with the following:

(1) Be made only by a qualified person trained in the proper methods of splicing and repairing high-voltage trailing cables;

(2) Be made in a workman-like manner; and

(3) Be made in accordance with § 75.810.

(b) *Permanent cable repair.* Only MSHA-approved high-voltage kits which include instructions for outer-jacket repairs and splices are acceptable for permanent cable repair.

(c) *Splicing limitations.* Splicing of the high-voltage trailing cable within 35 feet of the continuous mining machine is prohibited.

§ 75.831 Electrical work; troubleshooting and testing.

(a) *Trailing cable and continuous mining machine electrical work procedures.* Prior to performing electrical work on a high-voltage cable or the continuous mining machine, a qualified person must de-energize the power center circuit and comply with paragraph (a)(1) or (2) of this section:

(1) If a trailing cable disconnecting switch is provided:

(i) Open, lock, and tag the disconnecting switch; and

(ii) Lock and tag the plug to the power receptacle.

(2) If a trailing cable disconnecting switch is not provided and a cable coupler is used as a disconnecting device:

(i) Remove the plug from the power receptacle and connect it to the grounding receptacle;

(ii) Lock and tag the plug to the grounding receptacle; and

(iii) Place a dust cover over the power receptacle.

(b) *Trailing cable grounding.* Prior to testing and troubleshooting trailing cables, a qualified person must de-energize the trailing cable circuit as required in paragraph (a) of this section, and comply with either of the following work procedures:

(1) If a trailing cable disconnecting switch is provided:

(i) Open, lock, and tag the disconnecting switch;

(ii) Disconnect the plug from the power receptacle;

(iii) Lock and tag the plug; and

(iv) Place a dust cover over the power receptacle.

(2) If a trailing cable disconnecting switch is not provided and a cable coupler is used as a disconnecting device:

(i) Remove the plug from the power receptacle and connect it to the grounding receptacle;

(ii) Remove the plug from the grounding receptacle, then install a lock and tag to the plug; and

(iii) Place a dust cover over the power receptacle.

(c) *Trailing cable troubleshooting.* During troubleshooting and testing, the de-energized high-voltage cable may be ungrounded only for that period of time necessary to locate the defective condition. Electrical work or repairs to the trailing cable must be made in accordance with paragraph (a) of this section.

(d) *Troubleshooting and testing limitations.* Before troubleshooting or testing a low- or medium-voltage circuit contained in an enclosure with exposed high-voltage conductors or parts, the high-voltage circuit must be de-energized, grounded, locked-out, and tagged in accordance with paragraphs (a) and (e) of this section, whichever is applicable. Troubleshooting and testing energized circuits must be performed only—

(1) On low- and medium-voltage circuits;

(2) When the purpose of troubleshooting and testing is to determine voltages and currents; and

(3) By qualified persons who wear protective gloves on circuits that exceed 40 volts in accordance with the following table:

Circuit voltage	Type of glove required
(i) Greater than 120 volts (nominal) (not intrinsically safe)	Rubber insulating gloves with leather protectors.
(ii) 40 volts to 120 volts (nominal) (both intrinsically safe and non-intrinsically safe).	Either rubber insulating gloves with leather protectors or dry work gloves.
(iii) Greater than 120 volts (nominal) (intrinsically safe)	Either rubber insulating gloves with leather protectors or dry work gloves.

(e) *Power center electrical work procedures.* Before any work is performed inside any compartment of the power center, except for troubleshooting and testing energized circuits as provided for in paragraph (d) of this section, a qualified person must—

(1) De-energize the affected circuit;

(2) Open the corresponding disconnecting switch to ensure the circuit is isolated;

(3) Visually verify that the contacts of the disconnecting switch are open and grounded;

(4) Lockout and tag the disconnecting switch with a lock; and

(5) Discharge all high-voltage capacitors.

(f) *Lockout and tagging responsibilities.* (1) When one or more qualified person(s) is performing work specified in this section, each person must install an individual lock. Locks and tags must be removed only by the persons who installed them.

(2) If the person who installed the lock and tag is unavailable, the lock and tag may be removed by a person authorized by the operator, provided—

(i) The authorized person is a qualified person; and

(ii) The mine operator ensures that the person who installed the lock and tag is aware that the lock has been removed.

§ 75.832 Frequency of examinations; recordkeeping.

(a) *Continuous mining machine examination.* At least once every 7 days, a qualified person must examine high-voltage continuous mining machines to determine that electrical protection, equipment grounding, permissibility, cable insulation, and control devices are properly installed and maintained.

(b) *Ground-fault test.* At least once every 7 days, and prior to tramming the high-voltage continuous mining machine, a qualified person must activate the ground-fault test circuit required in § 75.824(a)(2)(vii) and in § 75.829(b)(1) to verify that it will cause the corresponding circuit-interrupting device to open.

(c) *Ground-wire monitor test.* At least once every 7 days, and prior to tramming the high-voltage continuous mining machine, a qualified person must examine and test each high-voltage continuous mining machine ground-wire monitor circuit to verify that it will cause the corresponding circuit-interrupting device to open.

(d) *Trailing cable inspections.* (1) Once each production day, a qualified person must de-energize and inspect the entire length of the high-voltage trailing cable from the power center to the continuous mining machine. The inspection must include the outer jacket repairs, all splices, and areas where guarding is required.

(2) At the beginning of each production shift, a responsible person designated by the mine operator must de-energize the high-voltage trailing cable and visually inspect for damage to the outer jacket, from the continuous mining machine to the following locations:

(i) The last open crosscut;

(ii) Within 150 feet of the working place during retreat or second mining; or

(iii) Up to 150 feet of the continuous mining machine when the machine is used in outby areas.

(e) *Grounded-phase detection test.* When a grounded-phase test circuit is provided on a high-voltage continuous mining machine, a responsible person designated by the mine operator must activate the test circuit at the beginning of each production shift to ensure that the detection circuit is functioning properly.

(f) *Corrective action.* When examinations or tests of equipment reveal a potential fire, electrical shock, ignition, or operational hazard, the equipment must be immediately removed from service or repaired.

(g) *Record of tests.* At the completion of examinations and tests required under paragraphs (a), (b), and (c) of this section, the person conducting such examinations and tests must certify by signature and date that they have been conducted. Also, a record must be made of any unsafe condition found when conducting the examinations and tests under paragraphs (a), (b), and (c) of this section and any corrective action taken. Certifications and records must be kept for at least 1 year, and must be made available for inspection by authorized representatives of the Secretary and representatives of miners.

§ 75.833 High-voltage insulating gloves used for handling high-voltage trailing cables.

(a) Each mine operator must make high-voltage insulating gloves available to miners handling energized high-voltage trailing cables.

(b) High-voltage insulating gloves must have a voltage rating of at least Class 1 (7,500 volts) that meets or exceeds ASTM F496–02a, ''Standard Specification for In-Service Care of Insulating Gloves and Sleeves'' (2002). The Director of the Federal Register approves this incorporation by reference in accordance with 5 U.S.C. 552(a) and 1 CFR part 51. You may inspect a copy at any of the following locations: MSHA Coal Mine Safety and Health District office; at the Office of Standards, Regulations, and Variances, 1100 Wilson Boulevard, Arlington, VA; or at the National Archives and Records Administration (NARA). For more information on the availability of this material at NARA, call 202–741–6030, or go to: *http://www.archives.gov/federal_register/code_of_federal_regulations/ibr_locations.html.* You may also purchase a copy from the American Society for Testing and Materials, 100 Barr Harbor Drive, West Conshohocken, Pennsylvania 19428–2959.

(c) The rubber glove portion of the high-voltage glove must be air-tested at the beginning of each shift to ensure its effectiveness.

(d) Both the leather protector and rubber insulating gloves must be visually examined before each use for signs of damage or defects.

(e) Damaged rubber gloves must be removed from the underground area of the mine or destroyed. Leather protectors must be maintained in good condition or replaced.

(f) The high-voltage insulating gloves must be electrically tested every 30 days in accordance with publication ASTM F496–02a, ''Standard Specification for In-Service Care of Insulating Gloves and

Sleeves'' (2002), as incorporated by reference in paragraph (b) of this section.

5. Add § 75.1002(b)(5) to read as follows:

§ 75.1002 Installation of electric equipment and conductors; permissibility.

* * * * *

(b) * * *

(5) Shielded high-voltage cables supplying power to permissible continuous mining machines.

[FR Doc. 04–15841 Filed 7–15–04; 8:45 am]

BILLING CODE 4510–43–P

Federal Register

Friday,
July 16, 2004

Part III

Department of Labor

Mine Safety and Health Administration

30 CFR Part 48

Training Standards for Shaft and Slope Construction Workers at Mines; Proposed Rule

DEPARTMENT OF LABOR

Mine Safety and Health Administration

30 CFR Part 48

RIN 1219–AB35

Training Standards for Shaft and Slope Construction Workers at Mines

AGENCY: Mine Safety and Health Administration, Labor.

ACTION: Proposed rule; notice of public hearings and close of record.

SUMMARY: We propose to revise certain provisions of our regulations addressing Training and Retraining of Miners, 30 CFR part 48. The proposed rule would remove the part 48 training exclusion for shaft and slope construction workers. Under this proposed rule, shaft and slope construction workers at surface and underground coal and metal and nonmetal mines would be treated like extraction and production miners and subject to the part 48 training requirements. The fatal accident history shows that requiring part 48 training would be beneficial for shaft and slope construction workers in order to help prevent mining accidents.

DATES: Comments on this proposed rule and on the information collection requirements must be received on or before September 14, 2004.

The public hearing dates and locations are listed in the Public Hearings section under **SUPPLEMENTARY INFORMATION.** Individuals or organizations wishing to make oral presentations for the record should submit a request at least 5 days prior to the hearing dates.

ADDRESSES: You may submit comments, by any of the following methods:

- Federal eRulemaking Portal: *http://www.regulations.gov.* Follow the instructions for submitting comments.
- E-mail: *Comments@MSHA.gov.* Include RIN 1219–AB35 in the subject line of the message.
- Fax: (202) 693–9441.
- Mail/Hand Delivery/Courier: MSHA, Office of Standards, Regulations, and Variances, 1100 Wilson Blvd., Room 2350, Arlington, Virginia 22201–3939.

Instructions: All submissions must reference MSHA and RIN 1219–AB35, (the Regulatory Information Number for this rulemaking).

Docket: To access comments received, go to *http://www.msha.gov* or MSHA, Office of Standards, Regulations, and Variances, 1100 Wilson Blvd., Room 2350, Arlington, Virginia. All comments received will be posted to *http://www.msha.gov.*

Information Collection Requirements:

Comments concerning information collection requirements must be clearly identified as such and sent to both MSHA and the Office of Management and Budget (OMB) as follows:

(1) Send information collection comments to MSHA at the address above.

(2) Send comments to OMB by regular mail addressed to the Office of Information and Regulatory Affairs, Office of Management and Budget, New Executive Office Building, 725 17th Street, NW., Washington, DC 20503, Attn: Desk Officer for MSHA.

FOR FURTHER INFORMATION CONTACT: Marvin W. Nichols, Jr., Director, Office of Standards, Regulations and Variances, MSHA; 1100 Wilson Boulevard, Room 2350, Arlington, Virginia 22209–3939; telephone (202) 693–9440; facsimile (202) 693–9441; or e-mail: *nichols.marvin@DOL.gov.*

SUPPLEMENTARY INFORMATION:

I. Public Hearings

The public hearings will begin at 9 a.m. and will end after the last scheduled speaker testifies. The hearings will be held on the following dates at the locations indicated:

Date	Location	Telephone
August 24, 2004	Little America Hotel, 500 S Main Street, Salt Lake City, UT 84101	(801) 363–6781
August 26, 2004	U.S. Department of Labor, Mine Safety and Health Administration, 1100 Wilson Boulevard, MSHA Conference Room, 25th Floor, Arlington, VA 22209.	(202) 693–9440

The hearings will begin with an opening statement from MSHA, followed by an opportunity for members of the public to make oral presentations. You do not have to make a written request to speak. Speakers will speak in the order that they sign in. Any unalloted time will be made available for person making same-day requests. At the discretion of the presiding official, the time allocated to speakers for their presentation may be limited. Speakers and attendees may also present information to the MSHA panel for inclusion in the rulemaking record.

The hearings will be conducted in an informal manner. The hearing panel may ask questions of speakers. Although formal rules of evidence or cross examination will not apply, the presiding official may exercise discretion to ensure the orderly progress of the hearing and may exclude irrelevant or unduly repetitious material and questions.

A verbatim transcript of the proceedings will be included in the rulemaking record. Copies of this transcript will be available to the public, and can be viewed at *http://www.msha.gov.*

We will accept post-hearing written comments and other appropriate data for the record from any interested party, including those not presenting oral statements, prior to the close of the comment period on September 14, 2004.

II. Background

Section 115 (a) of the Federal Mine Safety and Health Act of 1977 (Mine Act), 30 U.S.C. 825, directed the Secretary of Labor to promulgate regulations concerning health and safety training programs for miners. Section 115(d) states that the Secretary of Labor ''shall promulgate appropriate standards for safety and health training for coal or other mine construction workers.'' On October 13, 1978, we published regulations for the training of miners in 30 CFR part 48 (43 FR 47453). The regulations prescribe the training that miners, including short-term specialized contract miners, must receive before working in surface or underground mines. In existing § 48.2(a)(1)(i), underground shaft and slope workers and workers engaged in construction activities ancillary to shaft and slope sinking are exempted from the training regulations. In existing § 48.22(a)(1)(i), surface shaft and slope workers are exempted from the training regulations.

III. Discussion and Summary of the Proposed Rule

A. General Discussion

Based on the assumption that shaft and slope construction was substantively different from extraction and production mining, we determined at the time of promulgation of part 48 in 1978 that the training for miners was not appropriate for shaft and slope work. At that time, commenters suggested that only those workers

regularly exposed to the many hazards associated with mining needed the full range of training. As such, shaft and slope construction workers and workers engaged in construction activities ancillary to shaft and slope sinking were excluded from the training regulations.

After reviewing the reports of fatal accidents from 1982 through August 2003, we believe that miners performing shaft and slope construction work should receive the same training as other underground and surface miners. From 1982 through August 2003, there were 15 fatalities in shaft and slope construction. This number includes the three miners killed in a shaft construction accident at the McElroy Mine, in West Virginia, in January 2003. A review of these accidents, and a review of shaft and slope tasks and operations, reveal two important factors: (1) The hazards that confront these workers are generally no different from hazards faced by all other underground or surface miners; and (2) while we recognize that there are some specialized shaft and slope tasks, shaft and slope construction workers perform a number of tasks that are similar to, or the same as, tasks performed by miners already covered by part 48 training. These tasks include drilling, blasting, mucking, welding and making gas examinations. In fact, in some instances, slope construction is being done by experienced miners using conventional mining equipment and methods.

After reviewing fatal accidents involving shaft and slope construction workers, we have concluded that miners performing shaft and slope construction should be trained like other underground and surface miners. From 1982 to August 2003, the coal mining industry recorded 43 methane ignitions during shaft or slope construction, 37 of these occurred while welding or cutting activities were being performed. In 1992, four miners were killed as the result of an ignition and in 2003, three miners were killed from an ignition. Eight additional shaft and slope construction fatal accidents also occurred during this period. Hoisting accounted for seven fatalities. Four of these involved victims falling from a platform or bucket which had become unstable; one victim was struck by a falling object; and two were hit by a shaft sinking bucket as it was being lowered. Another fatality occurred at a shaft construction site when a miner who was not tied-off fell down a shaft that did not have acceptable protection. These fatal accidents, involving falls, explosions, and impact, are similar to the accidents of other miners.

Effective training can better prevent such accidents. Part 48 is designed to impart the necessary knowledge and skills so that miners can work safely. Part 48 contains programs of new miner, experienced miner, task, annual refresher and hazard training. The training, for example, covers the work environment, mine conveyances, ground control plans, hazard recognition, mine gases, safe work procedures, and health and safety aspects of tasks. The training also addresses detecting and working safely around methane, tying-off properly to avoid falling, and working in clear areas to avoid being struck by overhead objects. Part 48 is flexible and adaptable to a variety of mining conditions, processes, and operations.

We are aware that some shaft and slope contractors already provide part 48 training to their shaft and slope workers. The proposed rule would assure, however, that complete training suitable to the hazards encountered is given on a timely basis. The proposed rule would require that training be given annually and upon a new assignment so that safety skills are maintained and enhanced. After the rule is published, MSHA will conduct outreach efforts to assist with the particular training needs of each shaft and slope operation.

The proposed rule would provide better training coverage and consistency for shaft and slope construction workers who have been excluded from the training requirements, and, therefore, improve miner safety and health. This proposed rule would be fully compliant with Section 101(a)(9) of the Mine Act, which requires that ''no mandatory health or safety standard promulgated * * * shall reduce the protection afforded miners by an existing * * * standard.''

B. Section-by-Section Analysis

1. Sections 48.2(a)(1)(i)/48.22(a)(1)(i) Definitions

The existing definitions of ''miner'' in §§ 48.2(a)(1)(i) and 48.22(a)(1)(i) exclude ''shaft and slope workers'' and ''workers engaged in construction activities ancillary to shaft and slope sinking.'' We propose to amend the definitions of ''miner'' to include shaft and slope workers and workers engaged in construction activities ancillary to shaft and slope sinking. The proposed rule would encompass all miners engaged in ''shaft or slope construction.'' Consequently, shaft and slope workers would be required to receive new miner, experienced miner, task, annual refresher and hazard training, as applicable.

The proposed rule would retain the training exclusion for mine construction workers, other than shaft and slope workers, and the reference to ''subpart C,'' which is reserved for any separate mine construction training rule. The agency is setting aside the training coverage of the other mine construction workers for future rulemaking, as appropriate.

The proposed rule would also extend the short-term specialized contractor provision in §§ 48.2(a)(1) and 48.22(a)(1) to include shaft and slope construction workers. Shaft and slope construction workers may move from site to site. This provision would require short-term specialized contract workers who have received experienced miner training to receive hazard training at each new site.

We believe that most workers engaged in shaft and slope construction would be subject only to part 48 subpart A—Training and Retraining of Underground Miners, because typically most shaft and slope construction is performed underground. Subpart A training includes instruction in the mandatory health and safety standards applicable to the task. This instruction is not limited to underground standards but pertains to all standards that apply. Thus the subpart A training can cover the standards found in 30 CFR part 77 for shaft and slope sinking operations. If these miners are assigned a surface mining task, however, their subpart A training would be supplemented with surface task training under part 48 subpart B—Training and Retraining of Miners Working at Surface Mines and Surface Areas of Underground Mines.

Shaft and slope construction workers who work exclusively on the surface would be trained under subpart B only. Shaft and slope construction workers who divide their time on the surface and underground would be subject to training under both subparts A and B.

2. Sections 48.2(b)(4)/48.22(b)(4)

We would amend § 48.2(b) and § 48.22(b) to add a new paragraph (b)(4) to consider miners working as shaft and slope construction workers on the effective date of the final rule to be ''experienced miners'' under part 48. This requirement would preclude operators from having to interrupt scheduled operations to provide training for these miners. The workforce and current projects, therefore, would not be disrupted because of the rule.

3. Sections 48.3/48.23 Training Plans; Time of Submission; Where Filed; Information Required; Time for Approval; Method for Disapproval; Commencement of Training; Approval of Instructors

We are proposing to amend § 48.3 and § 48.23 to add a new paragraph (o). Paragraph (o) would address shaft and slope construction training plans.

In general, the training plan is used by the mine operator to list the MSHA-approved instructors and provide a description of the teaching methods and the course materials. Each training plan must be approved before it can be used to conduct part 48 training.

Proposing a new paragraph (o) would allow shaft and slope operators 120 days from the date the final rule is published to submit a training plan. We would approve the plan or grant an extension within 60 days.

Existing paragraph (a) in § 48.3 and § 48.23 would be amended to refer to new paragraph (o).

4. Sections 48.8/48.28 Annual Refresher Training of Miners; Minimum Courses of Instruction; Hours of Instruction

We propose to amend existing paragraph (d). The existing paragraph established an annual refresher date for coal supervisors who had not previously been required to receive annual refresher training. This paragraph is no longer necessary and would be deleted because the time for compliance in 1999 is long past, and the provision serves no continuing purpose.

Proposed paragraph (d) would require all shaft and slope construction workers employed on the effective date of the final rule to receive annual refresher training no later than 12 months from the effective month of the rule. This would help ensure that the shaft and slope workers receive this training within the year and establish an initial anniversary date. Consistent with our existing policy, operators would be permitted to provide the annual refresher training at any time during the last calendar month of the miners' annual refresher training cycle.

5. Effective Date

Under the proposed rule, the final rule would be effective 180 days after publication, except that sections 48.3(o) and 48.23(o), pertaining to submitting a training plan to us for approval, would be effective on the publication date of the final rule.

IV. Regulatory Impact Analysis

A. Executive Order 12866 (Regulatory Planning and Review and Regulatory Flexibility Act

Executive Order (E.O.) 12866 as amended by E.O. 13258 requires that regulatory agencies assess both the costs and benefits of intended regulations. We have fulfilled this requirement for the proposed rule, and have determined that the proposed rule would not have an annual effect of $100 million or more on the economy. Therefore, it is not an economically significant regulatory action pursuant to section 3(f)(1) of E.O. 12866. Although this proposed rule is not an economically significant action, we have completed a preliminary Regulatory Economic Analysis (PREA) in which the economic impact of the proposed rule is estimated. For a complete breakdown of the compliance costs for this proposed rule see Chapter IV of the PREA. The PREA is summarized as follows:

1. Compliance Costs

We have estimated the costs that shaft and slope construction contractors would incur in providing training to shaft and slope construction workers. We anticipate that most shaft and slope construction contractor workers entering the industry would previously have received 32 hours of underground and 24 hours of surface new miner training. In addition, in most cases, mine operators would be responsible for providing hazard training to the shaft and slope contractor employees who are working on their property.

We recognize that shaft and slope construction contractors are mine operators and their contractor workers are miners. For purposes of clarity in this discussion, we refer to shaft and slope construction operators as contractor firms and shaft and slope construction miners as shaft and slope construction workers. The proposed rule would treat shaft and slope construction workers (for training purposes) like other miners already covered under part 48. Shaft and slope construction workers include those who work in underground coal and metal and nonmetal mines and at the surface areas of underground coal and metal and nonmetal mines. For the purposes of the cost analysis, we used our traditional definition of a small contractor firm as one employing fewer than 20 workers, and a large contractor firm as one employing 20 or more workers. Since there were no costs to small coal or metal and nonmetal contractor firms that employ between one to 19 contractor employees, we did not perform a separate impact analysis for that mine size category. To satisfy the requirements of the Small Business Regulatory Enforcement Fairness Act (SBREFA), we only have to consider a subset of the Small Business Administration's (SBA) definition of ''small entities''—contractor firms that employ 20–500 contractor workers.

The total yearly costs of the proposed rule would be about $161,000 for all coal contractor firms and $34,000 for all metal and nonmetal contractor firms. In addition, coal contractor workers would incur yearly costs of about $20,000, and metal and nonmetal contractor workers would incur yearly costs of about $4,000. All cost estimates are presented in 2003 dollars.

2. Feasibility

We have concluded that the requirements of the proposed rule are both technologically and economically feasible. This proposed rule is not a technology-forcing standard and does not involve activities on the frontiers of scientific knowledge. In addition, it would not require the purchase of any machinery or equipment to implement these training plans as prescribed in part 48. Therefore, we have concluded that this proposed rule is technologically feasible.

As previously stated in this chapter, the total costs of the proposed rule are about $161,000 annually for all coal contractor firms and $34,000 annually for all metal and nonmetal contractor firms. We combined coal and metal and nonmetal contractor firms together to estimate the yearly revenues because these contractor firms are not generally limited to one industry, and they could perform shaft and slope construction work at both coal and metal and nonmetal mines. The compliance costs are well under 1 percent of the yearly revenues of $232 million for these contractor firms. We believe this is convincing evidence that the proposed rule is economically feasible.

3. Benefits

From 1982 through August 2003, there were 15 fatalities in shaft and slope construction work. Most recently, three miners were killed in a shaft and slope construction accident in January 2003. In addition, there were 1,830 days-lost injuries reported for shaft and slope workers during that period. The hazards that shaft and slope construction workers face are generally no different from hazards faced by all other underground or surface miners. Current training regulations in 30 CFR part 48 exempt shaft and slope construction workers. We have

determined that the proposed rule, which would remove the language exempting shaft and slope construction workers from being required to take part 48 training, would provide safety benefits by including these workers. Shaft and slope construction workers, for training purposes, would now receive the same type of training provided to other miners working in underground or surface areas of underground mines. Shaft and slope construction workers work in hazardous mining conditions like other miners and often perform work similar to the other miners. Therefore, they should receive the same training.

We assume that the past history of mining fatalities and injuries can be used as a basis to forecast the number of mining fatalities and injuries in future years. We believe that lack of training is a major factor in the number of accidents and injuries involving shaft and slope construction workers. Conversely, we expect that training can contribute significantly to a reduction in accidents, injuries, illnesses, and fatalities by fostering safe work practices, increasing job skills, and enhancing hazard awareness and hazard prevention. The decrease in the number of fatalities and injuries which we have estimated is based on these assumptions.

Safety and health professionals from all sectors of industry recognize that training is a critical element of an effective safety and health program. Training informs miners of safety and health hazards inherent in the workplace and enables them to identify and avoid such hazards. Training further teaches miners health and safety principles and safe operating procedures in performing their work tasks. Training becomes more important with the influx of new and less experienced miners and mine operators, longer work hours to meet demands, and increased demand for contractors who may be less familiar with the dangers on mine property.

We estimate that there are approximately 19 coal and 4 metal and nonmetal operations (contractor firms with 20–500 employees) that employ shaft and slope construction workers. We estimate that compliance with the proposed rule would reduce the number of injuries and fatalities involving shaft and slope construction workers. We estimate that about 0.2 fatalities and 11 days-lost injuries would be prevented each year as a result of the proposed rule.

B. Regulatory Flexibility Act Certification

Pursuant to the Regulatory Flexibility Act of 1980 as amended, we have analyzed the impact of the proposed part 48 rule on small entities. Based on that analysis, we have preliminarily determined that this proposed rule would not have a significant economic impact on a substantial number of small entities. We have certified this finding to the SBA. The factual basis for this certification is discussed in chapter V of the PREA.

For contractors employing 20 to 500 contractor workers, the estimated yearly cost of the proposed rule is about $161,000 for all underground coal contractors. While, for metal and nonmetal contractor firms, the estimated yearly cost is about $34,000. The combined estimated yearly cost of the proposed rule for both coal and metal and nonmetal contractor firms is about $195,000. For both industries, costs as percentage of revenues are well below one percent (0.08 percent for coal contractor firms and 0.02 percent for metal and nonmetal contractor firms) and therefore, we believe it is appropriate to conclude this proposed rule would not have a significant economic impact on a substantial number of small entities.

C. Unfunded Mandates Reform Act of 1995 and Executive Order 12875 (Enhancing the Intergovernmental Partnership)

For purposes of the Unfunded Mandates Reform Act of 1995, as well as E.O. 12875, this proposed rule does not include any Federal mandate that may result in increased expenditures of more than $100 million. We are not aware of any state, local, or tribal governments that either own or operate surface or underground mines.

D. Paperwork Reduction Act of 1995 (PRA)

The proposed part 48 rule has two provisions § 48.3 and § 48.23 that impose a paperwork burden requirement. This requirement does not involve a new training plan. It requires shaft and slope contractor firms to report paperwork burden hours and costs in the same manner as mine operators, and the reporting of this paperwork burden requirement is approved under OMB control number 1219–0009.

Underground coal contractor firms would incur about 171 paperwork burden hours in the first year after the rule takes effect, with associated burden hours costs of $785; underground metal and nonmetal contractor firms would incur about 36 paperwork burden hours with associated burden hours costs of $178 the first year after the rule takes effect.

Underground coal contractor firms would incur about 52 annual burden hours and associated costs of $1,066 starting in year two after the rule takes effect; underground metal and nonmetal contractor firms would incur about 11 annual burden hours and associated costs of $237 starting in year two after the rule takes effect.

E. Executive Order 12630: Governmental Actions and Interference With Constitutionally Protected Property Rights

This proposed rule is not subject to Executive Order 12630 because it does not involve implementation of a policy with takings implications.

F. Executive Order 12988: Civil Justice Reform

We have reviewed Executive Order 12988 and determined that this proposed rule would not unduly burden the Federal court system. We wrote the proposed rule to provide a clear legal standard for affected conduct and reviewed it carefully to eliminate drafting errors and ambiguities.

G. Executive Order 13045: Protection of Children From Environmental Health Risks and Safety Risks

In accordance with Executive Order 13045, we have evaluated the environmental health and safety effects of this proposed rule on children and determined that it would have no adverse affect on children.

H. Executive Order 13175: Consultation and Coordination With Indian Tribal Governments

We certify that the proposed rule would not impose any substantial direct compliance costs on Indian tribal governments.

I. Executive Order 13132: Federalism

We have reviewed this proposed rule in accordance with Executive Order 13132 regarding federalism and have determined that it does not have federalism implications.

J. Executive Order 13211: Actions Concerning Regulations That Significantly Affect Energy Supply, Distribution, or Use

In accordance with Executive Order 13211 we have reviewed this proposed rule and have determined that it would have no adverse effect on the production or price of coal.

Consequently, it would have no significant adverse effect on the supply, distribution, or use of energy.

K. Executive Order 13272: Proper Consideration of Small Entities in Agency Rulemaking

In accordance with Executive Order 13272, we have thoroughly reviewed the proposed rule to assess and take appropriate account of its potential impact on small businesses, small governmental jurisdictions, and small organizations.

L. National Environmental Policy Act

We have reviewed this proposed rule in accordance with the requirements of the National Environmental Policy Act (NEPA) of 1969 (42 U.S.C. 4321 *et seq.*), the regulations of the Council on Environmental Quality (40 U.S.C. part 1500), and the Department of Labor's NEPA procedures (29 CFR part 11). Since this proposed rule would impact safety, not health, the rule is categorically excluded from NEPA requirements because it would have no significant impact on the quality of the human environment (29 CFR 11.10(a)(1)). Accordingly, we have not conducted an environmental assessment nor provided an environmental impact statement.

M. Assessment of Federal Regulations and Policies on Families

We have determined that this proposed rule would have no affect on family well-being or stability, marital commitment, parental rights or authority, or income or poverty of families and children. Accordingly, section 654 of the Treasury and General Appropriations Act of 1999 requires no further agency action, analysis, or assessment.

List of Subjects in 30 CFR Part 48

Mine safety and health, Reporting and recordkeeping requirements, Training programs and mining.

For reasons set forth in the preamble, we propose to amend Chapter I of Title 30.

PART 48—[AMENDED]

1. The authority citation for part 48 continues to read as follows:

Authority: 30 U.S.C. 811, 825.

2. Section 48.2 is amended by revising paragraphs (a)(1) introductory text and (a)(1)(i) and by adding paragraph (b)(4) as follows:

§ 48.2 Definitions.

* * * * *

(a)(1) Miner means, for purposes of §§ 48.3 through 48.10 of this subpart A, any person working in an underground mine and who is engaged in the extraction and production process, or engaged in shaft or slope construction, or who is regularly exposed to mine hazards, or who is a maintenance or service worker employed by the operator or a maintenance or service worker contracted by the operator to work at the mine for frequent or extended periods. This definition shall include the operator if the operator works underground on a continuing, even if irregular, basis. Short-term, specialized contact workers, such as drillers and blasters, who are engaged in the extraction and production process or engaged in shaft or slope construction and who have received training under § 48.6 (Experienced miner training) of this subpart A may, in lieu of subsequent training under that section for each new employment, receive training under § 48.11 (Hazard training) of this subpart A. This definition does not include:

(i) Workers under subpart C of this part 48, engaged in the construction of major additions to an existing mine which requires the mine to cease operations;

* * * * *

(b) * * *

(4) A person employed as a shaft or slope construction worker on the effective date of the final rule.

* * * * *

3. Section 48.3 is amended by revising paragraph (a) introductory text and adding paragraph (o) as follows:

§ 48.3 Training plans; time of submission; where filed; information required; time for approval; method for disapproval; commencement of training; approval of instructors.

(a) Except as provided in paragraph (o) of this section, each operator of an underground mine shall have an MSHA approved plan containing programs for training new miners, training experienced miners, training miners for new tasks, annual refresher training, and hazard training for miners as follows:

* * * * *

(o) Each operator engaged in shaft or slope construction shall have an MSHA approved training plan, as outlined in this section, containing programs for training new miners, training experienced miners, training miners for new tasks, annual refresher training, and hazard training for miners as follows:

(1) In the case of an operator engaged in shaft or slope construction on [insert the publication date of final rule] the operator shall submit a plan for approval by [insert date 120 days from date final rule is published], unless extended by MSHA.

(2) In the case of new shaft or slope construction, the operator shall have an approved plan prior to commencing shaft or slope construction.

* * * * *

4. Paragraph (d) of §48.8 is revised to read as follows:

§ 48.8 Annual refresher training of miners; minimum courses of instruction; hours of instruction.

* * * * *

(d) All persons employed as shaft and slope construction workers on [insert effective date of final rule] must receive annual refresher training within 12 months of [insert effective month of the final rule].

Subpart B—[Amended]

5. Section 48.22 is amended by revising paragraphs (a)(1) introductory text, (a)(1)(i) and by adding paragraph (b)(4) as follows:

§ 48.22 Definitions.

* * * * *

(a)(1) Miner means, for purposes of §§ 48.23 through 48.30 of this subpart B, any person working in a surface mine or surface areas of an underground mine and who is engaged in the extraction and production process, or engaged in shaft or slope construction, or who is regularly exposed to mine hazards, or who is a maintenance or service worker employed by the operator or a maintenance or service worker contracted by the operator to work at the mine for frequent or extended periods. This definition shall include the operator if the operator works at the mine on a continuing, even if irregular, basis. Short-term, specialized contract workers, such as drillers and blasters, who are engaged in the extraction and production process or engaged in shaft or slope construction and who have received training under § 48.26 (Experienced miner training) of this subpart B, may in lieu of subsequent training under that section for each new employment, receive training under § 48.31 (Hazard training) of this subpart B. This definition does not include:

(i) Construction workers under subpart C of this part 48;

* * * * *

(b) * * *

(4) A person employed as a shaft or slope construction worker on [insert the effective date of the final rule].

* * * * *

6. Section 48.23 is amended by revising paragraph (a) introductory text and adding paragraph (o) as follows:

§ 48.23 Training plans; time of submission; where filed; information required; time for approval; method for disapproval; commencement of training; approval of instructors.

(a) Except as provided in paragraph (o) of this section, each operator of a surface mine shall have an MSHA approved plan containing programs for training new miners, training experienced miners, training miners for new tasks, annual refresher training, and hazard training for miners as follows:

* * * * *

(o) Each operator engaged in shaft or slope construction shall have an MSHA approved training plan, as outlined in this section, containing programs for training new miners, training experienced miners, training miners for new tasks, annual refresher training, and hazard training for miners as follows:

(1) In the case of an operator engaged in shaft or slope construction on [insert the publication date of final rule] the operator shall submit a plan for approval by [insert date 120 days from date final rule is published], unless extended by MSHA.

(2) In the case of new shaft or slope construction, the operator shall have an approved plan prior to commencing shaft or slope construction.

* * * * *

7. Paragraph (d) of § 48.28 is revised to read as follows:

§ 48.28 Annual refresher training of miners; minimum courses of instruction; hours of instruction.

* * * * *

(d) All persons employed as shaft and slope construction workers on [insert effective date of final rule] must receive annual refresher training within 12 months of [insert effective month of the final rule].

* * * * *

8. Subpart C is added to part 48 and reserved to read as follows:

Subpart C—[Reserved]

Dated: July 7, 2004.

Dave D. Lauriski,

Assistant Secretary of Labor for Mine Safety and Health.

[FR Doc. 04–15842 Filed 7–15–04; 8:45 am]

BILLING CODE 4510–43–P

Reader Aids

Federal Register

Vol. 69, No. 136

Friday, July 16, 2004

CUSTOMER SERVICE AND INFORMATION

Federal Register/Code of Federal Regulations	
General Information, indexes and other finding aids	**202–741–6000**
Laws	**741–6000**
Presidential Documents	
Executive orders and proclamations	**741–6000**
The United States Government Manual	**741–6000**
Other Services	
Electronic and on-line services (voice)	**741–6020**
Privacy Act Compilation	**741–6064**
Public Laws Update Service (numbers, dates, etc.)	**741–6043**
TTY for the deaf-and-hard-of-hearing	**741–6086**

ELECTRONIC RESEARCH

World Wide Web

Full text of the daily Federal Register, CFR and other publications is located at: **http://www.gpoaccess.gov/nara/index.html**

Federal Register information and research tools, including Public Inspection List, indexes, and links to GPO Access are located at: **http://www.archives.gov/federal_register/**

E-mail

FEDREGTOC-L (Federal Register Table of Contents LISTSERV) is an open e-mail service that provides subscribers with a digital form of the Federal Register Table of Contents. The digital form of the Federal Register Table of Contents includes HTML and PDF links to the full text of each document.

To join or leave, go to **http://listserv.access.gpo.gov** and select *Online mailing list archives, FEDREGTOC-L, Join or leave the list (orchange settings);* then follow the instructions.

PENS (Public Law Electronic Notification Service) is an e-mail service that notifies subscribers of recently enacted laws.

To subscribe, go to **http://listserv.gsa.gov/archives/publaws-l.html** and select *Join or leave the list* (or change settings); then follow the instructions.

FEDREGTOC-L and **PENS** are mailing lists only. We cannot respond to specific inquiries.

Reference questions. Send questions and comments about the Federal Register system to: **fedreg.info@nara.gov**

The Federal Register staff cannot interpret specific documents or regulations.

FEDERAL REGISTER PAGES AND DATE, JULY

39811–40304 1
40305–40532 2
40533–40762 6
40763–41178 7
41179–41374 8
41375–41748 9
41749–41900 12
41901–42086 13
42087–42328 14
42329–42548 15
42549–42848 16

CFR PARTS AFFECTED DURING JULY

At the end of each month, the Office of the Federal Register publishes separately a List of CFR Sections Affected (LSA), which lists parts and sections affected by documents published since the revision date of each title.

3 CFR

Proclamations:
7800 40299
7801 41179

Executive Orders:
11269 (See EO 13345) 41901
12163 (Amended by EO 13346) 41905
12757 (Revoked by EO 13345) 41901
12823 (Revoked by EO 13345) 41901
13028 (Revoked by EO 13345) 41901
13131 (Revoked by EO 13345) 41901
13227 (Amended by EO 13346) 41905
13261 (Amended by EO 13344) 41747
13344 41747
13345 41901
13346 41905

Administrative Orders:
Memorandums:
Memorandum of June 29, 2004 40531
Memorandum of July 5, 2004 42087
Presidential Determinations:
No. 2004–38 of June 24, 2004 40305
No. 2004–39 of June 25, 2004 40761

7 CFR

16 41375
301 ..... 40533, 41181
916 41120
917 41120
930 41383
981 ..... 40534, 41907
989 41385
1435 39811

Proposed Rules:
39 40819
3402 41763

8 CFR

103 39814
214 ..... 39814, 41388
299 39814

9 CFR

1 42089
2 42089
51 41909
78 40763
94 41915

Proposed Rules:
50 42288
51 ..... 41909, 42288
52 42288
53 42288
54 42288
55 42288
56 42288
57 42288
58 42288
59 42288
60 42288
61 42288
62 42288
63 42288
64 42288
65 42288
66 42288
67 42288
68 42288
69 42288
70 42288
71 42288
72 42288
73 42288
74 42288
75 42288
76 42288
77 ..... 40329, 42288
78 ..... 40556, 42288
79 42288
80 42288
81 42288
82 42288
83 42288
84 42288
85 42288
309 42288
310 42288
311 42288
318 42288
319 42288

10 CFR

2 41749

12 CFR

25 41181
201 41388
228 41181
345 41181
563e 41181
703 39827
704 39827

Proposed Rules:
Ch. VII 41202
41 42502
222 42502
334 42502
571 42502
701 39871
717 42502
723 39873
1412 41606

13 CFR

Proposed Rules:
121 39874

14 CFR

25 ....40307, 40520, 40537, 42329
36 41573
39 ....39833, 39834, 39835, 40309, 40539, 40541, 40764, 41189, 41389, 41391, 41394, 41396, 41398, 41401, 41403, 41405, 41407, 41410, 41411, 41413, 41414, 41417, 41418, 41419, 41421, 41920, 41923, 41925, 41926, 41928, 41930, 42549
71 ....39837, 40310, 40542, 41189, 42331
97 41934
383 41423
1260 41935
1274 41935
1275 42102

Proposed Rules:
39 ....39875, 39877, 40819, 40821, 40823, 41204, 41207, 41209, 41211, 41213, 41985, 41987, 41990, 41992, 41994, 41997, 42356, 42358, 42360, 42363, 42365, 42368, 41612
71 ....40330, 40331, 41215, 41216, 41218
121 42324
125 42324
135 42324

15 CFR

736 42332
738 41879
744 42332

16 CFR

305 42107
315 40482
456 40482

Proposed Rules:
682 41219
698 41616

17 CFR

1 41424
4 41424
31 41424
140 41424
145 41424
190 41424
200 ....41060, 41936
240 41060
249 41060
270 41696
275 41696
279 41696

Proposed Rules:
1 39880
38 39880
247 42302

18 CFR

388 41190

Proposed Rules:
5 40332
16 40332
156 40332
157 40332
385 40332

19 CFR

101 41749

20 CFR

667 41882
670 41882

Proposed Rules:
404 40338
416 40338
667 41769
1001 40724

21 CFR

110 40312
172 40765
189 42256
510 ....40765, 41427
520 41427
522 40765
524 ....40766, 41427
700 42256

Proposed Rules:
56 40556
189 42275
589 42288
700 42275

22 CFR

121 40313
123 40313

24 CFR

5 41712
35 40474
570 41712

Proposed Rules:
81 39886
570 41434

25 CFR

Proposed Rules:
Ch. 1 39887
36 41770
48 41770

26 CFR

1 ....41192, 42551, 42559
31 41938
157 41192
301 41938
602 ....41192, 41938

Proposed Rules:
1 42370
26 42000
49 40345

27 CFR

9 41750

28 CFR

302 41943
506 40315
540 40315

Proposed Rules:
550 39887

29 CFR

2 41882
37 ....41882, 41894
4022 42333
4044 42333

Proposed Rules:
37 41769
1910 41221
1915 41221
1917 41221
1918 41221
1926 ....41221, 42379

30 CFR

3 42112

Proposed Rules:
18 42812
48 42842
75 42812

32 CFR

260 42114

Proposed Rules:
635 41626

33 CFR

100 41196
107 41367
110 42335
117 ....41196, 41944
151 40767
161 39837
165 ....40319, 40542, 40768, 41196, 41367, 41944, 42115, 42335

Proposed Rules:
165 40345

34 CFR

75 41200

36 CFR

228 41428
242 40174
251 41946
261 41946
295 41946
701 39837
702 39837
704 39837
705 39837
800 40544

Proposed Rules:
7 40562
212 42381
251 42381
261 42381
294 41636
295 42381

37 CFR

Proposed Rules:
202 42004
211 42004
212 42004
270 42007

38 CFR

1 39844
17 39845

39 CFR

3 42340
265 39851

40 CFR

9 41576
51 ....40274, 40278, 42560
52 ....39854, 39856, 39858, 39860, 40274, 40278, 40321, 40324, 41336, 41431, 42340, 42560
60 ....40770, 41346, 42117
62 42117
63 ....39862, 41757
81 ....39860, 41336
93 40004
122 41576
123 41576
124 41576
125 41576
147 42341
152 39862
154 39862
158 39862
159 39862
168 39862
178 39862
180 ....40774, 40781, 42560
194 42571
239 42583
257 42583
710 40787

Proposed Rules:
51 41225
52 ....39892, 40824, 41344, 41441
60 ....40824, 40829, 42123
62 ....42123, 41641
63 41779
81 41344
131 41720
180 ....40831, 41442
239 41644
257 41644
261 42395
271 40568

42 CFR

414 40288

43 CFR

3830 40294
3834 40294

44 CFR

64 ....40324, 42584

Proposed Rules:
67 ....40836, 40837

45 CFR

74 42586
87 42586
92 42586
96 42586

Proposed Rules:
30 42010
33 42022
46 40584

47 CFR

0 41130
1 ....39864, 40326, 41028, 41130
27 39864
64 40325
73 ....39868, 39869, 40791, 41432, 42345
90 39864
95 39864

Proposed Rules:
54 40839
64 42125
73 ....39893, 41444
101 40843

48 CFR

Proposed Rules:
16 40514
39 40514
45 42544
52 42544
533 40730
552 40730

49 CFR

37 40794
172 41967
193 41761
544 41974
571 42595
572 42595

Proposed Rules:
571 42126

50 CFR

17 ....40084, 40796
100 40174
216 41976
223 40734
622 41433
635 40734
648 ....40850, 41980
660 ....40805, 40817, 42345
679 ....41984, 42122, 42345

Proposed Rules:
17 41445
32 42127
224 41446
300 41447
402 40346
648 41026
660 40851
679 ....41447, 42128

REMINDERS

The items in this list were editorially compiled as an aid to Federal Register users. Inclusion or exclusion from this list has no legal significance.

RULES GOING INTO EFFECT JULY 16, 2004

COMMERCE DEPARTMENT

National Institute of Standards and Technology

National Construction Safety Team Act; implementation; published 6-16-04

ENVIRONMENTAL PROTECTION AGENCY

Pesticides; tolerances in food, animal feeds, and raw agricultural commodities:

Spiroxamine; published 7-16-04

FEDERAL RESERVE SYSTEM

Fair and Accurate Credit Transactions Act; implementation:

Fair credit reporting provisions (Regulation V); published 6-15-04

NUCLEAR REGULATORY COMMISSION

Production and utilization facilities; domestic licensing:

Light water reactor electric generating plants; voluntary fire protection requirements; published 6-16-04

PERSONNEL MANAGEMENT OFFICE

Practice and procedure:

Agency regulations; posting notices; published 6-16-04

TREASURY DEPARTMENT

Internal Revenue Service

Income taxes:

Long-term contracts; partnership transactions; published 7-16-04

VETERANS AFFAIRS DEPARTMENT

Medical benefits:

Sensori-neural aids; extension to Purple Heart recipients; published 6-16-04

RULES GOING INTO EFFECT JULY 17, 2004

HOMELAND SECURITY DEPARTMENT

Coast Guard

Ports and waterways safety:

Elliott Bay and Lake Washington, WA; security zones; published 7-14-04

Lake Huron, MI; safety zone; published 6-23-04

COMMENTS DUE NEXT WEEK

AGRICULTURE DEPARTMENT

Agricultural Marketing Service

Cotton classing, testing and standards:

Classification services to growers; 2004 user fees; Open for comments until further notice; published 5-28-04 [FR 04-12138]

AGRICULTURE DEPARTMENT

Animal and Plant Health Inspection Service

Interstate transportation of animals and animal products (quarantine):

Brucellosis in cattle, bison, and swine—

Fluorescense polarization assay; official test addition; comments due by 7-21-04; published 7-6-04 [FR 04-15213]

Plant-related quarantine, domestic and foreign:

Mexican Hass Avocado Import Program; comments due by 7-23-04; published 5-24-04 [FR 04-11709]

Correction; comments due by 7-23-04; published 6-16-04 [FR 04-13557]

AGRICULTURE DEPARTMENT

Commodity Credit Corporation

Loan and purchase programs:

Emerging Markets Program; comments due by 7-22-04; published 6-22-04 [FR 04-13862]

Grassland Reserve Program; comments due by 7-20-04; published 5-21-04 [FR 04-11473]

Tobacco; comments due by 7-22-04; published 6-22-04 [FR 04-14063]

COMMERCE DEPARTMENT

National Oceanic and Atmospheric Administration

Endangered Species Act:

Joint counterpart consultation regulation; comments due by 7-23-04; published 7-2-04 [FR 04-15051]

Fishery conservation and management:

West Coast States and Western Pacific fisheries—

Salmon; comments due by 7-22-04; published 7-7-04 [FR 04-15255]

COURT SERVICES AND OFFENDER SUPERVISION AGENCY FOR THE DISTRICT OF COLUMBIA

Semi-annual agenda; Open for comments until further notice; published 12-22-03 [FR 03-25121]

DEFENSE DEPARTMENT

Federal Acquisition Regulation (FAR):

Buy America Act—

Nonavailable articles; comments due by 7-19-04; published 5-18-04 [FR 04-11209]

Buy American Act—

Nonavailable articles; comments due by 7-23-04; published 5-24-04 [FR 04-11596]

Gains and losses on disposition or impairment of depreciable property or other capital assets; comments due by 7-20-04; published 5-21-04 [FR 04-11458]

ENERGY DEPARTMENT

Federal Energy Regulatory Commission

Electric rate and corporate regulation filings:

Virginia Electric & Power Co. et al.; Open for comments until further notice; published 10-1-03 [FR 03-24818]

ENVIRONMENTAL PROTECTION AGENCY

Air programs:

Outer Continental Shelf regulations—

California; consistency update; comments due by 7-23-04; published 6-23-04 [FR 04-14220]

Stratospheric ozone protection—

HCFC production, import, and export; allowance system; comments due by 7-19-04; published 6-17-04 [FR 04-13680]

HCFC production, import, and export; allowance system; comments due by 7-19-04; published 6-17-04 [FR 04-13681]

Air quality implementation plans; approval and promulgation; various States:

California; comments due by 7-21-04; published 6-21-04 [FR 04-13932]

Connecticut; comments due by 7-23-04; published 6-23-04 [FR 04-14219]

Environmental statements; availability, etc.:

Coastal nonpoint pollution control program—

Minnesota and Texas; Open for comments until further notice; published 10-16-03 [FR 03-26087]

Pesticides; tolerances in food, animal feeds, and raw agricultural commodities:

Bifenthrin, etc.; comments due by 7-23-04; published 5-24-04 [FR 04-11673]

Indoxacarb; comments due by 7-19-04; published 5-19-04 [FR 04-11346]

Solid wastes:

Hazardous waste generator program evaluation; comments due by 7-21-04; published 4-22-04 [FR 04-09141]

Water pollution; effluent guidelines for point source categories:

Meat and poultry products processing facilities; Open for comments until further notice; published 12-30-99 [FR 04-12017]

FEDERAL COMMUNICATIONS COMMISSION

Digital television stations; table of assignments:

Hawaii; comments due by 7-19-04; published 6-18-04 [FR 04-13812]

Radio frequency devices:

Radio frequency identification systems; operation in 433 MHz band; comments due by 7-23-04; published 5-24-04 [FR 04-11537]

Radio stations; table of assignments:

Alabama and Georgia; comments due by 7-19-04; published 6-18-04 [FR 04-13808]

Florida and Nevada; comments due by 7-19-04; published 6-18-04 [FR 04-13811]

Various States; comments due by 7-19-04; published 6-18-04 [FR 04-13809]

Wisconsin; comments due by 7-19-04; published 6-18-04 [FR 04-13810]

FEDERAL DEPOSIT INSURANCE CORPORATION

Fair and Accurate Credit Transactions Act; implementation:

Consumer information; proper disposal; comments due by 7-23-

04; published 6-8-04 [FR 04-12317]

FEDERAL RESERVE SYSTEM

Fair and Accurate Credit Transactions Act; implementation:
Consumer information; proper disposal; comments due by 7-23-04; published 6-8-04 [FR 04-12317]

FEDERAL TRADE COMMISSION

Fair and Accurate Credit Transactions Act; implementation:
Affiliate marketing; comments due by 7-20-04; published 6-15-04 [FR 04-13481]

GENERAL SERVICES ADMINISTRATION

Federal Acquisition Regulation (FAR):
Buy America Act—
Nonavailable articles; comments due by 7-19-04; published 5-18-04 [FR 04-11209]
Buy American Act—
Nonavailable articles; comments due by 7-23-04; published 5-24-04 [FR 04-11596]
Gains and losses on disposition or impairment of depreciable property or other capital assets; comments due by 7-20-04; published 5-21-04 [FR 04-11458]

HEALTH AND HUMAN SERVICES DEPARTMENT

Food and Drug Administration

Human drugs:
Labeling of drug products (OTC)—
Toll-free number for reporting adverse side effects; comments due by 7-21-04; published 4-22-04 [FR 04-09069]
Reports and guidance documents; availability, etc.:
Evaluating safety of antimicrobial new animal drugs with regard to their microbiological effects on bacteria of human health concern; Open for comments until further notice; published 10-27-03 [FR 03-27113]

HEALTH AND HUMAN SERVICES DEPARTMENT

Health care programs; fraud and abuse:
Healthcare Integrity and Protection Data Bank; data collection reporting requirements; comments due by 7-19-04; published 6-17-04 [FR 04-13675]

HEALTH AND HUMAN SERVICES DEPARTMENT

Inspector General Office, Health and Human Services Department

Health care programs; fraud and abuse:
Healthcare Integrity and Protection Data Bank; data collection reporting requirements; comments due by 7-19-04; published 6-17-04 [FR 04-13675]
Medicare and State health care programs; fraud and abuse:
Medicare Prescription Drug Discount Card Program; civil money penalties; comments due by 7-19-04; published 5-19-04 [FR 04-11191]

HOMELAND SECURITY DEPARTMENT

Coast Guard

Anchorage regulations:
Maryland; Open for comments until further notice; published 1-14-04 [FR 04-00749]
Ports and waterways safety:
Oahu, Maui, Hawaii, and Kauai, HI; security zones; comments due by 7-19-04; published 5-20-04 [FR 04-11393]

HOMELAND SECURITY DEPARTMENT

Transportation Security Administration

Sensitive security information protection; comments due by 7-19-04; published 5-18-04 [FR 04-11142]

INTERIOR DEPARTMENT

Fish and Wildlife Service

Endangered and threatened species:
Critical habitat designations—
Mammal and bird species in Guam and from Northern Mariana Islands; comments due by 7-19-04; published 6-2-04 [FR 04-12432]
Endangered Species Act:
Joint counterpart consultation regulations; comments due by 7-23-04; published 7-2-04 [FR 04-15051]

NATIONAL AERONAUTICS AND SPACE ADMINISTRATION

Acquisition regulations:
Administrative procedures and guidance; comments due by 7-20-04; published 5-21-04 [FR 04-11457]
Federal Acquisition Regulation (FAR):
Buy America Act—
Nonavailable articles; comments due by 7-19-04; published 5-18-04 [FR 04-11209]
Buy American Act—
Nonavailable articles; comments due by 7-23-04; published 5-24-04 [FR 04-11596]
Gains and losses on disposition or impairment of depreciable property or other capital assets; comments due by 7-20-04; published 5-21-04 [FR 04-11458]

NUCLEAR REGULATORY COMMISSION

Environmental statements; availability, etc.:
Fort Wayne State Developmental Center; Open for comments until further notice; published 5-10-04 [FR 04-10516]

OCCUPATIONAL SAFETY AND HEALTH REVIEW COMMISSION

Practice and procedure:
Procedure rules; revisions; comments due by 7-19-04; published 6-17-04 [FR 04-13607]

SECURITIES AND EXCHANGE COMMISSION

Securities:
Removal from listing and registration; comments due by 7-22-04; published 6-22-04 [FR 04-13965]

SMALL BUSINESS ADMINISTRATION

Disaster loan areas:
Maine; Open for comments until further notice; published 2-17-04 [FR 04-03374]

OFFICE OF UNITED STATES TRADE REPRESENTATIVE

Trade Representative, Office of United States

Generalized System of Preferences:
2003 Annual Product Review, 2002 Annual Country Practices Review, and previously deferred product decisions; petitions disposition; Open for comments until further notice; published 7-6-04 [FR 04-15361]

TRANSPORTATION DEPARTMENT

Sensitive security information protection; comments due by 7-19-04; published 5-18-04 [FR 04-11142]

TRANSPORTATION DEPARTMENT

Federal Aviation Administration

Airworthiness directives:
Airbus; comments due by 7-19-04; published 6-18-04 [FR 04-13868]
Aviointeriors S.p.A.; comments due by 7-19-04; published 5-20-04 [FR 04-11409]
BAE Systems (Operations), Ltd.; comments due by 7-21-04; published 6-21-04 [FR 04-13916]
Becker Flugfunkwerk GmbH; comments due by 7-19-04; published 5-20-04 [FR 04-11410]
Bell; comments due by 7-19-04; published 5-20-04 [FR 04-11039]
Boeing; comments due by 7-19-04; published 6-3-04 [FR 04-12576]
Empresa Brasileira de Aeronautica S.A. (EMBRAER); comments due by 7-19-04; published 6-18-04 [FR 04-13869]
General Electric; comments due by 7-19-04; published 5-18-04 [FR 04-11199]
Hartzell Propeller, Inc., et al.; comments due by 7-19-04; published 5-20-04 [FR 04-11408]
Rolls-Royce plc; comments due by 7-19-04; published 5-18-04 [FR 04-11200]
Class D airspace; comments due by 7-19-04; published 5-20-04 [FR 04-11450]
Class E airspace; comments due by 7-19-04; published 5-20-04 [FR 04-11449]

TREASURY DEPARTMENT

Comptroller of the Currency

Fair and Accurate Credit Transactions Act; implementation:
Consumer information; proper disposal; comments due by 7-23-04; published 6-8-04 [FR 04-12317]

TREASURY DEPARTMENT

Thrift Supervision Office

Fair and Accurate Credit Transactions Act; implementation:
Consumer information; proper disposal; comments due by 7-23-04; published 6-8-04 [FR 04-12317]

LIST OF PUBLIC LAWS

This is a continuing list of public bills from the current

session of Congress which have become Federal laws. It may be used in conjunction with ''P L U S'' (Public Laws Update Service) on 202–741–6043. This list is also available online at *http://www.archives.gov/federal_register/public_laws/public_laws.html*.

The text of laws is not published in the **Federal Register** but may be ordered in ''slip law'' (individual pamphlet) form from the Superintendent of Documents, U.S. Government Printing Office, Washington, DC 20402 (phone, 202–512–1808). The text will also be made available on the Internet from GPO Access at *http://www.gpoaccess.gov/plaws/index.html*. Some laws may not yet be available.

H.R. 4103/P.L. 108–274

AGOA Acceleration Act of 2004 (July 13, 2004; 118 Stat. 820)

H.R. 1731/P.L. 108–275

Identity Theft Penalty Enhancement Act (July 15, 2004; 118 Stat. 831)

Last List July 9, 2004

Public Laws Electronic Notification Service (PENS)

PENS is a free electronic mail notification service of newly enacted public laws. To subscribe, go to *http://listserv.gsa.gov/archives/publaws-l.html*

Note: This service is strictly for E-mail notification of new laws. The text of laws is not available through this service. **PENS** cannot respond to specific inquiries sent to this address.