AUTHENTICATED
U.S. GOVERNMENT
INFORMATION
GPO

Federal Register

1–21–04 Wednesday
Vol. 69 No. 13 Jan. 21, 2004

Pages 2825–2996

The **FEDERAL REGISTER** (ISSN 0097–6326) is published daily, Monday through Friday, except official holidays, by the Office of the Federal Register, National Archives and Records Administration, Washington, DC 20408, under the Federal Register Act (44 U.S.C. Ch. 15) and the regulations of the Administrative Committee of the Federal Register (1 CFR Ch. I). The Superintendent of Documents, U.S. Government Printing Office, Washington, DC 20402 is the exclusive distributor of the official edition. Periodicals postage is paid at Washington, DC.

The **FEDERAL REGISTER** provides a uniform system for making available to the public regulations and legal notices issued by Federal agencies. These include Presidential proclamations and Executive Orders, Federal agency documents having general applicability and legal effect, documents required to be published by act of Congress, and other Federal agency documents of public interest.

Documents are on file for public inspection in the Office of the Federal Register the day before they are published, unless the issuing agency requests earlier filing. For a list of documents currently on file for public inspection, *www.archives.gov.*

The seal of the National Archives and Records Administration authenticates the Federal Register as the official serial publication established under the Federal Register Act. Under 44 U.S.C. 1507, the contents of the **Federal Register** shall be judicially noticed.

The **Federal Register** is published in paper and on 24x microfiche. It is also available online at no charge as one of the databases on GPO Access, a service of the U.S. Government Printing Office.

The online edition of the **Federal Register** *www.access.gpo.gov/nara,* available through GPO Access, is issued under the authority of the Administrative Committee of the Federal Register as the official legal equivalent of the paper and microfiche editions (44 U.S.C. 4101 and 1 CFR 5.10). It is updated by 6 a.m. each day the **Federal Register** is published and includes both text and graphics from Volume 59, Number 1 (January 2, 1994) forward.

For more information about GPO Access, contact the GPO Access User Support Team, call toll free 1-888-293-6498; DC area 202-512-1530; fax at 202-512-1262; or via email at *gpoaccess@gpo.gov.* The Support Team is available between 7:00 a.m. and 9:00 p.m. Eastern Time, Monday–Friday, except official holidays.

The annual subscription price for the **Federal Register** paper edition is $699, or $764 for a combined **Federal Register, Federal Register** Index and List of CFR Sections Affected (LSA) subscription; the microfiche edition of the **Federal Register** including the **Federal Register** Index and LSA is $264. Six month subscriptions are available for one-half the annual rate. The charge for individual copies in paper form is $10.00 for each issue, or $10.00 for each group of pages as actually bound; or $2.00 for each issue in microfiche form. All prices include regular domestic postage and handling. International customers please add 40% for foreign handling. Remit check or money order, made payable to the Superintendent of Documents, or charge to your GPO Deposit Account, VISA, MasterCard, American Express, or Discover. Mail to: New Orders, Superintendent of Documents, P.O. Box 371954, Pittsburgh, PA 15250-7954; or call toll free 1-866-512-1800, DC area 202-512-1800; or go to the U.S. Government Online Bookstore site, *bookstore@gpo.gov.*

There are no restrictions on the republication of material appearing in the **Federal Register.**

How To Cite This Publication: Use the volume number and the page number. Example: 69 FR 12345.

Postmaster: Send address changes to the Superintendent of Documents, Federal Register, U.S. Government Printing Office, Washington DC 20402, along with the entire mailing label from the last issue received.

SUBSCRIPTIONS AND COPIES

PUBLIC	
Subscriptions:	
Paper or fiche	**202–512–1800**
Assistance with public subscriptions	**202–512–1806**
General online information	**202–512–1530; 1–888–293–6498**
Single copies/back copies:	
Paper or fiche	**202–512–1800**
Assistance with public single copies	**1–866–512–1800 (Toll-Free)**
FEDERAL AGENCIES	
Subscriptions:	
Paper or fiche	**202–741–6005**
Assistance with Federal agency subscriptions	**202–741–6005**

What's NEW!

Federal Register Table of Contents via e-mail

Subscribe to FEDREGTOC, to receive the **Federal Register** Table of Contents in your e-mail every day.

If you get the HTML version, you can click directly to any document in the issue.

To subscribe, go to **http://listserv.access.gpo.gov** and select:

Online mailing list archives
FEDREGTOC-L
Join or leave the list

Then follow the instructions.

What's NEW!

Regulations.gov, the award-winning Federal eRulemaking Portal

Regulations.gov is the one-stop U.S. Government web site that makes it easy to participate in the regulatory process.

Try this fast and reliable resource to find all rules published in the *Federal Register* that are currently open for public comment. Submit comments to agencies by filling out a simple web form, or use available email addresses and web sites.

The Regulations.gov e-democracy initiative is brought to you by NARA, GPO, EPA and their eRulemaking partners.

Visit the web site at: **http://www.regulations.gov**

Printed on recycled paper.

Contents

Federal Register

Vol. 69, No. 13

Wednesday, January 21, 2004

Agricultural Marketing Service
NOTICES
Canned pears; grade standards, 2885
Meetings:
Fruit and Vegetable Industry Advisory Committee, 2885–2886

Agricultural Research Service
NOTICES
Patent licenses; non-exclusive, exclusive, or partially exclusive:
Tetracore, Inc., 2886

Agriculture Department
See Agricultural Marketing Service
See Agricultural Research Service
See Natural Resources Conservation Service

Antitrust Division
NOTICES
National cooperative research notifications:
AAF Association, Inc., 2945
Deep Trek High Temperature Electronics, 2945
Interchangeable Virtual Instruments Foundation, Inc., 2945–2946
PXI Systems Alliance, Inc., 2946
Southwest Research Institute, 2946

Census Bureau
NOTICES
Committees; establishment, renewal, termination, etc.:
Census Advisory Committees, 2886–2890

Centers for Disease Control and Prevention
NOTICES
Grants and cooperative agreements; availability, etc.:
National Cancer Prevention and Control Program, 2933–2936
Meetings:
Disease, Disability, and Injury Prevention and Control Special Emphasis Panels, 2936

Children and Families Administration
NOTICES
Agency information collection activities; proposals, submissions, and approvals, 2936–2937

Coast Guard
RULES
Ports and waterways safety:
San Francisco Bay, CA—
Regulated navigation areas, 2841–2843

Commerce Department
See Census Bureau
See National Institute of Standards and Technology
See National Oceanic and Atmospheric Administration
See National Telecommunications and Information Administration

Comptroller of the Currency
PROPOSED RULES
Agency information collection activities; proposals, submissions, and approvals, 2852–2855

Corporation for National and Community Service
NOTICES
Agency information collection activities; proposals, submissions, and approvals, 2903–2904

Defense Department
See Navy Department
PROPOSED RULES
Federal Acquisition Regulation (FAR):
Definitions clause, 2987–2988

Education Department
NOTICES
Agency information collection activities; proposals, submissions, and approvals, 2904–2905
Grants and cooperative agreements; availability, etc.:
U.S.-European Community Cooperation Program in Higher Education and Vocational Education and Training; correction, 2905

Employment Standards Administration
NOTICES
Agency information collection activities; proposals, submissions, and approvals, 2946–2947

Energy Department
See Energy Information Administration
See Federal Energy Regulatory Commission
NOTICES
Grants and cooperative agreements; availability, etc.:
Science Discovery Through Advanced Computing—Advanced Simulation of Fusion Plasmas, 2906–2908
Radiological condition certifications:
Chapman Valve Site, Indian Orchard, MA, 2908–2909

Energy Information Administration
NOTICES
Reports and guidance documents; availability, etc.:
Statistical information based on petroleum supply reporting system survey data; policy statement, 2909–2910

Environmental Protection Agency
RULES
Air quality implementation plans; approval and promulgation; various States:
Iowa; correction, 2967

Executive Office of the President
See Presidential Documents

Export-Import Bank
NOTICES
Agency information collection activities; proposals, submissions, and approvals, 2918–2928
Meetings:
Sub-Saharan Africa Advisory Committee, 2929

Federal Accounting Standards Advisory Board
NOTICES
Meetings:
Heritage assets and stewardship land; reclassification from required supplementary stewardship information; hearing, 2929

Federal Aviation Administration
RULES
IFR altitudes, 2830–2831
PROPOSED RULES
Airworthiness directives:
Bell, 2855–2861
Organization Designation Authorization Program; establishment, 2969–2986

Federal Communications Commission
RULES
Radio frequency devices and television broadcasting:
Commission's rules; editorial modifications, 2848–2849
PROPOSED RULES
Common carrier services:
Access charge reform; reconsideration rules; record update, 2862–2863
Radio frequency devices:
Interference temperature operation, 2863–2870
NOTICES
Agency information collection activities; proposals, submissions, and approvals, 2929–2931

Federal Deposit Insurance Corporation
RULES
Deposit insurance coverage:
Living trust accounts, 2825–2830
PROPOSED RULES
Agency information collection activities; proposals, submissions, and approvals, 2852–2855

Federal Energy Regulatory Commission
NOTICES
Hydroelectric applications, 2916–2918
Applications, hearings, determinations, etc.:
Algonquin Gas Transmission Co., 2911
ANR Pipeline Co., 2911
CenterPoint Energy Gas Transmission Co., 2911
Cranberry Pipeline Corp., 2912
East Tennessee Natural Gas Co., 2912–2913
Florida Gas Transmission Co., 2913
Gas Transmission Northwest Corp., 2913
Gulfstream Natural Gas System, L.L.C., 2913–2914
Kern River Gas Transmission Co., 2914
Maritimes & Northeast Pipeline, L.L.C, 2914–2915
Mojave Pipeline Co., 2915
Tennessee Gas Pipeline Co., 2915
Texas Eastern Transmission, LP, 2915–2916

Federal Highway Administration
NOTICES
Environmental statements; notice of intent:
Manatee County, FL, 2961–2962

Federal Reserve System
PROPOSED RULES
Agency information collection activities; proposals, submissions, and approvals, 2852–2855
NOTICES
Banks and bank holding companies:
Change in bank control, 2931
Formations, acquisitions, and mergers, 2931–2932
Committees; establishment, renewal, termination, etc.:
Consumer Advisory Council, 2932–2933
Meetings; Sunshine Act, 2933

Fish and Wildlife Service
NOTICES
Environmental statements; notice of intent:
Critical habitat designations—
Southwestern willow flycatcher; meetings, 2940–2943

General Services Administration
PROPOSED RULES
Federal Acquisition Regulation (FAR):
Definitions clause, 2987–2988

Health and Human Services Department
See Centers for Disease Control and Prevention
See Children and Families Administration
See National Institutes of Health
See Substance Abuse and Mental Health Services Administration
RULES
Equal Access to Justice Act; implementation, 2843–2848

Homeland Security Department
See Coast Guard

Interior Department
See Fish and Wildlife Service
See Land Management Bureau
See Reclamation Bureau

Internal Revenue Service
PROPOSED RULES
Income taxes:
Mortgage revenue bonds; public hearing; cancelled, 2862
NOTICES
Meetings:
Taxpayer Advocacy Panels, 2962

Justice Department
See Antitrust Division
RULES
Grants:
Religious organizations; participation in department programs; equal treatment of all program participants, 2832–2841

Labor Department
See Employment Standards Administration

Land Management Bureau
NOTICES
Meetings:
Resource Advisory Councils—
Arizona, 2943

Merit Systems Protection Board
NOTICES
Privacy Act:
Systems of records, 2947–2948

National Aeronautics and Space Administration
RULES
Grant and Cooperative Agreement Handbook:
Central contractor registration, 2831–2832
PROPOSED RULES
Federal Acquisition Regulation (FAR):
Definitions clause, 2987–2988

NOTICES
Agency information collection activities; proposals, submissions, and approvals, 2948
Meetings:
U.S. Centennial of Flight Commission, 2949

National Credit Union Administration
NOTICES
Meetings; Sunshine Act, 2949

National Institute of Standards and Technology
NOTICES
Reports and guidance documents; availability, etc.:
Internet Protocol version 6; deployment, 2890–2899

National Institutes of Health
NOTICES
Meetings:
National Cancer Institute, 2937
National Institute of Neurological Disorders and Stroke, 2937–2938
National Institute of Nursing Research, 2938

National Oceanic and Atmospheric Administration
RULES
Fishery conservation and management:
Alaska; fisheries of Exclusive Economic Zone—
Atka mackerel, 2849–2851
Pollock, 2850
PROPOSED RULES
Fishery conservation and management:
Alaska; fisheries of Exclusive Economic Zone—
Demersal shelf rockfish, 2875–2884
Northeastern United States fisheries—
Northeast multispecies; reporting and recordkeeping requirements, 2870–2875
NOTICES
Marine mammals:
Incidental taking; authorization letters, etc.—
U.S. Army Corps of Engineers; Dodge-Lummus Island Turning Basin, Miami, FL; deepening; bottlenose dolphins, 2899–2902
Permits:
Marine mammals, 2902–2903
Reports and guidance documents; availability, etc.:
Coral Reef Conservation Grant Program; progress report, 2903

National Science Foundation
NOTICES
Agency information collection activities; proposals, submissions, and approvals, 2949–2950

National Telecommunications and Information Administration
NOTICES
Reports and guidance documents; availability, etc.:
Internet Protocol version 6; deployment, 2890–2899

National Transportation Safety Board
NOTICES
Meetings; Sunshine Act, 2950

National Women's Business Council
NOTICES
Meetings; Sunshine Act, 2950

Natural Resources Conservation Service
PROPOSED RULES
Loan and purchase programs:
Conservation Security Program
Meetings; correction, 2852

Navy Department
NOTICES
Inventions, Government-owned; availability for licensing, 2904

Nuclear Regulatory Commission
NOTICES
Meetings:
Reactor Safeguards Advisory Committee, 2951–2952
Meetings; Sunshine Act, 2952

Overseas Private Investment Corporation
NOTICES
Meetings; Sunshine Act, 2952–2953

Personnel Management Office
NOTICES
Excepted service; positions placed or revoked, 2953–2954

Presidential Documents
PROCLAMATIONS
Special observances:
Religious Freedom Day (Proc. 7753), 2993–2996
ADMINISTRATIVE ORDERS
Middle East; state of emergency with respect to terrorists who threaten to disrupt the peace process (Notice of January 16, 2004), 2989–2991

Reclamation Bureau
NOTICES
Environmental statements; notice of intent:
Colorado River Storage Project, CO; Aspinall Unit operational changes; effects on endangered fish, 2943–2945

Securities and Exchange Commission
NOTICES
Self-regulatory organizations; proposed rule changes:
National Association of Securities Dealers, Inc., 2954–2957
New York Stock Exchange, Inc., 2958–2959
Pacific Exchange, Inc.; correction, 2967
Philadelphia Stock Exchange, Inc., 2959–2961

Social Security Administration
NOTICES
Meetings:
Ticket to Work and Work Incentives Advisory Panel, 2961

Substance Abuse and Mental Health Services Administration
NOTICES
Agency information collection activities; proposals, submissions, and approvals, 2938–2940
Grants and cooperative agreements; availability, etc.:
Knowledge Dissemination Conference Program; application receipt dates suspended, 2940

Thrift Supervision Office
PROPOSED RULES
Agency information collection activities; proposals, submissions, and approvals, 2852–2855

Transportation Department
See Federal Aviation Administration
See Federal Highway Administration

Treasury Department
See Comptroller of the Currency
See Internal Revenue Service
See Thrift Supervision Office

Veterans Affairs Department
NOTICES
Privacy Act:
Systems of records, 2962–2966

Separate Parts In This Issue

Part II
Transportation Department, Federal Aviation Administration, 2969–2986

Part III
Defense Department; General Services Administration; National Aeronautics and Space Administration, 2987–2988

Part IV
Executive Office of the President, Presidential Documents, 2989–2991

Part V
Executive Office of the President, Presidential Documents, 2993–2996

Reader Aids

Consult the Reader Aids section at the end of this issue for phone numbers, online resources, finding aids, reminders, and notice of recently enacted public laws.

To subscribe to the Federal Register Table of Contents LISTSERV electronic mailing list, go to http://listserv.access.gpo.gov and select Online mailing list archives, FEDREGTOC-L, Join or leave the list (or change settings); then follow the instructions.

CFR PARTS AFFECTED IN THIS ISSUE

A cumulative list of the parts affected this month can be found in the Reader Aids section at the end of this issue.

3 CFR

Proclamations:
7753 2995

Executive Orders:
12947 (See Notice of January 16, 2004 2991
13099 (See Notice of January 16, 2004 2991

Administrative Orders:
Notices:
Notice of January 16, 2004 2991

7 CFR

Proposed Rules:
1469 2852

12 CFR
330 2825

Proposed Rules:
Ch. I 2852
Ch. II 2852
Ch. III 2852
Ch. V 2852

14 CFR
95 2830
1260 2831

Proposed Rules:
21 2970
39 2855
121 2970
135 2970
145 2970
183 2970

26 CFR

Proposed Rules:
1 2862

28 CFR
31 2832
33 2832
38 2832
90 2832
91 2832
93 2832

33 CFR
165 2841

40 CFR
52 2967

45 CFR
13 2843

47 CFR
15 2848
76 2848

Proposed Rules:
0 2862
1 2862
15 2863
61 2862
69 2862

48 CFR

Proposed Rules:
2 2988
52 2988

50 CFR
679 (3 documents) 2849, 2850

Proposed Rules:
648 2870
679 2875

Rules and Regulations

Federal Register
Vol. 69, No. 13
Wednesday, January 21, 2004

This section of the FEDERAL REGISTER contains regulatory documents having general applicability and legal effect, most of which are keyed to and codified in the Code of Federal Regulations, which is published under 50 titles pursuant to 44 U.S.C. 1510.

The Code of Federal Regulations is sold by the Superintendent of Documents. Prices of new books are listed in the first FEDERAL REGISTER issue of each week.

FEDERAL DEPOSIT INSURANCE CORPORATION

12 CFR Part 330

RIN 3064–AC54

Deposit Insurance Regulations; Living Trust Accounts

AGENCY: Federal Deposit Insurance Corporation (FDIC).

ACTION: Final rule.

SUMMARY: The FDIC is amending its regulations to clarify and simplify the deposit insurance coverage rules for living trust accounts. The rules are amended to provide coverage up to $100,000 per qualifying beneficiary who, as of the date of an insured depository institution failure, would become the owner of the living trust assets upon the account owner's death.

EFFECTIVE DATE: April 1, 2004.

FOR FURTHER INFORMATION CONTACT: Joseph A. DiNuzzo, Counsel, Legal Division (202) 898–7349; Kathleen G. Nagle, Supervisory Consumer Affairs Specialist, Division of Supervision and Consumer Protection (202) 898–6541; or Martin W. Becker, Senior Receivership Management Specialist, Division of Resolutions and Receiverships (202) 898–6644, Federal Deposit Insurance Corporation, Washington, DC 20429.

SUPPLEMENTARY INFORMATION:

I. Background

In June 2003 the FDIC published a proposed rule to simplify the insurance coverage rules for living trust accounts (''proposed rule''). 68 FR 38645, June 30, 2003. The FDIC undertook this rulemaking because of the confusion among bankers and the public about the insurance coverage of these accounts.

A living trust is a formal revocable trust over which the owner (also known as the grantor) retains ownership during his or her lifetime. Upon the owner's death, the trust generally becomes irrevocable. A living trust is an increasingly popular instrument designed to achieve specific estate-planning goals. A living trust account is subject to the FDIC's insurance rules on revocable trust accounts. Section 330.10 of the FDIC's regulations (12 CFR 330.10) provides that revocable trust accounts are insured up to $100,000 per ''qualifying'' beneficiary designated by the account owner. If there are multiple owners of a living trust account, coverage is available separately for each owner. Qualifying beneficiaries are defined as the owner's spouse, children, grandchildren, parents and siblings. 12 CFR 330.10 (a).

The most common type of revocable trust account is the ''payable-on-death'' (''POD'') account, comprised simply of a signature card on which the owner designates the beneficiaries to whom the funds in the account will pass upon the owner's death. The per-beneficiary coverage available on revocable trust accounts is separate from the insurance coverage afforded to any single-ownership accounts held by the owner or beneficiary at the same insured institution. That means, for example, if an individual has at the same insured bank or thrift a single-ownership account with a balance of $100,000 and a POD account (naming at least one qualifying beneficiary) with a balance of $100,000, both accounts would be insured separately for a combined amount of $200,000. If the POD account names more than one qualifying beneficiary, then that account would be insured for up to $100,000 per qualifying beneficiary. 12 CFR 330.10(a).

Separate, per-beneficiary insurance coverage is available for revocable trust accounts only if the account satisfies certain requirements. First, the title of the account must include a term such as ''in trust for'' or ''payable-on-death to'' (or corresponding acronym). Second, each beneficiary must be either the owner's spouse, child, grandchild, parent or sibling. Third, the beneficiaries must be specifically named in the deposit account records of the depository institution. And fourth, the account must evidence an intent that the funds shall belong unconditionally to the designated beneficiaries upon the owner's death. 12 CFR 330.10(a) and (b).

As noted, the most common form of revocable trust account is the POD account, consisting simply of a signature card. With POD accounts, the fourth requirement for per-beneficiary coverage does not present a problem because the signature card normally will not include any conditions upon the interests of the designated beneficiaries. In other words, the signature card provides that the funds shall belong to the beneficiaries upon the owner's death. In contrast, many living trust agreements provide, in effect, that the funds might belong to the beneficiaries depending on various conditions. The FDIC refers to such conditions as ''defeating contingencies'' if they create the possibility that the beneficiaries may never receive the funds following the owner's death.

Living trust accounts started to emerge in the late 1980s and early 1990s. At that time, the FDIC responded to a significant number of questions about the insurance coverage of such accounts, often times reviewing the actual trust agreements to determine whether the requirements for per-beneficiary insurance were satisfied. In the FDIC's review of numerous such trusts, it determined that many of the trusts included conditions that needed to be satisfied before the named beneficiaries would become the owners of the trust assets. For example, some trusts required that the trust assets first be used to satisfy legacies in the grantor's will; the remaining assets, if any, would then be distributed to the trust beneficiaries. Other trusts provided that, in order to receive any benefit under the trust, the beneficiary must graduate from college. Because of the prevalence of defeating contingencies among living trust agreements and the increasing number of requests to render opinions on the insurance coverage of specific living trust accounts, in 1994 the FDIC issued ''Guidelines for Insurance Coverage of Revocable Trust Accounts (Including ''Living Trust'' Accounts).'' FDIC Advisory Opinion 94–32 (May 18, 1994). As part of its overall simplification of the deposit insurance regulations, in 1998 the FDIC revised § 330.10 to include a provision explaining the insurance coverage rules for living trust accounts. 12 CFR 330.10(f). That provision included a definition of defeating contingencies.

Despite the FDIC's issuance of guidelines on the insurance coverage of living trust accounts and its inclusion of a special provision in the insurance regulations explaining the coverage of these accounts, there still is significant public and industry confusion about how the insurance rules apply to living trust accounts. Time has shown that the basic rules on the coverage of POD accounts are not fully adaptable to living trust accounts. The POD rules were written to apply to signature-card accounts, not lengthy, detailed trust documents. Because living trust accounts and PODs are subject to the same insurance rules and analysis, depositors and bankers often mistakenly believe that living trust accounts are automatically insured up to $100,000 per qualifying beneficiary without regard to any terms in the trust that might prevent the beneficiary from ever receiving the funds. Our experience indicates that in a significant number of cases that is not so under existing rules. Because of the existence of defeating contingencies in the trust agreement, a living trust account often fails to satisfy the requirements for per-beneficiary coverage. Thus, the funds in the account are treated as the owner's single-ownership funds and, after being added to any other single-ownership funds the owner has at the same institution, insured to a limit of $100,000. The funds in a non-qualifying living trust account with more than one owner are deemed the single-ownership funds of each owner, with the corresponding attribution of the funds to each owner's single-ownership accounts.

The FDIC recognizes that the rules governing the insurance of living trust accounts are complex and confusing. Under the current rules, the amount of insurance coverage for a living trust account can only be determined after the trust document has been reviewed to determine whether there are any defeating contingencies. Consequently, in response to questions about coverage of living trust accounts, the FDIC can only advise depositors and bankers that they should assume that such accounts will be insured for no more than $100,000 per grantor, assuming the grantor has no single-ownership funds in the same depository institution. Otherwise, the FDIC suggests that the owners of living trust accounts seek advice from the attorney who prepared the trust document. Depositors who contact the FDIC about their living trust insurance coverage are often troubled to learn that they cannot definitively determine the amount of their coverage without a legal analysis of their trust document. Also, when a depository institution fails the FDIC must review each living trust to determine whether the beneficiaries' interests are subject to defeating contingencies. This often is a time-consuming process, sometimes resulting in a significant delay in making deposit insurance payments to living trust account owners.

II. The Proposed Rule

In the proposed rule issued in June 2003, the FDIC identified and requested comments on what it believed to be two viable alternatives to address the confusion surrounding the insurance coverage of living trust accounts.

The first alternative provided for coverage up to $100,000 per qualifying beneficiary named in the living trust irrespective of defeating contingencies (''Alternative One'').

The FDIC would identify the beneficiaries and their ascertainable interests in the trust from the depository institution's account records and provide coverage on the account up to $100,000 per qualifying beneficiary. As with POD accounts, under Alternative One insurance coverage would be provided up to $100,000 per qualifying beneficiary limited to each beneficiary's ascertainable interest in the trust.

Alternative One expressly required that the deposit account records of the institution indicate the ownership interest of each beneficiary in the living trust. The information could be in the form of the dollar amount of each beneficiary's interest or on a percentage basis relative to the total amount of the trust assets. The FDIC requested specific comments on how such a recordkeeping requirement should be satisfied when a trust provided for different levels of beneficiaries whose interests in the trust depend on certain conditions, including the death of a ''higher-tiered'' beneficiary. In the proposed rule the FDIC noted that Alternative One generally would result in an increase in deposit insurance coverage because, unlike under the current rules, beneficiaries would not be required to have an unconditional interest in the trust in order for the account to qualify for per-beneficiary coverage.

The second alternative in the proposed rule provided, in essence, for a separate category of ownership for living trust accounts, insuring such accounts up to $100,000 per account owner (''Alternative Two''). An individual grantor would be insured up to a total of $100,000 for all living trust accounts he or she had at the same depository institution, regardless of the number of beneficiaries named in the trust, the grantor's relationship to the beneficiaries and whether there were any defeating contingencies in the trust. The coverage for a living trust account would be separate from the coverage afforded to any single-ownership accounts or qualifying joint accounts the owner might have at the same depository institution. Where there were joint owners of a living trust account, the account would be insured up to $100,000 per grantor. Such accounts also would be separately insured from any joint accounts either grantor might have at the same insured depository institution. In the proposed rule the FDIC noted that Alternative Two likely would result in reduced coverage for owners of living trusts naming more than one qualifying beneficiary because per-beneficiary coverage would be eliminated.

III. Comments on the Proposed Rule

The FDIC received forty-three comments on the proposed rule. Thirty-seven comments were from banks and savings associations and six were from state and national depository institution trade associations. Twenty-five comments were in favor of Alternative One or a modified version of that alternative and sixteen were in favor of Alternative Two. Two comments discussed the characteristics of both alternatives without expressing a preference for either one. Many of the comments on the proposed rule praised the FDIC for attempting to simplify and clarify the living trust rules. All the comment letters are available on the FDIC Web site, *http://www.fdic.gov/regulations/laws/federal/propose.html.*

Seventeen comments expressed support for Alternative One as proposed. In general, those commenters said Alternative One would provide more coverage for depositors than Alternative Two and would be more in line with the current coverage available for POD accounts. As such, depositors would not have to place their money with more than one institution or through deposit brokers to obtain full insurance coverage on their deposits. Along these lines, two commenters mentioned that Alternative One would assist depositors in estate-planning efforts by allowing them to place a sizable portion of their assets at one insured institution. Several comments lauded the certainty provided by Alternative One. One stated that ''[Alternative One] provides the amount of coverage and the clarity and understanding of living trust accounts that our customers deserve.'' Another argued that it would be inequitable to treat POD accounts and living trust accounts differently because they both

are in the owner's control during his or her lifetime and may be modified at any time prior to the owner's death.

Eight of the twenty-five commenters who supported Alternative One, however, expressed concerns about certain aspects of the alternative and asked the FDIC to modify Alternative One before finalizing it. One state financial institution trade association voiced strong opposition to ''any requirement for financial institutions to: Obtain any part of a trust document; provide a certification of trust existence; and specifically identify a qualifying beneficiary's interest in trust assets or relationship to the grantor(s).''

A national depository institutions trade group cautioned that the proposed recordkeeping requirements might jeopardize the protections afforded under certain state laws for financial institutions in dealing with trusts. It cited ''compelling practical reasons'' against the proposed recordkeeping requirements in Alternative One, noting that:

- Unlike POD accounts, for which the only document is the institution's account—opening record, living trusts can be lengthy, complicated documents that identify multiple tiers of beneficiaries.
- It is often difficult for bankers to get information from accountholders who may be confused by the complexity and terminology of their living trust documents.
- Living trusts can be amended or revoked at any time and depository institutions should not be expected to repeatedly contact their customers to determine whether their account information is current.
- Customers might perceive such recordkeeping requirements as an invasion of privacy.

Two other trade associations and several depository institutions echoed these views.

Many of the commenters in favor of Alternative One without the proposed recordkeeping requirements suggested that the FDIC continue its current practice of ascertaining the existence of living trust beneficiaries and kinship information at the time an institution is closed. In addition to making the same points on the recordkeeping requirements as those noted above, another national trade association representing community banks said ''we do not see how the FDIC can avoid the time-consuming process of reviewing trust agreements when a bank failure occurs.''

Sixteen comments were in favor of Alternative Two. Generally, the consensus among these comments was, as expressed by one community banker, ''[Alternative Two is] easier [than Alternative One] to explain to the depositor and for the bank to keep track of.'' Another community banker described the option as ''straightforward.'' A common point made by several commenters was that, because of the simplicity of Alternative Two, depositors would be able to make an informed decision in placing living trust funds with depository institutions. Another community banker noted that Alternative Two would be the ''simplest, easiest and cleanest method'' of insuring living trust deposits and added that ''[w]e are not lawyers nor tax accountants and we should not have to 'dive' into someone's trust papers and try to decide how many beneficiaries, the relationships (of the parties) and if there are contingencies in the trust.''

Three commenters who favored Alternative Two suggested that under Alternative Two the insurance coverage for living trust accounts be increased to $200,000 to address the reduction in coverage some depositors might experience as a result of the rule change. *(This is not a viable option for the FDIC because it would take an act of Congress to increase the basic deposit insurance amount.)*

A large regional bank commented that Alternative Two ''appears to be the fairest treatment of these accounts as it treats them more like individual accounts. Since revocable accounts are generally used for the primary benefit of one, or sometimes two individuals, this seems more in line with policy of FDIC insurance than Alternative One.''

Many comments in support of Alternative Two acknowledged that Alternative One also offered advantages to depositors and would be an improvement over the current rule, but noted that Alternative One would place an added burden on financial institutions by imposing new recordkeeping requirements and would place institutions in the position of requesting information from depositors that they likely would be unwilling or unable to provide for privacy and other reasons. One medium-sized institution favored Alternative Two because ''we wouldn't have to track the names of the trust beneficiaries and their various interests.'' A community banker voiced support for Alternative Two, saying it would be ''easier to understand by the customer and bank personnel.'' She noted that customers would have the option to open POD accounts to obtain separate per-beneficiary POD coverage.

IV. The Final Rule

A. General Explanation

Upon considering the comments on the proposed rule, the FDIC has revised the current living trust account rules to provide for insurance coverage of up to $100,000 per qualifying beneficiary who, as of the date of an institution failure, would become entitled to the living trust assets upon the owner's death. This is a modified version of Alternative One in the proposed rule, based in part on a comment from a community banker that living trust coverage be based on beneficiaries ''without death related contingencies.'' Under the final rule, coverage will be determined on the interests of qualifying beneficiaries irrespective of defeating contingencies. A beneficiary whose trust interest is dependent on the death of another trust beneficiary, however, will not qualify.

For example, an account for a living trust providing that the trust assets go in equal shares to the owner's three children upon the owner's death would be eligible for $300,000 of deposit insurance coverage. If the trust provides that the funds would go to the children only if they each graduate from college prior to the owner's death, the coverage would still be $300,000, because defeating contingencies will no longer be relevant for deposit insurance purposes. Another example is where a trust provides that the owner's spouse becomes the owner of the trust assets upon the owner's death but, if the spouse predeceases the owner, the three children then become the owners of the assets. If the spouse is alive when the institution fails, the account will be insured up to a maximum of $100,000, because only the spouse is entitled to the assets upon the owner's death. If at the time of the institution failure, however, the spouse has predeceased the owner, then the account would be eligible for up to $300,000 coverage because there would be three qualifying beneficiaries entitled to the trust assets upon the owner's death.

In developing the final rule the FDIC was guided by two interwoven objectives: To simplify the existing rules and to provide coverage similar to POD account coverage. The FDIC believes the final rule achieves these objectives because it is reasonably straight-forward and because, as with POD accounts, coverage is based on the actual interests of qualifying beneficiaries. The final rule is similar to Alternative One but provides coverage based on qualifying beneficiaries who have an immediate interest in the trust assets upon the grantor's death. This concept is the

same as the coverage theory applicable to POD accounts: To provide coverage based on the interests of the beneficiaries who will receive the account funds when the owner dies, determined as of the date of the institution failure. Alternative One could have allowed for potentially open-ended coverage in some situations, particularly where a trust provided for tiered, or sequential, beneficiaries whose interests in the trust depend on whether ''higher-tiered'' beneficiaries predecease them.

Moreover, Alternative One would have required that a depository institution's deposit account records indicate the name and ascertainable interest of each qualifying beneficiary in the trust. The FDIC was persuaded by a majority of comments contending that requiring institutions to maintain records on the names of living trust beneficiaries and their interests in the respective trusts would be unnecessary and burdensome. The FDIC agrees with the industry assessment of that proposed requirement because the grantor of a living trust might during his or her lifetime change the trust beneficiaries and modify the terms of the trust. Requiring the grantor to inform a depository institution of these changes and requiring depository institutions to maintain records on such information is impractical and unnecessarily burdensome. Hence, a key feature of the final rule is that it requires no recordkeeping requirement other than an indication on a depository institution's records that the account is a living trust account. Upon an institution failure, FDIC claims agents would identify the beneficiaries and determine their interests by reviewing the trust agreement obtained from the depositor. At that time depositors would attest to their relationship to the named beneficiaries.

In the final rule the FDIC has eliminated an unnecessary recordkeeping requirement. Specifically, the names of living trust beneficiaries will no longer have to be recorded in the deposit account records of an insured institution in order for the account to qualify for the deposit insurance provided for living trust accounts. The removal of this recordkeeping requirement supports the ongoing efforts of the FDIC and the other federal banking regulators, under the Economic Growth and Regulatory Paperwork Reduction Act (''EGRPRA''), to eliminate unnecessary regulatory requirements. Detailed information about the EGRPRA project is available at *http://www.egrpra.gov.*

The FDIC believes deposit insurance coverage under the final rule would match the coverage many depositors now expect for their living trust accounts. Generally, depositors believe that living trust coverage is essentially the same as POD account coverage. In other words, insurance is based on the number of qualifying beneficiaries with an ownership interest in the account, regardless of any conditions, or contingencies, affecting those interests. The final rule will match those expectations because it provides coverage more closely aligned with POD coverage than the former rules. The FDIC believes the final rule will provide bankers and depositors with a better understanding of the living trust account deposit insurance rules and will help to eliminate the present confusion surrounding the coverage of living trust accounts.

B. Treatment of Non-Qualifying Beneficiaries

The treatment of non-qualifying beneficiaries under the final rule will be the same as under the current POD rules. Interests of non-qualifying beneficiaries in a living trust will be insured as the owner's single-ownership (or individual) funds. As such, those interests will be added to any other single-ownership funds the owner holds at the same institution and insured to a total of $100,000 in that account-ownership capacity. For example, assume a living trust provides that the grantor's assets shall belong equally to her husband and nephew upon her death. A living trust account with a balance of $200,000 held for that trust would be insured for at least $100,000 because there is one qualifying beneficiary (the grantor's spouse) who, upon the institution failure, would be entitled to the funds upon the grantor's death. Because the nephew is a non-qualifying beneficiary, the $100,000 attributable to him would be insured as the grantor's single-ownership funds. If the grantor has no other single-ownership funds at the institution, the full $200,000 of the living trust account would be insured—$100,000 under the grantor's revocable trust ownership capacity and $100,000 under the grantor's single-ownership capacity. If, however, the grantor also has a single-ownership account with a balance of, say, $20,000, the $100,000 of the living trust account attributable to the nephew would be added to that amount and the combined amount, in the grantor's single-ownership capacity, would be insured to a limit of $100,000, leaving $20,000 uninsured. This result and calculation methodology is the same as under the current rules for POD accounts.

C. Treatment of Life-Estate and Remainder Interests

Living trusts sometime provide for a life estate interest for designated beneficiaries and a remainder interest for other beneficiaries. The final rule addresses this situation by deeming each life-estate holder and each remainder-man to have an equal interest in the trust assets. Insurance is then provided up to $100,000 per qualifying beneficiary. For example, assume a grantor creates a living trust providing for his wife to have a life-estate interest in the trust assets with the remaining assets going to their two children upon the wife's death. The assets in the trust are $300,000 and a living trust account is opened for that full amount. Unless otherwise indicated in the trust, the FDIC would deem each of the beneficiaries (all of whom here are qualifying beneficiaries) to own an equal share of the $300,000; hence, the full amount would be insured. This result would be the same even if the wife has the power to invade the principal of the trust, inasmuch as under the final rule defeating contingencies are no longer relevant for insurance purposes.

Another example would be where the living trust provides for a life estate interest for the grantor's spouse and remainder interests for two nephews. In that situation the method for determining coverage would be the same as that indicated above: Unless otherwise indicated, each beneficiary would be deemed to have an equal ownership interest in the trust assets and coverage would be provided accordingly. Here the life-estate holder is a qualifying beneficiary (the grantor's spouse) but the remainder-men (the grantor's nephews) are not. As such (assuming an account balance of $300,000), the living trust account would be insured for at least $100,000 because there is one qualifying beneficiary (the grantor's spouse). The $200,000 attributable to the grantor's nephews would be insured as the grantor's single-ownership funds. If the grantor has no other single-ownership funds at the same institution, then $100,000 would be insured as the grantor's single-ownership funds. Thus, the $300,000 in the living trust account would be insured for a total of $200,000 and $100,000 would be uninsured. The FDIC believes this is a simple, balanced approach to insuring living trust accounts where the living trust provides for one or more life estate interests.

V. Effective Date

The final rule will become effective on April 1, 2004, the beginning of the first calendar quarter following the publication date of the final rule. The final rule will apply as of that date to all living trust accounts unless, upon a depository institution failure, a depositor who established a living trust account before April 1, 2004, chooses coverage under the previous living trust account rules. For any depository institution failures occurring between January 13, 2004, and April 1, 2004, the FDIC will apply the final rule if doing so would benefit living trust account holders of such failed institutions.

VI. Paperwork Reduction Act

The final rule will simplify the FDIC's regulations governing the insurance of living trust accounts. It will not involve any new collections of information pursuant to the Paperwork Reduction Act (44 U.S.C. 3501 *et seq.*). Consequently, no information has been submitted to the Office of Management and Budget for review.

VII. Regulatory Flexibility Act

The FDIC certifies that the final rule will not have a significant economic impact on a substantial number of small businesses within the meaning of the Regulatory Flexibility Act (5 U.S.C. 605(b)). The amendments to the deposit insurance rules will apply to all FDIC-insured depository institutions, including those within the definition of ''small businesses'' under the Regulatory Flexibility Act. The final rule eliminates an existing requirement for all FDIC-insured institutions to designate living trust beneficiaries in deposit account records. This change in recordkeeping will result in a marginal reduction in time and effort for depository institution staff which will not significantly affect compliance costs. The rule imposes no new reporting, recordkeeping or other compliance requirements. Accordingly, the Act's requirements relating to an initial and final regulatory flexibility analysis are not applicable.

VIII. The Treasury and General Government Appropriations Act, 1999—Assessment of Federal Regulations and Policies on Families

The FDIC has determined that the final rule will not affect family well-being within the meaning of section 654 of the Treasury and General Government Appropriations Act, enacted as part of the Omnibus Consolidated and Emergency Supplemental Appropriations Act of 1999 (Pub. L. 105–277, 112 Stat. 2681).

IX. Small Business Regulatory Enforcement Fairness Act

The Office of Management and Budget has determined that the final rule is not a ''major rule'' within the meaning of the relevant sections of the Small Business Regulatory Enforcement Fairness Act of 1996 (''SBREFA'') (5 U.S.C. 801 *et seq.*). As required by SBFERA, the FDIC will file the appropriate reports with Congress and the General Accounting Office so that the final rule may be reviewed.

List of Subjects in 12 CFR Part 330

Bank deposit insurance, Banks, banking, Reporting and recordkeeping requirements, Savings and loan associations, Trusts and trustees.

■ For the reasons stated above, the Board of Directors of the Federal Deposit Insurance Corporation hereby amends part 330 of chapter III of title 12 of the Code of Federal Regulations as follows:

PART 330—DEPOSIT INSURANCE COVERAGE

■ 1. The authority citation for part 330 continues to read as follows:

Authority: 12 U.S.C. 1813(l), 1813(m), 1817(i), 1818(q), 1819 (Tenth), 1820(f), 1821(a), 1822(c).

■ 2. Section 330.10(f) is revised to read as follows:

§ 330.10 Revocable trust accounts.

* * * * *

(f) *Living trust accounts.* (1) This section also applies to revocable trust accounts held in connection with a formal revocable trust created by an owner/grantor and over which the owner/grantor retains ownership during his or her lifetime. These trusts are usually referred to as living trusts. If a named beneficiary in a living trust is a qualifying beneficiary under this section, then the account held in connection with the living trust is eligible for the per-qualifying-beneficiary coverage described in paragraph (a) of this section. This coverage will apply only if, at the time an insured depository institution fails, a qualifying beneficiary would be entitled to his or her interest in the trust assets upon the grantor's death and that ownership interest would not depend on the death of another trust beneficiary. If there is more than one grantor, then the beneficiary's entitlement to the trust assets must be upon the death of the last grantor. The coverage provided in this paragraph (f) shall be irrespective of any other conditions in the trust that might prevent a beneficiary from acquiring an interest in the deposit account upon the account owner's death.

(*Example 1:* A is the owner of a living trust account with a deposit balance of $300,000. The trust provides that, upon A's death, her husband shall receive $100,000 and each of their two children shall receive $100,000, but only if the children graduate from college by age twenty-four. Assuming A has no other revocable trust accounts at the same depository institution, the coverage on her living trust account would be $300,000. The trust names three qualifying beneficiaries. Coverage would be provided up to $100,000 per qualifying beneficiary regardless of any contingencies.)

(*Example 2:* B is the owner of a living trust account with a deposit balance of $200,000. The trust provides that, upon B's death, his wife shall receive $200,000 but, if the wife predeceases B, each of the two children shall receive $100,000. Assuming B has no other revocable trust accounts at the same depository institution and his wife is alive at the time of the institution failure, the coverage on his living trust account would be $100,000. The trust names only one beneficiary (B's spouse) who would become the owner of the trust assets upon B's death. If when the institution fails B's wife has predeceased him, then the account would be insured to $200,000 because the two children would be entitled to the trust assets upon B's death.)

(2) The rules in paragraph (c) of this section on the interest of non-qualifying beneficiaries apply to living trust accounts. (*Example:* C is the owner of a living trust account with a deposit balance of $200,000. The trust provides that upon C's death his son shall receive $100,000 and his nephew shall receive $100,000. The account would be insured for *at least* $100,000 because one qualifying beneficiary (C's son) would become the owner of trust interests upon C's death. Because the nephew is a non-qualifying beneficiary entitled to receive an interest in the trust upon C's death, that interest would be considered C's single-ownership funds and insured with any other single-ownership funds C might have at the same institution. Assuming C has no other single-ownership funds at the institution, the full $200,000 in the living trust account would be insured ($100,000 in C's revocable trust account ownership capacity and $100,000 in C's single-ownership account capacity).

(3) For living trusts accounts that provide for a life-estate interest for designated beneficiaries and a remainder interest for other beneficiaries, unless otherwise indicated in the trust, each life-estate holder and each remainder-man will be deemed to have equal interests in the trust assets for deposit insurance purposes. Coverage will then be provided under the rules in this

paragraph (f) up to $100,000 per qualifying beneficiary.

(*Example 1:* D creates a living trust providing for his wife to have a life-estate interest in the trust assets with the remaining assets going to their two children upon the wife's death. The assets in the trust are $300,000 and a living trust deposit account is opened for that full amount. Unless otherwise indicated in the trust, each beneficiary (all of whom here are qualifying beneficiaries) would be deemed to own an equal share of the $300,000; hence, the full amount would be insured. This result would be the same even if the wife has the power to invade the principal of the trust, inasmuch as defeating contingencies are not relevant for insurance purposes.)

(*Example 2:* E creates a living trust providing for a life estate interest for her spouse and remainder interests for two nephews. The life estate holder is a qualifying beneficiary (E's spouse) but the remainder-men (E's nephews) are not. Assuming a deposit account balance of $300,000, the living trust account would be insured for *at least* $100,000 because there is one qualifying beneficiary (E's spouse). The $200,000 attributable to E's nephews would be insured as E's single-ownership funds. If E has no other single-ownership funds at the same institution, then $100,000 would be insured separately as E's single-ownership funds. Thus, the $300,000 in the living trust account would be insured for a total of $200,000 and $100,000 would be uninsured.)

(4) In order for a depositor to qualify for the living trust account coverage provided under this paragraph (f), the title of the account must reflect that the funds in the account are held pursuant to a formal revocable trust. There is no requirement, however, that the deposit accounts records of the depository institution indicate the names of the beneficiaries of the living trust and their ownership interests in the trust.

(5) Effective April 1, 2004, this paragraph (f) shall apply to all living trust accounts, unless, upon a depository institution failure, a depositor who established a living trust account before April 1, 2004, chooses coverage under the previous living trust account rules. For any depository institution failures occurring between January 13, 2004 and April 1, 2004, the FDIC shall apply the living trust account rules in this revised paragraph (f) if doing so would benefit living trust account holders of such failed institutions.

* * * * *

Dated at Washington, DC, this 13th day of January, 2004.

By order of the Board of Directors.

Federal Deposit Insurance Corporation.

Robert E. Feldman,

Executive Secretary.

[FR Doc. 04–1198 Filed 1–20–04; 8:45 am]

BILLING CODE 6714–01–P

DEPARTMENT OF TRANSPORTATION

Federal Aviation Administration

14 CFR Part 95

[Docket No. 30402; Amdt. No. 446]

IFR Altitudes; Miscellaneous Amendments

AGENCY: Federal Aviation Administration (FAA), DOT.

ACTION: Final rule.

SUMMARY: This amendment adopts miscellaneous amendments to the required IFR (instrument flight rules) altitudes and changeover points for certain Federal airways, jet routes, or direct routes for which a minimum or maximum en route authorized IFR altitude is prescribed. This regulatory action is needed because of changes occurring in the National Airspace System. These changes are designed to provide for the safe and efficient use of the navigable airspace under instrument conditions in the affected areas.

EFFECTIVE DATE: 0901 UTC, February 19, 2004.

FOR FURTHER INFORMATION CONTACT: Donald P. Pate, Flight Procedure Standards Branch (AMCAFS–420), Flight Technologies and Programs Division, Flight Standards Service, Federal Aviation Administration, Mike Monroney Aeronautical Center, 6500 South MacArthur Blvd., Oklahoma City, OK 73169 (Mail Address: P.O. Box 25082, Oklahoma City, OK 73125) telephone: (405) 954–4164.

SUPPLEMENTARY INFORMATION: This amendment to part 95 of the Federal Aviation Regulations (14 CFR part 95) amends, suspends, or revokes IFR altitudes governing the operation of all aircraft in flight over a specified route or any portion of that route, as well as the changeover points (COPs) for Federal airways, jet routes, or direct routes as prescribed in part 95.

The Rule

The specified IFR altitudes, when used in conjunction with the prescribed changeover points for those routes, ensure navigation aid coverage that is adequate for safe flight operations and free of frequency interference. The reasons and circumstances that create the need for this amendment involve matters of flight safety and operational efficiency in the National Airspace System, are related to published aeronautical charts that are essential to the user, and provide for the safe and efficient use of the navigable airspace. In addition, those various reasons or circumstances require making this amendment effective before the next scheduled charting and publication date of the flight information to assure its timely availability to the user. The effective date of this amendment reflects those considerations. In view of the close and immediate relationship between these regulatory changes and safety in air commerce, I find that notice and public procedure before adopting this amendment are impracticable and contrary to the public interest and that good cause exists for making the amendment effective in less than 30 days.

Conclusion

The FAA has determined that this regulation only involves an established body of technical regulations for which frequent and routine amendments are necessary to keep them operationally current. It, therefore—(1) is not a ''significant regulatory action'' under Executive Order 12866; (2) is not a ''significant rule'' under DOT Regulatory Policies and Procedures (44 FR 11034; February 26, 1979); and (3) does not warrant preparation of a regulatory evaluation as the anticipated impact is so minimal. For the same reason, the FAA certifies that this amendment will not have a significant economic impact on a substantial number of small entities under the criteria of the Regulatory Flexibility Act.

List of Subjects in 14 CFR Part 95

Airspace, Navigation (air).

Issued in Washington, DC on January 13, 2004.

James J. Ballough,

Director, Flight Standards Service.

Adoption of the Amendment

■ Accordingly, pursuant to the authority delegated to me by the Administrator, part 95 of the Federal Aviation Regulations (14 CFR part 95) is amended as follows effective at 0901 UTC.

■ 1. The authority citation for part 95 continues to read as follows:

Authority: 49 U.S.C. 106(g), 40103, 40106, 40113, 40114, 40120, 44502, 44514, 44719, 44721.

■ 2. Part 95 is amended to read as follows:

REVISIONS TO IFR ALTITUDES AND CHANGEOVER POINTS

[Amendment 466; Effective Date February 19, 2004]

From	To	MEA
§ 95.6001 Victor Routes—U.S.		
§ 95.6014 VOR Federal Airway 14 Is Amended to Read in Part		
Will Rogers, OK VORTAC	Totes, OK FIX	*3,700
*3,000–MOCA		
Totes, OK FIX	Drops, OK FIX	*3,700
*2,500–MOCA		
Drops, OK FIX	Tulsa, OK VORTAC	2,600
§ 95.6071 VOR Federal Airway 71 is Amended To Read in Part		
Lincoln, NE VORTAC	Dwell, NE FIX	*3,300
*2,600–MOCA		
Dwell, NE FIX	Columbus, NE VOR/DME	*3,500
*3,000–MOCA		
§ 95.6165 VOR Federal Airway 165 Is Amended To Read in Part		
Bottl, OR FIX	Waldo, OR FIX	12,500
Waldo, OR FIX	Elkes, OR FIX.	
	NW BND	7,800
	SE BND	12,500

[FR Doc. 04–1301 Filed 1–16–04; 10:59 am]

BILLING CODE 4910–13–P

NATIONAL AERONAUTICS AND SPACE ADMINISTRATION

14 CFR Part 1260

RIN 2700–AC95

NASA Grant and Cooperative Agreement Handbook—Central Contractor Registration

AGENCY: National Aeronautics and Space Administration (NASA).

ACTION: Final rule.

SUMMARY: This final rule amends the NASA Grant and Cooperative Agreement Handbook (Handbook) by requiring applicants for grants and cooperative agreements to include their Dun and Bradstreet, Data Universal Numbering System (DUNS) number in their proposal submissions; and register in the Central Contractor Registration (CCR) database prior to submitting a proposal instead of before award. This change is required to prepare for NASA integration with the interagency portal for grant application submission at *http://www.grants.gov.*

EFFECTIVE DATE: January 21, 2004.

FOR FURTHER INFORMATION CONTACT: Suzan P. Moody, NASA Headquarters, Code HK, Washington, DC, (202) 358–0503, e-mail: *Suzan.P.Moody@nasa.gov.*

SUPPLEMENTARY INFORMATION:

A. Background

The Handbook currently requires grant officers to use DUNS numbers to verify that prospective awardees are registered in the CCR database. This policy effectively requires applicants to obtain a DUNS number and register in the CCR database prior to award but not necessarily prior to proposal submission. This change to the Handbook will to require applicants to complete these requirements prior to proposal submission. This change is made in preparation for NASA integration with the interagency portal for grant application submission at *http://www.grants.gov*, and is necessary because Grants.gov plans to require CCR registration. Additionally, administrative changes are made to update the CCR contact information and remove background information on the Integrated Financial Management (IFM) system to reflect agency-wide implementation of the IFM system.

B. Regulatory Flexibility Act

NASA certifies that this final rule will not have a significant economic impact on a substantial number of small entities within the meaning of the Regulatory Flexibility Act, 5 U.S.C. 601 *et seq.*, because the changes do not impose additional requirements. The changes only modify the timing of existing requirements.

C. Paperwork Reduction Act

The Paperwork Reduction Act does not apply because this final rule does not impose any new recordkeeping or information collection requirements, or collection of information from offerors, contractors, or members of the public that require the approval of the Office of Management and Budget under 44 U.S.C. 3501, *et seq.*

List of Subjects in 14 CFR Part 1260

Grant Programs—Science and Technology.

Tom Luedtke,

Assistant Administrator for Procurement.

■ Accordingly, 14 CFR Part 1260 is amended as follows:

PART 1260—GRANTS AND COOPERATIVE AGREEMENTS

■ 1. The authority citation for 14 CFR part 1260 continues to read as follows:

Authority: 42 U.S.C. 2473(c)(1), Pub. L. 97–258, 96 Stat. 1003 31 U.S.C. 6301, *et seq.*

■ 2. Revise paragraph (b)(3) in § 1260.10 to read as follows:

§ 1260.10 Proposals.

* * * * *

(b) * * *

(3) A Dun and Bradstreet, Data Universal Numbering System (DUNS) number shall be included on the Cover Page of all proposal submissions. Before submitting a proposal, all applicants shall have an active registration in the Department of Defense, Central Contractor Registration (CCR) database and shall obtain a Commercial And Government Entity (CAGE) code. Prior to award, the grant officer shall verify active registration in the CCR database, by using the DUNS number or, if

applicable, the DUNS+4 number, via the Internet at *http://www.ccr.gov* or by calling toll free: (888) 227–2423, commercial: (269) 961–5757.

* * * * *

[FR Doc. 04–1209 Filed 1–20–04; 8:45 am]

BILLING CODE 7510–01–P

DEPARTMENT OF JUSTICE

28 CFR Parts 31, 33, 38, 90, 91, and 93

[Docket No. OAG 106; AG Order No. 2703–2004]

RIN 1105–AA83

Participation in Justice Department Programs by Religious Organizations; Providing for Equal Treatment of All Justice Department Program Participants

AGENCY: Office of the Attorney General, Justice.

ACTION: Final rule.

SUMMARY: This final rule implements executive branch policy that, within the framework of constitutional church-state guidelines, religiously affiliated (or ''faith-based'') organizations should be able to compete on an equal footing with other organizations for the Department's funding. It revises Department regulations to remove barriers to the participation of faith-based organizations in Department programs and to ensure that these programs are implemented in a manner consistent with the requirements of the Constitution, including the Religion Clauses of the First Amendment.

DATES: Effective Date: February 20, 2004.

FOR FURTHER INFORMATION CONTACT: Patrick Purtill, Director, Task Force for Faith-Based and Community Initiatives, Department of Justice, Room 4409, 950 Pennsylvania Avenue, NW., Washington, DC 20530; telephone: (202) 305–8283 (this is not a toll-free number). Hearing or speech-impaired individuals may access this telephone number via TTY by calling the toll-free Federal Information Relay Service at 1–800–877–8339. For program-specific information, contact the following offices: Office of Justice Programs—Bureau of Justice Assistance, (202) 307–0635; Office of Juvenile Justice and Delinquency Prevention, (202) 307–5924; National Institute of Justice, (202) 307–2942; Office for Victims of Crime, (202) 514–4696; Office on Violence Against Women, (202) 307–6026; Executive Office for Weed and Seed, (202) 616–1152; Bureau of Prisons, (202) 307–3198; National Institute of Corrections, (202) 307–3106; Community Oriented Policing Services (COPS), (202) 307–1480. These are not toll-free numbers. Hearing or speech-impaired individuals may access these telephone numbers via TTY by calling the toll-free Federal Information Relay Service at 1–800–877–8339.

SUPPLEMENTARY INFORMATION:

I. Background—The September 30, 2003 Proposed Rule

On September 30, 2003, the Department published a proposed rule (68 FR 56410) to amend Department regulations that imposed unwarranted barriers to the participation of faith-based organizations in Department programs. The proposed rule was part of the Department's effort to fulfill its responsibilities under two Executive Orders issued by President Bush. The first of these Orders, Executive Order 13198 of January 29, 2001, published in the **Federal Register** on January 31, 2001 (66 FR 8497), created Centers for Faith-Based and Community Initiatives in five cabinet departments—Housing and Urban Development, Health and Human Services, Education, Labor, and Justice—and directed these Centers to identify and eliminate regulatory, contracting, and other programmatic obstacles to the equal participation of faith-based and community organizations in the provision of social services by their Departments. The second of these Executive Orders, Executive Order 13279 of December 12, 2002, published in the **Federal Register** on December 16, 2002 (67 FR 77141), charged executive branch agencies to give equal treatment to faith-based and community groups that apply for funds to meet social needs in America's communities. President Bush thereby called for an end to discrimination against faith-based organizations and ordered implementation of these policies throughout the executive branch in a manner consistent with the First Amendment to the United States Constitution. He further directed that faith-based organizations be allowed to retain their religious autonomy over their internal governance and composition of boards, and over their display of religious art, icons, scriptures, or other religious symbols, when participating in government-funded programs. The Administration believes that there should be an equal opportunity for all organizations—both religious and nonreligious—to participate as partners in Federal programs.

Consistent with the President's initiative, the Department's proposed rule of September 30, 2003 proposed to remove unwarranted barriers to the participation of faith-based organizations by amending the regulations for the following Department offices:

1. Office of Justice Programs (OJP).
2. Bureau of Prisons (BOP).
3. National Institute of Corrections (NIC).
4. Community Oriented Policing Services (COPS).
5. Office on Violence Against Women (OVW).
6. United States Marshals Service.
7. Asset Forfeiture and Money Laundering Section of the Criminal Division.
8. Civil Rights Division.

The objective of the proposed rule was to ensure that these offices—and in particular the discretionary grants, formula grants, contracts, cooperative agreements, and other assistance administered through them—were open to all qualified organizations, regardless of their religious character, and to establish clearly the proper uses to which funds could be put and the conditions for receipt of funding. In addition, this proposed rule was designed to ensure that the implementation of the Department's programs would be conducted in a manner consistent with the requirements of the Constitution, including the Religion Clauses of the First Amendment. The proposed rule had the following specific objectives:

1. *Participation by faith-based organizations in Justice Department programs.* The proposed rule provided that organizations would be eligible to participate in Department programs without regard to their religious character or affiliation, and that organizations could not be excluded from the competition for Department funds simply because they were religious. Specifically, religious organizations would be eligible to compete for funding on the same basis, and under the same eligibility requirements, as all other nonprofit organizations. The Department, as well as State and local governments administering funds under Department programs, would be prohibited from discriminating against organizations on the basis of religion, religious belief, or religious character in the administration or distribution of Federal financial assistance, including grants, contracts, and cooperative agreements.

2. *Inherently religious activities.* The proposed rule described the requirements that would be applicable

to all recipient organizations regarding the use of Department funds for inherently religious activities. Specifically, a participating organization could not use direct financial assistance [1] from the Department to support inherently religious activities, such as worship, religious instruction, or proselytization. If the organization engaged in such activities, it would be required to offer them separately, in time or location, from the programs or services funded with direct Department assistance, and participation would have to be voluntary for the beneficiaries of the Department-funded programs or services. This requirement would ensure that direct financial assistance from the Department to religious organizations would not be used to support inherently religious activities. Such assistance could not be used, for example, to conduct worship services, prayer meetings, or any other activity that is inherently religious.

The proposed rule clarified that this restriction would not mean that an organization that received Department funds could not engage in inherently religious activities, but only that such an organization could not fund these activities with direct financial assistance from the Department. It further provided that these restrictions on inherently religious activities would not apply where Department funds were provided to religious organizations as a result of a genuine and independent private choice of a beneficiary (*e.g.,* under a program that gave a beneficiary a Department-funded voucher, coupon, certificate, or another funding mechanism designed to give that beneficiary a choice among providers) or through other indirect means, provided the religious organizations otherwise satisfied the secular requirements of the program. In addition, the proposed rule clarified that the legal restrictions applied to religious programs within correctional facilities would sometimes be different from the legal restrictions that are applied to other Department programs, on account of the fact that the degree of government control over correctional environments sometimes warrants affirmative steps by prison officials, in the form of chaplaincies and similar programs, to ensure that prisoners have access to opportunities to exercise their religion in the prison.

3. *Independence of faith-based organizations.* The proposed rule also clarified that a religious organization that participated in Department programs would retain its independence and could continue to carry out its mission, including the definition, practice, and expression of its religious beliefs, provided that it did not use direct financial assistance from the Department to support any inherently religious activities, such as worship, religious instruction, or proselytization. Among other things, a faith-based organization could use space in its facilities to provide Department-funded services without removing religious art, icons, scriptures, or other religious symbols. In addition, a Department-funded religious organization could retain religious terms in its organization's name, select its board members and otherwise govern itself on a religious basis, and include religious references in its organization's mission statements and other governing documents.

4. *Nondiscrimination in providing assistance.* The proposed rule provided that an organization that received direct financial assistance from the Department would not be allowed, in providing program assistance supported by such funding, to discriminate against a program beneficiary or prospective program beneficiary on the basis of religion or religious belief.

5. *Assurance requirements.* The proposed rule also directed the removal of provisions of the Department's agreements, covenants, memoranda of understanding, policies, or regulations that require only Department-funded religious organizations to provide assurances that they would not use monies or property for inherently religious activities. All organizations that participated in Department programs, including religious ones, would be required to carry out eligible activities in accordance with all program requirements and other applicable requirements governing the conduct of Department-funded activities, including those prohibiting the use of direct financial assistance from the Department to engage in inherently religious activities. In addition, to the extent that provisions of the Department's agreements, covenants, policies, or regulations disqualify religious organizations from participating in the Department's programs because they are motivated or influenced by religious faith to provide government-funded services, or because of their religious character or affiliation, the proposed rule would remove that restriction, which is inconsistent with governing law.

II. Discussion of Comments Received on the Proposed Rule

The Department received comments on the proposed rule from 9 commenters, all of which were interest groups or civil or religious liberties organizations. Some of the comments were generally supportive of the proposed rule; others were critical. The following is a summary of the comments, and the Department's responses.

Participation by Faith-Based Organizations in Justice Department Programs

Several commenters expressed appreciation and support for the Department's efforts to clarify the rules governing participation of faith-based organizations in its programs. Another commenter ''applauded'' the distinction made in the regulation between the content of social services provided by the religious organization and the motivation of that organization. The commenter pointed out that a faith-based organization's religious motivation should not constrain its ability to provide Department-funded services.

Other commenters disagreed with the proposed rule on the basis that it would allow Federal funds to be given to ''pervasively sectarian'' organizations. They maintained that the rule places no limitations on the kinds of religious organizations that can receive funds, and they requested that ''pervasively sectarian'' organizations be barred from receiving Department funds. Similarly, other commenters suggested that the proposed rule improperly allows direct grants of public funds to religious organizations in which religious missions overpower secular functions.

We do not agree that the Constitution requires the Department to distinguish between different religious organizations in providing funding for Department programs. Religious organizations that receive direct Department funds may not use such funds for inherently religious activities. These organizations must ensure that such religious activities are separate in time or location from services directly funded by the Department and must

[1] As in the proposed rule, the term ''direct financial assistance'' is used here to describe funds that are provided ''directly'' by a governmental entity or an intermediate organization with the same responsibilities as a governmental entity under a particular program, as opposed to funds that an organization receives as the result of the genuine and independent private choice of a beneficiary. In other contexts, the term ''direct financial assistance'' may be used to refer to those funds that an organization receives directly from the Federal Government (also known as ''discretionary'' funding), as opposed to funding that it receives from a State or local government (also known as ''indirect'' or ''block grant'' funding). Again, in these regulations, the term ''direct financial assistance'' has the former meaning.

also ensure that participation in such religious activities is voluntary. Furthermore, they are prohibited from discriminating against a program beneficiary on the basis of religion or a religious belief, and program participants that violate these requirements will be subject to applicable sanctions and penalties. The regulations thus ensure that there is no direct government funding of inherently religious activities, as required by current precedent. In addition, the Supreme Court's ''pervasively sectarian'' doctrine—which held that there are certain religious institutions in which religion is so pervasive that no government aid may be provided to them, because their performance of even ''secular'' tasks will be infused with religious purpose—no longer enjoys the support of a majority of the Court. Four Justices expressly abandoned it in *Mitchell* v. *Helms,* 530 U.S. 793, 825–829 (2000) (plurality opinion), and Justice O'Connor's opinion in that case, joined by Justice Breyer, set forth reasoning that is inconsistent with its underlying premises, *see id.* at 857–858 (O'Connor, J., concurring in judgment) (requiring proof of ''actual diversion of public support to religious uses''). Thus, six members of the Court have rejected the view that aid provided to religious institutions will invariably advance the institutions' religious purposes, and that view is the foundation of the ''pervasively sectarian'' doctrine. The Department therefore believes that under current precedent, the Department may fund all service providers, without regard to religion and free of criteria that require the provider to abandon its religious expression or character.

Another commenter stated that the rule bans discrimination against faith-based providers who apply to participate in Department-funded programs, but not discrimination ''in favor of'' such providers. The commenter suggested that we prohibit discrimination both ''in favor of'' and against faith-based providers.

We agree with the commenter and have therefore modified the language of the final rule to address this concern and to clarify that the requirement of nondiscrimination applies to both the Department and State or local officials administering Department funds. Section 38.2 of the final rule reads: ''Neither the Department nor any State or local government receiving funds under any Department program shall, in the selection of service providers, discriminate for or against an organization on the basis of the organization's religious character or affiliation.'' We do note, however, that while the final rule does not permit discrimination either in favor of or against religious providers, nothing in the rule precludes those administering Department-funded programs from accommodating religious organizations in a manner consistent with the Establishment Clause.

Inherently Religious Activities

Some commenters suggested that the proposed rule does not sufficiently detail the scope of religious content that must be omitted from government-funded programs. For example, some suggested that the explanation given of ''inherently religious activities'' as ''worship, religious instruction, or proselytization'' is unclear or incomplete. Relatedly, it was suggested that the proposed rule authorizes conduct that will impermissibly convey the message that the government endorses religious content. One commenter requested that the proposed rule be changed to make clear that the government may not disburse public funds to organizations that convey religious messages or in any way advance religion.

The Department disagrees with these comments. Concerning the rule's treatment of ''inherently religious'' activities, as the commenters' own submissions suggest, it would be difficult to establish an acceptable list of all inherently religious activities. Inevitably, the regulatory definition would fail to include some inherently religious activities or include certain activities that are not inherently religious. Rather than attempt to establish an exhaustive regulatory definition, the Department has decided to retain the language of the proposed rule, which provides examples of the general types of activities that are prohibited by the regulations. This approach is consistent with Supreme Court precedent, which likewise has not comprehensively defined inherently religious activities. For example, prayer and worship are inherently religious, but Department-funded services do not become inherently religious merely because they are conducted by individuals who are religiously motivated to undertake them or view the activities as a form of ''ministry.'' As to the suggestion that the rule indicates that the Department endorses religious content, it again merits emphasis that the rule forbids the use of direct government assistance for inherently religious activities and states that any such activities must be voluntary and separated, in time or location, from activities directly funded by the Department. Finally, there is no constitutional support for the view that the government must exclude from its programs those organizations that convey religious messages or advance religion with their own funds. As noted above, the Supreme Court has held that the Constitution forbids the use of direct government funds for inherently religious activities, but the Court has rejected the presumption that religious organizations will inevitably divert such funds and use them for their own religious purposes. The Department rejects the view that organizations with religious commitments cannot be trusted to fulfill their written promises to adhere to grant requirements.

Voucher-Style Programs Under the Rule

Some commenters claimed that the proposed rule authorizes a voucher program for religious organizations without instituting adequate constitutional safeguards and requested that the rule be revised to comply with the framework instituted by *Zelman* v. *Simmons* Harris, 536 U.S. 639 (2002). These commenters stated that secular alternatives are not available in the social service context, eliminating the possibility of real choice by program beneficiaries. They requested that the proposed rule clearly state that beneficiaries have the right to object to a religious provider assigned to them, to receive a secular provider, and that they be given notice of these rights.

The Department respectfully declines to adopt the recommendations of the commenters. First of all, the Department does not currently operate any voucher-style programs, so any regulations in this regard would be purely hypothetical. In addition, as the rule states, any voucher-style programs offered by the Department will comply with Federal law (including current precedent). The Department thus believes that the proposed rule adequately addresses these commenters' constitutional concerns.

The ''Separate, in Time or Location'' Requirement

Some commenters maintained that the proposed rule should be amended to clarify the ''separate, in time or location'' requirement. Additionally, some have suggested that the requirement be strengthened to require that inherently religious activities be ''separate by both time and location.''

The Department declines to adopt these suggestions. As an initial matter, the Department does not believe that the requirement is ambiguous or necessitates additional regulation for proper adherence. Where a religious

organization receives direct government assistance, any religious activities that the organization offers must simply be offered separately—in time or place—from the activities supported by direct government funds. As to the suggestion that the rule must require separation in both time and location, the Department believes that such a requirement is not legally necessary and would impose an unnecessarily harsh burden on small faith-based organizations, which may have access to only one location that is suitable for the provision of Department-funded services.

The Exemption of Chaplains From the Restriction on Direct Funding of ''Inherently Religious'' Activities

Some commenters have objected that chaplains who work in prisons, detention facilities, or community correction centers, and the religious or other organizations that assist chaplains in these places, should not be exempt from the ''inherently religious activities'' restrictions. One commenter would modify the proposed rule to allow only clergy, but not the organizations that assist clergy, to be exempted from this restriction. Another commenter agreed with the exemption for inherently religious activities in the prison context, yet requested that the proposed rule clarify that religious activities conducted by chaplains in detention facilities be voluntary and not coercive.

As noted in the proposed rule, the legal restrictions that apply to religious programs within correctional facilities will sometimes be different from legal restrictions that are applied to other Department programs. That is because correctional institutions are heavily regulated, and this extensive government control over the prison environment means that prison officials must sometimes take affirmative steps, in the form of chaplaincies and similar programs, to provide an opportunity for prisoners to exercise their religion. Without such efforts, religious freedom would not exist for Federal prisoners. See *Cruz* v. *Beto,* 405 U.S. 319, 322 n.2 (1972) (explaining that ''reasonable opportunities must be afforded to all prisoners to exercise the religious freedom guaranteed by the First and Fourteenth Amendment without fear of penalty''); *Abington School District* v. *Schempp,* 374 U.S. 203, 299 (1963) (Brennan, J., concurring) (observing that ''hostility, not neutrality, would characterize the refusal to provide chaplains and places of worship for prisoners * * * cut off by the State from all civilian opportunities for public communion''). Of course, religious activities must be voluntary for the inmates.

Sometimes the activities of chaplains and those assisting them will be inherently religious. For example, a chaplain might conduct a voluntary worship service or administer sacraments. The rule does not effect any change in the professional or legal responsibilities of chaplains or those persons or organizations assisting them. Nor does it diminish the fact that chaplains' duties often include the provision of secular counseling. Rather, the rule is intended simply to make clear that the rule's otherwise-applicable restrictions on the use of direct Department financial assistance for inherently religious activities do not apply to chaplains in correctional facilities or those functioning in similar roles, and the Department sees no reason to make a distinction between clergy and those assisting them. Accordingly, the rule as stated reflects the law and requires no change.

Applicability of Rule to ''Commingled'' Funds

Another commenter noted that the term ''voluntarily contributes'' as used in § 38.1(h) may lead to confusion over the applicability of the section to commingled State and local funds. Section 38.1(h) states that ''[i]f a State or local government voluntarily contributes its own funds to supplement activities carried out under the applicable programs, * * * the provisions of this section shall apply'' to all of the funds that it commingles with Federal funds. The commenter suggested that the paragraph specifically include reference to ''matching funds'' instead of using the term ''voluntarily contributed'' to make it clear that the section shall apply to all funds commingled with Federal funds.

The Department believes that this section of the rule is sufficiently clear. As the rule states, when States and local governments have the option to commingle their funds with Federal funds or to separate State and local funds from Federal funds, Federal rules apply if they choose to commingle their own funds with Federal funds. Some Department programs explicitly require that Federal rules apply to State ''matching'' funds, ''maintenance of effort'' funds, or other grantee contributions that are commingled with Federal funds—*i.e.,* are part of the grant budget. In these circumstances, Federal rules of course remain applicable to both the Federal and State or local funds that implement the program.

Another commenter stated that under the proposed rule, a State or local government has the option to segregate the Federal funds or commingle them. The commenter requested that the Department mandate that State and local funds should be kept separate from any Federal funds. Other commenters claimed, however, that the proposed rule is unclear whether it applies to State funds, or whether States can segregate their funds from Federal funds. The commenters requested that the Department revise the proposed rule to clarify the application of Federal rules to State funds.

The Department disagrees with these comments. As an initial matter, the Department believes it would be inappropriate to require States and local governments to separate their own funds from Federal funds circumstances where there is no matching requirement or other required grantee contribution. Where no matching requirement or other required grantee contribution is applicable, whether to commingle State and Federal funds is a decision for the States and local governments to make. In addition, for the same reasons that language concerning voluntarily commingled funds does not require clarification, the Department believes the rule requires no clarification as to whether it applies to State funds. As explained above, when States and local governments have the option to commingle their funds with Federal funds or to separate State and local funds from Federal funds, Federal rules apply only if they choose to commingle their own funds with Federal funds. Where a Department program explicitly requires that Federal rules apply to State ''matching'' funds, ''maintenance of effort'' funds, or other grantee contributions that are commingled with Federal funds—*i.e.,* are part of the grant budget—Federal rules remain applicable to both the Federal and State or local funds that implement the program.

Faith-Based Organizations and State Action

Two commenters claimed that there is a sufficient nexus between the organizations covered by the proposed regulation and the government, such that the organizations are State actors subject to constitutional requirements.

The Department disagrees with these comments. The receipt of government funds does not convert a non-governmental organization into a State actor subject to constitutional norms. See *Rendell-Baker* v. *Kohn,* 457 U.S. 830 (1982) (holding that the employment decisions of a private school that receives more than 90 percent of its funding from the State are not State action).

Applicability and Notice of Nondiscrimination Requirements

Two commenters suggested that the Department cannot simply refer grantees to appropriate Department program offices to determine the scope of applicable independent statutory provisions requiring all grantees to agree not to discriminate in employment on the basis of religion.

The Department understands that grantees need to be aware of such provisions and believes such information is most easily obtained and best explained by the appropriate Department offices. The purpose of this rulemaking is to eliminate undue administrative barriers that the Department has imposed to the participation of faith-based organizations in Department programs; it is not to alter existing statutory requirements, which apply to Department programs to the same extent that they applied under the prior rule.

State and Local Diversity Requirements and Preemption

Additional comments expressed concern that the proposed rule will exempt religious organizations from State and local diversity requirements. Further, the commenters suggested that the proposed rule be modified to state that State and local laws will not be preempted by the rule.

The requirements that govern funding under the Department programs at issue in these regulations do not address preemption of State or local laws. Federal funds, however, carry Federal requirements. No organization is required to apply for funding under these programs, but organizations that apply and are selected for funding must comply with the requirements applicable to the program funds.

Religious Organizations' Display of Religious Art or Symbols

Several commenters have disagreed with the provisions allowing religious organizations conducting Department-funded programs in their facilities to retain the religious art, icons, scriptures, or other religious symbols found in their facilities.

The Department disagrees with these comments. A number of Federal statutes affirm the principle embodied in this rule. *See, e.g.,* 42 U.S.C. 290kk–1(d)(2)(B). Moreover, for no other program participants do Department regulations prescribe the types of artwork, statues, or icons that may be placed within the structures or rooms in which Department-funded services are provided. In addition, a prohibition on the use of religious icons would make it more difficult for many faith-based organizations to participate in Department programs than other organizations by forcing them to procure additional space. It would thus be an inappropriate and excessive restriction, typical of the types of regulatory barriers that this final rule seeks to eliminate. Consistent with constitutional church-state guidelines, a faith-based organization that participates in Department programs will retain its independence and may continue to carry out its mission, provided that it does not use direct Department funds to support any inherently religious activities. Accordingly, this final rule continues to provide that faith-based organizations may use space in their facilities to provide Department-funded services, without removing religious art, icons, scriptures, or other religious symbols.

Religious Freedom Restoration Act

Another commenter requested that the Department include language in the regulation by way of notice that the Religious Freedom Restoration Act (''RFRA''), 42 U.S.C. 2000bb *et seq.,* may also provide relief from otherwise applicable provisions prohibiting employment discrimination on the basis of religion. The commenter noted that, for example, the Department of Health and Human Services has recognized RFRA's ability to provide relief from certain employment nondiscrimination requirements in the final regulations it promulgated governing its substance abuse and mental health programs.

The Department notes that RFRA, which applies to all Federal law and its implementation, 42 U.S.C. 4000bb–3, 4000bb–2(1), is applicable regardless of whether it is specifically mentioned in these regulations. Whether or not a party is entitled to an exemption or other relief under RFRA simply depends upon whether the party satisfies the requirements of that statute. The Department therefore declines to adopt this recommendation at this time.

Recognition of Religious Organizations' Title VII Exemption

A number of commenters expressed views on the rule's provision that religious organizations do not forfeit their Title VII exemption by receiving Department funds, absent statutory authority to the contrary. Some expressed appreciation that a religious organization will retain its independence in this regard, while others disagreed with the provision retaining the Title VII exemption. Some argued that it is unconstitutional for the government to provide funding for provision of social services to an organization that considers religion in its employment decisions. Others argued that Congress must expressly preserve religious organizations' Title VII exemptions—as it has done in certain welfare reform and substance abuse programs—for such organizations that receive Federal funds to retain those exemptions, and in any event that it is unwise and unfair to secular organizations to preserve such religious exemptions as a matter of executive branch policy. These commenters requested that the proposed rule be amended to provide that discrimination on the basis of religion with respect to an employment position is not allowed if an organization is federally funded.

The Department disagrees with these objections to the rule's recognition that a religious organization does not forfeit its Title VII exemption when administering Department-funded services. As an initial matter, applicable statutory nondiscrimination requirements are not altered by this rule. Congress establishes the conditions under which religious organizations are exempt from Title VII; this rule simply recognizes that these requirements, including their limitations, are fully applicable to federally funded organizations unless Congress says otherwise. As to the suggestion that the Constitution restricts the government from providing funding for social services to religious organizations that consider faith in hiring, that view does not accurately represent the law. As noted above, the employment decisions of organizations that receive extensive public funding are not attributable to the State, see *Rendell-Baker* v. *Kohn,* 457 U.S. 830 (1982), and it has been settled for more than 100 years that the Establishment Clause does not bar the provision of direct Federal grants to organizations that are controlled and operated exclusively by members of a single faith. *See Bradfield* v. *Roberts,* 175 U.S. 291 (1899); *see also Bowen* v. *Kendrick,* 487 U.S. 589, 609 (1988). Finally, the Department notes that allowing religious groups to consider faith in hiring when they receive government funds is much like allowing a federally funded environmental organization to hire those who share its views on protecting the environment—both groups are allowed to consider ideology and mission, which improves their effectiveness and preserves their integrity. Thus, the Department declines to amend the final rule to require religious organizations to forfeit their Title VII rights.

Discrimination on the Basis of Sexual Orientation

One comment objected to the ability of religious organizations to discriminate on the basis of sexual orientation.

Although Federal law prohibits persons from being excluded from participation in Department services or subjected to discrimination based on race, color, national origin, sex, age, or disability, it does not prohibit discrimination on the basis of sexual orientation. We decline to impose additional restrictions by regulation.

Nondiscrimination in Providing Assistance

Commenters have requested that the proposed rule include a provision protecting beneficiaries who object to the religious character of a grantee. The comment suggests language that not only protects beneficiaries ''on the basis of religion and religious belief,'' but also ''on the basis of religion, religious belief, *a refusal to hold a religious belief, or a refusal to actively participate in a religious practice.*'' Comments have also requested that language be added to clarify that if a person objects to being assigned to a religious organization, then the government must provide a secular alternative. Other comments request that remedies and a grievance process be included in the proposed regulation for beneficiaries who do not voluntarily attend religious organization programs or who are not provided an adequate alternative.

The Department declines to adopt these recommendations and believes that the existing language prohibiting faith-based organizations from discriminating against program beneficiaries on the basis of ''religion or religious belief'' is sufficiently explicit to include beneficiaries who hold no religious belief. Such a prohibition is straightforward and requires no further elaboration. In addition, the rule provides that religious organizations may not use direct Federal funding from the Department for inherently religious activities and that any such activities must be offered separately, in time or location, and must be voluntary for program beneficiaries. These requirements further protect the rights of program beneficiaries, for whom traditional channels of airing grievances are generally available.

Assurance Requirements

Some commenters have stated that the proposed rule must include additional assurances to ensure that religious organizations understand that federally funded activities must be carried out in a secular manner. Other commenters have suggested that the rule require unique contracts between the Department and faith-based organization grantees to specify that government funds may not support programs or materials that convey religious messages or otherwise promote religion.

The final rule remains unchanged from the proposed rule on this matter. Each grantee must sign assurances certifying that the grantee will comply with the various laws applicable to recipients of Federal grants, including this final rule and its prohibition on the use of direct financial assistance from the Department for inherently religious activities. Additional assurances, such as those that are being removed by this rule, only perpetuate an unfair presumption that program requirements applicable to all program participants are insufficient to bind faith-based organizations, such that additional requirements and assurances must be imposed on these organizations.

The Department believes that no additional requirements above and beyond those imposed on all participating organizations are needed. In issuing this rule, the Department's general approach is that faith-based organizations are not a category of applicants or program participants that require additional requirements or oversight in order to ensure compliance with program regulations. Rather, the Department believes that faith-based organizations, like other recipients of Department funds, fully understand the restrictions on the funding they receive, including the restriction that inherently religious activities cannot be undertaken with direct Federal funding and must remain separate from federally funded activities. The requirements for use of funds under a Department program apply to, and are binding on, all Department program participants.

A few commenters have also requested that the proposed rule require monthly reports and periodic site visits of faith-based grantees. Commenters have suggested that the rule should require religious organizations to maintain separate accounts for Federal funds to allow for proper oversight.

The Department imposes no comparable requirements in any other context. It would be unfair to require religious organizations alone to comply with these additional burdens. Further, the Department finds no basis for requiring greater oversight and monitoring of faith-based organizations than of other program participants simply because they are faith-based organizations. All program participants must be monitored for compliance with program requirements, and no program participant may use Department funds for any ineligible activity, whether that activity is an inherently religious activity or a nonreligious activity that is outside the scope of the program at issue. Many secular organizations participating in Department programs also receive funding from several sources (private, State, or local) to carry out activities that are ineligible for funding under Department programs. In many cases, the non-eligible activities are secular activities but not activities eligible for funding under Department programs. All program participants receiving funding from various sources and carrying out a wide range of activities must ensure through proper accounting principles that each set of funds is applied only to the activities for which the funding was provided. Applicable policies, guidelines, and regulations prescribe the cost accounting procedures that are to be followed in using Department funds. This system of monitoring is more than sufficient to address the commenters' concerns, and the amount of oversight of religious organizations necessary to accomplish these purposes is no different than that involved in other publicly funded programs that the Supreme Court has upheld.

III. Findings and Certifications

Executive Order 12866—Regulatory Planning and Review

The Office of Management and Budget (OMB) reviewed this final rule under Executive Order 12866, *Regulatory Planning and Review.* OMB determined that the rule is a ''significant regulatory action'' as defined in section 3(f) of the Order (although not an economically significant regulatory action under the Order) and, accordingly, reviewed the rule. Any changes made to the rule as a result of that review are identified in the docket file, which is available for public inspection in the office of the Task Force for Faith-based and Community Initiatives, Room 4409, 950 Pennsylvania Ave., NW., Washington, DC 20530.

Unfunded Mandates Reform Act

Title II of the Unfunded Mandates Reform Act of 1995 (2 U.S.C. 1531–1538) establishes requirements for Federal agencies to assess the effects of their regulatory actions on State, local, and tribal governments, and on the private sector. This final rule does not impose any Federal mandates on any State, local, or tribal governments, or the

private sector, within the meaning of the Unfunded Mandates Reform Act of 1995.

Executive Order 13132—Federalism

Executive Order 13132, *Federalism*, prohibits an agency from publishing any rule that has federalism implications if the rule either imposes substantial direct compliance costs on State and local governments and is not required by statute, or the rule preempts State law, unless the agency meets the consultation and funding requirements of section 6 of the Executive Order. Consistent with Executive Order 13132, the Department specifically solicited comments from State and local government officials on this proposed rule, and no comments from these entities were submitted that raised federalism concerns.

Environmental Impact

A Finding of No Significant Impact with respect to the environment has been made for this rule in accordance with Department regulations at 28 CFR part 61, which implement section 102(2)(C) of the National Environmental Policy Act of 1969 (42 U.S.C. 4332). The Finding of No Significant Impact is available for public inspection between the hours of 8:30 a.m. and 5:30 p.m. weekdays in the Task Force for Faith-based and Community Initiatives, Office of the Deputy Attorney General, Room 4413, Department of Justice, 950 Pennsylvania Ave., NW., Washington, DC 20530.

Regulatory Flexibility Act

The Attorney General, in accordance with the Regulatory Flexibility Act (5 U.S.C. 605(b)), has reviewed and approved this final rule and in so doing certifies that the rule will not have a significant economic impact on a substantial number of small entities. The final rule will not impose any new costs, or modify existing costs, applicable to Department grantees. Rather, the purpose of the rule is to remove policy prohibitions that currently restrict the equal participation of religious or religiously affiliated organizations (large and small) in the Department's programs. Notwithstanding the Department's determination that this rule will not have a significant economic effect on a substantial number of small entities, the Department specifically invited comments regarding any less burdensome alternatives to this rule that would meet the Department's objectives as described in this preamble.

Catalog of Federal Domestic Assistance Numbers

The Catalog of Federal Domestic Assistance program numbers for the programs affected by this rule are 16.579, 16.592, 16.593, 16.523, 16.540, 16.548, 16.549, 16.575, 16.588, 16.580, 16.613, 16.202, 16.585, 16.595, 16.560, 16.563, 16.541, 16.542, 16.728, 16.729, 16.730, 16.731, 16.732, 16.543, 16.544, 16.547, 16.726, 16.547, 16.582, 16.583, 16.524, 16.525, 16.587, 16.589, 16.602, 16.005, 16.108, 16.320, 16.526, 16.710, 16.110.

List of Subjects

28 CFR Part 31

Grant programs—law, Juvenile delinquency, Reporting and recordkeeping requirements.

28 CFR Part 33

Administrative practice and procedure, Grants.

28 CFR Part 38

Administrative practice and procedure, Grant programs, Reporting and recordkeeping requirements, Nonprofit organizations.

28 CFR Part 90

Grant programs, Judicial administration—violence against women.

28 CFR Part 91

Grant Programs—correctional facilities.

28 CFR Part 93

Grant programs, Judicial administration.

■ For the reasons stated in the preamble, the Department amends chapter I of Title 28 of the Code of Federal Regulations as follows:

PART 31—OJJDP GRANT PROGRAMS

■ 1. The authority citation for part 31 is revised to read as follows:

Authority: 42 U.S.C 5601 through 5785; Pub. L. 108–7, 117 Stat. 11; 5 U.S.C. 301.

■ 2. Add § 31.404 to subpart A to read as follows:

§ 31.404 Participation by faith-based organizations.

The funds provided under this part shall be administered in compliance with the standards set forth in part 38 (Equal Treatment for Faith-based Organizations) of this chapter.

■ 3. In § 31.502, add paragraph (a)(3) to read as follows:

§ 31.502 Assurances and plan information.

(a) * * *

(3) The funds provided under this part shall be administered in compliance with the standards set forth in part 38 (Equal Treatment for Faith-based Organizations) of this chapter.

* * * * *

PART 33—BUREAU OF JUSTICE ASSISTANCE GRANT PROGRAMS

■ 4. The authority section for part 33 is revised to read as follows:

Authority: 42 U.S.C. 3701 through 3797y–4; 5 U.S.C. 301.

■ 5. In subpart A under the heading Additional Requirements, add § 33.53 to read as follows:

§ 33.53 Participation by faith-based organizations.

The funds provided under this part shall be administered in compliance with the standards set forth in part 38 (Equal Treatment for Faith-based Organizations) of this chapter.

■ 6. Add part 38 to read as follows:

PART 38—EQUAL TREATMENT FOR FAITH-BASED ORGANIZATIONS

Sec.
38.1 Discretionary grants, contracts, and cooperative agreements.
38.2 Formula grants.

Authority: 28 U.S.C. 509; 5 U.S.C. 301; E.O. 13279, 67 FR 77141, 3 CFR, 2002 Comp., p. 258; 18 U.S.C. 4001, 4042, 5040; 20 U.S.C. 1152; 21 U.S.C. 871; 25 U.S.C. 3681; Pub. L. 107–273, 116 Stat. 1758 (42 U.S.C. 3751, 3753, 3762b, 3782, 3796dd–1, 3796dd–7, 3796gg–1, 3796gg–0b, 3796gg–3, 3796h, 3796ii–2, 3797u–3, 3797w, 5611, 5672, 10604, 14071).

§ 38.1 Discretionary grants, contracts, and cooperative agreements.

(a) Religious organizations are eligible, on the same basis as any other organization, to participate in any Department program for which they are otherwise eligible. Neither the Department nor any State or local government receiving funds under any Department program shall, in the selection of service providers, discriminate for or against an organization on the basis of the organization's religious character or affiliation. As used in this section, ''program'' refers to a grant, contract, or cooperative agreement funded by a discretionary grant from the Department. As used in this section, the term ''grantee'' includes a recipient of a grant, a signatory to a cooperative agreement, or a contracting party.

(b) (1) Organizations that receive direct financial assistance from the

Department under any Department program may not engage in inherently religious activities, such as worship, religious instruction, or proselytization, as part of the programs or services funded with direct financial assistance from the Department. If an organization conducts such activities, the activities must be offered separately, in time or location, from the programs or services funded with direct financial assistance from the Department, and participation must be voluntary for beneficiaries of the programs or services funded with such assistance.

(2) The restrictions on inherently religious activities set forth in paragraph (b)(1) of this section do not apply to programs where Department funds are provided to chaplains to work with inmates in prisons, detention facilities, or community correction centers, or where Department funds are provided to religious or other organizations for programs in prisons, detention facilities, or community correction centers, in which such organizations assist chaplains in carrying out their duties.

(c) A religious organization that participates in the Department-funded programs or services will retain its independence from Federal, State, and local governments, and may continue to carry out its mission, including the definition, practice, and expression of its religious beliefs, provided that it does not use direct financial assistance from the Department to support any inherently religious activities, such as worship, religious instruction, or proselytization. Among other things, a faith-based organization that receives financial assistance from the Department may use space in its facilities, without removing religious art, icons, scriptures, or other religious symbols. In addition, a religious organization that receives financial assistance from the Department retains its authority over its internal governance, and it may retain religious terms in its organization's name, select its board members on a religious basis, and include religious references in its organization's mission statements and other governing documents.

(d) An organization that participates in programs funded by direct financial assistance from the Department shall not, in providing services, discriminate against a program beneficiary or prospective program beneficiary on the basis of religion or religious belief.

(e) No grant document, agreement, covenant, memorandum of understanding, policy, or regulation that is used by the Department or a State or local government in administering financial assistance from the Department shall require only religious organizations to provide assurances that they will not use monies or property for inherently religious activities. Any such restrictions shall apply equally to religious and non-religious organizations. All organizations that participate in Department programs, including religious ones, must carry out eligible activities in accordance with all program requirements and other applicable requirements governing the conduct of Department-funded activities, including those prohibiting the use of direct financial assistance from the Department to engage in inherently religious activities. No grant document, agreement, covenant, memorandum of understanding, policy, or regulation that is used by the Department or a State or local government in administering financial assistance from the Department shall disqualify religious organizations from participating in the Department's programs because such organizations are motivated or influenced by religious faith to provide social services, or because of their religious character or affiliation.

(f) *Exemption from Title VII employment discrimination requirements.* A religious organization's exemption from the Federal prohibition on employment discrimination on the basis of religion, set forth in section 702(a) of the Civil Rights Act of 1964, 42 U.S.C. 2000e–1, is not forfeited when the organization receives direct or indirect financial assistance from the Department. Some Department programs, however, contain independent statutory provisions requiring that all grantees agree not to discriminate in employment on the basis of religion. Accordingly, grantees should consult with the appropriate Department program office to determine the scope of any applicable requirements.

(g) In general, the Department does not require that a grantee, including a religious organization, obtain tax-exempt status under section 501(c)(3) of the Internal Revenue Code to be eligible for funding under Department programs. Many grant programs, however, do require an organization to be a ''nonprofit organization'' in order to be eligible for funding. Individual solicitations that require organizations to have nonprofit status will specifically so indicate in the eligibility section of a solicitation. In addition, any solicitation that requires an organization to maintain tax-exempt status will expressly state the statutory authority for requiring such status. Grantees should consult with the appropriate Department program office to determine the scope of any applicable requirements. In Department programs in which an applicant must show that it is a nonprofit organization, the applicant may do so by any of the following means:

(1) Proof that the Internal Revenue Service currently recognizes the applicant as an organization to which contributions are tax deductible under section 501(c)(3) of the Internal Revenue Code;

(2) A statement from a State taxing body or the State secretary of state certifying that:

(i) The organization is a nonprofit organization operating within the State; and

(ii) No part of its net earnings may lawfully benefit any private shareholder or individual;

(3) A certified copy of the applicant's certificate of incorporation or similar document that clearly establishes the nonprofit status of the applicant; or

(4) Any item described in paragraphs (b)(1) through (3) of this section if that item applies to a State or national parent organization, together with a statement by the State or parent organization that the applicant is a local nonprofit affiliate.

(h) *Effect on State and local funds.* If a State or local government voluntarily contributes its own funds to supplement activities carried out under the applicable programs, the State or local government has the option to separate out the Federal funds or commingle them. If the funds are commingled, the provisions of this section shall apply to all of the commingled funds in the same manner, and to the same extent, as the provisions apply to the Federal funds.

(i) To the extent otherwise permitted by Federal law, the restrictions on inherently religious activities set forth in this section do not apply where Department funds are provided to religious organizations as a result of a genuine and independent private choice of a beneficiary, provided the religious organizations otherwise satisfy the requirements of the program. A religious organization may receive such funds as the result of a beneficiary's genuine and independent choice if, for example, a beneficiary redeems a voucher, coupon, or certificate, allowing the beneficiary to direct where funds are to be paid, or a similar funding mechanism provided to that beneficiary and designed to give that beneficiary a choice among providers.

§ 38.2 Formula grants.

(a) Religious organizations are eligible, on the same basis as any other

organization, to participate in any Department program for which they are otherwise eligible. Neither the Department nor any State or local government receiving funds under any Department program shall, in the selection of service providers, discriminate for or against an organization on the basis of the organization's religious character or affiliation. As used in this section, ''program'' refers to a grant, contract, or cooperative agreement funded by a formula or block grant from the Department. As used in this section, the term ''grantee'' includes a recipient of a grant, a signatory to a cooperative agreement, or a contracting party.

(b) (1) Organizations that receive direct financial assistance from the Department may not engage in inherently religious activities, such as worship, religious instruction, or proselytization, as part of the programs or services funded with direct financial assistance from the Department. If an organization conducts such activities, the activities must be offered separately, in time or location, from the programs or services funded with direct financial assistance from the Department, and participation must be voluntary for beneficiaries of the programs or services funded with such assistance.

(2) The restrictions on inherently religious activities set forth in paragraph (b)(1) of this section do not apply to programs where Department funds are provided to chaplains to work with inmates in prisons, detention facilities, or community correction centers, or where Department funds are provided to religious or other organizations for programs in prisons, detention facilities, or community correction centers, in which such organizations assist chaplains in carrying out their duties.

(c) A religious organization that participates in the Department-funded programs or services will retain its independence from Federal, State, and local governments, and may continue to carry out its mission, including the definition, practice, and expression of its religious beliefs, provided that it does not use direct financial assistance from the Department to support any inherently religious activities, such as worship, religious instruction, or proselytization. Among other things, a faith-based organization that receives financial assistance from the Department may use space in its facilities, without removing religious art, icons, scriptures, or other religious symbols. In addition, a religious organization that receives financial assistance from the Department retains its authority over its internal governance, and it may retain religious terms in its organization's name, select its board members on a religious basis, and include religious references in its organization's mission statements and other governing documents.

(d) An organization that participates in programs funded by direct financial assistance from the Department shall not, in providing services, discriminate against a program beneficiary or prospective program beneficiary on the basis of religion or religious belief.

(e) No grant document, agreement, covenant, memorandum of understanding, policy, or regulation that is used by the Department or a State or local government in administering financial assistance from the Department shall require only religious organizations to provide assurances that they will not use monies or property for inherently religious activities. Any such restrictions shall apply equally to religious and non-religious organizations. All organizations that participate in Department programs, including religious ones, must carry out eligible activities in accordance with all program requirements and other applicable requirements governing the conduct of Department-funded activities, including those prohibiting the use of direct financial assistance to engage in inherently religious activities. No grant document, agreement, covenant, memorandum of understanding, policy, or regulation that is used by the Department or a State or local government in administering financial assistance from the Department shall disqualify religious organizations from participating in the Department's programs because such organizations are motivated or influenced by religious faith to provide social services, or because of their religious character or affiliation.

(f) *Exemption from Title VII employment discrimination requirements.* A religious organization's exemption from the Federal prohibition on employment discrimination on the basis of religion, set forth in section 702(a) of the Civil Rights Act of 1964, 42 U.S.C. 2000e–1, is not forfeited when the religious organization receives direct or indirect financial assistance from Department. Some Department programs, however, contain independent statutory provisions requiring that all grantees agree not to discriminate in employment on the basis of religion. Accordingly, grantees should consult with the appropriate Department program office to determine the scope of any applicable requirements.

(g) In general, the Department does not require that a grantee, including a religious organization, obtain tax-exempt status under section 501(c)(3) of the Internal Revenue Code to be eligible for funding under Department programs. Many grant programs, however, do require an organization to be a ''nonprofit organization'' in order to be eligible for funding. Individual solicitations that require organizations to have nonprofit status will specifically so indicate in the eligibility section of a solicitation. In addition, any solicitation that requires an organization to maintain tax-exempt status will expressly state the statutory authority for requiring such status. Grantees should consult with the appropriate Department program office to determine the scope of any applicable requirements. In Department programs in which an applicant must show that it is a nonprofit organization, the applicant may do so by any of the following means:

(1) Proof that the Internal Revenue Service currently recognizes the applicant as an organization to which contributions are tax deductible under section 501(c)(3) of the Internal Revenue Code;

(2) A statement from a State taxing body or the State secretary of state certifying that:

(i) The organization is a nonprofit organization operating within the State; and

(ii) No part of its net earnings may lawfully benefit any private shareholder or individual;

(3) A certified copy of the applicant's certificate of incorporation or similar document that clearly establishes the nonprofit status of the applicant; or

(4) Any item described in paragraphs (b)(1) through (3) of this section if that item applies to a State or national parent organization, together with a statement by the State or parent organization that the applicant is a local nonprofit affiliate.

(h) *Effect on State and local funds.* If a State or local government voluntarily contributes its own funds to supplement activities carried out under the applicable programs, the State or local government has the option to separate out the Federal funds or commingle them. If the funds are commingled, the provisions of this section shall apply to all of the commingled funds in the same manner, and to the same extent, as the provisions apply to the Federal funds.

(i) To the extent otherwise permitted by Federal law, the restrictions on inherently religious activities set forth in this section do not apply where Department funds are provided to

religious organizations as a result of a genuine and independent private choice of a beneficiary, provided the religious organizations otherwise satisfy the requirements of the program. A religious organization may receive such funds as the result of a beneficiary's genuine and independent choice if, for example, a beneficiary redeems a voucher, coupon, or certificate, allowing the beneficiary to direct where funds are to be paid, or a similar funding mechanism provided to that beneficiary and designed to give that beneficiary a choice among providers.

PART 90—VIOLENCE AGAINST WOMEN

■ 7. The authority citation for part 90 is revised to read as follows:

Authority: 42 U.S.C. 3711–3796gg–7; Sec. 826, Part E, Title VIII, Pub. L. 105–244, 112 Stat. 1581, 1815.

■ 8. Add § 90.3 to subpart A to read as follows:

§ 90.3 Participation by faith-based organizations.

The funds provided under this part shall be administered in compliance with the standards set forth in part 38 (Equal Treatment for Faith-based Organizations) of this chapter.

PART 91—GRANTS FOR CORRECTIONAL FACILITIES

■ 9. The authority citation for part 91 is revised to read as follows:

Authority: 42 U.S.C. 13701 through 14223.

■ 10. In § 91.3, add paragraph (g) to read as follows:

§ 91.3 General eligibility requirements.

* * * * *

(g) The funds provided under this part shall be administered in compliance with the standards set forth in part 38 (Equal Treatment for Faith-based Organizations) of this chapter.

■ 11. In § 91.23, add paragraph (d) to read as follows:

§ 91.23 Grant authority.

* * * * *

(d) The funds provided under this part shall be administered in compliance with the standards set forth in part 38 (Equal Treatment for Faith-based Organizations) of this chapter.

PART 93—PROVISIONS IMPLEMENTING THE VIOLENT CRIME CONTROL AND LAW ENFORCEMENT ACT OF 1994

■ 12. The authority citation for part 93 is added to read as follows:

Authority: 42 U.S.C. 3797u through 3797y–4.

■ 13. In § 93.4, add paragraph (c) to read as follows:

§ 93.4 Grant authority.

* * * * *

(c) The funds provided under this part shall be administered in compliance with the standards set forth in part 38 (Equal Treatment for Faith-based Organizations) of this chapter.

Dated: January 14, 2004.

John Ashcroft,

Attorney General.

[FR Doc. 04–1165 Filed 1–20–04; 8:45 am]

BILLING CODE 4410–18–P

DEPARTMENT OF HOMELAND SECURITY

Coast Guard

33 CFR Part 165

[CGD11–03–001]

RIN 1625–AA11

Regulated Navigation Areas, San Francisco Bay, CA

AGENCY: Coast Guard, DHS.

ACTION: Final rule.

SUMMARY: The Coast Guard is revising the regulated navigation areas (RNA) at: the Benicia-Martinez Railroad Drawbridge (BMRD) at the entrance to Suisun Bay; the Pinole Shoal Channel RNA; the southern boundary of the Southampton Shoal/Richmond Harbor RNA; and the portion of the Oakland Harbor RNA that lies just due north of Anchorage 8. The revisions will: clarify and expand the boundaries of the BMRD RNA; restrict vessels less than 1600 gross tons from entering the Pinole Shoal Channel RNA; expand the boundary for the Southampton Shoal/Richmond Harbor RNA; and designate new boundary lines for the Oakland Harbor RNA to coincide with the new Anchorage 8 boundaries. These revisions will clarify the procedures for vessels intending to transit which are either moored or in transit bound for the BMRD; allow towing vessels with tow of 1600 or more gross tons to utilize the Pinole Shoal Channel; further reduce the risk of groundings and collisions by expanding the RNA in the Southampton Shoal to encompass the federally maintained waterway; and correct the coordinates for the northern boundary of the Oakland Harbor RNA that is inaccurately listed in the current RNA regulation.

DATES: This final rule is effective February 20, 2004.

ADDRESSES: Comments and material received from the public, as well as documents indicated in this preamble as being available in the docket, are part of docket CGD11 03–001 and are available for inspection or copying at District Eleven Marine Safety Division, Waterways Management Section, Coast Guard Island, Building 51–1, Alameda, CA, 94501–5100, between 8 a.m. and 4 p.m., Monday through Friday, except Federal holidays.

FOR FURTHER INFORMATION CONTACT: LTJG Michael Boyes, District Eleven Marine Safety Division, Waterways Management Section, at (510) 437–5954.

SUPPLEMENTARY INFORMATION:

Regulatory Information

On September 18, 2003, we published a notice of proposed rulemaking (NPRM) entitled Regulated Navigation Areas (RNAs), San Francisco Bay, CA in the **Federal Register** (68 FR 181). We received no letters commenting on the proposed rule. No public hearing was requested, and none was held.

Background and Purpose

Benicia-Martinez Railroad Drawbridge RNA: The purpose is to revise the regulated navigation area (RNA) at the Benicia-Martinez Railroad Drawbridge at the entrance to Suisun Bay. The revision will refer to the bridge that is the focus of the RNA in terms of geographic locality and remove any reference to corporate naming methods. The revision will convert the distance measurement from 1000 yards to ½ nautical mile. The revision will clarify and expand the boundaries of the RNA and clarify the procedures for vessels intending to transit through the Benicia-Martinez Railroad Drawbridge that are either moored or anchored within the boundaries of the revised RNA.

Pinole Shoal Channel RNA: Revision of this regulation will update the current Pinole Shoal Channel RNA that currently restricts vessels drawing a draft less than 20 feet from operating within the channel. Instead of the draft requirement, the new regulations will restrict vessels less than 1600 gross tons from entering the Pinole Shoal Channel RNA. This change will allow vessels of 1600 gross tons or a tug with a tow of 1600 gross tons that may not necessarily draw 20 feet of draft to utilize the marked channel. The RNA will continue to benefit vessels based on their maneuverability and keep smaller vessels out of the channel.

Southampton/Richmond Harbor RNA: Based on the results of a

Waterways Analysis and Management Study of the Southampton Shoal Channel in April 2000, the Coast Guard relocated Southampton Shoal Channel Lighted Buoys 1, 2, 3, 4, 5, 6 and 7 to properly mark the federally maintained waterway. This extended the marked channel beyond the southern limits of the RNA. This rule extends the RNA so that it encompasses the federally maintained waterway. This RNA will increase navigational safety by organizing traffic flow patterns; reducing meeting, crossing, and overtaking situations between large vessels in constricted channels; and limiting vessel speed.

Oakland Harbor RNA: This final rule will incorporate an administrative change to revise the boundary line of the affected Oakland Harbor RNA to coincide with the new boundaries of Anchorage 8. While Anchorage 8 increased in size by approximately 2,300 square feet to the northwest, the Oakland Harbor RNA lying just north of this anchorage decreased in size by the same amount. This final rule will correct the misprinted coordinates in the current RNA regulation for the northern boundary of the Oakland Harbor RNA. The corrected coordinates will reflect what NOAA has already charted. The regulations that apply to vessels within this RNA will still remain the same.

Regulatory Evaluation

This rule is not a ''significant regulatory action'' under section 3(f) of Executive Order 12866, Regulatory Planning and Review, and do not require an assessment of potential costs and benefits under section 6 (a)(3) of that Order. The Office of Management and Budget has not reviewed it under that Order. It is not ''significant'' under the regulatory policies and procedures of the Department of Homeland Security (DHS).

The rule change for the Benicia-Martinez Railroad Drawbridge is primarily a naming reference change and boundary modifications. The minimum visibility requirements and clarification of vessel procedures for vessels transiting the area are intended to be implemented in conjunction with already accepted standards for vessel reporting as utilized by local pilot associations and bridge operators. This rule for visibility and reporting is designed to have minimal regulatory impact on how deep draft vessels transit the Benicia-Martinez Railroad Bridge region during periods of reduced visibility. The change to the Pinole Shoal Channel will keep smaller vessels out of the Pinole Shoal Channel but there is currently enough deep water just south of the channel for vessels of 15 to 19 feet draft to transit safely south of the channel. The changes to the Southampton Shoal/Richmond Harbor and Oakland RNAs coincide to chart changes and waterway practices that are already in effect.

Small Entities

Under the Regulatory Flexibility Act (5 U.S.C. 601–612), we have considered whether this rule will have a significant economic impact on a substantial number of small entities. The term ''small entities'' comprises small businesses, not-for-profit organizations that are independently owned and operated and are not dominant in their fields, and governmental jurisdictions with populations of less than 50,000.

The Coast Guard certifies under 5 U.S.C. 605(b) that this rule will not have a significant economic impact on a substantial number of small entities.

Collection of Information

This rule calls for no new collection of information under the Paperwork Reduction Act of 1995 (44 U.S.C. 3501–3520).

Federalism

A rule has implications for federalism under Executive Order 13132, Federalism, if it has a substantial direct effect on State or local governments and would either preempt State law or impose a substantial direct cost of compliance on them. We have analyzed this rule under that Order and have determined that it does not have implications for federalism.

Unfunded Mandates Reform Act

The Unfunded Mandates Reform Act of 1995 (2 U.S.C. 1531–1538) requires Federal agencies to assess the effects of their discretionary regulatory actions. In particular, the Act addresses actions that may result in the expenditure by a State, local, or tribal government, in the aggregate, or by the private sector of $100,000,000 or more in any one year. Though this rule will not result in such expenditures, we do discuss the effects of this rule elsewhere in this preamble.

Taking of Private Property

This rule will not affect a taking of private property or otherwise have taking implications under Executive Order 12630, Governmental Actions and Interference with Constitutionally Protected Property Rights.

Civil Justice Reform

This rule meets applicable standards in sections 3(a) and 3(b)(2) of Executive Order 12988, Civil Justice Reform, to minimize litigation, eliminate ambiguity, and reduce burden.

Protection of Children

We have analyzed this rule under Executive Order 13045, Protection of Children from Environmental Health Risks and Safety Risks. This rule is not an economically significant rule and will not create an environmental risk to health or risk to safety that might disproportionately affect children.

Indian Tribal Governments

This rule does not have tribal implications under Executive Order 13175, Consultation and Coordination with Indian Tribal Governments, because it will not have a substantial direct effect on one or more Indian tribes, on the relationship between the Federal government and Indian tribes, or on the distribution of power and responsibilities between the Federal government and Indian tribes.

Energy Effects

We have analyzed this rule under Executive Order 13211, Actions Concerning Regulations That Significantly Affect Energy Supply, Distribution, or Use. We have determined that it is not a ''significant energy action'' under that order because it is not a ''significant regulatory action'' under Executive Order 12866 and is not likely to have a significant adverse effect on the supply, distribution, or use of energy. The Administrator of the Office of Information and Regulatory Affairs has not designated it as a significant energy action. Therefore, it does not require a Statement of Energy Effects under Executive Order 13211.

Environment

We have analyzed this rule under Commandant Instruction M16475.lD, which guides the Coast Guard in complying with the National Environmental Policy Act of 1969 (NEPA) (42 U.S.C. 4321–4370f), and have concluded that there are no factors in this case that would limit the use of a categorical exclusion under section 2.B.2 of the Instruction. Therefore, this rule is categorically excluded, under figure 2–1, paragraph (34)(g), of the Instruction, from further environmental documentation because we are changing a regulated navigation area.

An ''Environmental Analysis Check List'' and a ''Categorical Exclusion Determination'' are available in the docket where indicated under **ADDRESSES**.

List of Subjects in 33 CFR Part 165

Harbors, Marine safety, Navigation (water), Reporting and recordkeeping requirements, Waterways.

■ For the reasons discussed in the preamble, the Coast Guard amends 33 CFR part 165 as follows:

PART 165—REGULATED NAVIGATION AREAS AND LIMITED ACCESS AREAS

■ 1. The authority citation for part 165 continues to read as follows:

Authority: 33 U.S.C. 1226, 1231; 46 U.S.C Chapter 701; 50 U.S.C. 191, 195; 33 CFR 1.05–1(g), 6.04–1, 6.04–6, 160.5; Pub. L. 107–295, 116 Stat. 2064; Department of Homeland Security Delegation No. 0170.1.

■ 2. Amend § 165.1181 by revising paragraphs(c)(1)(ii)(C)(3), (c)(5), (c)(6)(ii), (c)(7), (e)(1)(ii)(E), (e)(2)(i) and (ii) and (e)(3) to read as follows:

§ 165.1181 San Francisco Bay Region, California—regulated navigation area.

* * * * *

(c) * * *

(1) * * *

(ii) * * *

(C) * * *

(3) Deep Water (two-way) Traffic Lane: Bounded by the Central Bay precautionary area and the Golden Gate precautionary area, between the Deep Water Traffic Lane separation zone and a line connecting the following coordinates, beginning at:

* * * * *

(5) *Benicia-Martinez Railroad Drawbridge Regulated Navigation Area (RNA)*: The following is a regulated navigation area—The waters bounded by the following longitude lines:

(i) 122°13′31″ W (coinciding with the charted location of the Carquinez Bridge)

(ii) 121°53′17″ W (coinciding with the charted location of New York Point)

Datum: NAD 83

(6) * * *

(ii) The waters bounded by a line connecting the following coordinates, beginning at:

37°54′28″ N, 122°23′36″ W; thence to
37°54′20″ N, 122°23′38″ W; thence to
37°54′23″ N, 122°24′02″ W; thence to
37°54′57″ N, 122°24′51″ W; thence to
37°55′05″ N, 122°25′02″ W; thence to
37°54′57″ N, 122°25′22″ W; thence to
37°53′26″ N, 122°25′03″ W; thence to
37°53′24″ N, 122°25′13″ W; thence to
37°55′30″ N, 122°25′35″ W; thence to
37°55′40″ N, 122°25′10″ W; thence to
37°54′54″ N, 122°24′30″ W; thence to
37°54′30″ N, 122°24′00″ W; thence returning to the point of beginning.

Datum: NAD 83

(7) *Oakland Harbor RNA*: The following is a regulated navigation area—The waters bounded by a line connecting the following coordinates, beginning at:

37°48′40″ N, 122°19′58″ W; thence to
37°48′50″ N, 122°20′02″ W; thence to
37°48′29″ N, 122°20′39″ W; thence to
37°48′13″ N, 122°21′26″ W; thence to
37°48′10″ N, 122°21′39″ W; thence to
37°48′20″ N, 122°22′12″ W; thence to
37°47′36″ N, 122°21′50″ W; thence to
37°47′52″ N, 122°21′40″ W; thence to
37°48′03″ N, 122°21′00″ W; thence to
37°47′48″ N, 122°19′46″ W; thence to
37°47′55″ N, 122°19′43″ W; thence returning along the shoreline to the point of the beginning.

Datum: NAD 83

* * * * *

(e) * * *

(1) * * *

(ii) * * *

(E) So far as practicable keep clear of the Central Bay Separation Zone and the Deep Water Traffic Lane Separation Zone;

* * * * *

(2) * * *

(i) A vessel less than 1600 gross tons or a tug with a tow of less than 1600 gross tons is not permitted within this RNA.

(ii) A power-driven vessel of 1600 or more gross tons or a tug with a tow of 1600 or more gross tons shall not enter Pinole Shoal Channel RNA when another power-driven vessel of 1600 or more gross tons or tug with a tow of 1600 or more gross tons is navigating therein if such entry would result in meeting, crossing, or overtaking the other vessel, when either vessel is:

(A) Carrying certain dangerous cargoes (as denoted in § 160.203 of this subchapter);

(B) Carrying bulk petroleum products; or

(C) A tank vessel in ballast.

* * * * *

(3) *Benicia-Martinez Railroad Drawbridge Regulated Navigation Area (RNA)*:

(i) Eastbound vessels:

(A) The master, pilot, or person directing the movement of a power-driven vessel of 1600 or more gross tons or a tug with a tow of 1600 or more gross tons traveling eastbound and intending to transit under the lift span (centered at coordinates 38°02′18″ N, 122°07′17″ W) of the railroad bridge across Carquinez Strait at mile 7.0 shall, immediately after entering the RNA, determine whether the visibility around the lift span is ½ nautical mile or greater.

(B) If the visibility is less than ½ nautical mile, or subsequently becomes less than ½ nautical mile, the vessel shall not transit under the lift span.

(ii) Westbound vessels:

(A) The master, pilot, or person directing the movement of a power-driven vessel of 1600 or more gross tons or a tug with a tow of 1600 or more gross tons traveling westbound and intending to transit under the lift span (centered at coordinates 38°02′18″ N, 122°07′17″ W) of the railroad bridge across Carquinez Strait at mile 7.0 shall, immediately after entering the RNA determine whether the visibility around the lift span is ½ nautical mile or greater.

(B) If the visibility is less than ½ nautical mile, the vessel shall not pass beyond longitude line 121°55′19″ W (coinciding with the charted position of the westernmost end of Mallard Island) until the visibility improves to greater than ½ nautical mile around the lift span.

(C) If after entering the RNA visibility around the lift span subsequently becomes less than ½ nautical mile, the master, pilot, or person directing the movement of the vessel either shall not transit under the lift span or shall request a deviation from the requirements of the RNA as prescribed in paragraph (b) of this section.

(D) Vessels that are moored or anchored within the RNA with the intent to transit under the lift span shall remain moored or anchored until visibility around the lift span becomes greater than ½ nautical mile.

Dated: December 17, 2003.

Kevin J. Eldridge,

Rear Admiral, U.S. Coast Guard, Commander, Eleventh Coast Guard District.

[FR Doc. 04–1266 Filed 1–20–04; 8:45 am]

BILLING CODE 4910–15–P

DEPARTMENT OF HEALTH AND HUMAN SERVICES

Office of the Secretary

45 CFR Part 13

Implementation of the Equal Access to Justice Act in Agency Proceedings

AGENCY: Office of the Secretary, HHS.

ACTION: Final rule.

SUMMARY: This final rule amends the Department's regulations under the Equal Access to Justice Act (EAJA), 5 U.S.C. 504, to conform with statutory amendments to the EAJA and reflect the separation of the Social Security Administration from HHS.

EFFECTIVE DATE: This final rule will be effective on February 20, 2004.

FOR FURTHER INFORMATION CONTACT: Katherine M. Drews, Associate General Counsel, 330 Independence Ave., SW., Cohen Building, Room 4760, Washington, DC 20201. Telephone: (202) 619–0150.

SUPPLEMENTARY INFORMATION:

Background

The Department published a Notice of Proposed Rulemaking on August 13, 2002 at 67 FR 52696, to amend its existing regulation implementing the EAJA. The Department solicited comments on the proposed rule, but did not receive any. Accordingly, the Department publishes the proposed rule as a final rule without changes.

The EAJA, enacted in 1980, requires the Government to pay attorney fees to parties prevailing against it in litigation where the Government's position is not substantially justified. The Act applies to certain types of adversary administrative proceedings and to certain court litigation where attorney fees are not otherwise available.

The EAJA requires each agency to issue rules implementing the Act as it applies to administrative proceedings. The current rule of the Department of Health and Human Services (HHS) was published on October 4, 1983, and is codified at 45 CFR part 13. (All citations below to section 13 are to sections of 45 CFR part 13.)

The original Act had a sunset provision, causing it to expire on September 30, 1984 (although it would continue to cover proceedings pending on that date). The HHS regulation presently in effect contains a similar sunset provision. A subsequent statutory change eliminated the sunset provision in the Act, revised the eligibility criteria for parties, and amended the Act in certain other respects. Pub. L. 99–80, 99 Stat. 183 (1985).

Since publication of the current regulation, the Social Security Administration has become an independent agency. Also, the EAJA was further amended by section 231 of the Contract with America Advancement Act of 1996, Pub. L. 104–121, 110 Stat. 847, 862–63 (1996).

This final rule amends the existing regulation in the following ways:

1. The Act provided for fee shifting only where the agency's position was not substantially justified. Pub. L. 104–121 added a provision for fee shifting where the agency's demand was substantially in excess of the ultimate decision and was unreasonable when compared with that decision. The final regulation amends section 13.1, and revises sections 13.5 and 13.10(a)(2), to incorporate this new basis for fee awards. Pub. L. 104–121 also added a new category of party that would be eligible for a fee award, though only for awards made based on this excessive and unreasonable demand criterion. The final rule amends sections 13.4; 13.10(a)(3), (5); and 13.11(a) to the same effect.

2. The Act included a sunset clause, section 203(c), providing that the Act would not apply to administrative adjudications initiated after September 30, 1984. HHS's existing regulation includes a similar provision, 45 CFR 13.2. Section 6(b)(1) of Pub. L. 99–80 repealed the sunset provision in the Act. The final rule similarly amends section 13.2.

3. Section 13.3 in the existing regulation generally provides that we have listed the covered proceedings in the Appendix to the rule. The final rule revises section 13.3 to cover proceedings not listed in the Appendix to the rule. The new rule automatically covers proceedings where the procedural rights are incorporated by reference from certain statutes that we have already determined invoke the Act. It also allows a party in any other administrative proceeding to file an EAJA application and claim coverage, and have the issue resolved in the resulting proceeding on the fee application.

4. Section 1(c)(1) of Pub. L. 99–80 increased the net worth limitations on parties eligible to recover fees under EAJA. It also added local government units to the categories of eligible entities. Section 7 of Pub. L. 99–80 makes these expanded eligibility criteria applicable to proceedings pending on or after August 5, 1985 (the effective date of that statute), and to proceedings commenced after September 30, 1984 (the sunset date of the original EAJA), even if finally disposed of before August 5, 1985. The final rule amends sections 13.4(b) and 13.10(a)(5) to make the same changes with respect to the same categories of cases. The passage of time has made it unnecessary to provide explicitly for older cases. However, for proceedings commenced before October 1, 1984, and finally decided before August 5, 1985, the older eligibility criteria governs, as follows: Individuals with a net worth of not more than $1 million; sole owners of unincorporated businesses if the owner has a net worth of not more than $5 million, including both personal and business interests, and if the business has no more than 500 employees; and all other partnerships, corporations, associations, or public or private organizations with a net worth of not more than $5 million and with not more than 500 employees.

5. Section 1(c)(3) of Pub. L. 99–80 defines the ''position of the agency'' to include the action or omission that was the basis for the proceeding, and section 1(a)(1) restricts the analysis of whether that position was substantially justified to the administrative record. The final rule revises sections 13.5(a) and 13.10(a)(2) likewise, and it also amends section 13.25(a) to the same end.

6. We no longer take the position that the applicant must have actually paid (or must have actually become obligated to pay) the attorney fees and expenses in order to recover those fees and expenses under EAJA. Accordingly, the final rule deletes the sentence in Section 13.6(a) that stated this position.

7. Pub. L. 104–121 increased the allowable hourly rate for fees from $75 to $125. The final rule amends section 13.6(b) to the same effect.

8. The final rule amends section 13.12(d) to make clear that the adjudicative officer may require further substantiation of fees as well as expenses.

9. The EAJA and the HHS regulation require the prevailing party to file the fee application within 30 days of the final disposition of the administrative proceeding. 5 U.S.C. 504(a)(2); 45 CFR 13.22(a). Section 7(b) of Pub. L. 99–80 provides that, in cases commenced after September 30, 1984 (the sunset date of the original EAJA), and finally disposed of before August 5, 1985 (the effective date of the new law), this 30-day period runs from the latter date. The final rule amends section 13.22(a) to this effect.

10. Section 1(b) of Pub. L. 99–80 provides that when the Government appeals the merits of a proceeding, any fee application is stayed until the appeal is finally resolved, and it specifies that a court decision is deemed to finally dispose of such an appeal only when that decision is final and unreviewable. There is a similar, but more inclusive, stay provision in section 13.22(d). The final rule amends sections 13.22(b) and (d) to conform with the statute. The final rule also revises section 13.23(a) to make clear that, when a fee proceeding is stayed in these circumstances, the agency need answer the fee application only after the final disposition of the underlying controversy.

11. The final rule revises section 13.27 to designate as the review authority on fee decisions the same person or component that would have jurisdiction over an appeal of the merits of the adjudication. It eliminates as unnecessary the requirement that the

appellate authority review fee awards where neither party appeals. It also revises section 13.27(b) to provide for cross-exceptions to be filed from an initial decision on a fee application.

12. Appendix A to the regulation lists the HHS proceedings that are covered by the regulation if the agency's litigating party enters an appearance and participates. The final rule revises the appendix to correct descriptions of categories of proceedings, to correct statutory citations for categories of proceedings, to add regulatory citations for categories, and to add new categories of proceedings that are covered.

13. We interpret the EAJA to include certain HHS proceedings for which the statutory entitlement to a hearing rests either on a statute tracking the language Section 205(b) of the Social Security Act (42 U.S.C. 405(b)) or on a statute incorporating that provision by reference and for which the position of the United States is represented by counsel or otherwise. This interpretation is further supported by the legislative history of Pub. L. 99–80, discussing analogous hearings conducted under the Social Security Administration Representation Project, which was discontinued in 1987. Thus, the final rule adds certain HHS proceedings to Appendix A.

Economic Impact

We have examined the impacts of this final rule as required by Executive Order 12866 (September 1993, Regulatory Planning and Review), the Regulatory Flexibility Act (RFA) (September 19, 1980 Pub. L. 96–354), the Unfunded Mandates Reform Act of 1995 (Pub. L. 104–4), and Executive Order 13132 (Federalism).

Executive Order 12866 (the Order) directs agencies to assess all costs and benefits of available regulatory alternatives and, if regulation is necessary, to select regulatory approaches that maximize net benefits (including potential economic, environmental, public health and safety effects, distributive impacts, and equity). A regulatory impact analysis must be prepared for major rules with economically significant effects ($100 million or more in any 1 year).

We have determined that the final rule is consistent with the principles set forth in the Order, and we also find that the final rule would not have economically significant effects. In addition, the rule is not a major rule as defined at 5 U.S.C. 804(2). In accordance with the provisions of the Order, this regulation was reviewed by the Office of Management and Budget.

The Secretary certifies that this regulation will not have a significant economic impact on a substantial number of small entities. The basis for the Secretary's certification is that, although small entities are eligible to apply for awards, the regulation will apply only to a small number of the proceedings held by the Department each year, and, in many of those proceedings, there will not be any fee award because the Department's position will be substantially justified or its demand will be reasonable. Also, most of the changes reflected in the regulation are mandated by the statute, so it is the statute rather than the regulation that would have any impact. Finally, the procedures prescribed by the regulation are no more onerous than those imposed by the current rule. In sum, the regulation will have negligible effect on such entities.

The Secretary states, in accordance with section 3(c) of Executive Order 12988 (Civil Justice Reform), that the Department has reviewed this final rule in light of section 3 of that Order and that the rule meets the applicable standards in subsections (a) and (b) of that Order.

Section 202 of the Unfunded Mandates Reform Act of 1995 requires that agencies assess anticipated costs and benefits before issuing any rule that may result in expenditure in any 1 year by State, local, or tribal governments, in the aggregate, or by the private sector, of $100 million. As noted above, we find that this final rule would not have an effect of this magnitude on the economy.

Executive Order 13132 establishes certain requirements that an agency must meet when it promulgates a final rule that imposes substantial direct requirement costs on State and local governments, preempts State law, or otherwise has Federalism implications. We have reviewed this final rule under the threshold criteria of Executive order 13132, and we find that there would be no substantial direct effect on the States, on the relationship between the States and the national Government, or on the distribution of power between the levels of government on our federal system. Thus, a federalism impact statement is not required.

Information Collection

In the Notice of Proposed Rulemaking, we solicited comments on the information collection requirements found in proposed sections 13.10, 13.11, and 13.12. We received no comments. We have reconsidered the collection and find that the collection falls within the exception to the Paperwork Reduction Act of 1995 (PRA) at 44 U.S.C. 3518(c)(1)(ii) and in the Office of Management and Budget implementing regulations at 5 CFR 1320.4(a)(2) for collections of information during the conduct of a civil action to which the United States or any official or agency is a party, or during the conduct of an administrative action involving an agency against specific individuals or entities. Therefore, the final rule does not contain information collection requirements covered by the PRA.

List of Subjects in 45 CFR Part 13

Administrative practice and procedure, Claims, Equal access to justice.

■ For the reasons set out in the preamble, the Secretary amends 45 CFR part 13 as follows:

PART 13—[AMENDED]

■ 1. The authority citation for part 13 is revised to read as follows:

Authority: 5 U.S.C. 504(c)(1).

■ 2. In § 13.1, the third sentence is revised to read as follows:

§ 13.1 Purpose of these rules.

* * * The Department may reimburse parties for expenses incurred in adversary adjudications if the party prevails in the proceeding and if the Department's position in the proceeding was not substantially justified or if the action is one to enforce compliance with a statutory or regulatory requirement and the Department's demand is substantially in excess of the ultimate decision and is unreasonable when compared with that decision. * * *

■ 3. Section 13.2 is revised to read as follows:

§ 13.2 When these rules apply.

These rules apply to adversary adjudications before the Department.

■ 4. Section 13.3 is amended by removing the last sentence in paragraph (a), by redesignating paragraph (b) as paragraph (c), and by adding a new paragraph (b) as follows:

§ 13.3 Proceedings covered.

* * * * *

(b) If the agency's litigating party enters an appearance, Department proceedings listed in Appendix A to this part are covered by these rules. Also covered are any other proceedings under statutes that incorporate by reference the procedures of sections 1128(f), 1128A(c)(2), or 1842(j)(2) of the Social Security Act, 42 U.S.C. 1320a–7(f), 1320a–7a(c)(2), or 1395u(j)(2). If a proceeding is not covered under either

of the two previous sentences, a party may file a fee application as otherwise required by this part and may argue that the Act covers the proceeding. Any coverage issue shall be determined by the adjudicative officer and, if necessary, by the appellate authority on review.

* * * * *

■ 5. Section 13.4(b) is revised to read as follows:

§ 13.4 Eligibility of applicants.

* * * * *

(b) The categories of eligible applicants are as follows:

(1) Charitable or other tax-exempt organizations described in section 501(c)(3) of the Internal Revenue Code (26 U.S.C. 501(c)(3)) with not more than 500 employees;

(2) Cooperative associations as defined in section 15(a) of the Agricultural Marketing Act (12 U.S.C. 1141j(a)) with not more than 500 employees;

(3) Individuals with a net worth of not more than $2 million;

(4) Sole owners of unincorporated businesses if the owner has a net worth of not more than $7 million, including both personal and business interests, and if the business has not more than 500 employees;

(5) All other partnerships, corporations, associations, local governmental units, and public and private organizations with a net worth of not more than $7 million and with not more than 500 employees; and

(6) Where an award is sought on the basis stated in § 13.5(c) of this part, small entities as defined in 5 U.S.C. 601.

* * * * *

■ 6. Section 13.5 is amended by redesignating paragraphs (a) through (d) as paragraphs (b)(1) through (b)(4), respectively; adding new paragraph (a) and a paragraph (b) heading; revising newly designated paragraph (b)(1); and adding a new paragraph (c) to read as follows:

§ 13.5 Standards for awards.

(a) An award of fees and expenses may be made either on the basis that the Department's position in the proceeding was not substantially justified or on the basis that, in a proceeding to enforce compliance with a statutory or regulatory requirement, the Department's demand substantially exceeded the ultimate decision and was unreasonable when compared with that decision. These two bases are explained in greater detail in paragraphs (b) and (c) of this section.

(b) *Awards where the Department's position was not substantially justified.*

(1) Awards will be made on this basis only where the Department's position in the proceeding was not substantially justified. The Department's position includes, in addition to the position taken by the agency in the proceeding, the agency action or failure to act that was the basis for the proceeding. Whether the Department's position was substantially justified is to be determined on the basis of the administrative record as a whole. The fact that a party has prevailed in a proceeding does not create a presumption that the Department's position was not substantially justified. The burden of proof as to substantial justification is on the agency's litigating party, which may avoid an award by showing that its position was reasonable in law and fact.

* * * * *

(c) *Awards where the Department's demand was substantially excessive and unreasonable.*

(1) Awards will be made on this basis only where the adversary adjudication arises from the Department's action to enforce a party's compliance with a statutory or regulatory requirement. An award may be made on this basis only if the Department's demand that led to the proceeding was substantially in excess of the ultimate decision in the proceeding, and that demand is unreasonable when compared with that decision, given all the facts and circumstances of the case.

(2) Any award made on this basis shall be limited to the fees and expenses that are primarily related to defending against the excessive nature of the demand. An award shall not include fees and expenses that are primarily related to defending against the merits of charges, or fees and expenses that are primarily related to defending against the portion of the demand that was not excessive, to the extent that these fees and expenses are distinguishable from the fees and expenses primarily related to defending against the excessive nature of the demand.

(3) Awards will be denied if the party has committed a willful violation of law or otherwise acted in bad faith, or if special circumstances make an award unjust.

§ 13.6 [Amended]

■ 7. In § 13.6, the second sentence of paragraph (a) is removed and the first sentence of paragraph (b) is amended by removing ''$75.00'' and adding in its place ''$125.00''.

■ 8.–9. In § 13.10, paragraphs (a)(2) and (a)(3) and the first sentence of paragraph (a)(5) introductory text are revised; paragraph (a)(5)(i) is amended by removing the word ''or'' at the end and paragraph (a)(5)(ii) is amended by adding the word ''or'' at the end; and paragraph (a)(5)(iii) is added to read as follows:

§ 13.10 Contents of application.

(a) * * *

(2) Where an award is sought on the basis stated in § 13.5(b) of this part, a declaration that the applicant believes it has prevailed, and an identification of the position of the Department that the applicant alleges was not substantially justified. Where an award is sought on the basis stated in § 13.5(c) of this part, an identification of the statutory or regulatory requirement that the applicant alleges the Department was seeking to enforce, and an identification of the Department's demand and of the document or documents containing that demand;

(3) Unless the applicant is an individual, a statement of the number of its employees on the date on which the proceeding was initiated, and a brief description of the type and purpose of its organization or business. However, where an award is sought solely on the basis stated in § 13.5(c) of this part, the applicant need not state the number of its employees;

* * * * *

(5) A statement that the applicant's net worth as of the date on which the proceeding was initiated did not exceed the appropriate limits as stated in § 13.4(b) of this part. * * *

* * * * *

(iii) It states that it is applying for an award solely on the basis stated in § 13.5(c) of this part, and that it is a small entity as defined in 5 U.S.C. 601, and it describes the basis for its belief that it qualifies as a small entity under that section.

* * * * *

■ 10.–12. Section 13.11(a) is amended by removing the first sentence and adding in its place the sentences reading as follows:

§ 13.11 Net worth exhibits.

(a) Each applicant must provide with its application a detailed exhibit showing the net worth of the applicant and any affiliates (as defined in § 13.4(f) of this part) when the proceeding was initiated. This requirement does not apply to a qualified tax-exempt organization or cooperative association. Nor does it apply to a party that states that it is applying for an award solely on the basis stated in § 13.5(c) of this part. * * *

* * * * *

■ 13. Section 13.12(d) is revised to read as follows:

§ 13.12 Documentation of fees and expenses.

* * * * *

(d) The adjudicative officer may require the applicant to provide vouchers, receipts, or other substantiation for any fees or expenses claimed, pursuant to § 13.25 of this part.

■ 14. Section 13.22 is amended by revising paragraphs (b) and (d), as follows:

§ 13.22 When an application may be filed.

* * * * *

(b) For purposes of this rule, final disposition means the date on which a decision or order disposing of the merits of the proceeding or any other complete resolution of the proceeding, such as a settlement or voluntary dismissal, becomes final and unappealable, both within the agency and to the courts.

* * * * *

(d) If review or reconsideration is sought or taken, whether within the agency or to the courts, of a decision as to which an applicant believes it has prevailed, proceedings on the application shall be stayed pending final disposition of the underlying controversy.

■ 15. In § 13.23(a), the first sentence is removed and two sentences are added in its place to read as follows:

§ 13.23 Responsive pleadings.

(a) The agency's litigating party shall file an answer within 30 calendar days after service of the application or, where the proceeding is stayed as provided in § 13.22(d) of this part, within 30 calendar days after the final disposition of the underlying controversy. The answer shall either consent to the award or explain in detail any objections to the award requested and identify the facts relied on in support of the agency's position. * * *

* * * * *

■ 16. Section 13.25(a) is amended by adding the following sentence at the end:

§ 13.25 Further proceedings.

(a) * * * In no such further proceeding shall evidence be introduced from outside the administrative record in order to prove that the Department's position was, or was not, substantially justified.

* * * * *

■ 17. Section 13.27 is revised to read as follows:

§ 13.27 Agency review.

(a) The appellate authority for any proceedings shall be the official or component that would have jurisdiction over an appeal of the merits.

(b) If either the applicant or the agency's litigating party seeks review of the adjudicative officer's decision on the fee application, it shall file and serve exceptions within 30 days after issuance of the initial decision. Within another 30 days after receipt of such exceptions, the opposing party, if it has not done so previously, may file its own exceptions to the adjudicative officer's decision. The appellate authority shall issue a final decision on the application as soon as possible or remand the application to the adjudicative officer for further proceedings. Any party that does not file and serve exceptions within the stated time limit loses the opportunity to do so.

■ 18. Appendix A to part 13 is revised to read as follows:

Appendix A to Part 13

Proceedings covered	Statutory authority	Applicable regulations
Office of Inspector General		
1. Proceedings to impose civil monetary penalties, assessments, or exclusions from Medicare and State health care programs.	42 U.S.C. 1320a–7a(c)(2); 1320b–10(c); 1395i–3(b)(3)(B)(ii), (g)(2)(A)(i); 1395/(h)(5)(D), (i)(6); 1395m(a)(11)(A), (a)(18), (b)(5)(C), (j)(2)(A)(iii); 1395u(j)(2), (k), (*l*)(3), (m)(3), (n)(3), (p)(3)(A); 1395y(b)(3)(C), (b)(6)(B); 1395cc(g); 1395dd(d)(1)(A), (B); 1395mm(i)(6)(B); 1395nn(g)(3), (4); 1395ss(d); 1395bbb(c)(1); 1396b(m)(5)(B); 1396r(b)(3)(B)(ii), (g)(2)(A)(i); 1396t(i)(3); 11131(c); 11137(b)(2).	42 CFR Part 1003; 42 CFR Part 1005.
2. Appeals of exclusions from Medicare and State health care programs and/or other programs under the Social Security Act.	42 U.S.C. 1320a–7(f); 1395/(h)(5)(D); 1395m(a)(11)(A), (b)(5)(C); 1395u(j)(2), (k), (*l*)(3), (m)(3), (n)(3), (p)(3)(B).	42 CFR Part 1001; 42 CFR Part 1005.
3. Appeal of exclusions from programs under the Social Security Act, for which services may be provided on the recommendation of a Peer Review Organization.	42 U.S.C. 1320c–5(b)(4), (5)	42 CFR Part 1004; 42 CFR Part 1005.
4. Proceedings to impose civil penalties and assessments for false claims and statements.	31 U.S.C. 3803	45 CFR Part 79.
Centers for Medicare & Medicaid Services		
1. Proceedings to suspend or revoke licenses of clinical laboratories.	42 U.S.C. 263a(i); 1395w–2	42 CFR Part 493, Subpart R.
2. Proceedings provided to a fiscal intermediary before assigning or reassigning Medicare providers to a different fiscal intermediary.	42 U.S.C. 1395h(e)(1)–(3)	42 CFR 421.114, 421.128.
3. Appeals of determinations that an institution or agency is not a Medicare provider of services, and appeals of terminations or nonrenewals of Medicare provider agreements.	42 U.S.C. 1395cc(h); 1395dd(d)(1)(A)	42 CFR 489.53(d); 42 CFR Part 498.
4. Proceedings before the Provider Reimbursement Review Board when Department employees appear as counsel for the intermediary.	42 U.S.C. 1395oo	42 CFR Part 405, Subpart R.

Proceedings covered	Statutory authority	Applicable regulations
5. Appeals of CMS determinations that an intermediate care facility for the mentally retarded (ICFMR) no longer qualifies as an ICFMR for Medicaid purposes.	42 U.S.C. 1396i	42 CFR Part 498.
6. Proceedings to impose civil monetary penalties, assessments, or exclusions from Medicare and State health care programs.	42 U.S.C. 1395i–3(h)(2)(B)(ii); 1395*l*(q)(2)(B)(i); 1395m(a)(11)(A), (c)(4)(C); 1395w–2(b)(2)(A); 1395w–4(g)(1), (g)(3)(B), (g)(4)(B)(ii); 1395nn(g)(5); 1395ss(a)(2), (p)(8), (p)(9)(C), (q)(5)(C), (r)(6)(A), (s)(3), (t)(2); 1395bbb(f)(2)(A); 1396r(h)(3)(C)(ii); 1396r–8(b)(3)(B), (C)(ii); 1396t(j)(2)(C); 1396u(h)(2).	42 CFR Part 1003.
7. Appeals of exclusions from Medicare and State health care programs and/or other programs under the Social Security Act.	42 U.S.C. 1395*l*(q)(2)(B)(ii); 1395m(a)(11)(A), (c)(5)(C); 1395w–4(g)(1), (g)(3)(B), (g)(4)(B)(ii).	42 CFR Part 498; 42 CFR 1001.107.
Food and Drug Administration		
1. Proceedings to withdraw approval of new drug applications.	21 U.S.C. 355(e)	21 CFR Part 12; 21 CFR 314.200.
2. Proceedings to withdraw approval of new animal drug applications and medicated feed applications.	21 U.S.C. 360b(e), (m)	21 CFR Part 12; 21 CFR Part 514, Subpart B.
3. Proceedings to withdraw approval of medical device premarket approval applications.	21 U.S.C. 306e(e), (g)	21 CFR Part 12.
Office for Civil Rights		
1. Proceedings to enforce Title VI of the Civil Rights Act of 1964, which prohibits discrimination on the basis of race, color or national origin by recipients of Federal financial assistance.	42 U.S.C. 2000d–1	45 CFR 80.9.
2. Proceedings to enforce section 504 of the Rehabilitation Act of 1973, which prohibits discrimination on the basis of handicap by recipients of Federal financial assistance.	29 U.S.C. 794a; 42 U.S.C. 2000d–1	45 CFR 84.61.
3. Proceedings to enforce the Age Discrimination Act of 1975, which prohibits discrimination on the basis of age by recipients of Federal financial assistance.	42 U.S.C. 6104(a)	45 CFR 91.47.
4. Proceedings to enforce Title IX of the Education Amendments of 1972, which prohibits discrimination on the basis of sex in certain education programs by recipients of Federal financial assistance.	20 U.S.C. 1682	45 CFR 86.71.

Dated: October 14, 2003.

Tommy G. Thompson,

Secretary.

[FR Doc. 04–1163 Filed 1–20–04; 8:45 am]

BILLING CODE 4150–26–P

FEDERAL COMMUNICATIONS COMMISSION

47 CFR Parts 15 and 76

[DA 03–3848]

Editorial Modification of the Commission's Rules

AGENCY: Federal Communications Commission.

ACTION: Final rule.

SUMMARY: This document provides a more efficiently organized presentation of the various materials, *e.g.,* standards, specifications, and similar documents that are referenced in the regulations for radio frequency devices and multichannel video and cable television services in the rules, certain administrative revisions are necessary to those rules.

DATES: Effective January 21, 2004.

FOR FURTHER INFORMATION CONTACT: Alan Stillwell, Office of Engineering and Technology, (202) 418–2925.

SUPPLEMENTARY INFORMATION: This is a summary of the Commission's *Order,* DA 03–3848, adopted December 4, 2003 and released December 5, 2003. The full text of this document is available on the Commission's Internet site at *http://www.fcc.gov.* It is also available for inspection and copying during regular business hours in the FCC Reference Center (Room CY–A257), 445 12th Street., SW., Washington, DC 20554. The full text of this document also may be purchased from the Commission's duplication contractor, Qualex International, Portals II, 445 12th St., SW., Room CY–B402, Washington, DC 20554; telephone (202) 863–2893; fax (202) 863–2898; e-mail *qualexint@aol.com.*

Summary of the Order

1. In order to provide a more efficiently organized presentation of the various materials, *e.g.,* standards, specifications, and similar documents that are referenced in the regulations for radio frequency devices in part 15 of the rules and in the regulations for multichannel video and cable television services in part 76 of the rules, certain administrative revisions are necessary to those rules.

2. Authority for adoption of the foregoing revisions is contained in 47 CFR 0.231(b).

3. The amendments adopted pertain to agency organization, procedure, and practice. Consequently, the notice and

comment provisions of the Administrative Procedure Act, contained in 5 U.S.C. 553(b), are inapplicable.

Ordering Clauses

4. Accordingly, *it is ordered* that parts 15 and 76 of the Commission's rules, set forth in Title 47 of the Code of Federal Regulations, *are amended,* effective January 21, 2004.

List of Subjects in 47 CFR Parts 15 and 76

Cable television, Incorporation by reference, Television.

Federal Communications Commission.

Marlene H. Dortch,

Secretary.

Rule Changes

■ For the reasons discussed in the preamble, the Federal Communications Commission amends 47 CFR parts 15 and 76 to read as follows:

PART 15—RADIO FREQUENCY DEVICES

■ 1. The authority for part 15 is revised to read as follows:

Authority: 47 U.S.C. 154, 302a, 303, 304, 307, 336, and 544a.

■ 2. Section 15.109 is amended by revising the introductory text of paragraph (g) to read as follows:

§ 15.109 Radiated emission limits.

* * * * *

(g) As an alternative to the radiated emission limits shown in paragraphs (a) and (b) of this section, digital devices may be shown to comply with the standards contained in Third Edition of the International Special Committee on Radio Interference (CISPR), Pub. 22, ''Information Technology Equipment—Radio Disturbance Characteristics—Limits and Methods of Measurement'' (incorporated by reference, *see* § 15.38). In addition:

* * * * *

■ 3. Section 15.118 is amended by revising paragraph (b) to read as follows:

§ 15.118 Cable ready consumer electronics equipment.

* * * * *

(b) Cable ready consumer electronics equipment shall be capable of receiving all NTSC or similar video channels on channels 1 through 125 of the channel allocation plan set forth in EIA IS–132: ''Cable Television Channel Identification Plan'' (incorporated by reference, *see* § 15.38).

* * * * *

■ 4. Section 15.120 is amended by revising paragraph (d)(1) to read as follows:

§ 15.120 Program blocking technology requirements for television receivers.

* * * * *

(d) * * *

(1) Analog television receivers will receive program ratings transmitted pursuant to EIA–744: ''Transport of Content Advisory Information Using Extended Data Service (XDS)'' (incorporated by reference, *see* § 15.38) and EIA–608: ''Recommended Practice for Line 21 Data Service'' (incorporated by reference, *see* § 15.38). Blocking of programs shall occur when a program rating is received that meets the pre-determined user requirements.

* * * * *

■ 5. Section 15.122 is amended by revising paragraph (b) to read as follows:

§ 15.122 Closed caption decoder requirements for digital television receivers and converter boxes.

* * * * *

(b) Digital television receivers and tuners must be capable of decoding closed captioning information that is delivered pursuant to EIA–708–B: ''Digital Television (DTV) Closed Captioning'' (incorporated by reference, *see* § 15.38).

* * * * *

PART 76—MULTICHANNEL VIDEO AND CABLE TELEVISION SERVICE

■ 6. The authority for part 76 is revised to read as follows:

Authority: 47 U.S.C. 151, 152, 153, 154, 301, 302a, 303, 303a, 307, 308, 309, 312, 317, 325, 338, 339, 503, 521, 522, 531, 532, 533, 534, 535, 536, 537, 543, 544, 544a, 545, 548, 549, 552, 554, 556, 558, 560, 561, 571, 572, and 573.

■ 7. Section 76.605 is amended by revising paragraph (a)(1)(ii) to read as follows:

§ 76.605 Technical Standards.

* * * * *

(a) * * *

(1) * * *

(ii) Cable television systems shall transmit signals to subscriber premises equipment on frequencies in accordance with the channel allocation plan set forth in EIA IS–132: ''Cable Television Channel Identification Plan'' (incorporated by reference, *see* § 76.602). This requirement is applicable on May 31, 1995, for new and re-built cable systems, and on June 30, 1997, for all cable systems.

* * * * *

[FR Doc. 04–1127 Filed 1–20–04; 8:45 am]

BILLING CODE 6712–01–P

DEPARTMENT OF COMMERCE

National Oceanic and Atmospheric Administration

50 CFR Part 679

[Docket No. 031126295–3295–01; I.D. 011304B]

Fisheries of the Exclusive Economic Zone Off Alaska; Atka Mackerel Lottery in Areas 542 and 543

AGENCY: National Marine Fisheries Service (NMFS), National Oceanic and Atmospheric Administration (NOAA), Commerce.

ACTION: Notification of fishery assignments.

SUMMARY: NMFS is notifying the owners and operators of registered vessels of their assignments for the A season Atka mackerel fishery in harvest limit area (HLA) 542 and/or 543 of the Aleutian Islands subarea of the Bering Sea and Aleutian Islands management area (BSAI). This action is necessary to allow the harvest of the A season HLA limits established for area 542 and area 543 pursuant to the interim 2004 harvest specifications for groundfish.

DATES: Effective 1200 hrs, Alaska local time (A.l.t.), January 20, 2004, until 1200 hrs, A.l.t., April 15, 2004.

FOR FURTHER INFORMATION CONTACT: Andrew Smoker, 907–586–7228.

SUPPLEMENTARY INFORMATION: NMFS manages the groundfish fishery in the BSAI exclusive economic zone according to the Fishery Management Plan for the Groundfish Fishery of the Bering Sea and Aleutian Islands Area (FMP) prepared by the North Pacific Fishery Management Council under authority of the Magnuson-Stevens Fishery Conservation and Management Act. Regulations governing fishing by U.S. vessels in accordance with the FMP appear at subpart H of 50 CFR part 600 and 50 CFR part 679.

In accordance with § 679.20(a)(8)(iii)(A), owners and operators of vessels using trawl gear for directed fishing for Atka mackerel in the HLA are required to register with NMFS. In accordance with § 679.20(a)(8)(iii)(A)(1), owners and operators that wish to participate in the A season HLA fishery must register their vessels with NMFS by 4:30 pm., A.l.t.

on the first working day following January 1. Six vessels have registered with NMFS to fish in the A season HLA fisheries in areas 542 and/or 543. In order to reduce the amount of daily catch in the HLA by about half and to disperse the fishery over time and in accordance with § 679.20(a)(8)(iii)(B), the Administrator, Alaska Region, NMFS, has randomly assigned each vessel to the HLA directed fishery for Atka mackerel for which they have registered and is now notifying each vessel of its assignment.

Vessels authorized to participate in the first HLA directed fishery in area 542 and/or the second HLA directed fishery in area 543 in accordance with § 679.20(a)(8)(iii) are as follows: Federal Fishery Permit number (FFP) 3819 Alaska Spirit, FFP 3400 Alaska Ranger, and FFP 2443 Alaska Juris.

Vessels authorized to participate in the first HLA directed fishery in area 543 and/or the second HLA directed fishery in area 542 in accordance with § 679.20(a)(8)(iii) are as follows: FFP 4093 Alaska Victory, FFP 3835 Seafisher, and FFP 3423 Alaska Warrior.

Classification

The Assistant Administrator for Fisheries, NOAA (AA), finds good cause to waive the requirement to provide prior notice and opportunity for public comment pursuant to the authority set forth at 5 U.S.C. 553(b)(B) as such requirement is unnecessary. This notice merely advises the owners of these vessels of the results of a random assignment required by regulation. The notice needs to occur immediately to notify the owner of each vessel of its assignment to allow these vessel owners to plan for participation in the A season HLA fisheries in area 542 and area 543.

The AA also finds good cause to waive the 30–day delay in the effective date of this action under 5 U.S.C. 553(d)(3). This finding is based upon the reasons provided above for waiver of prior notice and opportunity for public comment.

This action is required by § 679.20 and 679.22 and is exempt from review under Executive Order 12866.

Authority: 16 U.S.C. 1801 *et seq.*

Dated: January 14, 2004.

Bruce C. Morehead,

Acting Director, Office of Sustainable Fisheries, National Marine Fisheries Service.

[FR Doc. 04–1218 Filed 1–20–04; 8:45 am]

BILLING CODE 3510–22–S

DEPARTMENT OF COMMERCE

National Oceanic and Atmospheric Administration

50 CFR Part 679

[Docket No. 031126297–3297–01; I.D. 011304D]

Fisheries of the Exclusive Economic Zone Off Alaska; Pollock in Statistical Area 630 of the Gulf of Alaska

AGENCY: National Marine Fisheries Service (NMFS), National Oceanic and Atmospheric Administration (NOAA), Commerce.

ACTION: Closure.

SUMMARY: NMFS is prohibiting directed fishing for pollock in Statistical Area 630 of the Gulf of Alaska (GOA). This action is necessary to prevent exceeding the first seasonal allowance of the pollock interim total allowable catch (TAC) for Statistical Area 630 of the GOA.

DATES: Effective 1200 hrs, Alaska local time (A.l.t.), January 21, 2004, until superseded by the notice of Final 2004 Harvest Specifications of Groundfish for the GOA, which will be published in the **Federal Register**.

FOR FURTHER INFORMATION CONTACT: Josh Keaton, 907–586–7228.

SUPPLEMENTARY INFORMATION: NMFS manages the groundfish fishery in the GOA exclusive economic zone according to the Fishery Management Plan for Groundfish of the Gulf of Alaska (FMP) prepared by the North Pacific Fishery Management Council under authority of the Magnuson-Stevens Fishery Conservation and Management Act. Regulations governing fishing by U.S. vessels in accordance with the FMP appear at subpart H of 50 CFR part 600 and 50 CFR part 679.

The first seasonal allowance of the pollock interim TAC in Statistical Area 630 of the GOA is 2,274 metric tons (mt) as established by the interim 2004 harvest specifications for groundfish of the GOA (68 FR 67964, December 5, 2003).

In accordance with § 679.20(d)(1)(i), the Administrator, Alaska Region, NMFS (Regional Administrator), has determined that the first seasonal allowance of the pollock interim TAC in Statistical Area 630 will soon be reached. Therefore, the Regional Administrator is establishing a directed fishing allowance of 2,000 mt, and is setting aside the remaining 274 mt as bycatch to support other anticipated groundfish fisheries. In accordance with § 679.20(d)(1)(iii), the Regional Administrator finds that this directed fishing allowance will soon be reached. Consequently, NMFS is prohibiting directed fishing for pollock in Statistical Area 630 of the GOA.

Maximum retainable amounts may be found in the regulations at § 679.20(e) and (f).

Classification

This action responds to the best available information recently obtained from the fishery. The Assistant Administrator for Fisheries, NOAA, (AA), finds good cause to waive the requirement to provide prior notice and opportunity for public comment pursuant to the authority set forth at 5 U.S.C. 553(b)(B) as such requirement is impracticable and contrary to the public interest. This requirement is impracticable and contrary to the public interest as it would prevent the Agency from responding to the most recent fisheries data in a timely fashion and would delay the closure of the pollock fishery under the interim TAC in Statistical Area 630.

The AA also finds good cause to waive the 30–day delay in the effective date of this action under 5 U.S.C. 553(d)(3). This finding is based upon the reasons provided above for waiver of prior notice and opportunity for public comment.

This action is required by section 679.20 and is exempt from review under Executive Order 12866.

Authority: 16 U.S.C. 1801 *et seq.*

Dated: January 14, 2004.

Bruce C. Morehead,

Acting Director, Office of Sustainable Fisheries,National Marine Fisheries Service.

[FR Doc. 04–1219 Filed 1–20–04; 8:45 am]

BILLING CODE 3510–22–S

DEPARTMENT OF COMMERCE

National Oceanic and Atmospheric Administration

50 CFR Part 679

[Docket No. 031126295-3295-01; I.D. 011304A]

Fisheries of the Exclusive Economic Zone Off Alaska; Atka Mackerel in the Bering Sea and Aleutian Islands

AGENCY: National Marine Fisheries Service (NMFS), National Oceanic and Atmospheric Administration (NOAA), Commerce.

ACTION: Closures and openings.

SUMMARY: NMFS is prohibiting directed fishing for Atka mackerel with gears

other than jig in the Eastern Aleutian District (Statistical Area 541) and the Bering Sea subarea of the Bering Sea and Aleutian Islands management area (BSAI). This action is necessary to prevent exceeding the interim 2004 total allowable catch (TAC) of Atka mackerel in these areas. NMFS is also announcing the opening and closure dates of the first and second directed fisheries within the harvest limit area (HLA) in Statistical Areas 542 and 543. These actions are necessary to prevent exceeding the HLA limits established for the Central (area 542) and Western (area 543) Aleutian Districts pursuant to the interim 2004 Atka mackerel TAC.

DATES: Prohibition of directed fishing for Atka mackerel with gears other than jig in the Eastern Aleutian District and the Bering Sea subarea is effective 1200 hrs, Alaska local time (A.l.t.), January 22, 2004, until superseded by the notice of Final 2004 Harvest Specifications for Groundfish, which will be published in the **Federal Register**. The first directed fisheries in the HLA in area 542 and area 543 are open effective 1200 hrs, A.l.t., January 24, 2004. The first HLA fisheries in area 542 and 543 will remain open until 1200 hrs, A.l.t., February 2, 2004. The second directed fisheries in the HLA in area 542 and area 543 are open effective 1200 hrs, A.l.t., February 4, 2004. The second HLA fisheries in area 542 and 543 will remain open until 1200 hrs, A.l.t., February 13, 2004.

FOR FURTHER INFORMATION CONTACT: Andrew Smoker, 907–586–7228.

SUPPLEMENTARY INFORMATION: NMFS manages the groundfish fishery in the BSAI exclusive economic zone according to the Fishery Management Plan for the Groundfish Fishery of the Bering Sea and Aleutian Islands Area (FMP) prepared by the North Pacific Fishery Management Council under authority of the Magnuson-Stevens Fishery Conservation and Management Act. Regulations governing fishing by U.S. vessels in accordance with the FMP appear at subpart H of 50 CFR part 600 and 50 CFR part 679.

The interim Atka mackerel TAC for other gear in the Eastern Aleutian District and the Bering Sea subarea is 8,763 metric tons (mt) as established by the Interim 2004 Harvest Specifications for Groundfish (68 FR 68265, December 8, 2003). See §§679.20(c)(2)(ii) and 679.20(a)(8)(ii).

In accordance with §679.20(d)(1)(i), the Administrator, Alaska Region, NMFS (Regional Administrator), has determined that the interim other gear TAC for Atka mackerel in the Eastern Aleutian District and the Bering Sea subarea will be reached. Therefore, the Regional Administrator is establishing a directed fishing allowance of 5,000 mt, and is setting aside the remaining 3,763 mt as bycatch to support other anticipated groundfish fisheries. In accordance with §679.20(d)(1)(iii), the Regional Administrator finds that this directed fishing allowance soon will be reached. Consequently, NMFS is prohibiting directed fishing for Atka mackerel in the Eastern Aleutian District and the Bering Sea subarea of the BSAI.

In accordance with §679.20(a)(8)(iii)(C), the Regional Administrator is opening the first directed fisheries for Atka mackerel within the HLA in areas 542 and 543, 48 hours after the closure of the area 541 Atka mackerel directed fishery. The Regional Administrator has established the opening date for the second HLA directed fisheries as 48 hours after the last closure of the first HLA fisheries in either 542 or 543. Consequently, NMFS is opening and closing directed fishing for Atka mackerel in the HLA of areas 542 and 543 in accordance with the periods listed under the DATES section of this notice.

In accordance with §679.20(a)(8)(iii), vessels using trawl gear for directed fishing for Atka mackerel have previously registered with NMFS to fish in the HLA fisheries in areas 542 and/or 543. NMFS has randomly assigned each vessel to the directed fishery or fisheries for which they have registered. NMFS has notified each vessel owner as to which fishery each vessel has been assigned by NMFS. That notification is published elsewhere in this issue.

In accordance with §679.20(a)(8)(ii)(C)(1), the HLA limit of the interim TAC in areas 542 and 543 are 7,321 mt and 5,097 mt respectively. Based on those limits and the proportion of the number of vessels in each fishery compared to the total number of vessels participating in the HLA directed fishery for area 542 or 543, the harvest limits for each HLA directed fishery in areas 542 and 543 are as follows: for the first directed fishery in area 542, 3,661 mt; for the first directed fishery in area 543, 2,549 mt; for the second directed fishery in area 542, 3,660 mt; and for the second directed fishery in area 543, 2,548 mt. In accordance with §679.20(a)(8)(iii)(E), the Regional Administrator has establish the closure dates of the Atka mackerel directed fisheries in the HLA for areas 542 and 543 based on the amount of the harvest limit and the estimated fishing capacity of the vessels assigned to the respective fisheries. Consequently, NMFS is prohibiting directed fishing for Atka mackerel in the HLA of areas 542 and 543 in accordance with the dates and times listed under the DATES section of this notice.

Classification

This action responds to the best available information recently obtained from the fishery. The Assistant Administrator for Fisheries, NOAA, (AA), finds good cause to waive the requirement to provide prior notice and opportunity for public comment pursuant to the authority set forth at 5 U.S.C. 553(b)(B) as such requirement is impracticable and contrary to the public interest. This requirement is impracticable and contrary to the public interest as it would prevent the Agency from responding to the most recent fisheries data in a timely fashion and would delay the closure of the fishery under the 2004 interim TAC of Atka mackerel in the Eastern Aleutian District and the Bering Sea subarea and the opening and closures of the fisheries for the HLA limits established for the Central (area 542) and Western (area 543) Aleutian Districts pursuant to the interim 2004 Atka mackerel TAC.

The AA also finds good cause to waive the 30-day delay in the effective date of this action under 5 U.S.C. 553(d)(3). This finding is based upon the reasons provided above for waiver of prior notice and opportunity for public comment.

This action is required by §679.20 and is exempt from review under Executive Order 12866.

Authority: 16 U.S.C. 1801 *et seq.*

Dated: January 14, 2004.

Bruce C. Morehead,

Acting Director, Office of Sustainable Fisheries, National Marine Fisheries Service.

[FR Doc. 04–1217 Filed 1–20–04; 8:45 am]

BILLING CODE 3510–22–S

Proposed Rules

Federal Register
Vol. 69, No. 13
Wednesday, January 21, 2004

This section of the FEDERAL REGISTER contains notices to the public of the proposed issuance of rules and regulations. The purpose of these notices is to give interested persons an opportunity to participate in the rule making prior to the adoption of the final rules.

DEPARTMENT OF AGRICULTURE

Natural Resources Conservation Service

7 CFR Part 1469

Conservation Security Program

AGENCY: Natural Resources Conservation Service, USDA.

ACTION: Proposed rule; notice of meetings; correction.

SUMMARY: This document corrects the summary information to a notice of meetings associated with its Conservation Security Program (CSP) proposed rule published in the **Federal Register** on January 14, 2004. This document changes the date that the Natural Resources Conservation Service (NRCS) will accept comments to its proposed rule from March 1, 2004, to March 2, 2004. This change clarifies that the public comment closing date for the CSP proposed rule is March 2, 2004, as published in the **Federal Register** on January 2, 2004.

FOR FURTHER INFORMATION CONTACT: Diane Heard, Office of the Deputy Chief for Programs, telephone: (202) 720–3587; fax: (202) 720–6559; email: *diane.heard@usda.gov.*

Correction

In FR Doc. 04–728, in the issue of January 14, 2004, make the following correction to the **SUMMARY**. On page 2083, in the third column, in the fifth and sixth lines, correct ''March 1, 2004'' to read ''March 2, 2004''.

Dated: January 14, 2004.

Helen V. Huntington,

Federal Register Liaison, Natural Resources Conservation Service.

[FR Doc. 04–1122 Filed 1–20–04; 8:45 am]

BILLING CODE 3410–16–M

DEPARTMENT OF THE TREASURY

Office of the Comptroller of the Currency

12 CFR Chap. I

[Docket No. 004–05]

BOARD OF GOVERNORS OF THE FEDERAL RESERVE SYSTEM

12 CFR Chap. II

[Docket No. R–1180]

FEDERAL DEPOSIT INSURANCE CORPORATION

12 CFR Chap. III

DEPARTMENT OF THE TREASURY

Office of Thrift Supervision

12 CFR Chap. V

[No. 2003–67]

Request for Burden Reduction Recommendations; Consumer Protection: Lending-Related Rules; Economic Growth and Regulatory Paperwork Reduction Act of 1996 Review

AGENCIES: Office of the Comptroller of the Currency (OCC), Treasury; Board of Governors of the Federal Reserve System (Board); Federal Deposit Insurance Corporation (FDIC); and Office of Thrift Supervision (OTS), Treasury.

ACTION: Notice of regulatory review; request for comments.

SUMMARY: The OCC, Board, FDIC, and OTS (''we'' or ''the Agencies'') are reviewing our regulations to identify outdated, unnecessary, or unduly burdensome regulatory requirements pursuant to the Economic Growth and Regulatory Paperwork Reduction Act of 1996 (EGRPRA). Today, we request your comments and suggestions on ways to reduce burden in rules we have categorized as Consumer Protection: Lending-Related Rules, consistent with our statutory obligations. All comments are welcome. We specifically invite comment on the following issues: whether statutory changes are needed; whether the regulations contain requirements that are not needed to serve the purposes of the statutes they implement; the extent to which the regulations may adversely affect competition; the cost of compliance associated with reporting, recordkeeping, and disclosure requirements, particularly on small institutions; whether any regulatory requirements are inconsistent or redundant; and whether any regulations are unclear.

We will analyze the comments received and propose burden reducing changes to our regulations where appropriate. Some of your suggestions for burden reduction might require legislative changes. Where legislative changes would be required, we will consider your suggestions in recommending appropriate changes to the Congress.

DATES: Written comments must be received no later than April 20, 2004.

ADDRESSES: You may submit comments by any of the following methods:

EGRPRA Web site: *http://www.EGRPRA.gov.*

- Comments submitted at the Agencies' joint Web site will automatically be distributed to all the Agencies upon receipt. Comments received at the EGRPRA Web site and by other means will be posted on the Web site to the extent possible.

Individual agency addresses: You are also welcome to submit comments to the Agencies at the following contact points (due to delays in paper mail delivery in the Washington area, commenters may prefer to submit their comments by alternative means):

OCC: You may submit comments, identified by Docket Number 04–05, by any of the following methods:

- *E-mail: regs.comments@occ.treas.gov*. Include Docket Number 04–05 in the subject line of the message.
- *Fax:* (202) 874–4448.
- *Mail:* Public Information Room, Office of the Comptroller of the Currency, 250 E Street, SW., Mailstop 1–5, Washington, DC 20219.

Public Inspection: You may inspect and photocopy comments at the Public Information Room. You can make an appointment to inspect the comments by calling (202) 874–5043.

Board: You may submit comments, identified by Docket Number R–1180, by any of the following methods:

- *E-mail: regs.comments@federalreserve.gov*.

Include Docket Number R–1180, in the subject line of the message.

• *Mail:* Ms. Jennifer J. Johnson, Secretary, Board of Governors of the Federal Reserve System, 20th Street and Constitution Avenue, NW., Washington, DC 20551.

• *Fax:* (202) 452–3819 or (202) 452–3102.

Public Inspection: You may inspect and photocopy comments in Room MP–500 of the Martin Building between 9 a.m. and 5 p.m. on weekdays in accordance with the Board's Rules Regarding Availability of Information, 12 CFR part 261.

FDIC: You may submit comments, identified as EGRPRA burden reduction comments, by any of the following methods:

• *http://www.fdic.gov/regulations/law/federal/propose.html*

• *E-mail: comments@fdic.gov.* Include ''EGRPRA burden reduction comment'' in the subject line of the message.

• *Mail:* Robert E. Feldman, Executive Secretary, Federal Deposit Insurance Corporation, 550 17th Street, NW., Washington, DC 20429.

• *Hand Delivery:* Comments may be hand delivered to the guard station at the rear of the 550 17th Street Building (located on F Street) on business days between 7 a.m. and 5 p.m.

Public Inspection: You may inspect comments at the FDIC Public Information Center, Room 100, 801 17th Street, NW., between 9 a.m. and 4:30 p.m. on business days.

OTS: You may submit comments, identified by ''No. 2003–67,'' by any of the following methods:

• *E-Mail: regs.comments@ots.treas.gov*. Include ''No. 2003–67'' in the subject line of the message, and provide your name and telephone number.

• *Fax:* (202) 906-6518.

• *Mail:* Regulation Comments, Chief Counsel's Office, Office of Thrift Supervision, 1700 G Street, NW., Washington, DC 20552.

• *Hand Delivery:* Comments may be hand delivered to the Guard's Desk, East Lobby Entrance, 1700 G Street, NW., from 9 a.m. to 4 p.m. on business days, Attention: Regulation Comments, Chief Counsel's Office.

Public Inspection: OTS will post comments and the related index on the OTS Internet Site at *http://www.ots.treas.gov*. In addition, you may inspect comments at the Public Reading Room, 1700 G Street, NW., by appointment. To make an appointment for access, call (202) 906–5922, send an e-mail to *public.info@ots.treas.gov,* or send a fax to (202) 906–7755. (Please identify the material you would like to inspect to assist us in serving you.)

FOR FURTHER INFORMATION CONTACT:

OCC:

• *Mark Tenhundfeld,* Assistant Director, Legislative and Regulatory Activities Division, (202) 874–5090.

• *Lee Walzer,* Counsel, Legislative and Regulatory Activities Division, (202) 874–5090.

Board:

• *Patricia A. Robinson,* Managing Senior Counsel, Legal Division, (202) 452–3005.

• *Michael J. O'Rourke,* Counsel, Legal Division, (202) 452–3288.

• *John C. Wood,* Counsel, Division of Consumer and Community Affairs, (202) 452–2412.

• *Arleen Lustig,* Supervisory Financial Analyst, Division of Banking Supervision and Regulation, (202) 452–5259.

• For users of Telecommunications Device for the Deaf (TDD) only, contact (202) 263–4869.

FDIC:

• *Claude A. Rollin,* Special Assistant to the Vice Chairman, (202) 898–8741.

• *Steven D. Fritts,* Associate Director, Division of Supervision and Consumer Protection, (202) 898–3723.

• *Ruth R. Amberg,* Senior Counsel, Legal Division, (202) 898–3736.

• *Thomas Nixon,* Counsel, Legal Division, (202) 898–8766.

OTS:

• *Robyn Dennis,* Manager, Thrift Policy, Supervision Policy, (202) 906–5751.

• *Karen Osterloh,* Special Counsel, Regulations and Legislation Division, Chief Counsel's Office, (202) 906–6639.

SUPPLEMENTARY INFORMATION:

I. Introduction

The Agencies are asking for your comments and suggestions on ways in which the Agencies can reduce regulatory burdens consistent with our statutory obligations. Today, we request your input to help us identify which Consumer Protection Lending-Related rules are outdated, unnecessary, or unduly burdensome. The rules in this category are listed in a chart at the end of this notice. Please send us your recommendations at our Web site, *http://www.EGRPRA.gov,* or to one of the listed addresses.

The rest of this notice will discuss the essential elements of our EGRPRA review project, some suggestions we received on carrying it out, and today's request for comment.

II. Agencies' Proposed and Current Plan

A. The EGRPRA Review Requirements and the Agencies'[1] Proposed Plan

This current request for comment is part of the review required by section 2222 of EGRPRA.[2] We described the EGRPRA review's requirements in our initial notice of the EGRPRA project published in the June 16, 2003, **Federal Register**.[3] As part of our review, we ask for comments not only on burden imposed by individual regulatory requirements, but also on the cumulative effect of the rules.

The EGRPRA review required us to categorize our rules by type. Our June 16, 2003 **Federal Register** publication placed our rules into 12 categories. The categories are:

1. Applications and Reporting;
2. Banking Operations;
3. Capital;
4. Community Reinvestment Act;
5. Consumer Protection;
6. Directors, Officers and Employees;
7. International Operations;
8. Money Laundering;
9. Powers and Activities;
10. Rules of Procedure;
11. Safety and Soundness;
12. Securities.

To spread the work of commenting on and reviewing the categories of rules over a reasonable period of time, we proposed to publish one or more categories of rules approximately every six months between 2003 and 2006 and provide a 90-day comment period for each publication. We asked for comment on all aspects of our plan, including: the categories, the rules in each category, and the order in which we should review the categories. Because the Agencies were eager to begin reducing unnecessary burden where appropriate, our initial notice also published three categories of rules for comment (Applications and Reporting, Powers and Activities, and International Operations). All our covered categories of rules must be published for comment and reviewed by the end of September, 2006.

The EGRPRA review then requires the Agencies to: (1) Publish a summary of the comments we received, identifying and discussing the significant issues

[1] The National Credit Union Administration has participated in planning the EGRPRA review but has issued, and will issue, requests for comment separately.

[2] Public Law 104–208, Sept. 30, 1996, 12 U.S.C. 3311.

[3] The citation for our first **Federal Register** notice is 68 FR 35589. You can view it at our Web site *http://www.EGRPRA.gov* by clicking on ''**Federal Register** Notices.''

raised in them; and (2) eliminate unnecessary regulatory requirements. Within 30 days after the Agencies publish the comment summary and discussion, the Federal Financial Institutions Examination Council (FFIEC), which is the formal interagency body to which the Agencies belong, must submit a report to the Congress. This report will summarize significant issues raised by the public comments and the relative merits of those issues. It will also analyze whether the appropriate Federal banking agency can address the burdens by regulation, or whether they must be addressed by legislation.

B. Public Response and the Agencies' Current Plan

We received 19 comments in response to the first notice. You can view the comments at our EGRPRA Web site by clicking on ''Comments.'' In addition to soliciting written comments in 2003, we held banker outreach meetings in Orlando, St. Louis, Denver, San Francisco, and New York City in order to hear directly from the industry about ways the Agencies could reduce regulatory burden. More than 250 representatives from the industry attended the outreach meetings. These meetings have given us valuable insights and have helped focus our regulatory burden reduction efforts. We anticipate holding additional outreach events in 2004. We also will be taking into account the important views of consumer and community organizations when we meet with them. You can view descriptions of the meetings and related recommendations at our EGRPRA Web site by clicking on ''Events'' and then choosing a meeting by its location.

The Agencies appreciate the response to our notice and the outreach meetings. The written comments and remarks at the meetings came from individuals, banks, savings associations, holding companies, and industry trade groups. We are actively reviewing the feedback received about specific ways to reduce regulatory burden, as well as conducting our own analyses. Because the main purpose of this notice is to request comment on the next category of regulations, we will not discuss specific recommendations about the first set of regulation categories here. However, as we develop initiatives to reduce burden in the future—whether through regulatory, legislative, or other channels ''we will discuss the public's recommendations that relate to our proposed actions.

We requested comment about our proposed categories and placement of the rules within each category. Industry trade groups and others observed that commenting on all consumer protection regulations at one time would be burdensome in itself and suggested that we might receive more useful feedback if the category was divided. As a result, we divided the consumer protection regulations into two categories: (1) Lending-Related Rules, and (2) Account—Deposit Relationships and Miscellaneous Consumer Rules. The regulations in the Lending-Related Rules category are listed in the chart below. The Account—Deposit Relationships and Miscellaneous Consumer Rules category will contain the remaining rules previously identified in the Consumer Protection category. We plan to request comment on the Account—Deposit Relationships and Miscellaneous Consumer Rules in the next notice.

We also requested comment about the order in which we should review the categories. According to some industry representatives, the requirements imposed by the Consumer Protection regulations are among the most burdensome. Given this response, we will focus on those rules first.

III. Request for Comment on Consumer Protection: Lending—Related Rules Category

Today, we are asking the public to identify the ways in which the Consumer Protection: Lending-Related Rules may be outdated, unnecessary, or unduly burdensome. As noted, the rules in this category are listed in the chart below.

We encourage comments that address not only individual rules or requirements but also pertain to certain product lines. For example, in the case of a particular loan, are any disclosure requirements under one regulation inconsistent with or duplicative of requirements under another regulation? Are there unnecessary records that must be kept? A product line approach is consistent with EGRPRA's focus on how rules interact, and may be especially helpful in exposing redundant or potentially inconsistent regulatory requirements. We recognize that commenters using a product line approach may want to make recommendations about rules that are not in our current request for comment. They should do so since the EGRPRA categories are designed to stimulate creative approaches rather than limiting them.

Specific issues to consider. While all comments are welcome, we specifically invite comment on the following issues:

A. *Need for statutory change.* (1) Do any statutory requirements underlying the rules impose unnecessary, redundant, conflicting or unduly burdensome requirements? (2) Are there less burdensome alternatives?

B. *Need and purpose of the regulations.* (1) Are the regulations consistent with the purposes of the statutes that they implement? (2) Have circumstances changed so that a rule is no longer necessary? (3) Do changes in the financial products and services offered to consumers suggest a need to revise certain regulations (or statutes)? (4) Do any of the regulations impose compliance burdens not required by the statutes they implement?

C. *General approach/flexibility.* (1) Would a different general approach to regulating achieve statutory goals with less burden? (2) Do any of these rules impose unnecessarily inflexible requirements?

D. *Effect of the regulations on competition.* Do any of the regulations or statutes create competitive disadvantages for insured depository institutions compared to the rest of the financial services industry or competitive disadvantages for one type of insured depository institution over another?

E. *Reporting, recordkeeping and disclosure requirements.* (1) Which reporting, recordkeeping, or disclosure requirements impose the most compliance burdens? (2) Are any of the reporting or recordkeeping requirements unnecessary to demonstrate compliance with the law?

F. *Consistency and redundancy.* (1) Are any of the requirements under one regulation inconsistent with or duplicative of requirements under another regulation? (2) If so, are the inconsistencies not warranted by the purposes of the regulations?

G. *Clarity.* Are any of the regulations drafted unclearly?

H. *Burden on small insured institutions.* We have particular interest in minimizing burden on small insured institutions (those with assets of $150 million or less). How could these rules be amended to minimize adverse economic impact on small insured institutions?

The Agencies appreciate the efforts of all interested parties to help us eliminate outdated, unnecessary, or unduly burdensome regulatory requirements.

RULES FOR WHICH COMMENT IS REQUESTED NOW

[Consumer Protection: Lending-Related Rules Category]

Subject	National banks	State member banks	State non-member banks	Thrifts	Holding companies bank [4] thrift
Consumer Protection: Lending-Related Rules					
Interagency Regulations					
Fair Housing	12 CFR Part 27		12 CFR Part 338	12 CFR Part 528 (including other non-discrimination requirements).	
Loans in Identified Flood Hazard Areas.	12 CFR Part 22	12 CFR 208.25 [Reg. H].	12 CFR Part 339	12 CFR Part 572.	
Board Regulations					
Consumer Leasing	12 CFR Part 213 [Reg. M].	12 CFR Part 213 [Reg. M].	12 CFR Part 213 [Reg. M].	12 CFR Part 213 [Reg. M].	12 CFR Part 213 [Reg. M].
					12 CFR Part 213 [Reg. M].
Equal Credit Opportunity.	12 CFR Part 202 [Reg. B].	12 CFR Part 202 [Reg. B].	12 CFR Part 202 [Reg. B].	12 CFR Part 202 [Reg. B].	12 CFR Part 202 [Reg. B].
					12 CFR Part 202 [Reg. B].
Home Mortgage Disclosure Act.	12 CFR Part 203 [Reg. C].	12 CFR Part 203 [Reg. C].	12 CFR Part 203 [Reg. C].	12 CFR Part 203 [Reg. C].	12 CFR Part 203 [Reg. C].
					12 CFR Part 203 [Reg. C].
Truth in Lending	12 CFR Part 226 [Reg. Z].	12 CFR Part 226 [Reg. Z].	12 CFR Part 226 [Reg. Z].	12 CFR Part 226 [Reg. Z].	12 CFR Part 226 [Reg. Z].
					12 CFR Part 226 [Reg. Z].
Unfair or Deceptive Acts or Practices.	12 CFR 227.11–16 [Reg. AA, Subpart B].	12 CFR 227.11–16 [Reg. AA, Subpart B].	12 CFR 227.11–16 [Reg. AA, Subpart B].		
OTS Regulations					
Unfair or Deceptive Acts or Practices.				12 CFR Part 535.	

[4] Foreign banking organizations that conduct banking operations in the U.S., either directly through branches and agencies or indirectly through U.S. bank subsidiaries or commercial lending company subsidiaries, generally are subject to the same regulatory regime as domestic bank holding companies.

Dated: January 14, 2004.

John D. Hawke, Jr.

Comptroller of the Currency.

By order of the Board of Governors of the Federal Reserve System on January 7, 2004.

Jennifer J. Johnson,

Secretary of the Board.

By order of the Board of Directors, Federal Deposit Insurance Corporation.

Dated at Washington, DC, this 2nd day of December, 2003.

Robert E. Feldman,

Executive Secretary.

Dated: December 17, 2003.

By the Office of Thrift Supervision.

Richard M. Riccobono,

Deputy Director.

[FR Doc. 04–1161 Filed 1–20–04; 8:45 am]

BILLING CODE 4810–33–P; 6210–01–P; 6714–01–P; 6720–01–P

DEPARTMENT OF TRANSPORTATION

Federal Aviation Administration

14 CFR Part 39

[Docket No. 2003–SW–23–AD]

RIN 2120–AA64

Airworthiness Directives; Bell Helicopter Textron, a Division of Textron Canada Model 222, 222B, 222U and 230 Helicopters

AGENCY: Federal Aviation Administration, DOT.

ACTION: Notice of proposed rulemaking (NPRM).

SUMMARY: This document proposes superseding an existing airworthiness directive (AD) for Bell Helicopter Textron, a Division of Textron Canada (BHTC) Model 222, 222B, 222U, and 230 helicopters. That AD currently requires a visual check of each main rotor grip (grip) and pitch horn assembly without disassembling the main rotor hub assembly (hub assembly), and a visual inspection at specified intervals of each affected grip and pitch horn assembly for a crack using a 10-power or higher magnifying glass. If a crack is found, the existing AD requires replacing each unairworthy grip or pitch horn with an airworthy part before further flight. This action would require those same actions, and would also require an additional inspection of the grip and pitch horn assembly for a crack in the disassembled hub assembly, and replacing any cracked part with an airworthy part. This proposal is prompted by determination that an additional enhanced inspection is needed to ensure the integrity of the hub assembly. The actions specified by the proposed AD are intended to prevent failure of the grip or pitch horn and subsequent loss of control of the helicopter.

DATES: Comments must be received on or before March 22, 2004.

ADDRESSES: Submit comments in triplicate to the Federal Aviation Administration (FAA), Office of the Regional Counsel, Southwest Region, Attention: Rules Docket No. 2003–SW–23–AD, 2601 Meacham Blvd., Room 663, Fort Worth, Texas 76137. You may also send comments electronically to the Rules Docket at the following address: *9-asw-adcomments@faa.gov.* Comments may be inspected at the Office of the Regional Counsel between 9 a.m. and 3 p.m., Monday through Friday, except Federal holidays.

FOR FURTHER INFORMATION CONTACT: Charles Harrison, Aviation Safety Engineer, FAA, Rotorcraft Directorate, Safety Management Group, Fort Worth, Texas 76193–0110, telephone (817) 222–5128, fax (817) 222–5961.

SUPPLEMENTARY INFORMATION:

Comments Invited

Interested persons are invited to participate in the making of the proposed rule by submitting such written data, views, or arguments as they may desire. Communications should identify the Rules Docket number and be submitted in triplicate to the address specified above. All communications received on or before the closing date for comments will be considered before taking action on the proposed rule. The proposals contained in this document may be changed in light of the comments received.

Comments are specifically invited on the overall regulatory, economic, environmental, and energy aspects of the proposed rule. All comments submitted will be available, both before and after the closing date for comments, in the Rules Docket for examination by interested persons. A report summarizing each FAA-public contact concerned with the substance of this proposal will be filed in the Rules Docket.

Commenters wishing the FAA to acknowledge receipt of their mailed comments submitted in response to this proposal must submit a self-addressed, stamped postcard on which the following statement is made: ''Comments to Docket No. 2003–SW–23–AD.'' The postcard will be date stamped and returned to the commenter.

Discussion

On July 25, 2002, the FAA issued AD 2002–08–54, Amendment 39–12835 (67 FR 50793, August 6, 2002), with a correction published on August 21, 2002 (67 FR 54259), to require, before further flight and at specified intervals, visually checking each affected grip and pitch horn for a crack. The AD also requires using a 10-power or higher magnifying glass to visually inspect each affected grip and pitch horn for a crack at specified intervals. If a crack is found, the AD requires replacing each unairworthy grip or pitch horn with an airworthy part before further flight. That action was prompted by three reports of a fatigue crack in the grip and pitch horn found during a routine inspection of the rotor head. The requirements of that AD are intended to prevent failure of the grip or pitch horn and subsequent loss of control of the helicopter

Since issuing that AD, the manufacturer has determined that a newly developed, enhanced inspection should be required at 2,500 hours time-in-service (TIS) to ensure integrity of the hub assembly. The additional inspections are added to detect cracks that may not be discovered through visual inspections or visual inspections using a magnifying glass with the rotor head assembled, as is currently required.

Transport Canada, the airworthiness authority for Canada, notified the FAA that an unsafe condition may exist on these helicopter models. Transport Canada advises of the need for repeated daily checks and visual inspections at specified intervals, as well as enhanced inspections at specified intervals, of the grip and pitch horn for a crack until the cause of the premature failures is determined. Transport Canada classified these alert service bulletins as mandatory and issued AD No. CF–2002–23R1, dated May 7, 2003, to ensure the continued airworthiness of these helicopters.

These helicopter models are manufactured in Canada and are type certificated for operation in the United States under the provisions of 14 CFR 21.29 and the applicable bilateral agreement. Pursuant to the applicable bilateral agreement, Transport Canada has kept the FAA informed of the situation described above. The FAA has examined the findings of Transport Canada, reviewed all available information, and determined that AD action is necessary for products of these type designs that are certificated for operation in the United States.

This previously described unsafe condition is likely to exist or develop on other helicopters of the same type design. Therefore, the proposed AD would supersede AD 2002–08–54 to require, before further flight and at specified intervals, visually checking each affected grip and pitch horn for a crack. This proposed AD would also require using a 10-power or higher magnifying glass to visually inspect each affected grip and pitch horn for a crack at specified intervals. If a crack is found, this proposed AD would require replacing each cracked part with an airworthy part before further flight. Additionally, this proposed AD would require, for main rotor hubs with 2,500 or more and less than 4,500 hours TIS, within 300 hours TIS or 6 months, whichever occurs first, inspecting for a crack, and if a crack is found, replacing the grip, pitch horn, or attachment bolts with an airworthy part before further flight. Main rotor hubs with less than 2,500 hours TIS would have to be inspected using a magnetic particle or fluorescent penetrant method upon the accumulation of 2,500 hours TIS.

An owner/operator (pilot) may perform the visual check required by paragraph (a) of this proposed AD. The pilot must enter compliance with paragraph (a) of this AD into the helicopter maintenance records in accordance with 14 CFR 43.11 and 91.417(a)(2)(v)). A pilot may perform this check because it involves only a visual check for a crack in the grip or pitch horn and can be performed equally well by a pilot or a mechanic.

The FAA estimates that this proposed AD would affect 107 helicopters of U.S. registry, and the proposed actions would take approximately 32 work hours per helicopter to accomplish at an average labor rate of $65 per work hour. The cost of the main rotor grip would be either $26,226 or $37,748 and the cost of a pitch horn would be either $6,863 or $15,281 (2 pitch horns and 2 grips per helicopter). Based on these figures, the total cost impact of the proposed AD on U.S. operators would be an estimated $2,080 per helicopter each year or $222,560 for the entire fleet, and if all parts were replaced, would be $11,570,766, assuming the most expensive grips and pitch horns were required.

The regulations proposed herein would not have a substantial direct effect on the States, on the relationship between the national Government and the States, or on the distribution of power and responsibilities among the various levels of government. Therefore, it is determined that this proposal would not have federalism implications under Executive Order 13132.

For the reasons discussed above, I certify that this proposed regulation (1) is not a ''significant regulatory action'' under Executive Order 12866; (2) is not a ''significant rule'' under the DOT Regulatory Policies and Procedures (44 FR 11034, February 26, 1979); and (3) if promulgated, will not have a significant

economic impact, positive or negative, on a substantial number of small entities under the criteria of the Regulatory Flexibility Act. A copy of the draft regulatory evaluation prepared for this action is contained in the Rules Docket. A copy of it may be obtained by contacting the Rules Docket at the location provided under the caption **ADDRESSES.**

List of Subjects in 14 CFR Part 39

Air transportation, Aircraft, Aviation safety, Safety.

The Proposed Amendment

Accordingly, pursuant to the authority delegated to me by the Administrator, the Federal Aviation Administration proposes to amend part 39 of the Federal Aviation Regulations (14 CFR part 39) as follows:

PART 39—AIRWORTHINESS DIRECTIVES

1. The authority citation for part 39 continues to read as follows:

Authority: 49 U.S.C. 106(g), 40113, 44701.

§ 39.13 [Amended]

2. Section 39.13 is amended by removing Amendment 39–12835 (67 FR 50793, August 6, 2002), and by adding a new airworthiness directive (AD), to read as follows:

Bell Helicopter Textron, a Division of Textron Canada: Docket No. 2003–SW–23–AD. Supersedes AD 2002–08–54, Amendment 39–12835, Docket No. 2002–SW–22–AD.

Applicability: The following model helicopters with the listed part number (P/N) installed, certificated in any category:

Model	With hub assembly P/N	With grip assembly P/N	With pitch horn assembly P/N
(1) 222 or 222B	222–011–101–103, –105, 107, or –109; 222–012–101–103, or –107.	222–010–104–105; 222–012–104–101	222–011–104–101; 222–012–102–101.
(2) 222U	222–011–101–105, –107, or –109; 222–012–101–103, or –107.	222–010–104–105; 222–012–104–101	222–011–104–101; 222–012–102–101.
(3) 230	222–012–101–105, or –109	222–012–104–101	222–012–102–101.

Compliance: Required as indicated, unless accomplished previously.

To prevent failure of the grip or pitch horn and subsequent loss of control of the helicopter, if either the grip or pitch horn has accumulated 1,250 or more hours time-in-service (TIS) since initial installation on any helicopter, accomplish the following:

(a) Before further flight and thereafter at intervals not to exceed 8 hours TIS:

(1) Wipe clean the main rotor grip and pitch horn surfaces to remove grease and dirt in the check area as shown in Figure 1 of this AD:

BILLING CODE 4910–13–P

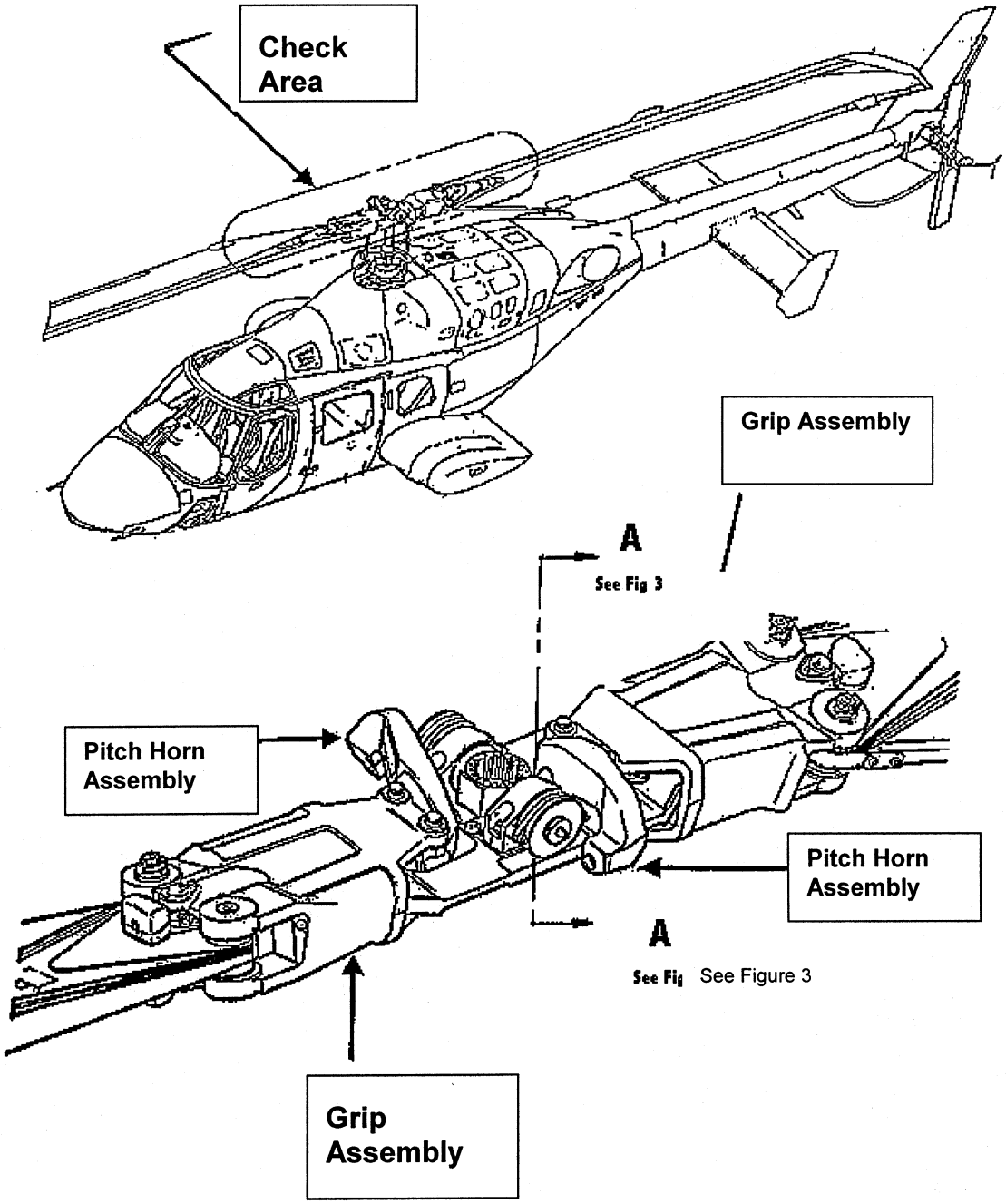
Check Area
Grip Assembly
A
See Fig 3
Pitch Horn Assembly
Pitch Horn Assembly
A
See Fig See Figure 3
Grip Assembly

Figure 1

(2) Visually check both main rotor grips for a crack. Pay particular attention to the inboard and outboard tangs portions of the grip, which are in direct contact with the pitch horns and the main rotor blades and check the area to at least 3 inches beyond the grip to pitch and grip to blade contact areas as shown in Figure 2 of this AD:

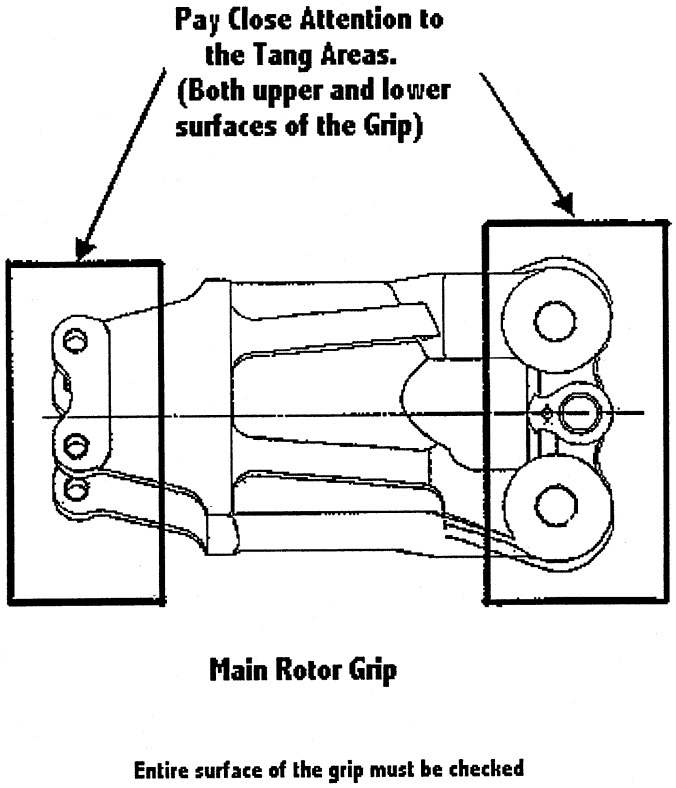

Figure 2

(3) Visually check all visible portions of each pitch horn for a crack. Pay particular attention to the attachment lugs of the pitch horns, which are in direct contact with the inboard tangs of the main rotor grips, as shown in Figure 3 of this AD, and the four large bolt cutouts, as shown in Figure 4 of this AD:

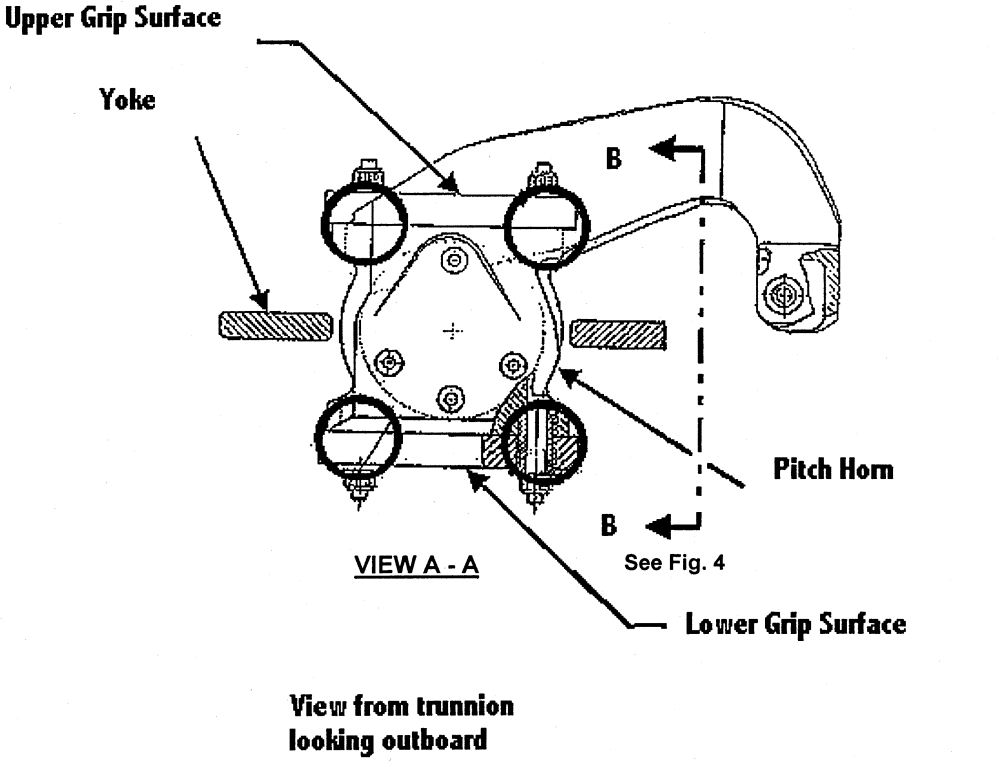

All visible portions of the pitch horn must be checked.
Pay particular attention to the circled areas shown above and View B-B, Fig. 4.

Figure 3

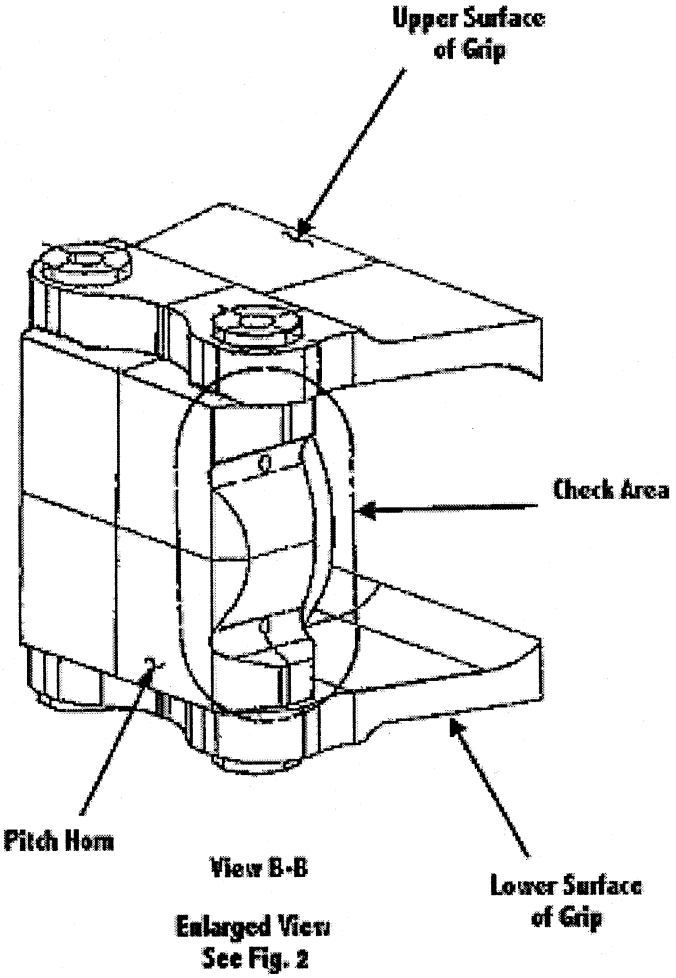

Figure 4

(4) An owner/operator (pilot) holding at least a private pilot certificate may perform the visual check required by paragraph (a) of this AD. The pilot must enter compliance with this paragraph into the helicopter records in accordance with 14 CFR 43.11 and 91.417(a)(2)(v)).

(b) Within 7 days or 10 hours TIS, whichever occurs first, and thereafter at intervals not to exceed 25 hours TIS, without disassembling the main rotor hub assembly (hub assembly) and using a 10-power or higher magnifying glass, inspect each grip and pitch horn assembly for a crack in accordance with paragraphs (a)(1), (a)(2), and (a)(3) of this AD.

(c) Within 300 hours TIS or 6 months, whichever occurs first, for each hub assembly with 2,500 or more and less than 4,500 hours TIS, and within 2,500 hours TIS for each hub assembly with less than 2,500 hours TIS:

(1) Disassemble and clean the main rotor hub assembly.

(2) Inspect the grip and pitch horn assembly using a fluorescent-penetrant inspection method.

(3) Inspect the pitch horn-to-grip attachment bolts and the flapping bearing-to-yoke attachment bolts using a magnetic-particle inspection method. If any of these attachment bolts are made from non-magnetic material, inspect those attachment bolts using a fluorescent-penetrant inspection method.

(4) During reassembly, install new buffers on the pitch horn and flapping bearing assemblies.

(d) If a crack is found, replace the cracked part with an airworthy part before further flight.

Note 3: Bell Helicopter Textron Alert Service Bulletin No. 222–02–93, Revision A, No. 222U–02–64, Revision A, and 230–02–26, Revision A, all dated March 3, 2003, pertain to the subject of this AD.

(e) To request a different method of compliance or a different compliance time for this AD, follow the procedures in 14 CFR 39.19. Contact the Safety Management Group, Rotorcraft Directorate, FAA, for information about previously approved alternative methods of compliance.

Note 4: The subject of this AD is addressed in Transport Canada (Canada) AD CF–2002–23, dated April 2, 2002.

Issued in Fort Worth, Texas, on January 13, 2004.

David A. Downey,

Manager, Rotorcraft Directorate, Aircraft Certification Service.

[FR Doc. 04–1172 Filed 1–20–04; 8:45 am]

BILLING CODE 4910–13–C

DEPARTMENT OF THE TREASURY

Internal Revenue Service

26 CFR Part 1

[REG–146692–03]

RIN 1545–BC59

Mortgage Revenue Bonds

AGENCY: Internal Revenue Service (IRS), Treasury.

ACTION: Cancellation of notice of public hearing on proposed rulemaking.

SUMMARY: This document provides notice of cancellation of a public hearing on proposed regulations that provide guidance regarding the limitation on the effective rate of mortgage interest for purposes of mortgage revenue bonds issued by State and local governments.

DATES: The public hearing originally scheduled for Wednesday, January 28, 2004, at 10 a.m., is cancelled.

FOR FURTHER INFORMATION CONTACT: Treena Garrett of the Publications and Regulations Branch, Associate Chief Counsel (Procedure and Administration) (202) 622–7180 (not a toll-free number).

SUPPLEMENTARY INFORMATION: A notice of proposed rulemaking and notice of public hearing that appeared in the **Federal Register** on Wednesday, November 5, 2003 (68 FR 62549) announced that a public hearing was scheduled for Wednesday, January 28, 2004, at 10 a.m. in the Auditorium, Internal Revenue Service Building, 1111 Constitution Avenue, NW., Washington, DC. The subject of the public hearing is proposed regulations under sections 103, 141, 143 and 148 of the Internal Revenue Code. The public comment period for these proposed regulations expired on Wednesday, January 7, 2004. Outlines of oral comments were due on Wednesday, January 7, 2004.

The notice of proposed rulemaking and notice of public hearing, instructed those interested in testifying at the public hearing to submit a request to speak and an outline of the topics to be addressed. As of Thursday, January 15, 2004, no one has requested to speak. Therefore, the public hearing scheduled for Wednesday, January 28, 2004, is cancelled.

LaNita Van Dyke,

Acting Chief, Publications and Regulations Branch, Legal Processing Division, Associate Chief Counsel (Procedure and Administration).

[FR Doc. 04–1225 Filed 1–20–04; 8:45 am]

BILLING CODE 4830–01–P

FEDERAL COMMUNICATIONS COMMISSION

47 CFR Parts 0, 1, 61, and 69

[CC Docket Nos. 96–262, 94–1, 98–157, and CCB/CPD File No. 98–63; DA 04–31]

Parties Asked To Refresh Record Regarding Reconsideration of Rules Adopted in 1999 Access Reform Docket

AGENCY: Federal Communications Commission.

ACTION: Proposed rule.

SUMMARY: In this document, the Commission invites parties that filed petitions for reconsideration and clarification of rules that the Commission adopted in the 1999 access charge reform docket to update the record. These parties may file any new information or arguments that they believe to be relevant to deciding only those issues that they previously raised in their petitions. Because the petitions for reconsideration and clarification were filed several years ago, the intervening developments and passage of time may have caused the record to become stale. If these parties do not indicate an intent to pursue their previous petitions, the Commission will deem them withdrawn and will dismiss them.

DATES: Comments are due on or before February 20, 2004, and reply comments are due on or before March 8, 2004.

ADDRESSES: Federal Communications Commission, 445 12th Street, SW., Washington, DC 20554. *See* **SUPPLEMENTARY INFORMATION** for filing instructions.

FOR FURTHER INFORMATION CONTACT: Marvin F. Sacks, Attorney-Advisor, Wireline Competition Bureau, Pricing Policy Division, (202) 418–1520 or via the Internet at *marvin.sacks@fcc.gov*.

SUPPLEMENTARY INFORMATION: Below is a summary of the Public Notice that the Commission released on January 8, 2004. In that document, the Commission invites parties to refresh the 1999 Access Reform Docket, CC Docket Nos. 96–262, 94–1, 98–157, and CCB/CPD File No. 98–63 adopted August 5, 1999, and released August 27, 1999. When filing comments and reply comments, parties should reference CC Docket Nos. 96–262, 94–1, 98–157, and CCB/CPD File No. 98–63, and conform to the filing procedures contained in the Notice. All pleadings may be filed using the Commission's Electronic Comment Filing System (ECFS) or by filing paper copies. Comments filed through the ECFS can be sent as an electronic file via the Internet to *http://www.fcc.gov/cgb/ecfs*. Commenters must transmit one electronic copy of the comments to each docket number referenced in the caption. In completing the transmittal screen, commenters should include their full name, U.S. Postal Service mailing address, and the applicable docket number. Parties may also submit an electronic comment by Internet e-mail. To get filing instructions for e-mail comments, commenters should send an e-mail to *ecfs@fcc.gov*, and should include the following words in the body of the message, ''get form.'' A sample form and directions will be sent in reply. Parties who choose to file by paper must file an original and four copies of each filing. If more than one docket number appears in the caption of this proceeding, commenters must submit two additional copies for each additional docket number. Filings can be sent by hand or messenger delivery, by commercial overnight courier, or by first-class or overnight U.S. Postal Service mail (although we continue to experience delays in receiving U.S. Postal Service mail). The Commission's contractor, Natek, Inc., will receive hand-delivered or messenger-delivered paper filings for the Commission's Secretary at 236 Massachusetts Avenue, NE., Suite 110, Washington, DC 20002. The filing hours at this location are 8 a.m. to 7 p.m. All hand deliveries must be held together with rubber bands or fasteners. Any envelopes must be disposed of before entering the building. Commercial overnight mail (other than U.S. Postal Service Express Mail and Priority Mail) must be sent to 9300 East Hampton Drive, Capitol Heights, MD 20743. U.S. Postal Service first-class mail, Express Mail, and Priority Mail should be addressed to 445 12th Street, SW., Washington, DC 20554. The Commission advises that electronic media not be sent through USPS. All filings must be addressed to the Commission's Secretary, Office of the Secretary, Federal Communications Commission, 445 12th Street, SW., Suite TW–A325, Washington, DC 20554. Two (2) copies of the comments and reply comments should also be sent to Deena Shetler, Deputy Division Chief, Pricing Policy Division, Wireline Competition Bureau, Federal Communications Commission, 445 12th Street, SW., Room 5–A121, Washington, DC 20554. Parties shall also serve one copy with Qualex International, Portals II, 445 12th Street, SW., Room CY–B402, Washington, DC 20554, (202) 863–2893, or via e-mail to *qualexint@aol.com*. The original petitions for reconsideration and clarification filed by the parties in

CC Docket Nos. 96–262, 94–1, 98–157, and CCB/CPD File No. 98–63 are available for public inspection and copying during business hours at the FCC Reference Information Center, Portals II, 445 12th Street, SW., Room CY-A257, Washington, DC 20554. The documents may also be purchased from Qualex International, telephone (202) 863–2893, facsimile (202) 863–2898. This document may also be purchased from Qualex International and is available via the Internet at *http://hraunfoss.fcc.gov/edocs_public/attachmatch/DA–03–3961A1.pdf.*

Synopsis

1. The Commission on January 8, 2004, released a Public Notice that seeks to refresh the record in the 1999 Access Reform Docket. In this docket, the Commission on August 27, 1999 released the *Access Reform Fifth Report and Order,* published at 64 FR 60122 (November 4, 1999) in CC Docket Nos. 96–262, 94–1, 98–157, and CCB/CPD File No. 98–63, FCC 99–206. This order established a framework for granting greater pricing flexibility for price cap carriers as competition develops. Bell Atlantic, GTE, Access Solutions Corporation, and the United States Telephone Association subsequently filed petitions for reconsideration and clarification of that order.

2. Since then, the Commission has received and granted a number of petitions seeking pricing flexibility. In addition, AT&T recently asked the Commission to revisit pricing flexibility issues, and parties have responded by filing extensive comments.

3. Because the petitions for reconsideration and clarification were filed several years ago, the intervening developments and passage of time may have rendered the records developed by those petitions stale. Issues raised in the pending petitions may have become moot or irrelevant. As a result, it is not clear what issues arising out of the *Access Reform Fifth Report and Order,* if any, remain in dispute.

4. For these reasons, the Commission requests that parties that filed petitions for reconsideration and clarification of the *Access Reform Fifth Report and Order* now file a supplemental notice indicating those issues that they still wish to be reconsidered or clarified. These parties may refresh the record with any new information or arguments that they believe to be relevant to deciding only those issues that they previously raised in their petitions for reconsideration and clarification. To the extent that these parties do not indicate an intent to pursue these petitions, the Commission will deem them withdrawn and will dismiss them.

Federal Communications Commission.

Tamara Preiss,

Division Chief, Pricing Policy Division, Wireline Competition Bureau.

[FR Doc. 04–1195 Filed 1–20–04; 8:45 am]

BILLING CODE 6712–01–P

FEDERAL COMMUNICATIONS COMMISSION

47 CFR Part 15

[ET Docket No. 03–327; FCC 03–289]

Interference Temperature Operation

AGENCY: Federal Communications Commission.

ACTION: Proposed rule.

SUMMARY: This document proposes a new interference temperature model for quantifying and managing interference. This new concept could shift the current method for assessing interference, basing it on the actual radio frequency environment. The Notice of Inquiry requests comment, information and research on a number of issues relating to the development and use of the interference temperature metric and for managing a transition from the current transmitter-based approach to the new interference temperature paradigm. The Notice of Proposed Rule Making proposes technical rules that would establish interference temperature limits and procedures for assessing the interference temperature to permit expanded unlicensed operation in the 6525–6700 MHz and 12.75–13.25 GHz bands.

DATES: Comments must be filed on or before April 5, 2004, and reply comments must be filed on or before May 5, 2004.

FOR FURTHER INFORMATION CONTACT: Gary Thayer, (202) 418–2290, John Reed, (202) 418–2455, or Ahmed Lahjouji, (202) 418–2061, Office of Engineering and Technology.

SUPPLEMENTARY INFORMATION: This is a summary of the Commission's *Notice of Inquiry and Notice of Proposed Rule Making,* FCC 03–289, adopted November 13, 2003, and released November 28, 2003. The full text of this document is available for inspection and copying during regular business hours in the FCC Reference Center (Room CY–A257), 445 12th Street, SW., Washington, DC 20554. The complete text of this document also may be purchased from the Commission's copy contractor, Natek, Inc., 236 Massachusetts Avenue, NE., Suite 110, Washington, DC 20002. The full text may also be downloaded at: *www.fcc.gov.* Alternative formats are available to persons with disabilities by contacting Brian Millin at (202) 418–7426 or TTY (202) 418–7365.

Pursuant to §§ 1.415 or 1.419 of the Commission's rules, 47 CFR 1.415, 1.419, interested parties may file comments on before April 5, 2004, and reply comments on or before May 5, 2004. Comments may be filed using the Commission's Electronic Comment Filing System (ECFS) or by filing paper copies. *See Electronic Filing of Documents in Rulemaking Proceedings,* 63 FR 24,121 (1998).

Comments filed through the ECFS can be sent as an electronic file via the Internet at *http://www.fcc.gov/e-file/ecfs.html.* Generally, only one copy of an electronic submission must be filed. If multiple docket or rulemaking numbers appear in the caption of this proceeding, however, commenters must transmit one electronic copy of the comments to each docket or rulemaking number referenced in the caption. In completing the transmittal screen, commenters should include their full name, Postal Service mailing address, and the applicable docket or rulemaking number. Parties may also submit an electronic comment by Internet e-mail. To get filing instructions for e-mail comments, commenters should send an e-mail to *ecfs@fcc.gov*, and should include the following words in the body of the message, ''get form <your e-mail address>.'' A sample form and directions will be sent in reply. Parties who choose to file by paper must file an original and four copies of each filing. If more than one docket or rulemaking number appears in the caption of this proceeding, commenters must submit two additional copies for each additional docket or rulemaking number.

All filings must be sent to the Commission's Secretary, Marlene H. Dortch, Office of the Secretary, Federal Communications Commission, The Portals, 445 Twelfth Street, SW., Washington, DC 20554. Filings can be sent by hand or messenger delivery, by commercial overnight courier, or by first-class or overnight U.S. Postal Service mail (although we continue to experience delays in receiving U.S. Postal Service mail). The Commission's contractor, Natek, Inc., will receive hand-delivered or messenger-delivered paper filings for the Commission's Secretary at 236 Massachusetts Avenue, NE., Suite 110, Washington, DC 20002. The filing hours at this location are 8 a.m. to 7 p.m. All hand deliveries must be held together with rubber bands or

fasteners. Any envelopes must be disposed of before entering the building. Commercial overnight mail (other than U.S. Postal Service Express Mail and Priority Mail) must be sent to 9300 East Hampton Drive, Capitol Heights, MD 20743. U.S. Postal Service first-class mail, Express Mail, and Priority Mail should be addressed to 445 12th Street, SW., Washington, DC 20554. All filings must be addressed to the Commission's Secretary, Marlene H. Dortch, Office of the Secretary, Federal Communications Commission.

Parties who choose to file by paper should also submit their comments on diskette. Such a submission should be on a 3.5-inch diskette formatted in an IBM compatible format using Microsoft Word or compatible software. The diskette should be accompanied by a cover letter and should be submitted in ''read only'' mode. The diskette should be clearly labeled with the commenter's name, proceeding (including the lead docket number, type of pleading (comment or reply comment), date of submission, and the name of the electronic file on the diskette). The label should also include the following phrase ''Disk Copy—Not an Original.'' Each diskette should contain only party's pleading, preferably in a single electronic file. In addition, commenters must send diskette copies to the Commission's copy contractor, Qualex International, Portals II, 445 12th Street, SW., Room CY–B402, Washington, DC 20554.

Summary of Notice of Inquiry and Notice of Proposed Rulemaking

1. The interference temperature concepts introduced in this proceeding were initially developed as part of the Commission's Spectrum Policy Task Force's (Task Force) work on means for improving the management of the radio spectrum to increase the public benefits derived from use of the spectrum resource. In its Report, the Task Force observed that interference management has become more difficult because of the greater density, mobility, and variability of RF transmitters and because users have been granted increased flexibility in using the spectrum. The Task Force presented several recommendations for improving interference management in this changed environment, one of which was for the Commission, as a long term strategy, to shift its paradigm for assessing interference towards an approach that uses real-time adaptation based on actual RF environments, and in particular to adopt a new ''interference temperature'' metric to quantify and manage interference. The Commission's Technical Advisory Committee concluded that introduction of the interference temperature concept is a reasonable approach to defining harmful interference as a function of how the spectrum is actually being used and the designs and margins of particular receivers.

2. In the Notice of Inquiry (Inquiry) phase of this proceeding, the Commission requests comment, information, and research on a number of issues relating to the development and use of the interference temperature metric and for managing a possible transition from the current transmitter-based approach for interference management to the new interference temperature paradigm. In particular, it poses questions concerning the development of the interference temperature metric, including the determination of interference temperature limits for specific frequency bands, and an assessment of the cumulative noise and interference environment in radiofrequency bands, including standard methodologies for making assessments, to support the selection of those limits. It also requests responses on issues concerning the process that would be involved in possible transitioning to the new interference control methods in the various frequency bands.

3. A general implementation of the interference temperature approach would involve planning, study of existing RF noise and interference levels and other factors, and transition processes that would take a substantial amount of time to complete. The Commission seeks comment on several steps it could possibly take prior to a general implementation that would bring elements of this new paradigm into use in the near term and thereby provide a test bed for this model that can be studied and evaluated before any broader implementation is considered. Therefore, in the Notice of Proposed Rule Making (NPRM) phase, the Commission seeks comment on technical rules that would establish interference temperature limits and procedures for assessing the interference temperature in specific frequency bands used by fixed satellite uplinks and by terrestrial fixed point-to-point links. It seeks comment on whether the operating circumstances of these facilities will allow for simple and reliable measurement of the interference temperature at a variety of receive sites under diverse situations and circumstances and whether unlicensed devices should be allowed to operate at higher power levels than currently allowed by the rules, so long as they do not cause the interference temperature to exceed the established limits.

4. *Notice of Inquiry.* For purposes of this new interference management paradigm, interference temperature is defined as a measure of the RF power generated by undesired emitters plus noise sources that are present in a receiver system (I+N) per unit of bandwidth. More specifically, it is the temperature equivalent of this power measured in units of ''Kelvin'' (K). In principle, interference temperature measurements would be taken at various receiver locations and these measurements would be combined to estimate the real-time condition of the RF environment. For an interference temperature limit to function effectively on an adaptive or real-time basis, a system would be needed to measure the interference temperature in the band and communicate that information to devices subject to the limit, and a response process would also be needed to restrict the operation of devices so as to maintain the interference temperature at or below the level of the limit. The process could take place within an individual device; at the receive sites of a licensed service where the temperature is measured and communicated to a central site, where the interference temperature profile for the region would be computed; or through a grid of monitoring stations that would continuously examine the RF energy levels in specified bands, process that data to derive interference temperatures, and then broadcast that data to subject transmitters on a dedicated frequency, again perhaps with instructions how to respond.

5. There are several actions that could be taken in the event that a device determines that its transmissions would cause the interference temperature limit to be exceeded. One approach would be to select a different transmitting frequency or, if none were available, to cease transmitting until the RF environment changed to a state in which a transmission would no longer cause an unacceptable temperature level. Another approach would be to reduce the transmitter power and/or change the direction or shape of the transmit antenna pattern. These capabilities could be implemented by equipping devices with technology such as automatic transmitter power control (ATPC) or with the ability to electrically re-shape antenna patterns. Combining these approaches, a single device could be designed to scan the range of potential operating frequencies before transmitting, compute an estimate of the amount that their operation would add to the interference temperature on each

frequency, and select among the frequencies that would allow compliant operation. The device would monitor the interference temperature and if the observed level began approaching or exceeded the limit, could lower its power, switch to another frequency, make an antenna adjustment, or cease transmitting as conditions might warrant.

6. The Commission inquires as to the potential costs and benefits of a policy establishing an interference temperature. In particular, it seeks comment on the likely costs and benefits to licensees, equipment manufacturers and other potentially affected entities that could result from the use of the interference temperature approach or other interference management tools. How would the costs and benefits of an interference temperature approach compare to the costs and benefits under the Commission's current spectrum policy? In addition, it seeks comment on whether and how the interference temperature approach could change the current legal framework, regulatory process and general enforcement of rules designed to prevent harmful interference. The Commission recognizes that this new approach to interference management could also present issues of competing rights and interests. However, the Task Force Report suggested that clearly defined rights and responsibilities for all spectrum users, particularly with respect to interference and interference protection, should be considered and established to the extent possible and practical. Comment is sought as to how the Commission can accomplish this objective and avoid long, drawn out interference disputes without detrimentally affecting reasonable expectations of all interested parties, including expectations regarding the Commission's use of its authority to impose conditions, modify licenses and take other steps to promote greater access to, and more efficient use of, the spectrum.

7. Interested parties are invited to submit suggestions for enhancing or modifying the general plan presented above or for alternative approaches. Noting that the Spectrum Task Force indicated that this approach may not be feasible in all bands, commenters are also encouraged to present plans that would tailor interference temperature to specific services. Comment and suggestions also are requested on how to implement such a plan so as to maximize the benefits for all parties, that is, to protect licensees from interference, provide meaningful benchmark information for equipment and system designers/manufacturers, and opportunities for new operations, including those of unlicensed devices. Commenting parties are also asked to submit information, to the extent it may be available, on the value of these benefits to the respective affected parties. Comment is requested on how this concept could be used to promote more efficient provision of service on a licensed basis and how this should be done. More specifically, how could this approach be used with licensing approaches that make spectrum available on (1) an exclusive basis and (2) a coordinated (shared) basis? Also, what approaches would best allow the Commission to transition to spectrum management by the interference concept in existing occupied spectrum bands? Is there is a general metric that can be used to gauge the success of the introduction of the interference temperature devices into a new frequency band? Is there a simple metric that can be used to gauge the effect of these unlicensed devices upon the incumbent services? Should the introduction of interference temperature devices be done in stages to ensure that the incumbent services do not suffer undue interference? If the introduction were to be done in stages how should we limit the initial introduction of interference temperature devices to protect the incumbent systems?

8. Comment is requested on what technological factors should be considered in setting interference temperature limits. In general, the Commission expects that licensees would prefer to see the interference temperature limits in the bands they use set low, while manufacturers and users of unlicensed devices would prefer to see these limits set high. In this regard, comment is requested on the following questions:

- What elements should the Commission consider in setting temperature limits for different bands and locations? The Task Force suggested that some of the factors to be considered in setting temperature limits for a band include: (1) The extent of current use; (2) the types of services being offered; (3) the types of licensees (for example, public safety); (4) the criticality of services and their susceptibility to interference; (5) the state of development of technology; and (6) the propagation characteristics of the band. Comment is requested on whether these factors are appropriate as well as whether other criteria also should be addressed.
- In addition, commenters should address what, if any, technical factors (*e.g.*, power, field strength at boundary areas, antenna requirements, etc.) should be considered in determining the interference temperature limits for a given service, frequency band and geographic area.
- What applications are expected to be filled by unlicensed devices operating under the interference temperature metric?
- Should factors not specified by the Commission's rules, such as typical modulation types for a given service, be considered? If so, commenters should identify these factors and the rationale for including them.
- How should the factors identified be used to determine interference temperature limits? That is, should each factor be considered equally or are some more important than others? Can an equation be developed that uses the identified factors to calculate a temperature?
- Should all the identified factors be used in all cases? Should some factors only be used in some cases? Commenters should provide detailed explanations for including or excluding specific factors in various analyses.
- In bands where several services share the spectrum on a primary or secondary basis, should the interference temperature limit be based on all the licensed services or only on the service most susceptible to interference? How would this be determined? Is the I+N of a primary service meaningful to a secondary service?
- Are there minimum receiver performance criteria that should be considered as a reference in setting interference temperature limits? If so, how should the specifications for such a reference receiver be developed? Or should the Commission use the worst receiver available for a service, or an average receiver, in determining temperature limits? How would such a receiver be identified?
- To what extent should noise and emissions from existing licensed and unlicensed transmitters be a factor in setting interference temperature limits? Should the highest current level of I+N be used as a minimum meaningful level for the interference temperature limit or some other statistical representation of measured values?
- What entities should be parties to the process of setting interference temperature limits? What process should these entities follow in determining the temperature limit for a specific band (*e.g.*, each entity gets an equal vote, some entities' votes have more weight than others, etc.)?
- Should the Commission allow private agreements between licensed

and unlicensed users to set interference temperature limits for specific bands and frequencies? If so, are there incentives the Commission could/should provide to licensees to increase the temperature limit over that set by the Commission?

• How often should interference temperature limits be reviewed?

• What processes should the Commission establish for modifying interference temperature limits? In such cases, what criteria should the Commission consider, how should it weigh those criteria, and who should be parties to modification processes?

• Are there some services or bands for which the Commission should continue to use the current interference protection procedures?

9. Comment also is requested on the approaches to be used for measuring interference temperature on a real-time basis and, in the case of temperatures derived from measurements at multiple sites, communicating that information to devices that are required to protect the limit. In this regard, commenting parties are asked to address these questions and issues:

• How should the Commission decide on the type of interference temperature monitoring to be required to provide real-time interference control? Commenters should identify the costs and benefits of the three monitoring approaches discussed above and how they relate to different services. Commenters are also encouraged to identify other monitoring approaches.

• Should certain monitoring schemes be specified for certain services? Or should this be solely up to the incumbent licensees?

• How would monitoring systems be funded and who would be responsible for their establishment, operation, and maintenance? Commenters should consider vendors or operators of unlicensed devices and network services, users of such equipment and services, and perhaps licensees.

• What principles/criteria would be used to choose the location of monitoring sites?

• How often should the spectrum be monitored? How large a band should be monitored? How should monitoring differ with the type of incumbent services present in a band? What bandwidth should be used for monitoring (*e.g.*, should measurements be taken with a resolution bandwidth of 1 megahertz)?

• What detection functions, *e.g.*, root mean squared (RMS), peak or average, should be applied in performing noise measurements? What integration or averaging time should be employed with these measurements? What measurement bandwidths are appropriate?

• How would the information from monitoring sites be used to determine real-time interference temperature values for a specific band in a given geographic area and whether established limits were exceeded?

• What spectrum resources should be used to convey monitored temperature information to devices subject to temperature limits? Should dedicated frequencies be used for this purpose?

10. Comment is requested on the actions that devices subject to compliance with interference temperature limits should take if the applicable interference temperature limit is exceeded. In particular, the Commission seeks comment on the state of development of sensory and control equipment that could appropriately govern the action of emitters in response to real-time interference temperature data, *e.g.*, automatic transmitter power control systems. In addressing the following questions, commenters should seek to balance the requirement that the temperature limits are not exceeded against the need for devices to maintain communications.

• What response should a device take if it determines that exceeding an established interference noise temperature limit, *e.g.*, change frequency, reduce power or place itself in a stand-by mode? Should this response be different if the offending device is a stand-alone device or a device designed to respond to a monitoring system?

• Should a graduated response system be used (*i.e.*, should a device iteratively take measures to bring the interference temperature back into the compliant range or should the strongest measures be taken first)?

• If many devices are operating, is it possible to assign responsibility to specific devices if the temperature limit is exceeded and have those devices take measures to ensure that the temperature is brought back to a compliant level?

• Once an offending device takes measures to bring the temperature back to a compliant level, what protocols should be used to determine when that device may resume operating?

• How should noise temperature limits be enforced? Has technology progressed to the level that the limits could be self-enforced by the radio emitters?

11. *Noise floor measurements.* Comment is requested on how to define the noise floor and whether there are considerations that would justify using slightly different definitions for different bands and/or services. Comment, information, and research also are requested on the levels of the noise floor in the various frequency bands and how those levels vary over time and across geographic regions. While noise floor information is useful in administering our interference temperature limits, the Commission also recognizes that measuring and monitoring the noise floor is a substantial, time-consuming, and, in most cases, resource intensive undertaking. It therefore requests comment and suggestions for methods to collect this information on a timely, cost effective basis or to develop acceptable estimates of this information from methods other than continuous direct measurement and monitoring. It further requests comment and suggestions for standard methodologies for collecting and estimating reliable noise floor data that would be consistent with obtaining this data on a timely and cost effective basis. Commenters should be specific regarding the techniques used to measure the noise floor (*e.g.*, providing information regarding spectrum analyzer settings, amount of time monitored, location, etc.)

12. *Determining Harmful Interference.* More generally, interference can be characterized as an emission from a transmitter that impedes reception of a desired signal to a given recipient. However, as noted above, interference is only considered harmful if it rises to a certain level. In this context, the Commission asks commenters to address the following questions:

• For a given service in a given frequency band, how much interference can be tolerated before it is considered harmful? If the determination of harmful interference would be based on specific quality of service levels, the Commission requests comment on the rationale used to justify the recommended constraints. The commenting parties should note the specific frequency bands and services to which their comments apply.

• When performing interference studies, what assumptions should be made regarding operating scenarios? For example, commenters should address the duty cycle to be assumed for the desired and undesired transmitters. What assumptions should be made about whether and/or what percentage of antennas might be aligned under typical operating conditions such that there is main beam coupling between undesired transmitters and desired receivers?

• Can interference from a transmitter be distinguished from naturally occurring noise?

• Can a statistical approach to developing temperature limits be developed? If so, what parameters need to be developed? How would such an approach be applied?

• Should the interference temperature limit be set at level that quantifies ''harmful interference'' or some other benchmark, or ''safe-harbor'' level that would constitute less than harmful interference?

13. *Notice of Proposed Rule Making.* The Commission also seeks comment on whether it may be feasible and desirable to begin the process of introducing the interference temperature approach on a limited basis now in selected bands, even as it begins the study and development activities that will support the more general implementation of this new paradigm. In this regard, it seeks comment on if it is possible to first introduce the interference temperature concept on a limited basis without full implementation of real-time monitoring of the interference temperature or feedback control of transmitters and prior to completion of our studies of the noise floor. The approach used in this first step would establish an ''interference temperature'' or equivalent metric based upon the communications margins needed by the existing licensed operations and apply restrictions on unlicensed devices that would minimize the likelihood that their operation would result in an increase in interference temperature that could exceed the necessary operating margin of the licensed services. The proposed restrictions on unlicensed devices would include limiting the transmitter output power and requirements to use transmit power control (TPC) and dynamic frequency selection (DFS). In addition, other requirements that might prove beneficial could include limits on the number of unlicensed devices, as well as duty cycle restrictions that would insure that these initial interference temperature experiments do not cause harmful interference to licensed services. As noted, the Commission seeks comment on how these first steps could provide additional opportunities for operation of unlicensed devices and, perhaps more importantly, provide valuable information and experience to guide our formulation of approaches in the next phases of this effort.

14. The Commission proposes to apply the new interference temperature approach described herein to unlicensed operation within the fixed (FS) and fixed satellite service (FSS) uplink band at 6525–6700 MHz and the FS, FSS, and BAS/CARS band at 12.75–13.25 GHz (excluding 13.15–13.2125 GHz). These bands were chosen because the Commission believes they offer the possibility to implement in a simplified way the interference temperature concept and approach. Comment is sought on the appropriateness of these bands and whether additional frequency bands could be suitable for testing the concept of interference temperature.

15. The Commission believes that it is beneficial to look at frequencies where FSS satellite uplinks are the predominant use. In those instances, the licensed receiver being protected is located on the satellite in space. Consequently, the receiver would not be located in close proximity to any potentially interfering unlicensed device. Given the significant distances involved and the typical satellite antenna characteristics, the satellite receiver would ''see'' the cumulative effect of the RF signals from all unlicensed devices on the ground. Therefore, it is possible to develop a simplified interference temperature approach for the satellite receiver and FSS uplink operations by aggregating the interference contributions of a large number of unlicensed devices over a wide geographic area. Interference temperature is a measure of the RF power generated by undesired emitters plus noise sources that are present at the input of a receiver system (I+N) per unit of bandwidth. Since a satellite-based receiver will generally ''see'' large geographic areas of the CONUS, it is possible to analytically aggregate the impact of a large number of unlicensed devices on the $\Delta T/T$ criterion. The Commission's preliminary analysis indicates that a large number of unlicensed devices, over 53 million in the 6525–6700 MHz band and over 369 million in the 12.75–13.25 GHz band, operating with EIRP emission levels possibly as high as 30 dBm to 36 dBm (1 W to 4 W) could be accommodated without exceeding a reasonable $\Delta T/T$ ''interference temperature'' threshold that might be established for FSS systems. Comment is sought on an appropriate interference temperature threshold that will afford sufficient protection to licensed satellite operations, and in particular on whether the 5% value used in the calculations, or another value of $\Delta T/T$, for example 3% or 1%, would be more appropriate as well as on the various assumptions made in the link budget analyses, particularly concerning the power emission distributions and other technical characteristics of hypothetical unlicensed operations in the band. If commenters believe that the analysis is flawed or should be conducted differently or by using different assumptions, detailed technical explanations and accompanying analysis should be submitted to support these claims.

16. The Commission also believes that bands used for certain terrestrial fixed operations would be suitable for our first-step implementation of the interference temperature concept. The key simplifying benefit of dealing with fixed operations is the fact that such operations are generally static and well-defined such that reasonable assumptions can be made about their locations and technical characteristics. In these bands, fluctuations in the interference temperature can be compared to fluctuations in C/(I+N) or (S/I). Once a value for the interference threshold of a typical licensed receiver is established through consideration of the required signal margins, it is possible to utilize a measurement of the ambient fixed signal levels to determine whether operation of an unlicensed device of known characteristics would exceed the ''interference temperature'' signal threshold for a licensed receiver. This transmit/not transmit decision could be made in real-time by unlicensed devices that incorporate DFS. As implemented here, the DFS threshold of an unlicensed device would be adjusted so that the device would not transmit if the detected fixed signal level exceeds an established threshold. In this manner, the DFS threshold is functionally equivalent to the interference temperature limit. Consequently, the transmit/not transmit decision made by the DFS feature ensures that the S/I or other chosen metric for licensed receivers is not adversely impacted. Based on conservative assumptions, the Commission calculates that an unlicensed emitter 100 meters away from a 6525–6700 MHz FS receiver should be able to transmit at a power level of as much as much as 91 dB to 71 dB higher than the level it receives from an FS transmitter without causing harmful interference to the associated FS receiver. Similarly, an unlicensed emitter 100 meters away from a 12.75–13.25 GHz FS receiver should be able to transmit with a power level of as much as 95 dB to 75 dB higher than that received from the FS transmitter without causing harmful interference to the associated FS receiver. These values could be useful in determining the sensitivity of the DFS used with the unlicensed system and seek comment in that regard. Comment is requested on the parameters used in these calculations and whether other

approaches could be used to derive appropriate values for an interference temperature limit in these bands.

17. If unlicensed devices were designed to first monitor (*e.g.*, listen-before-talk, or ''sniff'') the authorized spectrum to determine the levels of existing RF emissions, they could employ DFS to adjust their frequency of operation to ensure that operation occurs on unoccupied channels. The detection threshold employed within the DFS could be adjusted to accommodate the overhead margins for unlicensed operations calculated above to ensure that the emissions from the unlicensed emitter do not exceed the interference threshold at the fixed receiver. Comment is sought on requiring a minimum DFS detection threshold of −64 dBm for unlicensed devices operating at output levels equal to or exceeding 23 dBm and −62 dBm for unlicensed devices operating at output levels below 23 dBm. It is proposed that the detection threshold is the received power averaged over 1 millisecond referenced to a 0 dBi antenna. Comment is sought on the merits of and potential problems that might arise from using this real-time monitoring approach. Comments are also sought on alternative methods that could be employed to monitor the RF spectrum signal levels and to control the interference temperature. Should the threshold be referenced to the received power averaged over one millisecond referenced to a 0 dBi antenna? Or should some other reference be used? Detailed technical comments should be submitted to support commenters' positions. Comments also are requested on the bandwidth and time period over which the spectrum should be monitored prior to operation. Also, commenters should provide details regarding how often the spectrum should be monitored after transmission begins. The Commission also requests comment on whether the TPC capability should be required to reduce power by more than 6 dB below the maximum power? If so, to what level? What are the limits of current technology for TPC?

18. The Commission envisions the maximum unlicensed EIRPs in the range of 30 dBm to 36 dBm and believes that sharing between unlicensed devices and these incumbent systems is feasible. It observes that these systems have been able to share in the past by conducting frequency coordination prior to operation. The use of TPC and DFS can automatically mimic this function, but in real time as opposed to manual human coordination activities. The Commission also proposes that unlicensed operations in these bands comply with an undesirable emission limit such as that set forth in § 15.407(b)(1) of the rules which requires that out-of-band emissions not exceed an EIRP of −27 dBm/MHz. Based on its experience with this emission level for UNII operation, the Commission seeks comment on whether a similar requirement will be beneficial when applied to the out-of-band emissions of unlicensed operations in the 6525–6700 MHz and 12.75–13.25 GHz bands. Comment is requested on whether the nature and value of the emission limit we propose herein would be appropriate. Commenters should discuss whether other out-of-band emission limits should be considered as well and whether additional limits should be specified immediately outside of the operating channel. For example, commenters might wish to address whether another single value limit, or alternatively, multiple value limits graduated by frequency offset would be more appropriate.

19. *Satellite Monitoring of Spectrum Occupancy.* It could be possible for satellites to monitor and make available real-time measured data such as ΔT/T, I/N, C/I, C/(I+N) and I that could then be used by individual devices to adjust their operation to ensure that they do not interfere with other licensed operations. This capability would appear to be feasible since satellites are already being used for real-time, remote monitoring of geophysical, meteorological and environmental conditions on the surface of the earth. Comment is requested on the utility and potential benefits of such a real-time monitoring approach in the two bands discussed, as well as in any other bands where the interference temperature concept could be applied. Comment is requested on how the monitored information could be acquired by unlicensed devices. For example, the information might be provided via broadcast signals (possibly through a subscription service) or other means. One possibility could be that unlicensed equipment operating in this manner would consist of systems controlled by centralized transmitting stations that relay this information. More generally, commenters should indicate whether they believe there is interest in such a system and specify how they envision such a system might work. Comment also is requested on the state of current technology and whether such a system is technically feasible today. If such a system were to exist, what data should be provided to unlicensed devices? Who should operate such a system?

Initial Regulatory Flexibility Analysis

20. *Initial Regulatory Flexibility Analysis:* As required by the Regulatory Flexibility Act,[1] the Commission has prepared this Initial Regulatory Flexibility Analysis (IRFA) of the possible significant economic impact on small entities by the policies and rules proposed in this Notice of Proposed Rule Making (''NPRM''). Written public comments are requested on the IRFA. Comments must be identified as responses to the IRFA and must be filed by the deadlines for comments on the NPRM provided in paragraph 54 of the NOI/NPRM. The Commission shall send a copy of this NOI/NPRM, including the IRFA, to the Chief Counsel for Advocacy of the Small Business Administration.[2]

A. Need for, and Objectives of, the Proposed Rules

21. This rulemaking proposal is initiated to obtain comments regarding proposed changes to the regulations for radio frequency devices that do not require a license to operate. The Commission seeks to determine if its standards should be amended to permit the expanded operation of unlicensed devices in the 6525–6700 MHz and 12.75–13.25 GHz bands. We believe that it may be necessary to shift our current paradigm for assessing interference from approaches based primarily on transmitter operations towards new approaches that focus on the actual RF environment and interaction between transmitters and receivers, such as the interference temperature metric. In order to begin our exploration of the process that would be involved in a transition to an interference temperature regime, we seek comment on specific technical guidelines in the NPRM portion of our discussion that we believe can be implemented in the near future for selected frequency bands prior to any general implementation of interference temperature limits and real-time adaptation of transmitters to the interference temperature environment.

B. Legal Basis

22. The proposed action is taken pursuant to sections 4(i), 301, 302, 303(e), 303(f), 303(r), and 307 of the Communications Act of 1934, as amended, 47 U.S.C. 154(i), 301, 302, 303(e), 303(f), 303(r), and 307.

C. Description and Estimate of the Number of Small Entities to Which the Proposed Rules Will Apply

23. The RFA directs agencies to provide a description of, and where

[1] *See* 5 U.S.C. 603.

[2] 5 U.S.C. 603(a).

feasible, an estimate of the number of small entities that may be affected by the proposed rules, if adopted.[3] The RFA generally defines the term ''small entity'' as having the same meaning as the terms ''small business,'' ''small organization,'' and ''small governmental jurisdiction.''[4] In addition, the term ''small business'' has the same meaning as the term ''small business concern'' under the Small Business Act.[5] A ''small business concern'' is one which: (1) Is independently owned and operated; (2) is not dominant in its field of operation; and (3) satisfies any additional criteria established by the Small Business Administration (SBA).[6] Nationwide, there are approximately 22.4 million small businesses, total, according to the SBA data.[7]

24. A small organization is generally ''any not-for-profit enterprise which is independently owned and operated and is not dominant in its field.''[8] Nationwide, as of 1992, there were approximately 275,801 small organizations.[9] The term ''small governmental jurisdiction'' is defined as ''governments of cities, towns, townships, villages, school districts, or special districts, with a population of less than fifty thousand.''[10] As of 1997, there were about 87,453 governmental jurisdictions in the United States.[11] This number includes 39,044 county governments, municipalities, and townships, of which 37,546 (approximately 96.2%) have populations of fewer than 50,000, and of which 1,498 have populations of 50,000 or more. Thus, we estimate the number of small governmental jurisdictions overall to be 84,098 or fewer.

25. The SBA has developed a small business size standard for wireless firms within the two broad economic census categories of Paging[12] and Cellular and Other Wireless Telecommunications.[13] Under both SBA categories, a wireless business is small if it has 1,500 or fewer employees. For the census category of Paging, Census Bureau data for 1997 show that there were 1320 firms in this category, total, that operated for the entire year.[14] Of this total, 1303 firms had employment of 999 or fewer employees, and an additional 17 firms had employment of 1,000 employees or more.[15] Thus, under this category and associated small business size standard, the majority of firms can be considered small. For the census category Cellular and Other Wireless Telecommunications firms, Census Bureau data for 1997 show that there were 977 firms in this category, total, that operated for the entire year.[16] Of this total, 965 firms had employment of 999 or fewer employees, and an additional 12 firms had employment of 1,000 employees or more.[17] Thus, under this second category and size standard, the majority of firms can, again, be considered small.

26. The SBA has established a small business size standard for Radio and Television Broadcasting and Wireless Communications Equipment Manufacturing. Under this standard, firms are considered small if they 750 or fewer employees.[18] Census Bureau data for 1997 indicate that, for that year, there were a total of 1,215 establishments in this category.[19] Of those, there were 1,150 that had employment under 500, and an additional 37 that had employment of 500 to 999. Thus, under this size standard, the majority of establishments can be considered small.

27. *Satellite Telecommunications.* The SBA has developed a small business size standard for Satellite Telecommunications Carriers, which consists of all such companies having $12.5 million or less in annual receipts.[20] In addition, a second SBA size standard for Other Telecommunications includes ''facilities operationally connected with one or more terrestrial communications systems and capable of transmitting telecommunications to or receiving telecommunications from satellite systems,''[21] and also has a size standard of annual receipts of $12.5 million or less. According to Census Bureau data for 1997, there were 324 firms in the category Satellite Telecommunications, total, that operated for the entire year.[22] Of this total, 273 firms had annual receipts of $5 million to $9,999,999 and an additional 24 firms had annual receipts of $10 million to $24,999,990.[23] Thus, under this size standard, the majority of firms can be considered small. In addition, according to Census Bureau data for 1997, there were 439 firms in the category Satellite Telecommunications, total, that operated for the entire year.[24] Of this total, 424 firms had annual receipts of $5 million to $9,999,999 and an additional 6 firms had annual receipts of $10 million to $24,999,990.[25] Thus, under this second size standard, the majority of firms can be considered small.

28. As no party currently is permitted to market or operate equipment under the proposed standards, there will be no immediate impact on any small entities. The Commission does not have an estimated number for the small entities that may currently be capable of producing such products but believes that there are only a few in existence.

D. Description of Projected Reporting, Recordkeeping and Other Compliance Requirements for Small Entities

29. Part 15 transmitters are already required to be authorized under the Commission's certification procedure as a prerequisite to marketing and importation. The reporting and

[3] 5 U.S.C. 603(b)(3).

[4] 5 U.S.C. 601(6).

[5] 5 U.S.C. 601(3) (incorporating by reference the definition of ''small-business concern'' in the Small Business Act, 15 U.S.C. 632). Pursuant to 5 U.S.C. 601(3), the statutory definition of a small business applies ''unless an agency, after consultation with the Office of Advocacy of the Small Business Administration and after opportunity for public comment, establishes one or more definitions of such term which are appropriate to the activities of the agency and publishes such definition(s) in the **Federal Register**.''

[6] 5 U.S.C. 632.

[7] *See* SBA, *Programs and Services*, SBA Pamphlet No. CO–0028, at pg. 40 (July 2002).

[8] 5 U.S.C. 601(4).

[9] U.S. Department of Commerce, Bureau of the Census, 1992 Economic Census, Table 6 (special tabulation of data under contract to the Office of Advocacy of the U.S. Small Business Administration).

[10] 5 U.S.C. 601(5).

[11] U.S. Census Bureau, Statistical Abstract of the United States: 2000, Section 9, pgs. 299–300, Tables 490 and 492.

[12] 13 CFR 121.201, NAICS code 513321 (changed to 517211 in October 2002).

[13] 13 CFR 121.201, NAICS code 513322 (changed to 517212 in October 2002).

[14] U.S. Census Bureau, 1997 Economic Census, Subject Series: Information, ''Employment Size of Firms Subject to Federal Income Tax: 1997,'' Table 5, NAICS code 513321 (issued Oct. 2000).

[15] *Id.* The census data do not provide a more precise estimate of the number of firms that have employment of 1,500 or fewer employees; the largest category provided is ''Firms with 1,000 employees or more.''

[16] U.S. Census Bureau, 1997 Economic Census, Subject Series: Information, ''Employment Size of Firms Subject to Federal Income Tax: 1997,'' Table 5, NAICS code 513322 (issued Oct. 2000).

[17] *Id.* The census data do not provide a more precise estimate of the number of firms that have employment of 1,500 or fewer employees; the largest category provided is ''Firms with 1,000 employees or more.''

[18] 13 CFR 121.201, NAICS code 334220.

[19] U.S. Census Bureau, 1977 Economic Census, Industry Series: Manufacturing, ''Industry Statistics by Employment Size,'' Table 4, NAICS code 334220 (issued August 1999).

[20] 13 CFR 121.201, North American Industry Classification System (NAICS) code 517410 (formerly 513340).

[21] *Id.* NAICS code 517910 (formerly 513390).

[22] U.S. Census Bureau, 1997 Economic Census, Subject Series: Information, ''Receipt Size of Firms Subject to Federal Income Tax: 1997,'' Table 4, NAICS code 517410 (issued Oct. 2000).

[23] *Id.*

[24] U.S. Census Bureau, 1997 Economic Census, Subject Series: Information, ''Receipt Size of Firms Subject to Federal Income Tax: 1997,'' Table 4, NAICS code 517910 (issued Oct. 2000).

[25] *Id.*

recordkeeping requirements associated with these equipment authorizations would not be changed by the proposals contained in this *NPRM*. These changes to the regulations would permit the introduction of an entirely new category of radio transmitters.

E. Steps Taken To Minimize the Significant Economic Impact on Small Entities, and Significant Alternatives Considered

30. The RFA requires an agency to describe any significant, specifically small business, alternatives that it has considered in reaching its proposed approach, which may include the following four alternatives (among others): ''(1) The establishment of differing compliance or reporting requirements or timetables that take into account the resources available to small entities; (2) the clarification, consolidation, or simplification of compliance and reporting requirements under the rule for such small entities; (3) the use of performance rather than design standards; and (4) an exemption from coverage of the rule, or any part thereof, for such small entities.'' [26]

31. As noted, in order to begin our exploration of the process that would be involved in a transition to an interference temperature regime, we seek comment on specific technical guidelines in the NPRM portion of our discussion that we believe can be implemented in the near future for selected frequency bands prior to any general implementation of interference temperature limits and real-time adaptation of transmitters to the interference temperature environment. Currently, no party is permitted to market or operate equipment under the proposed standards, so there will be no immediate impact on any small entities. One alternative to our proposal is reflected in our request for comments on whether it is necessary to preclude expanded unlicensed operation in the 650–6675.2 MHz band to protect radio astronomy operations or whether suitable technical standards can be developed to ensure that interference is not caused. We invite small entities to comment on this alternative.

F. Federal Rules That May Duplicate, Overlap, or Conflict With the Proposed Rule

32. None.

33. The proposed action is authorized under sections 4(i), 301, 302a, 303(e), 303(f), 303(r) and 307 of the Communications Act of 1934, as amended, 47 U.S.C. 154(i), 301, 302, 303(e), 303(f), 303(r) and 307.

Federal Communications Commission.

Marlene H. Dortch,

Secretary.

[FR Doc. 04–1192 Filed 1–20–04; 8:45 am]

BILLING CODE 6712–01–P

[26] 5 U.S.C. 603(c)(1)–(c)(4).

DEPARTMENT OF COMMERCE

National Oceanic and Atmospheric Administration

50 CFR Part 648

[Docket No. 040109009–4009–01; I.D. 121803D]

RIN 0648–AR79

Fisheries of the Northeastern United States; Recordkeeping and Reporting Requirements; Regulatory Amendment to Modify Seafood Dealer Reporting Requirements

AGENCY: National Marine Fisheries Service (NMFS), National Oceanic and Atmospheric Administration (NOAA), Commerce.

ACTION: Proposed rule; request for comments.

SUMMARY: NMFS proposes measures contained in a regulatory amendment to modify the existing reporting and recordkeeping regulations for federally permitted seafood dealers participating in the summer flounder, scup, black sea bass, Atlantic sea scallop, Northeast (NE) multispecies, monkfish, Atlantic mackerel, squid, butterfish, Atlantic surfclam, ocean quahog, Atlantic herring, Atlantic deep-sea red crab, tilefish, Atlantic bluefish, skates, and/or spiny dogfish fisheries in the NE Region. The purpose of this action is to improve monitoring of commercial landings by collecting more timely and accurate data, enhance enforceability of the existing regulations, promote compliance with existing regulations, and ensure consistency in reporting requirements among fisheries. This action would require daily electronic reporting of all fish purchases by federally permitted dealers; eliminate dealer reporting via the Interactive Voice Response (IVR) system; implement a trip identifier requirement for dealers; require dealers to report the disposition of fish purchased; and modify the dealer reporting requirements for the surfclam and ocean quahog fisheries to make them consistent with the requirements of other fisheries.

DATES: Comments on this proposed rule must be received on or before February 20, 2004.

ADDRESSES: Copies of the regulatory amendment, its Regulatory Impact Review (RIR), the Initial Regulatory Flexibility Analysis (IRFA), and other supporting materials are available from Patricia A. Kurkul, Regional Administrator, Northeast Region, NMFS, One Blackburn Drive, Gloucester, MA 01930. The regulatory amendment/RIR/IRFA is also accessible via the Internet at *http:www.nero.nmfs.gov*. Written comments on the proposed rule should be sent to the address above. Mark the outside of the envelope, ''Comments on Proposed Rule for Dealer Electronic Reporting.'' Comments may also be sent via facsimile (fax) to (978) 281–9135. Comments will not be accepted if submitted via e-mail or the Internet.

Written comments regarding the burden-hour estimates or other aspects of the collection-of-information requirements contained in this proposed rule may be submitted to Patricia A. Kurkul at the above address and by e-mail to *David__Rostker@omb.eop.gov*, or by fax to (202) 395–7285.

FOR FURTHER INFORMATION CONTACT: Michael Pentony, Senior Fishery Policy Analyst, (978)281–9283, fax (978)281–9135, email *Michael.Pentony@noaa.gov*.

SUPPLEMENTARY INFORMATION:

Background

Regulations implementing the fishery management plans (FMPs) for the summer flounder, scup, black sea bass, Atlantic sea scallop, NE multispecies, monkfish, Atlantic mackerel, squid, butterfish, Atlantic surfclam, ocean quahog, Atlantic herring, Atlantic deep-sea red crab, tilefish, Atlantic bluefish, skates, and spiny dogfish fisheries are found at 50 CFR part 648. These FMPs were prepared under the authority of the Magnuson-Stevens Fishery Conservation and Management Act (Magnuson-Stevens Act). All dealers and vessels issued a Federal permit in the aforementioned fisheries must comply with the reporting requirements outlined at § 648.7. Lobster dealers issued a Federal lobster permit, but not issued any of the permits with mandatory reporting requirements, are not required to comply with these reporting regulations, although other reporting requirements may apply. NMFS is proposing to modify several components of these reporting regulations to simplify reporting requirements, improve data quality and data access, maximize compliance, and improve the information available for

the management of important marine resources.

Dealer Electronic Reporting

The majority of reports submitted by seafood dealers to the NE Regional Office of NMFS are via paper-based forms, with a small percentage submitted using electronic media. Paper-based reports were the preferred method for submitting seafood transaction information in the past. However, with the Internet and high-speed data transfer alternatives available, paper forms are no longer the most efficient method for dealers to submit the required information, nor for NMFS to receive and process it. As more dealers utilize computers, various software business applications, and the Internet as part of their normal business operations, it is an opportune time to take advantage of these technical capabilities to reduce the paper burden on dealers and improve data quality, accessibility, and timeliness.

This proposed rule would require all seafood dealers permitted under § 648.6 to submit, on a daily basis, an electronic report containing the required trip-level information for each purchase of fish made from fishing vessels. Electronic data submission would replace the comprehensive trip-by-trip written reports dealers are required to submit weekly, as well as the weekly landings summary reports submitted through the dealer IVR system for quota-monitored species. Dealers would be required to submit an electronic negative report for each week in which no fish were purchased. As is presently the case for fisheries requiring negative reports, dealers would be allowed to submit negative reports for up to 3 months in advance, if they know that no fish will be purchased during that time.

There would be four mechanisms from which dealers could choose how they submit purchase reports electronically. Because dealers use computer applications to varying degrees, NMFS intends to develop an Internet web site that would enable dealers to transfer information to NMFS via an Internet File Transfer Protocol (FTP) or to enter the data directly into an online form. Dealers without Internet access would have the option of submitting electronic landings report files directly to NMFS via a standard FTP and the phone line. A fourth option would allow dealers to use an acceptable file upload report system implemented by one or more state fishery management agencies. Dealers would receive a user name and personal identification number (PIN) that would enable them to log onto a secure site and submit their reports.

To ensure compatibility with the reporting system and database, seafood dealers would be required to obtain and utilize a personal computer, in working condition, with an Intel Pentium 3–equivalent 300 megahertz or greater processing chip, at least 128 megabytes of random access memory (RAM), a 56,000 baud data/fax modem or cable or DSL modem, Microsoft Internet Explorer version 6.0 (or equivalent) or better, and a monitor with 800 pixel by 600 pixel or better resolution.

Due to the Magnuson-Stevens Act provision that renders fish purchase reports from dealers confidential, information sent from dealers to NMFS in compliance with the electronic reporting requirements would be subject to strict encryption standards and would be available only to authorized agency personnel and the submitter. Dealers would also be allowed to access, review, and edit the information they have submitted, using a secure procedure similar to those in common usage throughout the banking industry. Dealers would be allowed to make corrections to their purchase reports via the electronic editing features for up to 3 days following the initial report. If a correction is needed more than 3 days following the initial report, this extension would only be possible through a direct request to NMFS staff, and may be subject to enforcement action. These submissions would constitute the official reports as required by the various FMPs in the Northeast. No other reporting methods are anticipated at this time.

The electronic submission of dealer landings reports would reduce the paper burden for dealers and result in higher quality and more timely information being available for fishery managers, scientists, and to industry members only in aggregate form that does not identify the submitter or his/her business. In addition, electronic submission would reduce the need for manually processing the reports, thus reducing or eliminating one potential source of errors in these critical reports.

Improved timeliness of landings data makes electronic reporting an especially effective tool for monitoring quota-managed species. For instance, the widespread use of and access to the Internet would enable users to submit information to NMFS near the time the landings actually occurred. The availability of detailed landings information on a near real-time basis would allow NMFS to keep more accurate accountings of landings for quota-managed species and reduce the likelihood of quota overages, as well as early closures of these fisheries. In addition, improvements in the quality, timeliness, and detail of the information provided through electronic reporting would lead to improvements in the precision of landings projections and reduce the uncertainty associated with the current projections. Thus, implementation of electronic reporting would eliminate the need for other quota monitoring systems, such as the dealer IVR system, as landings information at a greater level of detail for all species would be available to NMFS managers on a daily basis. Further, electronic reporting would eliminate duplication of effort for dealers who currently enter purchase information into a computer database for their own business records and also write the same information on a government-issued paper form for submission to NMFS.

At the time most FMPs were developed, electronic reporting was not considered a viable option, nor a priority for the industry or NMFS. However, as technology evolves and the technological capabilities of individuals and small businesses increase, NMFS intends to utilize and accommodate these technological advances.

Changes to the Dealer Submission Schedule

This proposed rule would modify the schedule for the submission of comprehensive trip-by-trip reports by all federally permitted seafood dealers. Currently, detailed reports for all transactions in a reporting week must be postmarked or received by NMFS within 16 days after the end of each reporting week. This action would require all federally permitted seafood dealers to submit daily electronic reports, which would be due within 24 hours after the day of purchase, or midnight of the next business day, whichever is later. NMFS is aware that not all required data elements, such as price and disposition of fish, may be available within this timeframe; therefore, to accommodate this lag in availability, price and disposition information must be submitted within 3 days of the end of the reporting week (by midnight Tuesday of the week after the purchase was made). This would be accomplished through an update procedure in which the dealer would access and update the data submitted for the previous reporting week. Dealers using an FTP submission process would be allowed to submit an updated report and transmit the updated information using a modified FTP process.

Present reporting requirements state that dealers must complete negative reports for months in which no fish were purchased, and that these reports must be submitted within 16 days after the end of the reporting month. Under this proposed rule, dealers would be required to submit a negative report for each week in which no fish were purchased. Negative reports would be due within 3 days of the end of the reporting week (midnight on Tuesday of the following week). As is presently the case, dealers would be allowed to submit negative reports in large blocks ahead of time (up to 3 months) if they know that no fish would be purchased during these times. This would decrease the number of reports required of dealers who can predict periods of inactivity.

For the 2004 calendar year, negative reports would be accepted via hardcopy, as well as via electronic means. Beginning January 1, 2005, all negative reports, as well as purchase reports, would only be accepted via one of the available electronic reporting mechanisms. This means that some federally permitted dealers that would not be making any fish purchases immediately following the implementation of this action would not have to come into full compliance to be able to submit dealer purchase reports via electronic means until they either: (1) Anticipate making a fish purchase from a fishing vessel during the 2004 calendar year; or (2) apply for their 2005 dealer permit renewal. As of the beginning of the 2005 calendar year, any dealer that has not come into compliance with this action and is unable to submit negative and purchase reports via one of the available electronic reporting methods above would not have his/her permit renewed. Said dealer could reapply and obtain a new Federal dealer permit once he/she acquires the capability to submit all required reports electronically.

Quota Monitoring

Quota monitoring of many species, including summer flounder, scup, black sea bass, regulated NE multispecies, Illex squid, Loligo squid, Atlantic bluefish, and spiny dogfish is currently accomplished through the dealer IVR system. Full implementation of electronic reporting under this proposed rule would eliminate the need for the existing dealer IVR system, as landings information pertaining to all species, including quota-monitored species, would be available to NMFS on a daily basis. Dealers would no longer be required to submit weekly landing summary reports or weekly negative reports through the dealer IVR system for quota-monitored species. Vessel owners/operators currently required to report through the IVR system would continue to be required to do so.

Trip Identifier

In order for each fishing trip to be uniquely identifiable and to aid in matching dealer purchase report data with the corresponding vessel log report data, this proposed rule would explicitly define and implement reporting of a trip identifier for each trip from which fish are purchased. The trip identifier requirement would apply to all purchases made by a federally permitted dealer, whether from a federally permitted vessel or not. The trip identifier would be defined as follows: ''Trip identifier'' is the serial number of the vessel logbook page(s) completed for that trip, if applicable, or a combination of the date sailed, specified numerically, and, if the vessel sailed more than once on the same day, the sequential trip number within the date sailed. For example, ''02010302'' would represent a fishing trip that began on February 1, 2003, and was the second trip of that day.

To facilitate the transfer of this information from the vessel to the dealer, the vessel logbook packet would include a page labeled ''dealer copy.'' This page includes the unique serial number for the logbook packet, the vessel name, the USCG document or state registration number, the vessel permit number, and the date/time sailed. The dealer would then record the unique serial number located on his/her copy of the vessel trip report onto the appropriate purchase report before submitting this information via one of the available electronic reporting mechanisms. If more than one vessel logbook is completed for a single fishing trip, only one serial number need be recorded.

Disposition Code

The disposition of seafood products is needed to determine the ultimate fate and use of harvested fish. To ensure the disposition is accurately reflected in the database, this proposed rule would require that all federally permitted dealers report the disposition of any fish that they purchase. Disposition information would include such categories as ''sold as food,'' ''sold for bait,'' and ''not sold.''

Mailing Address

To eliminate duplication of information reported, dealers would no longer be required to record their mailing address on each purchase report. Dealers would continue to be required to provide their current mailing address on the permit application and to notify NMFS of any change in their mailing address.

Changes to Surfclam and Ocean Quahog Dealer Reporting

To eliminate confusion regarding the information required to be submitted by surfclam and ocean quahog dealers and processors, these dealers and processors would no longer be required to report the allocation permit number of the vessel(s) from which they purchase surfclams or ocean quahogs, nor would processors be required to report the size distribution and meat yield per bushel by species.

Annual Processed Products Report

All federally permitted seafood dealers subject to this proposed rule, including surfclam and ocean quahog dealers, would be required to complete all sections of the Annual Processed Products Survey.

In addition to the proposed action, NMFS considered several alternatives, including: (1) Making no changes to the current seafood dealer reporting requirements; (2) voluntary electronic reporting for federally permitted dealers; (3) mandatory electronic reporting for some federally permitted dealers, based on a threshold criterion of $300,000 in annual purchases in at least 1 year between 2000 and 2002; and (4) tiered implementation of mandatory electronic reporting for federally permitted dealers, based on the same threshold criterion. NMFS selected the proposed action from among the other alternatives because it would provide for a substantial improvement in data collection, make purchase report data more readily available, provide for a substantial improvement in the ability of NMFS to monitor landings of quota-managed species, and minimize costs to the Government that would be required if the Government was required to maintain multiple data collection systems, as under all of the other alternatives save the no action alternative.

Classification

This proposed rule has been determined to be not significant for the purposes of E.O. 12866.

NMFS prepared an IRFA, as required by section 603 of the Regulatory Flexibility Act (RFA), that describes the economic impact this proposed rule, if adopted, would have on small entities. A description of the action, why it is being considered, and the legal basis for the action, are contained in the

preamble to this proposed rule and in the SUMMARY. The preamble to this proposed rule also includes descriptions of the proposed, no action, and other alternatives discussed here. This rule does not duplicate, overlap, or conflict with any relevant Federal rules. All dealers that would be impacted by this proposed rulemaking are considered to be small entities; therefore, there would be no disproportionate impacts between large and small entities. A summary of the analysis follows:

The purpose of this regulatory amendment is to improve monitoring of commercial landings by collecting more timely and accurate data, enhance enforceability of the existing regulations, promote compliance with existing regulations, and ensure consistency in reporting requirements among fisheries. The proposed action would impact seafood dealers and processors who make purchases from vessels landing specific species in the NE Region. Dealers are firms who buy product from vessels and then sell directly to restaurants, markets, other dealers, processors, and consumers without substantially altering the product. Processors are firms that buy raw product and produce another product form, which is then sold to markets, restaurants, or consumers. The vast majority of dealers and processors have at least four different permits.

Based on 2002 landings information, it is estimated that approximately 500 dealers and processors would need to comply with the proposed rule. The majority of these dealers and processors are resident in Massachusetts (26 percent), Maine (20 percent), New York (16 percent), and Rhode Island (11 percent). All other coastal states through North Carolina have dealers and processors who would need to comply with the proposed action, and there are companies with dealer licenses who purchased fish in 2002 from as far away as California and Hawaii. However, the value of fish purchased by dealers outside of the NE Region is so small that they may not continue purchasing fish directly from vessels if they are forced to comply with mandatory electronic reporting and do not currently have the capability to report electronically.

During 2001 and 2002, the amount and average values of fish purchased by dealers and processors who would need to comply with the proposed measures was quite variable. Dealers are currently defined such that a cooperative, an auction house, or a fish exchange are all considered as an individual dealer. Many of these types of dealers handle a great volume of purchases from a large number of vessels. At the other extreme, there are single operative dealers who buy predominately one species from a small number of vessels. The economic impacts of electronic reporting would affect these groups in a different manner. For 2001–2002, the average total annual ex-vessel value of product purchased by the lowest 10 percent of dealers was less than $3,000, while the value of the uppermost 10 percent of dealers (those in the 90th percentile) was more than $3,000,000. The median value was $156,629 for all species purchases, while the median value purchased of regulated species was $56,925. However, on a percentage basis, the gap between purchases of regulated and non-regulated species narrows for dealers in the 90th percentile and above.

Based on industry surveys conducted over the past year, NMFS estimates that at least 50 firms have the necessary computer hardware, software, and Internet connections to comply with this proposed rule with no additional cost. It is therefore assumed that as many as 450 firms would need to purchase the hardware and software and obtain an Internet connection. It is very likely that more than 50 currently active dealers have computers and Internet access, but this information is unavailable at this time. While this additional information (the actual number of permitted dealers with computer capability and Internet access) would be useful in the analysis of the potential economic impacts of the proposed action and alternatives, the process to collect this information could not be completed within the timeframe necessary for this action.

Industry costs to comply with the proposed action were calculated by estimating the costs for each firm and then multiplying by the expected number of firms that would need to comply. Costs were separated into initial start-up costs for purchasing the necessary computer hardware and software, and monthly Internet expenses and labor costs. Costs are considered net of the no-action scenario, meaning that they are only considered if they increase (or decrease) costs assumed under the current regulations.

Hardware, software, and training costs are based on prices found during October 2003 for computer systems that would meet the minimum technical requirements necessary to be compatible with the reporting system. Components are priced separately, although lower costs may be found through package deals. Training costs could be higher if employees needed to obtain ''hands-on'' training with an instructor, rather than just purchase educational material. Additionally, start-up costs could be higher if accountants or other professionals were hired to initially set-up the system. Total estimates for the hardware, software, and dial-up Internet service were between $671 and $1,479 per dealer. Dealers who select Digital Subscriber Line (DSL) or Cable Modem connections would face higher costs than those that chose dial-up connections. It is unknown whether all dealers would have these options available (all Internet connection types are not available in all areas at this time), but it would likely add an average of $75 per month ($900 per year) to their costs.

This proposed rule would require all federally permitted dealers to submit daily an electronic report for each purchase of fish made from fishing vessels. Daily electronic data submission would replace the current trip-by-trip written and IVR reports that dealers submit weekly. As stated above, hardware, software, and training costs were estimated to be between $671 and $1,479 per dealer, and it was estimated that 450 dealers would need to make these purchases. The total industry cost was estimated to be between $301,950 and $665,550. Changes in labor costs would impact firms yearly, although over time firms would be able to adjust their business practices and use of inputs to mitigate some of those costs. It is estimated that the additional labor cost per firm would be $98 annually, and that total industry labor costs would increase by $44,100.

Under the no action alternative, there would be no increases in costs to the dealers and no revisions would be made to the existing recordkeeping and reporting requirements. Under the alternative to make daily electronic reporting voluntary, federally permitted dealers would be given the option to report all fish purchases electronically rather than via the present reporting requirements. Dealers that opted to report electronically all purchases on a trip-by-trip basis, as under the proposed action, would be exempt from the regulations requiring weekly hardcopy purchase reports and IVR reports. Dealers that did not opt to utilize electronic reporting would continue to be required to provide weekly hardcopy purchase reports and, if applicable, IVR reports. There is no information available on the number of firms that would voluntarily submit electronic reports. For many of the larger dealers that already have the capability to report electronically, it would undoubtedly make sense for them to participate, as they would not incur any additional costs to do so and may see an overall

decrease in costs by not having to report via the currently required mechanisms. However, many dealers would likely not participate, resulting in an overall lower cost to the industry than the preferred alternative.

The alternative that would use a threshold criterion to determine which dealers must comply with electronic reporting would mandate daily electronic reporting for dealers who purchased $300,000 or more of fish (ex-vessel value) from commercial fishing vessels in at least 1 year between 2000 and 2002. Data show that this alternative would impact approximately 50 percent of the dealers, which translates into an overall industry cost of one-half the cost of the proposed action.

The alternative that would use a threshold criterion to determine when dealers must come into compliance with electronic reporting would mandate electronic reporting for all dealers, but delay implementation by a year for dealers who purchased less than $300,000 worth of fish in all years between 2000 and 2002. This would delay implementation for approximately 50 percent of the dealers. Compared to the proposed action, this alternative would be less costly to industry in present value terms due to the delayed implementation, and assuming that the price of computers and software does not increase.

Collection-of-Information Requirements

This proposed rule contains two collection-of-information requirements, which have been submitted to OMB for approval. The public's reporting burden for the collection-of-information requirements includes the time for reviewing instructions, searching existing data sources, gathering and maintaining the data needed, and completing and reviewing the collection-of-information requirements.

The new and revised reporting requirements and the estimated time for a response are as follows: 8 minutes for a dealer purchase report and 30 minutes for the Annual Processed Products Survey.

Public comment is sought regarding: Whether the proposed collection of information is necessary for the proper performance of the functions of the agency, including whether the information shall have practical utility; the accuracy of the burden estimate; ways to enhance the quality, utility, and clarity of the information to be collected; and ways to minimize the burden of the collection of information, including through the use of automated collection techniques or other forms of information technology. Send comments on these or any other aspects of the collection of information to NMFS and to OMB (see **ADDRESSES**).

Notwithstanding any other provision of law, no person is required to respond to nor shall any person be subject to a penalty for failure to comply with a collection of information subject to the requirements of the PRA unless that collection-of-information displays a currently valid OMB control number.

List of Subjects in 50 CFR Part 648

Fisheries, Fishing, Reporting and recordkeeping requirements.

Dated: January 14, 2004.

John Oliver,

Deputy Assistant Administrator for Operations, National Marine Fisheries Service.

For the reasons set out in the preamble, 50 CFR part 648 is proposed to be amended as follows:

PART 648—FISHERIES OF THE NORTHEASTERN UNITED STATES

1. The authority citation for part 648 continues to read as follows:

Authority: 16 U.S.C. 1801 *et seq.*

2. In § 648.2, a new definition for ''trip identifier'' is added, in alphabetical order, to read as follows:

§ 648.2 Definitions.

* * * * *

Trip Identifier means the serial number of the vessel logbook page(s) completed for that trip, if applicable, or a combination of the date sailed, specified numerically, and, if the vessel sailed more than once on the same day, the sequential trip number within that date sailed.

* * * * *

3. In § 648.7, paragraphs (a), (e), (f)(1), and (f)(3) are revised to read as follows:

§ 648.7 Record keeping and reporting requirements.

(a) *Dealers*—(1) *Detailed daily report.* Federally permitted dealers must submit to the Regional Administrator or to the official designee a detailed daily report, within the time periods specified in paragraph (f) of this section, by one of the available electronic reporting mechanisms approved by NMFS, of all fish purchases. The following information, and any other information required by the Regional Administrator, must be provided in each report:

(i) All dealers issued a dealer permit under this part must provide: Dealer name; dealer permit number; name and permit number or name and hull number (USCG documentation number or state registration number, whichever is applicable) of vessel(s) from which fish are landed or received; trip identifier for each trip from which fish are landed or received; date(s) of purchases; pounds by species (by market category, if applicable, or, if a surfclam or ocean quahog processor or dealer, the number of bushels by species); price per pound by species (by market category, if applicable, or, if a surfclam or ocean quahog processor or dealer, the price per bushel by species) or total value by species (by market category, if applicable); port landed; cage tag numbers (if a surfclam or ocean quahog processor or dealer); disposition of the seafood product; and any other information deemed necessary by the Regional Administrator. If no fish are purchased during a day, no report is required to be submitted. If no fish are purchased during an entire reporting week, a report so stating must be submitted.

(ii) [Reserved]

(iii) *Dealer reporting requirements for skates.* In addition to the requirements under paragraph (a)(1)(i) of this section, dealers shall report the species of skates received. Species of skates shall be identified according to the following categories: Winter skate, little skate, little/winter skate, barndoor skate, smooth skate, thorny skate, clearnose skate, rosette skate, and unclassified skate. NMFS will provide dealers with a skate species identification guide.

(2) *System requirements.* All persons required to submit reports under paragraph (a)(1) of this section are required to have the capability to transmit data over a telephone line using a computer modem. To ensure compatibility with the reporting system and database, dealers are required to obtain and utilize a personal computer, in working condition, that meets the minimum specifications identified by NMFS. The affected public will be notified of the minimum specifications via a letter to all Federal dealer permit holders.

(3) *Annual report.* All persons required to submit reports under paragraph (a)(1) of this section are required to submit the following information on an annual basis, on forms supplied by the Regional Administrator:

(i) All dealers issued a dealer permit under this part must complete all sections of the Annual Processed Products Report for all species of fish that were processed during the previous year. Reports must be submitted to the address supplied by the Regional Administrator.

(ii) Surfclam and ocean quahog processors and dealers whose plant

processing capacities change more than 10 percent during any year shall notify the Regional Administrator in writing within 10 days after the change.

(iii) Atlantic herring processors, including processing vessels, must complete and submit all sections of the Annual Processed Products Report.

* * * * *

(e) *Record retention.* Records upon which purchase reports are based must be retained and be available for immediate review for a total of 3 years after the date of the last entry on the report. Dealers must retain the required records at their principal place of business. Copies of fishing log reports must be kept on board the vessel for at least 1 year and available for review and retained for a total of 3 years after the date of the last entry on the log.

(f) * * *

(1) *Dealer or processor reports.* (i) Detailed daily trip reports, required by paragraph (a)(1)(i) of this section, must be received within 24 hours of a purchase of fish from a fishing vessel, or by midnight of the next business day following the day fish are received from a fishing vessel. Reports of purchases made on a Friday, Saturday, or Sunday must be received by midnight of the following Monday. If no fish are purchased during a reporting week, the report so stating required under paragraph (a)(1)(i) of this section must be received within 3 days after the end of the reporting week, or by midnight on the following Tuesday.

(ii) Dealers who want to make corrections to their purchase reports via the electronic editing features may do so for up to 3 days following submission of the initial report. If a correction is needed more than 3 days following the submission of the initial purchase report, the dealer must contact NMFS directly to request an extension of time to make the correction.

(iii) To accommodate the potential lag in availability of some required data, price and disposition information may be submitted after the initial purchase report, but must be received within 3 days of the end of the reporting week, that is, by midnight on the following Tuesday. Dealers will be able to access an update procedure in which the dealer accesses and updates previously submitted price and disposition data for that reporting week.

(iv) Annual reports for a calendar year must be postmarked or received by February 10 of the following year. Contact the Regional Administrator (see Table 1 to § 600.502) for the address of NMFS Statistics.

* * * * *

(3) *At-sea purchasers, receivers, or processors.* All persons, except persons on Atlantic herring carrier vessels, purchasing, receiving, or processing any Atlantic herring, summer flounder, Atlantic mackerel, squid, butterfish, scup, or black sea bass at sea for landing at any port of the United States must submit information identical to that required by paragraph (a)(1) of this section and provide those reports to the Regional Administrator or designee by the same mechanism and on the same frequency basis.

* * * * *

[FR Doc. 04–1214 Filed 1–15–04; 2:41 pm]

BILLING CODE 3510–22–S

DEPARTMENT OF COMMERCE

National Oceanic and Atmospheric Administration

50 CFR Part 679

[Docket No. 040106005–4005–01; I.D. 121603C]

RIN 0648–AP73

Fisheries of the Exclusive Economic Zone off Alaska; Full Retention of Demersal Shelf Rockfish in the Southeast Outside District of the Gulf of Alaska

AGENCY: National Marine Fisheries Service (NMFS), National Oceanic and Atmospheric Administration (NOAA), Commerce.

ACTION: Proposed rule; request for comments.

SUMMARY: NMFS issues a proposed rule that would require full retention of demersal shelf rockfish (DSR) by certain vessels fishing in the Southeast Outside District (SEO) of the Gulf of Alaska (GOA). This proposed rule would require that the operator of a federally-permitted catcher vessel using hook-and-line or jig gear in the SEO must retain and land all DSR caught while fishing for groundfish or for Pacific halibut under the Individual Fishing Quota program (IFQ) in the SEO. Under existing Federal and State of Alaska regulations, all landed fish must be weighed and reported on State of Alaska fish tickets or, in the case of fish landed in a port outside of Alaska, on equivalent Federal or State documents. Current maximum retainable amounts (MRAs) for DSR in the SEO would be eliminated for catcher vessels but would remain in place for catcher/processors (CPs) in the SEO. This action is necessary to improve estimates of fishing mortality of DSR. This proposed rule is intended to further the goals and objectives of the Magnuson-Stevens Fishery Conservation and Management Act (Magnuson-Stevens Act) and the Fishery Management Plan for Groundfish of the Gulf of Alaska (FMP).

DATES: Comments must be received by February 20, 2004.

ADDRESSES: Comments may be sent to Sue Salveson, Assistant Regional Administrator, Sustainable Fisheries Division, Alaska Region, NMFS, P.O. Box 21668, Juneau, AK 99802, Attn: Lori Durall, or delivered to room 420 of the Federal Building, 709 West 9th Street, Juneau, AK. Comments may also be sent via facsimile (fax) to 907–586–7557. As an agency pilot test for accepting comments electronically, the Alaska Region, NMFS, will accept e-mail comments on this rule. The mailbox address for providing e-mail comments on this rule is DSR–0648–AP73@noaa.gov. Copies of the Environmental Assessment/Regulatory Impact Review/Initial Regulatory Flexibility Analysis (EA/RIR/IRFA) prepared for the proposed rule may be obtained from the Sustainable Fisheries Division, Alaska Region, NMFS, P.O. Box 21668, Juneau, AK 99802–1668, Attn: Lori Durall, or by calling the Alaska Region, NMFS, at (907) 586–7228. Send comments on collection-of-information requirements to NMFS, Alaska Region, and to the Office of Information and Regulatory Affairs (OIRA), Office of Management and Budget (OMB), Washington, DC 20503 (Attn: NOAA Desk Officer).

FOR FURTHER INFORMATION CONTACT: Nina Mollett, 907–586–7462 or Nina.Mollett@noaa.gov.

SUPPLEMENTARY INFORMATION:

Background

The groundfish fisheries in the exclusive economic zone (EEZ) of the GOA are managed under the FMP. One of the species groups managed under the FMP is DSR, an assemblage of seven rockfish species. The FMP was prepared by the North Pacific Fishery Management Council (Council) under the authority of the Magnuson-Stevens Act, 16 U.S.C. 1801, *et seq.* Regulations governing U.S. fisheries and implementing the FMP appear at 50 CFR parts 600 and 679.

The State manages all fisheries occurring within State waters, i.e., within three nautical miles of Alaska's coastline. The FMP defers to the State some management responsibility for the DSR fishery in the SEO, subject to Council and federal oversight. The State management regime must be consistent with the goals of the FMP. Commercial

harvests of DSR are managed within the total allowable catch (TAC) specified annually by NMFS in consultation with the Council. The DSR TAC for 2003 was published March 3, 2003 (68 FR 9924).

In accordance with the division of management under the FMP, existing State regulations for DSR establish fishing seasons (5 AAC 28.130) and gear restrictions (5 AAC 28.130), set harvest guidelines for directed DSR fishing based on the TAC (5 AAC 28.160), and limit the amount of DSR that can be retained as bait (5 AAC 28.190). Also, the State has a full retention requirement for DSR caught in State waters (5 AAC 28.171). The Council and NMFS establish the annual TAC for DSR (see § 679.20), regulate the catch of prohibited species in the DSR directed fishery (see § 679.21), set recordkeeping and reporting requirements (see § 679.5), and impose a maximum retention requirement for DSR caught incidentally in Federal fisheries (see § 679.20(d)-(e); Table 10 to Part 679).

Management Background and Need for Action

The DSR species group is composed of seven species of nearshore, bottom-dwelling rockfishes: Canary rockfish (*Sebastes pinniger*), China rockfish (*S. nebulosus*), copper rockfish (*S. caurinus*), quillback rockfish (*S. maliger*), rosethorn rockfish (*S. helvomaculatus*), tiger rockfish (*S. nigrocinctus*), and yelloweye rockfish (*S. ruberrimus*). These species have been managed as a group in the GOA since 1988. All of them occur on the continental shelf and are generally associated with rugged, rocky demersal habitat. The dominant species in the group is yelloweye rockfish, which accounts for 90 percent of DSR landings over the past 5 years. Quillback rockfish accounts for 8 percent of DSR landings, and the other five species make up the remaining 2 percent. Compared to many fish species, DSR grow slowly, are extremely long-lived, and have a very low natural mortality rate. They are highly susceptible to overexploitation and are slow to recover once driven below the level of sustainable yield. Accurate estimates of DSR fishing mortality are important to avoid overfishing.

In 1996, NMFS and State stock assessment scientists identified the unreported mortality of DSR as a potential problem in preparing the annual DSR stock assessments. Strong anecdotal evidence pointed to a high level of unreported DSR discard mortality in the Pacific halibut hook-and-line gear fishery, which is the primary fishery that encounters incidental catch of DSR in the SEO.

When the DSR fishery is closed to directed fishing, existing regulations at § 679.20(d)-(f) require fishermen to discard at sea any DSR that exceeds the MRAs set forth in Table 10 to Part 679 at any time during a fishing trip. At this time, the GOA fisheries that are prosecuted with hook-and-line or jig gear in the SEO are IFQ halibut and IFQ sablefish, and to some extent Pacific cod and ''other species.'' The remaining GOA groundfish species are either prosecuted with trawl gear, which is prohibited in the SEO, or closed to directed fishing during the fishing year. Under the current regulations, if fishing for IFQ halibut, Pacific cod, or ''other species,'' the MRA for DSR is an amount that is equivalent to 10 percent of the aggregate round weight of retained catch of halibut, Pacific cod, and some other species; if fishing for IFQ sablefish and certain other species, the MRA for DSR is an amount that is equivalent to 1 percent of the aggregate round weight of retained catch. If any IFQ halibut or IFQ sablefish is aboard, under § 679.7(f)(8) fishermen must retain all rockfish that they are not required to discard. The MRAs were established to discourage fishermen from targeting on DSR while fishing for halibut or groundfish species open to directed fishing. However, in some places the natural incidental catch rate of DSR may be much higher than the specified MRA, forcing fishermen to discard DSR that they cannot avoid catching. DSR do not survive being caught and discarded because rockfish have a closed swim bladder that expands when the fish are brought to the surface and cannot be contracted again.

In June 1999, the Council adopted a proposal from the State to require full retention of DSR in the SEO for the purpose of improving estimates of DSR bycatch mortality. A similar proposal was brought to the State Board of Fisheries (Board) to require full retention of DSR caught in State waters. In June 2000, the Board adopted, and the State enacted, a regulation requiring full retention of all rockfish caught in Inside waters, and of DSR in all State waters.

NMFS prepared a proposed rule to implement the Council's June 1999 action. The draft proposed rule would have required full retention of DSR and allowed fishermen to sell amounts of retained DSR that were less than or equal to specified limits of other retained catch. DSR in excess of those limits could be: (1) sold, with proceeds from the sale relinquished to the State, or (2) retained and used for personal use or donation; but not traded, bartered or sold. This draft proposed rule was never published, because NMFS determined that it did not have the authority under the Magnuson-Stevens Act to regulate the proceeds from the sale of fish under the first option.

Subsequently, NMFS amended the EA/RIR/IRFA to include two new alternatives that were intended to meet the Council's objective for enhanced accounting of DSR mortality under existing statutory authority. In February 2003, after review of this analysis, the Council adopted an alternative that is similar to the one previously adopted, except that retained amounts of DSR that are over the specified sale limits would not be allowed to enter the stream of commerce.

The Council's objectives in designing the original proposed rule, and the variation that it adopted in February 2003, can be summed up as follows:

1. To improve data collection on the incidental catch of DSR in the halibut and groundfish hook-and-line fisheries in the SEO in order to more accurately estimate DSR fishing mortality, improve DSR stock assessments, and evaluate whether current MRAs are the appropriate levels for DSR in the SEO;
2. To minimize waste to the extent practicable while meeting these goals;
3. To avoid either increasing incentives to target on DSR or increasing incentives to discard DSR that is caught in excess of the amount that can legally be sold for profit; and
4. To maintain a consistent approach within State and Federal regulations that govern the retention and disposition of DSR.

These four objectives, and the manner in which they would be achieved under the proposed rule, are discussed in detail below.

Improving Data Collection

Some information on DSR is collected from fishermen via logbook requirements under current regulations, but the data obtained this way are incomplete. NMFS requires groundfish vessel operators of vessels at least 60 feet (18.3 meters) in length overall to record discards in daily fishing logbooks, but most of the vessels that fish with hook-and-line and jig gear in the SEO are less than 60 feet (18.3 meters) in length. The International Pacific Halibut Commission requires all vessels 26 feet (7.9 meters) or greater to keep logbooks of their halibut fishing operations, but does not require them to record rockfish bycatch. State fish tickets include a box for reporting discards at sea, but anecdotal evidence, supported by data from International

Pacific Halibut Commission surveys, indicates that the requirements to report at-sea discards, including DSR, frequently are ignored and the discards go unreported.

A more thorough reporting system exists for landed fish. Under State regulations at 5 AAC 39.110(c), all fish caught in State waters or in the EEZ and landed at Alaskan ports must be weighed and reported on Alaska Department of Fish and Game (ADF&G) fish tickets. This is the responsibility either of the buyer of raw fish, or of the fisherman who sells to a buyer not licensed to process fish, or who processes his or her own catch. DSR landed in ports outside of Alaska must also be reported under existing federal and State regulations. State-licensed fishermen who catch fish in State waters and land it in ports outside of Alaska must, under State regulations, complete an ADF&G fish ticket or equivalent document estimating weights by species, with gear and location information; more precise information is generally obtained from fish tickets filled out by the out-of-State processors. Fishermen who catch fish in the EEZ and land it outside of Alaska are not covered by these State requirements but, under federal regulations at § 679.5(k), they must submit a vessel activity report estimating the weight of the fish or fish products, by species.

By mandating the complete retention of all DSR caught by catcher vessels fishing in the SEO, the proposed rule would be likely to result in much better information on the incidental catch of DSR by these vessels, because data on retained and landed fish are more fully captured by the existing reporting system. NMFS recognizes that improved data collection on incidental catch of DSR under the proposed rule is dependent on fishermen retaining all of the DSR that they catch and that some fishermen, without increased monetary incentives (i.e., the ability to sell all retained DSR), may choose to violate the proposed rule if it is ultimately implemented. However, the amount of DSR landed has increased substantially under the State's DSR full retention regulations that were promulgated in 2001: Over 42,000 lbs (19,051 kg) of DSR were forfeited in Southeast Alaska in 2001, compared to less than 16,000 lbs (7,257 kg) in 2000. A large part of this increase came from fishermen active in Federal waters of the SEO to whom the full retention requirements did not apply. Deliveries in this category reported from Federal waters rose from 8,760 pounds (3,973 kg) in 2000 to 22,931 pounds (10,401 kg) in 2001. The increase in deliveries from Federal waters accounted for 45 percent of the total increase in deliveries.

CPs would not be included in the full retention requirements of this proposed rule, but would be required to observe current MRA limits. For the observed CPs in the SEO from 2001 through the present, DSR species were infrequently caught, because typically the CPs are fishing for sablefish in deeper waters than that preferred by DSR species. Only 4.4 percent of 159 sampled sets included DSR species; the average percentage of DSR in the catch was only 0.11. Therefore, it did not seem necessary and would unduly complicate matters to include CPs in the new DSR full retention and landing requirements. Because most CPs carry NMFS-certified observers, NMFS will continue to use observer data to estimate DSR mortality within this sector.

Stock assessments based on improved catch data could lead to changes in management. If the bycatch mortality of DSR in the groundfish and IFQ halibut fisheries is significantly higher than currently estimated, the directed fishery for DSR could be reduced to decrease the risk of overfishing. In 2002, the directed fishery for DSR was pre-empted by the IFQ halibut fishery in East Yakutat a State-designated management area because the anticipated mortality of DSR in the East Yakutat halibut fishery was greater than its area-specific allowable biological catch. The reverse might occur the DSR directed fishery quota could be increased in the less likely event that DSR incidental catch rates and fishing mortality are lower than currently estimated.

In developing this proposed rule, NMFS considered as an alternative the institution of an observer program for the IFQ halibut fishery. Under this alternative, observers may eventually be used to help collect DSR data in the context of a comprehensive observer program in the Gulf of Alaska. However, one problem such a program would encounter is the variability of catch in the DSR fisheries. Yelloweye and the other DSR species have specialized habitat needs, which means that they are more sparsely distributed than most other species. Statistics from an International Pacific Halibut Commission survey in 2003 measured incidental catch rates of yelloweye in the halibut hook-and-line fishery ranging from 0 to 83 percent for individual sets. The mean ranged from 3 percent in the East Yakutat subdistrict to 18 percent in the Northern Southeast Outside subdistrict. A review of similar 1998 survey data by ADF&G concluded that fishing patterns, including area, depth, and season fished, greatly affect incidental catch rates. Therefore, in order to be effective, a sampling program for DSR likely would require that a high percentage of vessels carry observers. Such a program would be costly for the halibut fleet as well as impracticable because halibut vessels might be unable to accommodate observers due to space limitations.

Avoiding Waste

The second objective of this action is to avoid wasting DSR that are killed as a result of fishing activity. DSR suffer internal injuries when they are brought to the surface, and the mortality rate for incidentally-caught DSR in Alaska is 100 percent. Some fishermen have expressed dissatisfaction with the current regulations, which require them to discard dead fish that could otherwise be used for human consumption. By requiring the retention and landing of all DSR that are caught, the proposed rule would eliminate the discard of DSR at sea and would create the potential for increased human consumption through personal use and charitable donations.

The extent to which DSR in excess of the amount that could be sold is made available for human consumption under the proposed rule depends partly on whether a workable donation system could be set up in the larger communities involved. Some of the DSR retained under this rule would be kept for personal use, but presumably if too much DSR were landed, fishermen would not want to retain it. A donation program that would distribute the fish to charities locally or nationwide, but one that would not generate profits which could lead to targeting of DSR, is one possibility being explored. It is not clear however whether such a program will be feasible for DSR even in the larger communities involved Sitka and Juneau because of the costs involved in filleting and storing relatively small amounts of fish at a time. NMFS anticipates that much of the DSR in excess of the amount that could be sold will become part of the processors' waste stream.

Avoiding Unwanted Incentives

The proposed full retention program is intended to enhance the collection of DSR catch data without encouraging increased ''topping off'' of DSR by fishermen engaged in directed groundfish and halibut fisheries. ''Topping off'' occurs when a vessel operator deliberately targets a valuable species that is closed to directed fishing, in order to ensure that the vessel retains the maximum amount of that species allowed by law. The current MRAs for

DSR in the IFQ Pacific halibut and groundfish fisheries allow fishermen to top off on trips where the rate of incidental DSR catch is less than the specified MRA. In areas where the rate exceeds the MRA, fishermen are required to discard the overage.

Maintaining a limit on the amount of retained DSR that may be sold for profit is designed to eliminate any incentive for increased topping off activity. Under the proposed rule, amounts of DSR that exceed the amount that could be sold would be prohibited from entering the stream of commerce, but, for example, could be retained for personal consumption, donated to a State-recognized charity, or discarded. A donation program, or the option to keep the fish, would give fishermen who dislike discarding dead fish on principle an incentive for complying with the regulations and bringing the fish to port.

Maintaining Consistency between State and Federal Regulations

At present, fishermen are subject to two very different sets of Federal and State regulations concerning management of incidentally caught DSR. The proposed rule would establish Federal regulations that are very similar, although not identical, to existing State regulations concerning management of incidentally caught DSR. State regulations require fishermen to surrender the proceeds from the sale of DSR in excess of the MRAs to the State (5 AAC 28.171(a)). These proceeds are deposited in the State's Fish and Game Fund, and used primarily for research. Under the proposed rule, however, amounts of DSR caught in Federal waters that exceed the proscribed sale limits could not be sold or allowed to enter the stream of commerce.

The Council has requested the State to prepare a report within three years of the effective date of this regulation, if adopted as final, analyzing the success of this program in achieving its primary goal of better data collection, and recommending whether the program should continue or whether a maximum retention rate should be reinstated for DSR.

Elements of the Proposed Rule

This proposed rule has two main provisions. The first provision addresses retention and landing requirements. The operator of a federally-permitted catcher vessel using hook-and-line or jig gear would be required to retain and land all DSR that is caught while fishing for groundfish or IFQ halibut in the SEO.

The proposed rule contains no new recordkeeping or recording requirements. As explained in the ''Improving Data'' collection section of this proposed rule, landed fish must be reported under existing federal and State regulations.

The second provision addresses disposal of retained amounts of DSR. Under the proposed rule, if a person wanted to sell retained DSR, he (or she) would be limited to no more than 10 percent of the aggregate round weight equivalent of IFQ halibut and groundfish, other than IFQ sablefish, that he retained onboard the vessel; for IFQ sablefish, the amount of retained DSR a fisherman could sell for profit would be limited to no more than 1 percent of the aggregate round weight equivalent of IFQ sablefish he retained onboard the vessel. Fishermen could use amounts of retained DSR in excess of these sale limits for other purposes, including personal consumption or donation, but this amount of DSR would be prohibited from entering commerce through sale, barter, or trade.

Table 10 would be amended by adding a footnote to the DSR column cross referencing § 679.20(j).

Classification

This proposed rule has been determined to be not significant for purposes of E.O. 12866.

There are no federalism implications as that term is defined in E.O. 13132. However, NMFS has been in contact with state officials to ensure that they are aware of the provisions in this proposed rule.

NMFS prepared an Initial Regulatory Flexibility Analysis (IRFA). The IRFA describes any adverse impacts this proposed rule, if adopted, would have on directly regulated small entities. A copy of this analysis is available from the NMFS (see **ADDRESSES**). This IRFA evaluates the effects of the proposed action on regulated small entities. The reasons for the action, a statement of the objectives of the action, and the legal basis for the proposed rule, are discussed earlier in the preamble. The directly regulated entities are those vessels taking DSR as incidental catch in halibut and groundfish fisheries in Federal waters of the SEO and the processors buying the DSR from them. NMFS estimates that 423 vessels participated in these fisheries in 2000 (before the State regulations requiring full retention of DSR caught in State waters were implemented). Most of these vessels were less than 60 feet (18.3 meters) in length, fishing with hook-and-line gear and jig gear. Average gross revenues for these vessels from the Alaskan halibut and groundfish fisheries were about $262,000. Average gross revenues from all fisheries for these entities are undoubtedly higher, since many of these vessels participate in other fisheries. In the years from 1996 to 2001, between 17 and 26 plants bought groundfish in Southeast Alaska. In 2000, the average gross revenues for these plants were about $12 million. NMFS estimates that the fishing and processing operations regulated under this proposed rule are small entities within the meaning of the Regulatory Flexibility Act.

Under this proposed rule, small entities may experience increased costs associated with handling the additional DSR, storing them on the vessel until it reaches port, and unloading and disposing of the fish. Some fishermen may incur additional costs as a result of changing their fishing patterns for their target species in order to avoid DSR bycatch. Handling and delivery costs would take the form of increased work effort required on the vessel, but would not affect the operation's cash flow. Costs may be higher on smaller vessels using refrigerated sea water (RSW) that lack deck space for special DSR totes, or on vessels that would otherwise have filled their holds with their target fish, but that are unable to given the need to retain a larger amount of DSR. Fishermen will also face costs of disposing of the excess DSR on shore since they will not be allowed to sell the excess. Fishermen may only use the excess DSR for personal use, donate it for charitable purposes, or discard it. Small processors would face the costs of weighing and recording additional DSR that may be landed. They are likely to play a role in helping vessel owners to dispose of DSR in excess of the amount that could be sold. These actions could include allowing employees to fillet and take excess DSR, adding DSR waste to the processors' waste streams, or coordinating with donation programs to take excess DSR. Processors would no longer be able to sell excess DSR from federal waters. In 2001, excess DSR totaled approximately ten metric tons (the largest annual volume listed), equivalent to about $16,000 in gross revenues from this source.

The Council's preferred alternative does not impose any new recordkeeping requirements on regulated entities. NMFS has not been able to identify any relevant Federal rules that may duplicate, overlap, or conflict with the preferred alternative.

The EA/RIR/IRFA evaluated four alternatives: (1) The status quo, (2) full retention allowing all retained DSR to enter the stream of commerce, (3) full retention prohibiting certain amounts of DSR from entering the stream of commerce, and (4) use of an observer

program. Alternative 3 is the preferred alternative. Alternative 1 imposes no adverse impacts on small entities, but fails to advance the action objectives of providing new information on DSR, reducing DSR wastage, and maintaining consistency between State and Federal regulations. Alternative 2 may be less costly than Alternative 3 in that fishermen could allow processors to sell the excess DSR and relinquish the proceeds to the State. However, if processors sold the DSR under Alternative 2, the possibility would exist for them to find roundabout ways to repay fishermen for bringing in excess DSR, thus adding an incentive for vessels to target on DSR. Alternative 3 is discussed in detail in the preamble. Under Alternative 4, fishermen face additional costs for observer coverage, including travel and logistical expenses for observers, and an additional cost of about $330/day for 30 percent of days at sea. This alternative would provide new information on the status of DSR stocks, but would not reduce DSR waste or reduce the inconsistency between State and Federal regulations. Using observers for the DSR incidental catch fishery might become more feasible in the future in the context of a comprehensive restructuring of the observer program that would include funding for the observers so that the entire cost did not fall on fishermen.

The Council considered but rejected several other alternatives because they did not appear to be effective solutions to the stated goals. Those mentioned in the EA include: (a) open the directed DSR fishery during halibut IFQ seasons and require full retention, (b) defer all management of DSR to the State, and (c) implement an IFQ fishery for DSR. The EA also discussed the option of an exempted fishing permit (EFP) conducted in order to obtain bycatch data. However, although such a program might allow more flexibility in design, it would depend on voluntary participation, and would therefore not enable the State to obtain a full census.

A copy of the IRFA is available from NMFS (see **ADDRESSES**).

This rule contains collection-of-information requirements subject to the Paperwork Reduction Act (PRA) that have been approved by the Office of Management and Budget (OMB). These collections are provided below by OMB control number:

OMB No. 0648–0213 This collection contains the recordkeeping and reporting forms and logbooks in which species, including the DSR, are recorded and reported. Total public reporting burden for this family of forms is estimated at 32,329 hours. This estimate covers all forms of logbooks, and is not necessarily indicative of the burden associated with those to whom this rule applies. No measurable increase in burden is associated with this proposed rule because activity under this proposed rule is included in the existing collection.

OMB No. 0648–0206 Public reporting burden is estimated to average 21 minutes for a Federal Fisheries Permit application and 20 minutes for a Federal Processor Permit application. The estimated response times shown include the time to review instructions, search existing data sources, gather and maintain the data needed, and complete and review the collection of information.

Public comment is sought regarding: whether this proposed collection of information is necessary for the proper performance of the functions of the agency, including whether the information shall have practical utility; the accuracy of the burden estimate; ways to enhance the quality, utility, and clarity of the information to be collected; and ways to minimize the burden of the collection of information, including through the use of automated collection techniques or other forms of information technology. Send comments on these or any other aspects of the collection of information to NMFS, Alaska Region at the **ADDRESSES** above, and e-mail to David__Rostker@omb.eop.gov, or fax to (202) 395–7285.

Notwithstanding any other provision of law, no person is required to respond to nor shall a person be subject to a penalty for failure to comply with a collection of information subject to the requirements of the PRA unless that collection of information displays a currently valid OMB control number.

List of Subjects in 50 CFR Part 679

Alaska, Fisheries, Recordkeeping and reporting requirements

Dated: January 13, 2004.

John Oliver,

Deputy Assistant Administrator for Operations, National Marine Fisheries Service.

For reasons set out in the preamble, 50 CFR part 679 is proposed to be amended as follows:

PART 679—FISHERIES OF THE EXCLUSIVE ECONOMIC ZONE OFF ALASKA

1. The authority citation for part 679 continues to read as follows:

Authority: Authority: 16 U.S.C. 773 *et seq.*, 1801 *et seq.*, and 3631 *et seq.*; Title II of Division C, Pub. L. 105–277; Sec. 3027, Pub L. 106–31, 113 Stat. 57; 16 U.S.C. 1540(f).

2. In § 679.20, paragraph (j) is added to read as follows:

§ 679.20 General limitations.

* * * * *

(j) *Full retention of Demersal shelf rockfish (DSR) in the Southeast Outside District of the GOA (SEO)*

(1) *Retention and landing requirements.* The operator of a catcher vessel that is required to have a federal fisheries permit, or that harvests IFQ halibut with hook and line or jig gear, must retain and land all DSR that is caught while fishing for groundfish or IFQ halibut in the SEO.

(2) *Disposal of DSR when closed to directed fishing.* When DSR is closed to directed fishing in the SEO, the operator of a catcher vessel that is required to have a Federal fisheries permit under § 679.4 (b), or the manager of a shoreside processor that is required to have a Federal processor permit under § 679.4(f), must dispose of DSR retained and landed in accordance with paragraph (j)(1) of this section as follows:

(i) *Ten percent limit on sale of DSR caught while fishing with hook-and-line or jig gear for IFQ halibut or groundfish species other than sablefish in the SEO.* A person may sell, barter, or trade a round weight equivalent amount of DSR that is less than or equal to10 percent of the aggregate round weight equivalent of IFQ halibut and groundfish species, other than sablefish, that are landed during the same fishing trip.

(ii) *One percent limit on sale of DSR caught while fishing with hook-and-line or jig gear for IFQ sablefish in the SEO.* A person may sell, barter, or trade a round weight equivalent amount of DSR that is less than or equal to1 percent of the aggregate round weight equivalent of IFQ sablefish that are landed during the same fishing trip.

(iii) *Disposal of amounts of DSR that are in excess of the sale limits.* Amounts of DSR retained by catcher vessels under paragraph (j)(1) of this section that are in excess of the limits specified in paragraphs (j)(2)(i) and (ii) may be put to any use, including but not limited to personal consumption or donation, but must not enter commerce through sale, barter, or trade.

3. In 50 CFR part 679, Table 10 is revised as follows:

BILLING CODE 3510–22–S

Table 10 to Part 679—Gulf of Alaska Retainable Percentages

BASIS SPECIES		INCIDENTAL CATCH SPECIES (for DSR caught on catcher vessels in the SEO, see § 679.20 (j)[6])													
Code	Species	Pollock	Pacific cod	DW flat [2]	Rex sole	Flathead sole	SW flat [3]	Arrowtooth	Sablefish	Aggregated rockfish[8]	SR/RE ERA [1]	DSR SEO (C/Ps only): [6]	Atka mackerel	Aggregated forage fish [10]	Other species [7]
110	Pacific cod	20	na[9]	20	20	20	20	35	1	5	[1]	10	20	2	20
121	Arrowtooth	5	5	0	0	0	0	na[9]	0	0	0	0	0	2	0
122	Flathead sole	20	20	20	20	na[9]	20	35	7	15	7	1	20	2	20
125	Rex sole	20	20	20	na[9]	20	20	35	7	15	7	1	20	2	20
136	Northern rockfish	20	20	20	20	20	20	35	7	15	7	1	20	2	20
141	Pacific ocean perch	20	20	20	20	20	20	35	7	15	7	1	20	2	20
143	Thornyhead	20	20	20	20	20	20	35	7	15	7	1	20	2	20
152/151	Shortraker/rougheye [1]	20	20	20	20	20	20	35	7	15	na[9]	1	20	2	20
193	Atka mackerel	20	20	20	20	20	20	35	1	5	[1]	10	na[9]	2	20
270	Pollock	na[9]	20	20	20	20	20	35	1	5	[1]	10	20	2	20
710	Sablefish	20	20	20	20	20	20	35		15	7	1	20	2	20
Flatfish, deep water [2]		20	20	na[9]	20	20	20	35	7	15	7	1	20	2	20
Flatfish, shallow water [3]		20	20	20	20	20	na[9]	35	1	5	[1]	10	20	2	20

BASIS SPECIES		INCIDENTAL CATCH SPECIES (for DSR caught on catcher vessels in the SEO, see § 679.20 (j)[6])													
Code	Species	Pollock	Pacific cod	DW flat [2]	Rex sole	Flathead sole	SW flat [3]	Arrowtooth	Sablefish	Aggregated rockfish[8]	SR/RE ERA [1]	DSR SEO (C/Ps only): [6]	Atka mackerel	Aggregated forage fish [10]	Other species [7]
Rockfish, other [4]		20	20	20	20	20	20	35	7	15	7	1	20	2	20
Rockfish, pelagic [5]		20	20	20	20	20	20	35	7	15	7	1	20	2	20
Rockfish, DSR-SEO [6]		20	20	20	20	20	20	35	7	15	7	na[9]	20	2	20
Other species [7]		20	20	20	20	20	20	35	1	5	[1]	10	20	2	na[9]
Aggregated amount of non-groundfish species		20	20	20	20	20	20	35	1	5	[1]	10	20	2	20

Notes to Table 10 to Part 679				
1	Shortraker/rougheye rockfish			
		SR/RE	shortraker/rougheye rockfish (171)	
			shortraker rockfish (152)	
			rougheye rockfish (151)	
		SR/RE ERA	shortraker/rougheye rockfish in the Eastern Regulatory Area.	
	Where numerical percentage is not indicated, the retainable percentage of SR/RE is included under Aggregated Rockfish			
2	Deep-water flatfish	Dover sole, Greenland turbot, and deep-sea sole		
3	Shallow water flatfish	Flatfish not including deep water flatfish, flathead sole, rex sole, or arrowtooth flounder		
4	Other rockfish	Western Regulatory Area	means slope rockfish and demersal shelf rockfish	
		Central Regulatory Area		
		West Yakutat District		
		Southeast Outside District	means slope rockfish	
		Slope rockfish		
		S. aurora (aurora)	S. variegatus (harlequin)	S. brevispinis (silvergrey)
		S. melanostomus (blackgill)	S. wilsoni (pygmy)	S. diploproa (splitnose)
		S. paucispinis (bocaccio)	S. babcocki (redbanded)	S. saxicola (stripetail)
		S. goodei (chilipepper)	S. proriger (redstripe)	S. miniatus (vermilion)
		S. crameri (darkblotch)	S. zacentrus (sharpchin)	S. reedi (yellowmouth)
		S. elongatus (greenstriped)	S. jordani (shortbelly)	

Notes to Table 10 to Part 679				
		In the Eastern GOA only, Slope rockfish also includes *S. polyspinous*. (Northern)		
5	Pelagic shelf rockfish	S. ciliatus (dusky)	S. entomelas (widow)	S. flavidus (yellowtail)
6	Demersal shelf rockfish (DSR)	S. pinniger (canary)	S. maliger (quillback)	S. ruberrimus (yelloweye)
		S. nebulosus (china)	S. helvomaculatus (rosethorn)	
		S. caurinus (copper)	S. nigrocinctus (tiger)	
		DSR-SEO = Demersal shelf rockfish in the Southeast Outside District The operator of a catcher vessel that is required to have a Federal fisheries permit, or that harvests IFQ halibut with hook and line or jig gear, must retain and land all DSR that is caught while fishing for groundfish or IFQ halibut in the SEO. Limits on sale and requirements for disposal of DSR are set out at § 679.20 (j).		
7	Other species	sculpins	skates	octopus
		sharks	squid	
8	Aggregated rockfish	means rockfish of the genera Sebastes and Sebastolobus defined at § 679.2 except in:		
		Southeast Outside District (SEO)	where DSR is a separate category for those species marked with a numerical percentage	
		Eastern Regulatory Area (ERA)	where SR/RE is a separate category for those species marked with a numerical percentage	
9	N/A	not applicable		
10	Aggregated forage fish (all species of the following families)			
		Bristlemouths, lightfishes, and anglemouths (family Gonostomatidae)	209	
		Capelin smelt (family Osmeridae)	516	
		Deep-sea smelts (family Bathylagidae)	773	

Notes to Table 10 to Part 679			
		Eulachon smelt (family Osmeridae)	511
		Gunnels (family Pholidae)	207
		Krill (order Euphausiacea)	800
		Laternfishes (family Myctophidae)	772
		Pacific herring (family Clupeidae)	235
		Pacific Sand fish (family Trichodontidae)	206
		Pacific Sand lance (family Ammodytidae)	774
		Pricklebacks, war-bonnets, eelblennys, cockscombs and Shannys (family Stichaeidae)	208
		Surf smelt (family Osmeridae)	515

[FR Doc. 04–1220 Filed 1–20–04; 8:45 am]

BILLING CODE 3510–22–C

Notices

Federal Register

Vol. 69, No. 13

Wednesday, January 21, 2004

This section of the FEDERAL REGISTER contains documents other than rules or proposed rules that are applicable to the public. Notices of hearings and investigations, committee meetings, agency decisions and rulings, delegations of authority, filing of petitions and applications and agency statements of organization and functions are examples of documents appearing in this section.

DEPARTMENT OF AGRICULTURE

Agricultural Marketing Service

[Docket No. FV–04–329]

United States Standards for Grades of Canned Pears

AGENCY: Agricultural Marketing Service, USDA.

ACTION: Notice; request for public comment.

SUMMARY: The Agricultural Marketing Service (AMS), prior to undertaking research and other work associated with revising an official grade standard, is soliciting comments on the petition to change the United States Standards for Grades of Canned Pears. AMS received two petitions, one from a grower cooperative, the other from a processor, requesting that USDA change the character classification for Grade ''B'', slices, and diced, to read ''the units are reasonably tender or tenderness may be variable within the unit.''

DATES: Comments must be submitted on or before March 22, 2004.

ADDRESSES: Interested persons are invited to submit written comments concerning this notice. Comments must be sent to Karen L. Kaufman, Standardization Section, Processed Products Branch, Fruit and Vegetable Programs, Agricultural Marketing Service, U.S. Department of Agriculture, 1400 Independence Avenue, SW.; Room 0709, South Building; STOP 0247, Washington, DC 20250; Fax (202) 690–1527, e-mail *Karen.Kaufman@usda.gov.* The United States Standards for Grades of Canned Pears is available either through the address cited above or by accessing the AMS Home page on the Internet at *http://www.ams.usda.gov/standards/frutcan.htm.*

SUPPLEMENTARY INFORMATION:

Background

AMS received two petitions, one from a grower cooperative and the other from a processor, requesting the revision of the United States Standards for Grades of Canned Pears. The standards are established under the authority of the Agricultural Marketing Act of 1946 (7 U.S.C. 1621–1627). The petitioners represent growers from Washington State, Oregon and parts of California.

The petitioners are requesting that USDA change the character classification for Grade ''B'', slices, and diced, to include the following: ''the units are reasonably tender or the tenderness may be variable within the unit.'' The current standard contains this wording for character classifications for halves, quarters, pieces or irregular pieces and whole pears. The petitioners believe the change in the standard will improve the economic position of domestic growers of pears.

Agricultural Marketing Service

Prior to undertaking detailed work to develop a revision to the standard, AMS is soliciting for comments on the petitions submitted to change the United States Standards for Grades of Canned Pears.

This notice provides a 60 day comment period for interested parties to comment on changes to the standard. Should AMS conclude that there is an interest in the proposal, the Agency will develop a proposed revised standard that will be published in the **Federal Register** with a request for comments in accordance with 7 CFR part 36.

Authority: 7 U.S.C. 1621–1627

Dated: January 14, 2004.

A.J. Yates,

Administrator, Agricultural Marketing Service.

[FR Doc. 04–1207 Filed 1–20–04; 8:45 am]

BILLING CODE 3410–02–M

DEPARTMENT OF AGRICULTURE

Agricultural Marketing Service

[Docket No. FV–04–376]

Fruit and Vegetable Industry Advisory Committee

AGENCY: Agricultural Marketing Service, USDA.

ACTION: Notice of public meeting.

SUMMARY: The purpose of this notice is to notify all interested parties that the Agricultural Marketing Service (AMS) will hold a Fruit and Vegetable Industry Advisory Committee (Committee) meeting that is open to the public. The U.S. Department of Agriculture (USDA) established the Committee to examine the full spectrum of issues faced by the fruit and vegetable industry and to provide suggestions and ideas to the Secretary of Agriculture on how USDA can tailor its programs to meet the fruit and vegetable industry's needs. This notice sets forth the schedule and location for the meeting.

DATES: Thursday, February 19, 2004, from 8 a.m. to 5:30 p.m., and Friday, February 20, 2004, from 8 a.m. to 2 p.m.

ADDRESSES: The Committee meeting will be held at the Hilton Hotel Crystal City, 2399 Jefferson Davis Highway, Arlington, VA.

FOR FURTHER INFORMATION CONTACT: Sandra K. Gardei, Marketing Specialist, Fruit and Vegetable Programs, AMS, USDA, 1400 Independence Avenue, SW., Room 2071–S, Stop 0235, Washington DC 20250–0235. Telephone: (202) 720–3618. Facsimile: (202) 720–0016. E-mail: *Sandra.gardei@usda.gov.*

SUPPLEMENTARY INFORMATION: Pursuant to the Federal Advisory Committee Act (FACA) (5 U.S.C. App.), the Secretary of Agriculture established the Committee in August 2001 to examine the full spectrum of issued faced by the fruit and vegetable industry and to provide suggestions and ideas to the Secretary on how USDA can tailor its programs to meet the fruit and vegetable industry's needs. The committee was rechartered in August 2003 and new members were appointed from industry nominations.

AMS Deputy Administrator for Fruit and Vegetable Programs, Robert C. Keeney, serves as the Committee's Executive Secretary and Sandra Gardei as the Designated Federal Official. Representatives from USDA mission areas and other government agencies affecting the fruit and vegetable industry will be called upon to participate in the Committee's meetings as determined by the Committee Chairperson. AMS is giving notice of the committee meeting to the public so that they may wish to attend and present their recommendations. The meeting is scheduled for Thursday, February 19,

2004, from 8 a.m. to 5:30 p.m., and Friday, February 20, 2004, from 8 a.m. to 2 p.m., at the Hilton Hotel Crystal City, 2399 Jefferson Davis Highway, Arlington, VA.

Topics to be discussed at the meeting will include: USDA programs that encourage increased consumption of fruits and vegetables, grading and auditing programs offered by the Federal-State Inspection Service. AMS' microbiological data program, the organizational structure of the Perishable Agriculture Commodities Act Program, and methyl bromide issues.

Those parties that wish to speak at the meeting should register on or before February 13, 2004. To register as a speaker, please e-mail *Sandra.gardei@usda.gov* or facsimile to (202) 720–0016. Registrants should include their name, address, and daytime telephone number. Depending on the number of registered speakers, time limits may be imposed on speakers. Speakers who have registered in advance will be given priority.

If you require special accommodations, such as a sign language interpreter, please contact the person listed for **FOR FURTHER INFORMATION CONTACT**. The meeting will be recorded, and information about obtaining a transcript will be provided at the meeting.

The Secretary of Agriculture has selected a diverse group of members representing a broad spectrum of persons interested in providing suggestions and ideas on how USDA can tailor its programs to meet the fruit and vegetable industry's needs. Equal opportunity practices were considered in all appointments to the Committee in accordance with USDA policies.

Dated: January 14, 2004.

A.J. Yates,

Administrator, Agricultural Marketing Service.

[FR Doc. 04–1208 Filed 1–20–04; 8:45 am]

BILLING CODE 3410–02–M

DEPARTMENT OF AGRICULTURE

Agricultural Research Service

Notice of Intent To Grant Exclusive License

AGENCY: Agricultural Research Service, USDA.

ACTION: Notice of intent.

SUMMARY: Notice is hereby given that the U.S. Department of Agriculture, Agricultural Research Service, intends to grant Tetracore, Inc. of Gaithersburg, Maryland an exclusive license to U.S. Patent No. 5,985,576, ''Species-specific genetic identification of Mycobacterium paratuberculosis,'' issued on November 16, 1999. Notice of Availability of this invention for licensing was published in the **Federal Register** on November 3, 1999.

DATES: Comments must be received on or before February 20, 2004.

ADDRESSES: Send comments to: USDA, ARS, Office of Technology Transfer, 5601 Sunnyside Avenue, Room 4–1174, Beltsville, Maryland 20705–5131.

FOR FURTHER INFORMATION CONTACT: June Blalock of the Office of Technology Transfer at the Beltsville address given above; telephone: 301–504–5989.

SUPPLEMENTARY INFORMATION: The Federal Government's patent rights in this invention are assigned to the United States of America, as represented by the Secretary of Agriculture. It is in the public interest to so license this invention as Tetracore, Inc. of Gaithersburg, Maryland has submitted a complete and sufficient application for a license. The prospective license will be royalty-bearing and will comply with the terms and conditions of 35 U.S.C. 209 and 37 CFR 404.7. The prospective license may be granted unless, within thirty (30) days from the date of this published Notice, the Agricultural Research Service receives written evidence and argument which establishes that the grant of the license would not be consistent with the requirements of 35 U.S.C. 209 and 37 CFR 404.7.

Michael D. Ruff,

Assistant Administrator.

[FR Doc. 04–1206 Filed 1–20–04; 8:45 am]

BILLING CODE 3410–03–P

DEPARTMENT OF COMMERCE

Bureau of the Census

Request for Nominations of Members To Serve on the Census Advisory Committee on the African American Population

AGENCY: Bureau of the Census, Commerce.

ACTION: Notice of request for nominations.

SUMMARY: Pursuant to the Federal Advisory Committee Act (5 United States Code (U.S.C.), Appendix 2, Section 10(a)(b)), the Bureau of the Census (Census Bureau) requests nominations of individuals to the Census Advisory Committee on the African American Population. The Census Bureau will consider nominations received in response to this Request for Nominations, as well as from other sources. The **SUPPLEMENTARY INFORMATION** section for this notice provides committee and membership criteria.

DATES: Please submit nominations by February 20, 2004.

ADDRESSES: Please submit nominations to Ms. Jeri Green, Chief, Census Advisory Committee Office, U.S. Census Bureau, Department of Commerce, Room 3627, Federal Building 3, Washington, DC 20233, or by fax to (301) 457–8608.

FOR FURTHER INFORMATION CONTACT: Ms. Jeri Green, Chief, Census Advisory Committee Office, at the above address or by telephone at (301) 763–2070.

SUPPLEMENTARY INFORMATION: The Committee was established in accordance with the Federal Advisory Committee Act (Title 5, U.S.C., Appendix 2) in 1995. The following provides information about the Committee, membership, and the nomination process.

Objectives and Duties

1. The Committee provides an organized and continuing channel of communication between African American communities and the Census Bureau. Committee members identify useful strategies to reduce the differential undercount for the African American population and ways data can be disseminated for maximum usefulness to the African American population.

2. The Committee draws upon prior decennial planning efforts, research studies, test censuses, and other experiences to provide advice and recommendations for the 2010 census, the American Community Survey, and related decennial programs.

3. The Committee functions solely as an advisory body under the Federal Advisory Committee Act.

4. The Committee reports to the Director of the Census Bureau.

Membership

1. Members are appointed by and serve at the discretion of the Secretary of Commerce.

2. Members are appointed to the nine-member Committee for a period of three years. Members will be reevaluated at the conclusion of the three-year term with the prospect of renewal, pending Advisory Committee needs and the Secretary's concurrence. Committee members are selected in accordance with applicable Department of Commerce guidelines. The Committee aims to have a balanced representation,

considering such factors as geography, gender, technical expertise, community involvement, and knowledge of census procedures and activities. The Committee aims to include members from diverse backgrounds, including state and local governments, academia, media, research, community-based organizations, and the private sector. No employee of the federal government can serve as a member of the Committee. Meeting attendance and active participation in the activities of the Advisory Committee are essential for sustained Committee membership.

Miscellaneous

1. Members of the Committee serve without compensation, but receive reimbursement for Committee-related travel and lodging expenses.

2. The Committee meets at least once a year, budget permitting, but additional meetings may be held as deemed necessary by the Census Bureau Director or Designated Federal Official. All Committee meetings are open to the public in accordance with the Federal Advisory Committee Act.

Nomination Information

1. Nominations are requested as described above.

2. Nominees should have expertise and knowledge of the cultural patterns and issues and/or data needs of the African American community. Such knowledge and expertise are needed to provide advice and recommendations to the Census Bureau on how best to enumerate the African American population and obtain complete and accurate data on this population. Individuals, groups, or organizations may submit nominations on behalf of a potential candidate. A summary of the candidate's qualifications (résumé or curriculum vitae) *must* be included with the nomination letter. Nominees must have the ability to participate in Advisory Committee meetings and tasks. Besides Committee meetings, active participation may include Committee assignments and participation in conference calls and working groups.

3. The Department of Commerce is committed to equal opportunity in the workplace and seeks diverse Committee membership.

Dated: January 15, 2004.

Charles Louis Kincannon,

Director, Bureau of the Census.

[FR Doc. 04–1181 Filed 1–20–04; 8:45 am]

BILLING CODE 3510–07–P

DEPARTMENT OF COMMERCE

Bureau of the Census

Request for Nominations of Members To Serve on the Census Advisory Committee on the American Indian and Alaska Native Populations

AGENCY: Bureau of the Census, Commerce.

ACTION: Notice of request for nominations.

SUMMARY: Pursuant to the Federal Advisory Committee Act (5 United States Code (U.S.C.) Appendix 2, Section 10(a)(b)), the Bureau of the Census (Census Bureau) requests nominations of individuals to the Census Advisory Committee on the American Indian and Alaska Native Populations. The Census Bureau will consider nominations received in response to this Request for Nominations, as well as from other sources. The **SUPPLEMENTARY INFORMATION** section for this notice provides committee and membership criteria.

DATES: Please submit nominations by February 20, 2004.

ADDRESSES: Please submit nominations to Ms. Jeri Green, Chief, Census Advisory Office, U.S. Census Bureau, Department of Commerce, Room 3627, Federal Building 3, Washington, DC 20233, or by fax to (301) 457–8608.

FOR FURTHER INFORMATION CONTACT: Ms. Jeri Green, Chief, Census Advisory Committee Office, at the above address or by telephone at (301) 763–2070.

SUPPLEMENTARY INFORMATION: The Committee was established in accordance with the Federal Advisory Committee Act (Title 5, U.S.C., Appendix 2) in 1995. The following provides information about the Committee, membership, and the nomination process.

Objectives and Duties

1. The Committee provides an organized and continuing channel of communication between American Indian and Alaska Native communities and the Census Bureau. Committee members identify useful strategies to reduce the differential undercount for the American Indian and Alaska Native populations and ways data can be disseminated for maximum usefulness to the American Indian and Alaska Native populations.

2. The Committee draws upon prior decennial planning efforts, research studies, test censuses, and other experiences to provide advice and recommendations for the 2010 census, the American Community Survey, and related decennial programs.

3. The Committee functions solely as an advisory body under the Federal Advisory Committee Act.

4. The Committee reports to the Director of the Census Bureau.

Membership

1. Members are appointed by and serve at the discretion of the Secretary of Commerce.

2. Members are appointed to the nine-member Committee for a period of three years. Members will be reevaluated at the conclusion of the three-year term with the prospect of renewal, pending Advisory Committee needs and the Secretary's concurrence. Committee members are selected in accordance with applicable Department of Commerce guidelines. The Committee aims to have a balanced representation, considering such factors as geography, gender, technical expertise, community involvement, and knowledge of census procedures and activities. The Committee aims to include members from diverse backgrounds, including state, local, and tribal governments; academia; media; research; community-based organizations; and the private sector. No employee of the federal government can serve as a member of the Committee. Meeting attendance and active participation in the activities of the Advisory Committee are essential for sustained Committee membership.

Miscellaneous

1. Members of the Committee serve without compensation, but receive reimbursement for Committee-related travel and lodging expenses.

2. The Committee meets at least once a year, budget permitting, but additional meetings may be held as deemed necessary by the Census Bureau Director or Designated Federal Official. All Committee meetings are open to the public in accordance with the Federal Advisory Committee Act.

Nomination Information

1. Nominations are requested as described above.

2. Nominees should have expertise and knowledge of the cultural patterns and issues and/or data needs of the American Indian and Alaska Native communities. Such knowledge and expertise are needed to provide advice and recommendations to the Census Bureau on how best to enumerate the American Indian and Alaska Native populations and obtain complete and accurate data on these populations. Individuals, groups, or organizations may submit nominations on behalf of a

potential candidate. A summary of the candidate's qualifications (résumé or curriculum vitae) *must* be included with the nomination letter. Nominees must have the ability to participate in Advisory Committee meetings and tasks. Besides Committee meetings, active participation may include Committee assignments and participation in conference calls and working groups.

3. The Department of Commerce is committed to equal opportunity in the workplace and seeks diverse Committee membership.

Dated: January 15, 2004.

Charles Louis Kincannon,

Director, Bureau of the Census.

[FR Doc. 04–1182 Filed 1–20–04; 8:45 am]

BILLING CODE 3510–07–P

DEPARTMENT OF COMMERCE

Bureau of the Census

Request for Nominations of Members To Serve on the Census Advisory Committee on the Asian Population

AGENCY: Bureau of the Census, Commerce.

ACTION: Notice of request for nominations.

SUMMARY: Pursuant to the Federal Advisory Committee Act (5 United States Code (U.S.C.) Appendix 2, Section 10(a)(b)), the Bureau of the Census (Census Bureau) requests nominations of individuals to the Census Advisory Committee on the Asian Population. The Census Bureau will consider nominations received in response to this Request for Nominations, as well as from other sources. The **SUPPLEMENTARY INFORMATION** section for this notice provides committee and membership criteria.

DATES: Please submit nominations by February 20, 2004.

ADDRESSES: Please submit nominations to Ms. Jeri Green, Chief, Census Advisory Committee Office, Bureau of the Census, Department of Commerce, Room 3627, Federal Building 3, Washington, DC 20233, or by fax to (301) 457–8608.

FOR FURTHER INFORMATION CONTACT: Ms. Jeri Green, Chief, Census Advisory Committee Office, at the above address or by telephone at (301) 763–2070.

SUPPLEMENTARY INFORMATION: The Committee was established in accordance with the Federal Advisory Committee Act (Title 5, U.S.C., Appendix 2) in 1995. The following provides information about the Committee, membership, and the nomination process.

Objectives and Duties

1. The Committee provides an organized and continuing channel of communication between Asian communities and the Census Bureau. Committee members identify useful strategies to reduce the differential undercount for the Asian population and ways data can be disseminated for maximum usefulness to the Asian population.

2. The Committee draws upon prior decennial planning efforts, research studies, test censuses, and other experiences to provide advice and recommendations for the 2010 census, the American Community Survey, and related decennial programs.

3. The Committee functions solely as an advisory body under the Federal Advisory Committee Act.

4. The Committee reports to the Director of the Census Bureau.

Membership

1. Members are appointed by and serve at the discretion of the Secretary of Commerce.

2. Members are appointed to the nine-member Committee for a period of three years. Members will be reevaluated at the conclusion of the three-year term with the prospect of renewal, pending Advisory Committee needs and the Secretary's concurrence. Committee members are selected in accordance with applicable Department of Commerce guidelines. The Committee aims to have a balanced representation, considering such factors as geography, gender, technical expertise, community involvement, and knowledge of census procedures and activities. The Committee aims to include members from diverse backgrounds, including state and local governments, academia, media, research, community-based organizations, and the private sector. No employee of the federal government can serve as a member of the Committee. Meeting attendance and active participation in the activities of the Advisory Committee are essential for sustained Committee membership.

Miscellaneous

1. Members of the Committee serve without compensation, but receive reimbursement for Committee-related travel and lodging expenses.

2. The Committee meets at least once a year, budget permitting, but additional meetings may be held as deemed necessary by the Census Bureau Director or Designated Federal Official. All Committee meetings are open to the public in accordance with the Federal Advisory Committee Act.

Nomination Information

1. Nominations are requested as described above.

2. Nominees should have expertise and knowledge of the cultural patterns and issues and/or data needs of Asian communities. Such knowledge and expertise are needed to provide advice and recommendations to the Census Bureau on how best to enumerate the Asian population and obtain complete and accurate data on this population. Individuals, groups, or organizations may submit nominations on behalf of a potential candidate. A summary of the candidate's qualifications (résumé or curriculum vitae) *must* be included with the nomination letter. Nominees must have the ability to participate in Advisory Committee meetings and tasks. Besides Committee meetings, active participation may include Committee assignments and participation in conference calls and working groups.

3. The Department of Commerce is committed to equal opportunity in the workplace and seeks diverse Committee membership.

Dated: January 15, 2004.

Charles Louis Kincannon,

Director, Bureau of the Census.

[FR Doc. 04–1183 Filed 1–20–04; 8:45 am]

BILLING CODE 3510–07–P

DEPARTMENT OF COMMERCE

Bureau of the Census

Request for Nominations of Members To Serve on the Census Advisory Committee on the Native Hawaiian and Other Pacific Islander Populations

AGENCY: Bureau of the Census, Commerce.

ACTION: Notice of request for nominations.

SUMMARY: Pursuant to the Federal Advisory Committee Act (5 United States Code (U.S.C.) Appendix 2, section 10(a)(b)), the Bureau of the Census (Census Bureau) requests nominations of individuals to the Census Advisory Committee on the Native Hawaiian and Other Pacific Islander Populations. The Census Bureau will consider nominations received in response to this request for nominations, as well as from other sources. The **SUPPLEMENTARY INFORMATION** section for this notice

provides committee and membership criteria.

DATES: Please submit nominations by February 20, 2004.

ADDRESSES: Please submit nominations to Ms. Jeri Green, Chief, Census Advisory Committees Office, Bureau of the Census, Department of Commerce, Room 3627, Federal Building 3, Washington, DC 20233, or by fax to (301) 457–8608.

FOR FURTHER INFORMATION CONTACT: Ms. Jeri Green, Chief, Census Advisory Committee Office, at the above address or by telephone at (301) 763–2070.

SUPPLEMENTARY INFORMATION: The Committee was established in accordance with the Federal Advisory Committee Act (title 5, U.S.C., Appendix 2) in 2000. The following provides information about the Committee, membership, and the nomination process.

Objectives and Duties

1. The Committee provides an organized and continuing channel of communication between Native Hawaiian and Other Pacific Islander communities and the Census Bureau. Committee members identify useful strategies to reduce the differential undercount for the Native Hawaiian and Other Pacific Islander populations and ways data can be disseminated for maximum usefulness to the Native Hawaiian and Other Pacific Islander populations.

2. The Committee draws upon prior decennial planning efforts, research studies, test censuses, and other experiences to provide advice and recommendations for the 2010 census, the American Community Survey, and related decennial programs.

3. The Committee functions solely as an advisory body under the Federal Advisory Committee Act.

4. The Committee reports to the Director of the Census Bureau.

Membership

1. Members are appointed by and serve at the discretion of the Secretary of Commerce.

2. Members are appointed to the nine-member Committee for a period of three years. Members will be reevaluated at the conclusion of the three-year term with the prospect of renewal, pending Advisory Committee needs and the Secretary's concurrence. Committee members are selected in accordance with applicable Department of Commerce guidelines. The Committee aims to have a balanced representation, considering such factors as geography, gender, technical expertise, community involvement, and knowledge of census procedures and activities. The Committee aims to include members from diverse backgrounds, including State and local governments, academia, media, research, community-based organizations, and the private sector. No employee of the Federal government can serve as a member of the Committee. Meeting attendance and active participation in the activities of the Advisory Committee are essential for sustained Committee membership.

Miscellaneous

1. Members of the Committee serve without compensation, but receive reimbursement for Committee-related travel and lodging expenses.

2. The Committee meets at least once a year, budget permitting, but additional meetings may be held as deemed necessary by the Census Bureau Director or Designated Federal Official. All Committee meetings are open to the public in accordance with the Federal Advisory Committee Act.

Nomination Information

1. Nominations are requested as described above.

2. Nominees should have expertise and knowledge of the cultural patterns and issues and/or data needs of Native Hawaiian and Other Pacific Islander communities. Such knowledge and expertise are needed to provide advice and recommendations to the Census Bureau on how best to enumerate the Native Hawaiian and Other Pacific Islander populations and obtain complete and accurate data on these populations. Individuals, groups, or organizations may submit nominations on behalf of a potential candidate. A summary of the candidate's qualifications (résumé or curriculum vitae) *must* be included with the nomination letter. Nominees must have the ability to participate in Advisory Committee meetings and tasks. Besides Committee meetings, active participation may include Committee assignments and participation in conference calls and working groups.

3. The Department of Commerce is committed to equal opportunity in the workplace and seeks diverse Committee membership.

Dated: January 15, 2004.

Charles Louis Kincannon,

Director, Bureau of the Census.

[FR Doc. 04–1184 Filed 1–20–04; 8:45 am]

BILLING CODE 3510–07–P

DEPARTMENT OF COMMERCE

Bureau of the Census

Request for Nominations of Members To Serve on the Census Advisory Committee on the Hispanic Population

AGENCY: Bureau of the Census, Commerce.

ACTION: Notice of request for nominations.

SUMMARY: Pursuant to the Federal Advisory Committee Act (5 United States Code (U.S.C.) Appendix 2, section 10(a)(b)), the Bureau of the Census (Census Bureau) requests nominations of individuals to the Census Advisory Committee on the Hispanic Population. The Census Bureau will consider nominations received in response to this request for nominations, as well as from other sources. The **SUPPLEMENTARY INFORMATION** section for this notice provides committee and membership criteria.

DATES: Please submit nominations by February 20, 2004.

ADDRESSES: Please submit nominations to Ms. Jeri Green, Chief, Census Advisory Committee Office, Bureau of the Census, Department of Commerce, Room 3627, Federal Building 3, Washington, DC 20233, or by fax to (301) 457–8608.

FOR FURTHER INFORMATION CONTACT: Ms. Jeri Green, Chief, Census Advisory Committee Office, at the above address or by telephone at (301) 763–2070.

SUPPLEMENTARY INFORMATION: The Committee was established in accordance with the Federal Advisory Committee Act (title 5, U.S.C., Appendix 2) in 1995. The following provides information about the Committee, membership, and the nomination process.

Objectives and Duties

1. The Committee provides an organized and continuing channel of communication between Hispanic communities and the Census Bureau. Committee members identify useful strategies to reduce the differential undercount for the Hispanic population and ways data can be disseminated for maximum usefulness to the Hispanic population.

2. The Committee draws upon prior decennial planning efforts, research studies, test censuses, and other experiences to provide advice and recommendations for the 2010 census, the American Community Survey, and related decennial programs.

3. The Committee functions solely as an advisory body under the Federal Advisory Committee Act.

4. The Committee reports to the Director of the Census Bureau.

Membership

1. Members are appointed by and serve at the discretion of the Secretary of Commerce.

2. Members are appointed to the nine-member Committee for a period of three years. Members will be reevaluated at the conclusion of the three-year term with the prospect of renewal, pending Advisory Committee needs and the Secretary's concurrence. Committee members are selected in accordance with applicable Department of Commerce guidelines. The Committee aims to have a balanced representation, considering such factors as geography, gender, technical expertise, community involvement, and knowledge of census procedures and activities. The Committee aims to include members from diverse backgrounds, including State and local governments, academia, media, research, community-based organizations, and the private sector. No employee of the Federal government can serve as a member of the Committee. Meeting attendance and active participation in the activities of the Advisory Committee are essential for sustained Committee membership.

Miscellaneous

1. Members of the Committee serve without compensation, but receive reimbursement for Committee-related travel and lodging expenses.

2. The Committee meets at least once a year, budget permitting, but additional meetings may be held as deemed necessary by the Census Bureau Director or Designated Federal Official. All Committee meetings are open to the public in accordance with the Federal Advisory Committee Act.

Nomination Information

1. Nominations are requested as described above.

2. Nominees should have expertise and knowledge of the cultural patterns and issues and/or data needs of the Hispanic community. Such knowledge and expertise are needed to provide advice and recommendations to the Census Bureau on how best to enumerate the Hispanic population and obtain complete and accurate data on this population. Individuals, groups, or organizations may submit nominations on behalf of a potential candidate. A summary of the candidate's qualifications (résumé or curriculum vitae) *must* be included with the nomination letter. Nominees must have the ability to participate in Advisory Committee meetings and tasks. Besides Committee meetings, active participation may include Committee assignments and participation in conference calls and working groups.

3. The Department of Commerce is committed to equal opportunity in the workplace and seeks diverse Committee membership.

Dated: January 15, 2004.

Charles Louis Kincannon,

Director, Bureau of the Census.

[FR Doc. 04–1185 Filed 1–20–04; 8:45 am]

BILLING CODE 3510–07–P

DEPARTMENT OF COMMERCE

National Institute of Standards and Technology

National Telecommunications and Information Administration

[Docket No. 040107006–4006–01]

Request for Comments on Deployment of Internet Protocol, Version 6

AGENCIES: National Institute of Standards and Technology, National Telecommunications and Information Administration, U.S. Department of Commerce.

ACTION: Notice of inquiry.

SUMMARY: The President's National Strategy to Secure Cyberspace directed the Secretary of Commerce to form a task force to examine the issues implicated by the deployment of Internet Protocol version 6 (IPv6) in the United States. As co-chairs of that task force, the Commerce Department's National Institute of Standards and Technology (NIST) and the National Telecommunications and Information Administration (NTIA) invite interested parties to comment on a variety of IPv6-related issues including: (1) The benefits and possible uses of IPv6; (2) current domestic and international conditions regarding the deployment of IPv6; (3) economic, technical and other barriers to deployment of IPv6; and (4) the appropriate role for the U.S. government in the deployment of IPv6. Comments should be submitted on paper and, where possible, in electronic form as well. All comments submitted in response to this Notice will be posted on the NTIA Web site.

DATES: Interested parties are invited to submit comments no later than March 8, 2004.

ADDRESSES: Comments may be mailed to the Office of Policy Analysis and Development, National Telecommunications and Information Administration, Room 4725, Attention: Internet Protocol, Version 6 Proceeding, 1401 Constitution Ave., NW., Washington, DC 20230. Parties should submit an original and five (5) copies. Where possible, parties should include a diskette or compact disk in ASCII, WordPerfect (please specify version) or Microsoft Word (please specify version) format. Diskettes or compact disks should be labeled with the name and organizational affiliation of the filer, and the name and version of the word processing program used to create the document. In the alternative to a diskette or compact disk, comments may be submitted electronically to the following electronic mail address: *IPv6@ntia.doc.gov.* Comments submitted via electronic mail should also be submitted in one or more of the formats specified above.

FOR FURTHER INFORMATION CONTACT: Alfred Lee, Office of Policy Analysis and Development, at (202) 482–1880. Media inquiries should be directed to the Office of Public Affairs, National Telecommunications and Information Administration, at (202) 482–7002.

SUPPLEMENTARY INFORMATION:

I. Background

A. The Internet Protocol

The Internet Protocol (IP) is a technical standard that enables computers and other devices to communicate with each other over networks, many of which interconnect to form the Internet. By providing a common format for the transmission of information across the Internet, IP facilitates communication among a variety of disparate networks and devices. This ability to communicate with a single, widely accepted format has been a key to the rapid growth and success of the Internet.[1]

The current generation of IP, version 4 (IPv4), has been in use for more than twenty years, and has supported the Internet's phenomenal growth over the last decade. A variety of stakeholders, through the guiding efforts of the Internet Engineering Task Force (IETF), have developed a newer version of IP, known as IPv6, which has several advantages over IPv4, including the availability of many more Internet

[1] *See, e.g.,* Barry M. Leiner, et al, ''A Brief History of the Internet,'' *http://www.isoc.org/internet/history/brief.shtml.* This document describes the development of the Internet and explicitly describes the original decision to use IP in a widespread manner. *See http://www.isc.org/ds/host-count-history.html* for statistics on the rapid growth of Internet hosts.

addresses and additional user features and applications.[2] IPv6 has also been designed to provide other features and capabilities such as improved support for hierarchical addressing, a simplified header format, improved support for options and extensions, additional auto-configuration and reconfiguration features, and native security features.[3]

B. Commerce Department Task Force

In light of the potential benefits of IPv6, especially the security implications, the President's National Strategy to Secure Cyberspace directed the Secretary of Commerce to:

> [F]orm a task force to examine the issues related to IPv6, including the appropriate role of government, international interoperability, security in transition, and costs and benefits. The task force will solicit input from potentially impacted industry segments.[4]

In response, the Commerce Department formed a task force to study IPv6 and to prepare a report of its findings and recommendations. The task force is co-chaired by the Administrator of the National Telecommunications and Information Administration (NTIA) and the Director of the National Institute of Standards and Technology (NIST) and consists of staff from these two agencies. The task force will operate in consultation with the Department of Homeland Security and with other federal offices and agencies, as appropriate.

The task force is in the process of gathering information from a variety of sources, including this request for comment, survey research, and a public roundtable meeting to be held in the first half of 2004. Prior to the public meeting, the task force intends to release an interim report, which will be discussed at the meeting.

C. Request for Comment

By issuing this request for comment, the task force wants to develop a record on the following broad questions, which are set forth in greater detail below: (1) What are the potential uses and benefits of IPv6; (2) what are the costs associated with deploying IPv6; (3) what are the current and projected penetration rates of IPv6; and (4) what is the appropriate role for the U.S. government in the deployment of IPv6?

In answering the questions posed in this request for comment, we urge commenters to provide specific, empirical data and underlying assumptions whenever possible. We also request commenters to supply us with any technical reports or economic analyses that they cite to or rely on in their comments. We further ask commenters, where appropriate, to address how their responses vary, if at all, among different customer markets for communications services and products (*e.g.,* small and medium enterprises, large enterprises, academia, civilian government, military, individual users, and any other relevant segments).

II. Potential Benefits and Uses of IPv6

We seek comment on the potential benefits and uses of IPv6. As described below, some of the potential benefits commonly associated with IPv6 include a significant increase in the number of available Internet addresses, a proliferation of new applications building on peer-to-peer communications, and improved security. We request comment on these and other possible benefits related to widespread adoption of IPv6. We request comment on the benefits accruing to both end users and system providers.

A. Increased Address Space

One of the most commonly cited benefits of IPv6 is the vastly expanded number of individual addresses that IPv6 will enable. IPv4 uses a 32-bit IP address scheme that allows more than 4 billion individual addresses to be identified on the Internet. With the explosive growth rate of Internet users and new applications over the last decade, concerns have been raised that the currently defined IPv4 address space may not be sufficient to meet the needs of the growing Internet user base.[5] By expanding the existing IP address field to 128 bits, IPv6 offers a vast pool (3.4 x 10^{38}) of assignable Internet addresses. As a result, IPv6 can enable an enormous number of new nodes and users to be connected to the Internet using their own unique Internet addresses.

The task force requests comment on the adequacy of IPv4 address space. Specifically, we seek estimates (and underlying assumptions) of how many IPv4 addresses have been allocated, how many are still available, and how long the remaining addresses will be sufficient to meet the needs of users in the United States, as well as users in other countries around the world.[6] We recognize that, because a large portion of the available IPv4 addresses have been allocated to North America, concerns regarding address availability may differ depending on the commenter's perspective. We therefore ask commenters to discuss how the purported limitations on IPv4 addresses will affect different geographic regions (*e.g.,* North America, Europe, Asia) and customer markets (*e.g.,* private sector, government, academia).

The task force also seeks comment on the potential uses for this greatly expanded pool of addresses. What new products, services, features, applications and other uses are likely to result from the additional addresses offered by IPv6? To the extent possible, commenters should provide estimates and underlying assumptions of the economic impact of these new uses and should identify which market segments will be affected by these uses.

The task force understands that the use of Network Address Translation devices (NATs) and the adoption of address conservation practices, such as

[2] Background information concerning the history of the Internet can be found at *http://www.isoc.org/internet/history/*. IETF efforts to transition from IPv4 to a successor protocol standard are described in S. Bradner, ''The Recommendation for the IP Next Generation Protocol'', RFC 1752 (Jan. 1995), *http://www.ietf.org/rfc/rfc1752.txt?number=1752.* Because of the vast amount of widely available resources that provide information on IPv6 and related topics, only representative citations are contained herein for the purpose of facilitating responses to this Notice. Commenters are requested to cite, as appropriate, specific references in support of comments submitted.

[3] For the purposes of this Notice, IPv6 can be defined with reference to IETF Request for Comments (RFCs) that contain the relevant standards. *See http://www.ietf.org* for updated information on this matter. Within the IETF, the IP Next Generation (IPng) Working Group developed IPv6, including the ''core'' draft standards approved in August 1998 (*i.e.,* RFCs 2460, 2461, 2462, 2463). To date, more than 70 RFCs comprise the suite of IETF documents that define IPv6. While the IETF continues to standardize IPv6, and a wide range of related efforts are being undertaken by other organizations (*e.g.,* the IPv6 Forum), the essential features of IPv6 appear to be well established and manufacturers already have a range of IPv6 compatible products available in the marketplace.

[4] The National Strategy to Secure Cyberspace, A/R 2–3, at 30 (Feb. 2003), *http://www.whitehouse.gov/pcipb/cyberspace_strategy.pdf.*

[5] IETF RFC 1752 (*see* note 2, *supra*) estimates that IPv4 address space will be exhausted ''between 2005 and 2011'' and notes relevant assumptions underlying this estimate, which was made in 1993. While estimated dates for potential exhaustion of the IPv4 address space vary widely, a calculation made more recently by Christian Huitema purports to confirm the RFC 1752 timeframe projection. In his view, ''we are again facing a crisis. We must either deploy IPv6 or risk a strange evolution of the Internet toward a set of disconnected networks.'' Christian Huitema, *Routing in the Internet* 366 (2d ed. 2000). Information relating to allocation of IPv4 and IPv6 addresses is provided by the American Registry for Internet Numbers (ARIN). *See, e.g. http://www.arin.net/announcements/20031027_ipv4.html. See also Mark McFadden and Tony Holmes,* ''Report of the Ad Hoc Group on Numbering and Addressing'' (Mar. 2001), *http://www.icann.org/committees/adhoc/mcfadden-holmes-report-08mar01.htm.*

[6] *See, e.g.,* Geoff Huston, ''IPv4 Address Lifetime Expectancy—2003 *http://www.apnic.net/community/presentations/docs/ietf/200307/v4-lifetime-20030715.ppt.*

Classless Inter-Domain Routing (CIDR), have slowed the consumption of available IPv4 addresses. We seek comment on the accuracy of this understanding. While the adoption of NATs over the last decade has apparently slowed the consumption of IPv4 addresses, we understand that NATs have contributed to the development of separate, privately addressed networks that are interconnected with the public Internet. Because NATs act as gateways between the public Internet and users with private network addresses, each NAT device could potentially represent a single point of failure for traffic moving between a privately addressed network and the public Internet. We seek comment on the effects that NATs (as well as CIDR and other address conservation strategies) may have on network performance and network reliability.

B. Purported Security Improvements

The task force seeks comment on the ability of IPv6 to improve the security of information transmitted over IP networks. In general, we ask commenters to address any characteristics of IPv6 that directly or indirectly enhance network security compared to IPv4. Conversely, we also seek comments on any features of IPv6 that may degrade network security compared to IPv4.

We also seek specific comment on Internet Protocol Security Architecture, or IPsec, as it relates to an examination of the relative merits of IPv4 and IPv6. IPsec is a data security specification that is designed to protect the integrity and confidentiality of data traffic carried over the Internet.[7] We understand that while IPsec in IPv4 is functionally equivalent to that available in IPv6, IPsec support is optional in IPv4 networks. Because IPsec is a standard feature of IPv6, will IPsec be easier to use with IPv6 than with IPv4 and, therefore, more widely used? If IPv6 adoption leads to the elimination of NAT devices on the Internet, is it more likely that IPsec will work better as a widely used, end-to-end security mechanism? Are there critical IPsec implementation issues that are independent of the version of IP employed? To what extent will a successful IPsec implementation depend on the development of workable trust models that deal adequately with issues such as public-key management and the adoption of effective security policies? The task force requests comment on these and any other issues involving IPsec, relevant to the growth of IPv6.

We understand that IPsec also permits address authentication, thereby assuring the recipient that a particular message is actually coming from the purported addressor. We seek comment on whether this feature could potentially deter ''spoofing'' attacks or could facilitate tracing of undesirable messages.[8] Specifically, interested parties should explain how implementation of IPv6 or IPsec will accomplish those ends. As noted, moreover, IPsec is also available in IPv4. To what extent would deployment of IPv6 further national security and law enforcement interests over and above the security features and capabilities available via IPv4? The task force also understands that persons sending messages via the Internet can attempt to conceal their identities and addresses by, for example, operating through anonymous servers and relays operating at multiple protocol layers (*e.g.*, NATs, mailrelays, proxies). Assuming that ''network traceability'' is an important objective in cyber security, to what extent would adoption of IPv6 improve the ability of network operators and law enforcement officials to identify accurately the true source of malicious or illegal network activity?

C. End User Applications

Apart from its expanded addressing capabilities and purported security improvements, we understand that IPv6 has also been designed to address other important user needs, including reducing network management burdens, simplifying mobile Internet access, and meeting quality of service needs. We ask commenters to explain whether and how IPv6 accomplishes these and other functions in a manner superior to IPv4. We also request that commenters explain the importance or value of the improved capabilities afforded by IPv6. To the extent possible, we ask that commenters provide examples of how these improved capabilities of IPv6 could benefit current users of IPv4 (*e.g.*, cost savings, time savings).

One potential benefit of IPv6 is that its increased address space may further an original vision of the Internet. The task force understands that the Internet address space was originally designed to be a unified open scheme, connecting all users and nodes (each with its own unique address), as defined by the IPv4 addressing convention. A central idea was to allow users to communicate and run applications (*e.g.*, Voice over IP (VoIP), gaming, or file exchange) with each other, across the Internet, on a peer-to-peer basis. Interested parties are encouraged to comment on the desirability and potential effort required to return the Internet to a unified open scheme as originally designed.

As noted above, the use of NATs has contributed to the development of separate, privately addressed networks that are interconnected with the public Internet. At the same time, various other devices are apparently being deployed throughout the Internet to increase network functionality. Such devices, often referred to as ''middleboxes,'' appear to be proliferating in response to demand for capabilities that may include not only network address translation, but also firewall protection, intrusion detection systems, and other features.[9] There is some concern that use of NATs and other middleboxes may block or inhibit the growth of peer-to-peer applications. Some observers assert that deployment of IPv6, by vastly increasing the available address space, will eliminate the need for NATs in particular, which, in turn, could lead to a proliferation of new peer-to-peer applications. On the other hand, NATs and other middleboxes may persist in an IPv6 environment because they may be useful for other reasons, including affording users some protection from hackers launching attacks across the public Internet. We request comment on these and any other issues involving NATs (or their equivalents) and middleboxes, related to the growth of IPv6.

[7] *See, e.g.*, Pete Loshin, ''Securing the Internet with IPsec (Internet Security Architecture),'' *Earthweb* (Sept. 9, 1999), *http://itmanagement.earthweb.com/erp/article.php/615921.* This article provides background information on IPsec and its operation with IPv4 and IPv6. The task force notes that IPsec is only one method of protecting the security of private communications. Interested parties are encouraged to comment on the availability of other data security specifications and their effectiveness at protecting the security interests of users, providers, and government, as compared to IPsec.

[8] ''Spoofing'' refers to the creation of Internet packets using someone else's Internet address. *See, e.g.*, Matthew Tanase, ''IP Spoofing: An Introduction,'' *http://www.securityfocus.com/infocus/1674.*

[9] *See, e.g.*, M. Lerner, *et al.*, *Middleware Networks: Concept, Design, and Deployment of Internet Infrastructure* (2000). In this document, the term ''NAT device'' refers to equipment that performs only network address translation. We use the term ''middleboxes'' in this Notice to describe a broader category of equipment, which could encompass NAT devices and other equipment that provide a variety of capabilities including, but not necessarily, network address translation. For a discussion of thee potential effects of NATs and middleboxes on end-to-end Internet connectivity, see David Margulius, ''The Threat to Universal Internet Connectivity,'' *InfoWorld*, Nov. 21, 2003, *http://www.infoworld.com/article/03/11/21/46FEtrouble_1.html.*

Notwithstanding the criticisms of NATs, some have argued that NATs will not preclude peer-to-peer devices and applications.[10] The task force requests comment on the accuracy of this assertion. Similarly, we seek comment on the effects of middleboxes on the availability and efficacy of peer-to-peer devices and applications. If NATs or middleboxes do interfere with peer-to-peer interactions, can ''work arounds'' be developed for particular applications? If work arounds can be developed, to what extent will they adversely affect the performance of the associated applications? Will those work arounds scale well (*i.e.*, continue to function seamlessly and efficiently as the number of applications and users increases)? As importantly, what additional costs (in time, money, and complexity) will firms incur to develop work arounds for particular applications in order to accommodate NATs and middleboxes?

D. Network Evolution

Although the task force requests comments on the potential benefits of IPv6, we understand that IPv4 networks can incorporate many of the features and capabilities commonly associated with IPv6. Thus, some observers have claimed that the increase in address space afforded by IPv6 is the only compelling reason for adopting the new protocol, not the availability of other capabilities.[11] The task force seeks comment on this assertion. Specifically, the task force requests comment on the ease with which each feature and capability associated with IPv6 can be implemented over IPv4 networks and whether IPv4 implementations will perform as effectively as IPv6 networks. Will IPv4 networks providing IPv6-associated features and capabilities suffer a performance penalty as compared to IPv6 networks? We request comment on whether any IPv6 feature or capability cannot be readily implemented over IPv4 networks. We ask commenters to identify the cost of implementing such features or capabilities on IPv4 networks, as compared to the cost of implementing IPv6 alternatives? We request comment on whether any IPv6 feature or capability, or set of features or capabilities is markedly superior to its IPv4 alternative, in terms of implementation cost or relative performance, such that an IPv6 implementation would be the clearly preferred choice over IPv4.

The task force also seeks comment on whether there are any potential performance impairments associated with the adoption of IPv6. For example, would the increased size of the IPv6 header have a significant impact on voice quality in VoIP applications, which are generally sensitive to latency? If, for example, IPv6 header compression schemes are used to mitigate potential performance issues (*e.g.*, increased transmission latency), do such schemes require more router processing effort resulting in increased end-to-end latency? To be widely implemented, does IPv6 require new routing technologies (*e.g.*, new versions of BGP–4) that could result in significant end-to-end system design and operational challenges? Are there any drawbacks due to inherent limitations of the IPv6 protocol design? Are there drawbacks resulting from immature or (currently) impractical hardware and software IPv6 implementation technologies?

We understand that the deployment of IPv4 networking infrastructure continues to evolve in ways that can effectively use existing and emerging transport and transmission system infrastructures (*e.g.*, multi-protocol label switching (MPLS), asynchronous transfer mode (ATM), Frame Relay, optical, wireless, digital subscriber line (DSL), ethernet). Does IPv6 deployment depend on modifications to these underlying networks or require new transport and transmission systems to be implemented? Will IPv6 be able to utilize presently underused capabilities of transport and transmission networks to support new types of applications or to provide more efficient networking services for existing applications? We also seek comment on any spectrum management issues that might arise when IPv6-based wireless and hybrid networks are used to support mobile and fixed applications. Because IPv6 offers new capabilities, do the transport layers (*e.g.*, transmission control protocol (TCP), user data protocol (UDP)) need to be modified to support both existing and new applications? Further, we request comment on whether and to what extent the transport layers need to be modified in order to realize the full capabilities of IPv6, including the potential for significantly improved IP network performance.

E. Other Benefits and Uses

The task force seeks comment on the range, attractiveness, and potential economic impact of new services that will emerge with the growth of IPv6. Specifically, what new service possibilities does IPv6 provide beyond those available using IPv4? We also ask commenters to identify other benefits and uses of IPv6 and to describe the potential economic and other impacts of such developments. For example, does VoIP represent the kind of application that could drive IPv6 adoption, and if so, how? Will IPv6 improve the performance of VoIP? Please identify other applications that could drive or benefit from the adoption of IPv6. Are there applications that could thrive with only a partial implementation of IPv6?

III. Cost of IPv6 Deployment and the Transition From IPv4 to IPv6

The task force seeks information on the factors that may cause individuals and organizations to adopt IPv6 and, most importantly, the costs of doing so and the transitional issues presented. We encourage interested parties to provide us with specific detail, to the extent possible, on their IPv6 deployment strategies. What factors influence an organization's decision to adopt IPv6? For example, is there a certain level of IPv6-based traffic that will cause network operators or ISPs to convert their facilities to IPv6? Is there a critical point at which consumers' acquisition and use of IPv6-capable terminal equipment and applications will drive deployment of IPv6-capable infrastructure? To what extent, if at all, do these factors vary by provider (*e.g.*, network operator, ISP, equipment vendors, applications providers) and by market segment (*e.g.*, small and medium enterprises, large enterprises, academia, civilian government, military, individual users, and any other relevant segments)? As importantly, why are certain organizations choosing not to implement IPv6 at this time?

A. Cost of Deploying IPv6

The task force seeks specific data on the hardware, software, training, and other costs associated with implementation of IPv6. In responding to the questions below, we ask commenters to discuss the extent to which any of these costs may vary by market segment. They should also

[10] *See, e.g.*, Dan Jones, ''European IPv6 Plan Comes Under Fire,'' *Light Reading*, at 2 (Mar. 7, 2002) (citing statement of Paul Francis, inventor of the NAT).

[11] *See, e.g.*, Geoff Huston, ''Waiting for IP version 6'', at 9, *The ISP Column* (Jan., 2003); John Klensin, ''A Policy Look at IPv6: A Tutorial Paper,'' at 17 (Apr. 2003). *Contra* Latif Ladid and Jim Bound, ''Response by IPv6 Forum,'' *The ISP Column* (Jan. 2003). Claimed benefits of IPv6, including but not limited to resolution of IPv4 address depletion issues, are discussed in an IETF work in progress that outlines the business and technical case for IPv6. See S.King, *et al.*, ''The Case for IPv6 (Dec.1999). A wide range of potential IPv6 benefits are described in *http://www.ipv6forum.com/navbar/papers/IPv6-an-Internet-Evolution.pdf*, which was prepared by the IPv6 Forum, a leading global proponent of IPv6 deployment.

discuss whether and to what extent the costs might vary depending on the nature of the IPv6 implementation (*e.g.*, a ''greenfield'' implementation versus one that overlays or replaces an embedded IPv4 base)? To what extent do the IPv6 costs vary with the size of the embedded IPv4 base? In instances where IPv6 capabilities are already deployed, what factors must be present to ''turn on'' existing IPv6 functionality?

1. Hardware Costs

Deploying IPv6 on a national scale will require a substantial replacement and/or upgrading of existing IPv4 equipment. The task force solicits comments on the nature and magnitude of the costs of deploying IPv6, including the likely time period over which those costs will be incurred. For example, routers, hosts, servers, and terminal equipment presumably will have to be replaced or modified in order to originate, transport, and receive IPv6 traffic. If only modifications are required, will they involve hardware changes (*e.g.*, router line cards)? What are the likely costs of those changes? What additional costs will be incurred (*e.g.*, training/retraining costs, transition testing on operational functionality and performance)? Will the premises equipment that enables broadband transmission services (*e.g.*, DSL and cable modems) need to be replaced or modified in order to carry IPv6 traffic and, if so, at what cost?

As embedded IPv4 equipment reaches the end of its useful life, users will presumably need to acquire replacements. What are the useful lives of the various categories of such equipment (*e.g.*, routers, servers, premises equipment) and how has the duration of those lives changed over time? Are there differences between the technical and economic lives of particular equipment that may have a bearing on the decision to move from IPv4 to IPv6? When the time comes to replace existing IPv4 equipment, will the relative costs be such that users will tend to purchase IPv6-capable equipment? Or will the added direct and indirect costs (*e.g.*, operating, and administrative costs) of purchasing IPv6 equipment induce users to stay with IPv4-compatible equipment and applications? Will manufacturers continue to produce equipment and applications that can handle only IPv4 packets? What market conditions would persuade manufacturers to cease offering IPv4 equipment?

2. Software Costs

To what extent will the modifications to routers, hosts, servers, and terminal equipment mentioned above involve only software changes? What is the likely magnitude of those costs? Will various applications and Internet services (*e.g.*, search engines, content delivery networks, DNS) have to be modified to make them compatible with IPv6 transmission? What are the estimated costs of those changes? Will the necessary modifications to software and applications require extensive changes in the underlying coding and, if so, at what cost? Are there differences in the useful life and cost of software, as compared to hardware, that make it likely that firms will acquire and implement IPv6 software and applications before IPv6 hardware, or vice versa?

3. Training Costs

An organization's personnel will have to be trained in how to install, operate, maintain, and service IPv6 hardware and software. How much will that training cost? How do training costs compare (*e.g.*, in percentage terms) to the costs of IPv6 hardware and software? To what extent does the likely costs of training influence an organization's decision to adopt IPv6?

4. Other Costs

What are the opportunity costs of waiting to deploy IPv6? [12] To what extent will these costs vary by market segment (*e.g.*, small and medium enterprises, large enterprises, academia, civilian government, military, individual users, and any other relevant segments)? How will the transition path of the U.S., relative to the rest of the world, influence costs and prices of IPv6 equipment, services, and applications? For example, will costs and prices decrease over time as a function of the worldwide IPv6 installed base? Could waiting for international development and deployment of IPv6 lead to reduced R&D costs and fewer security problems for U.S. adopters? Would the U.S. benefit from lessons learned by early adaptors or will there be minimal knowledge spillovers? Conversely, will late entry into global IPv6 markets by U.S. firms have a significant long-term negative effect on market shares and economic performance? What is the impact of slow IPv6 deployment on the development of native IPv6 applications?

[12] The ''opportunity cost'' of an action or choice is the net benefits associated with the next best alternative to the course of action adopted. For a more complete discussion of opportunity cost, see Michael Parkin, *Economics* 10, 53–56 (1990).

B. Transition Costs and Considerations

1. Migration From IPv4 to IPv6 and the Coexistence of Dual Protocols

As our nation migrates from IPv4 to IPv6, there will be a period of time during which IPv4 and IPv6 operate simultaneously. The task force seeks comment on the costs and any other issues related specifically to this migration from IPv4 to IPv6. For example, what are the costs, burdens, and potential problems of ensuring interoperability between IPv6 and IPv4 networks? What are the incremental costs resulting from operating IPv6 and IPv4 concurrently? To what extent will various interoperability solutions continue to function efficiently and effectively as traffic increases? Does the operation of dual IPv4/IPv6 equipment impose significant costs relative to IPv4 or IPV6-only equipment? To what extent do measures to ensure interoperability reduce the performance of network routers, increase routing tables, or have other adverse effects?

Many observers assume that, regardless of the pace of IPv6 deployment, there will be significant ''islands'' of IPv4 for the foreseeable future.[13] There appear to be several transition mechanisms to allow interoperability among IPv4 and IPv6 hosts and networks, including dual stack, tunneling IPv6 over IPv4 networks, and IPv6-only to IPv4-only translation. What are the costs and benefits of each of these mechanisms? Is there a ''best'' or accepted approach that will provide for interoperability between islands of IPv4 and/or IPv6 and the Internet at large? What factors may determine whether and where alternative transition mechanisms will be available and applicable? Can alternative transmission mechanisms co-exist while still providing end-to-end interoperation among IPv6 and IPv4 networks? Does the embedded base of IPv4 equipment and applications function as a barrier that could isolate the U.S. from the benefits of foreign IPv6 deployments and/or testbeds?

The task force recognizes that industry groups have worked hard to ensure interoperability between IPv4 and IPv6 networks and applications. Will domestic and international market forces alone produce a level of network interoperability that maximizes overall social welfare, or will government intervention be needed to produce such

[13] 13 *See, e.g.*, Eric Carmés, ''The Transition to IPv6'' (Internet Society Briefing #6), *http://www.isoc.org/briefings/006/*, which describes transitional mechanisms for IPv6 and briefly discusses problems inherent with the coexistence of IPv4 and IPv6 networks.

an outcome? If government intervention is needed, what form should it take?

What problems, if any, may arise when existing IPv4 networks convert hardware, appliances and middleware to IPv6? Will applications that use IP services migrate easily? Are there estimates of the cost associated with these issues? On the other hand, implementation of IPv6 (as distinct from gains anticipated via the definition of the new protocol) could also yield substantial hardware and software advances. Currently, IPv4 operates on top of several protocol layers (*e.g.*, MPLS, ATM, frame relay, ethernet and wireless). Commenters are requested to explain how the technical requirements for these protocol layers and dependencies of protocol layers supported by IPv4 (*e.g.*, UDP and TCP) may be impacted by the use of IPv6.

The task force seeks comment on the adequacy of the existing set of IETF standards for IPv6. Is the current set of IETF standards for IPv6 technically complete enough to enable widespread commercial deployment of interoperable IPv6 (and IPv4/IPv6 transition mechanisms) networks, equipment and applications? Would it be helpful for the IETF standards-track RFCs to define ''mandatory'' services (*e.g.*, protocol capabilities) and ''optional'' services? What problems, if any, may arise in implementing IPv6, as embodied by the IETF standard set, in various types of equipment and software? Will the standards create undue hardship on equipment and software providers? Are additional industry or government specifications required to successfully realize the potential benefits of IPv6?

2. Security in Transition

Among the IPv6-related issues that the National Strategy to Secure Cyberspace directs us to study is ''security in transition,'' the need to ensure that security interests are protected during transition from IPv4 to IPv6. To what extent would the simultaneous operation of IPv4 and IPv6 networks and applications, potentially interconnected by a set of diverse transition mechanisms, compromise efforts to safeguard the integrity and security of communications traffic, or limit government's ability to protect legitimate security and law enforcement interests?

3. Other Transition Concerns

Proper Internet address allocation is achieved through a network of national (*i.e.*, the American Registry for Internet Numbers (ARIN)) and international (*i.e.*, Reseaux IP Europeens Network Coordination Centre (RIPE–NCC) and Asia Pacific Network Information Centre (APNIC)) organizations that are authorized by the Internet Corporation for Assigned Names and Numbers (ICANN) to administer numbering and addressing. Does the deployment of IPv6 create address allocation issues for any market segment? How will allocations to end users and end-user devices be affected by IPv6 deployment? Will small and mid-sized ISPs and IT firms have equitable access to the addresses they need? Are the existing national and international registries technically capable of handling administrative tasks required for IPv6 numbering and addressing? If not, identify the tasks and the costs for registries to be made capable of handling IPv6 related administrative tasks.

IV. Current Status of Domestic and International Deployment

A. Appropriate Metrics To Measure Deployment

Efforts to deploy IPv6 commercially are relatively recent phenomena. Notwithstanding the nascent nature of the IPv6 market, the task force seeks to develop an understanding of how the market is evolving across regions (both domestically and internationally) and among user groups (*e.g.*, government, industry, academia). What are the most appropriate metrics to gauge IPv6 deployment? Is the quantity of equipment purchased, the number of routers acquired, the number of addresses assigned, the number of hosts with IPv6 operating systems, the number of available applications that are IPv6 or IPv6/IPv4 compatible, or the amount of IPv6 traffic carried sufficient to properly define the IPv6 market? Are there other metrics or some combination of metrics best suited to characterize the domestic and international penetration of IPv6?

The task force is interested in an assessment of the total domestic and international deployment of IPv6. What is the known current volume of deployed native IPv6 and IPv4 network equipment (*e.g.*, hosts, routers, switches)? To what extent does the pace and extent of IPv6 deployment vary from country to country or region to region (*e.g.*, North America vs. Europe vs. Asia)? [14] How is that equipment deployed by market segment? What is the approximate domestic and global value of all deployed IPv4 and IPv6 equipment? What is the percentage (and proportion as compared to IPv4) of known IPv6 deployments by market segment?

B. Private Sector and Government Deployment Efforts

1. Overall Domestic Efforts

The task force seeks specific comment on the status of IPv6 deployment efforts in the United States. First, we seek comment on the availability of IPv6 products and services. Are technology suppliers producing the necessary hardware, software, applications, training, and any other products and services in sufficient quantity to meet the demand for IPv6 in the United States? We ask commenters to identify the relevant product and service categories and to describe the breadth and depth of offerings in those categories. For example, is the market for IPv6 routers characterized by multiple suppliers offering a variety of products, or does only a single supplier produce only a limited number of products? To the extent any relevant products and services are not available or are in limited supply, we seek information about their projected availability in the future, including analysts' estimates and suppliers' business plans.

Second, the task force seeks comment on the actual deployment of IPv6 products and services in the United States. To the extent possible, we ask commenters to provide specific information on the status of IPv6 deployment across product and service categories (*e.g.*, hardware, software) and across customer segments (*e.g.*, private sector, government, academia). For example, how many enterprise network routers are currently IPv6-capable? How many public or backbone network routers are IPv6-capable? How does U.S. router deployment compare with other countries? How many ISPs are currently capable of handling IPv6 traffic? What percentage of Internet access customers receive IPv6 capable services? What proportion of end-user equipment (*e.g.*, computers, wired and wireless end-user devices, cable modems, DSL modems, printers and other peripheral equipment, and other devices) is capable of handling IPv6 packets? To the extent that such capability is only provisioned in such devices, how easy/costly will it be for users to activate that capability? How many of the critical functions within an enterprise are IPv6 enabled (*e.g.*, DNS, wireless firewalls)?

Third, we seek comment on the projected growth of IPv6 products and services in the United States. We ask

[14] *See* Nokia's Chinese website for IPv6 which has compiled a list of IPv6 enabled applications. This information can be viewed at *http://www.ipv6.com.cn/technique/applications.html.*

commenters to provide all relevant assumptions and underlying data that support their growth projections. To the extent possible, we ask commenters to provide growth projections for specific products and services, as well as projections among customer segments.

2. Domestic Government Efforts

The task force seeks comment on federal, state, and local government efforts to deploy IPv6 in the United States. For example, the Department of Defense (DoD) has announced plans to migrate its existing Global Information Grid Network to IPv6 by 2008.[15] Additionally, DoD recently initiated a multivendor testbed, known as ''Moonv6,'' to examine the interoperability of IPv6 equipment, software, and services under real-world conditions. Involving more than 30 networking vendors, testing vendors, and service providers, the project purportedly will be the most substantial test of the IPv6 standard set in North America.[16] We seek comment on any lessons learned to date from DoD's efforts to deploy IPv6 that could be applied to federal civilian agencies, state and local governments, academia, and the private sector. We seek similar comment on other IPv6 research efforts and testbeds, including IPv6 deployments in federal research networks (Fednets),[17] the Abilene backbone network,[18] and any other similar efforts. We ask commenters to identify the costs of these efforts and the expected effects these activities may have on the deployment of IPv6 within the United States?

What is the current state of IPv6 deployment by other federal, state, and local government agencies? What factors have various agencies considered in deciding whether and at what pace to deploy IPv6? How do factors like geographic location, population density and/or available expertise impact the costs/benefits for state and local municipalities that are considering IPv6 deployments? How will the recent DoD requirement that all Global Information Grid assets be IPv6-capable by 2008 affect the procurement plans and decisions of other federal agencies? The task force encourages states and local governments to describe any initiatives or studies that they have undertaken regarding the deployment of IPv6. What is the current state of IPv6 deployment by state and local government agencies? What factors have various agencies considered in deciding whether and at what pace to deploy IPv6? How do factors like geographic location, population density and/or available expertise impact the costs/benefits for state and local municipalities that are considering IPv6 deployments?

3. International Efforts

In addition to domestic IPv6 deployments, the task force seeks comment on international efforts to deploy IPv6. For example, we understand that governments and companies in Asia have been aggressively promoting and adopting IPv6, purportedly because of the growing demand for public Internet addresses in their countries. Japan and Korea plan to have IPv6 fully deployed before the end of this decade.[19] The European Union has developed substantial IPv6 plans and programs to ensure readiness and competitiveness when IPv6 is widely deployed.[20] Additionally, we understand that other countries such as Tunisia are engaged in substantial IPv6 deployments.[21]

The task force requests comment on the current and projected levels of IPv6 deployment across the globe, on both a regional basis (*e.g.*, Europe, Asia, South America) and on a country specific basis, where available. To the extent possible, we ask commenters to provide such information by product category (*e.g.*, hardware, software) and by customer segment (*e.g.*, government, private sector, academia). We also ask commenters to explain how particular initiatives or programs by foreign governments or foreign suppliers have helped (or hindered) IPv6 deployment. For example, have government commitments to reach a specific level of IPv6 deployment by a date certain helped spur deployment? Are governments devoting significant funding for IPv6 deployment efforts? Have government initiatives (of lack thereof) interfered with normal market forces and what are the consequences of those actions or inactions?

V. Government's Role in IPv6 Deployment

The task force seeks to build a public record that addresses two fundamental questions: (1) Should government be involved in fostering or accelerating the deployment of IPv6; and (2) if so, what actions should government undertake? In answering these questions, we ask commenters to build upon their responses to the questions above and to provide specific, empirical evidence, where possible, to support their assertions regarding the proper role of government in IPv6 deployment.

A. Need for Government Involvement in IPv6 Deployment

1. Reliance on Market Forces

As a general matter, government policymakers in the United States prefer to rely on market forces for the large-scale deployment of new technologies. In most cases, reliance on the market tends to produce the most efficient allocation of resources, the greatest level of innovation, and the maximum amount of societal welfare. Accordingly, we seek comment on whether market forces alone will be sufficient to drive a reasonable and timely level of IPv6 deployment in the United States. For example, given commenters' views on the current and predicted rates of IPv6 deployment, do commenters believe those rates demonstrate a sufficient uptake of IPv6 in the United States? We ask commenters to identify the specific reasons for their positions.

2. Potential Market Impediments

Notwithstanding the government's general preference for relying on market forces, there may be impediments in a particular market that warrant corrective action by the government. In this section, the task force seeks comment on whether some of the more common forms of impediments are present in the market for IPv6 products and services.

a. Technological Interdependencies and the ''Chicken and Egg'' Problem

The task force requests comment on whether a ''chicken and egg'' problem exists that could hinder efficient

[15] *See* U.S. Department of Defense, ''Internet Protocol Version 6 (IPv6), *http://www.dod.gov/news/Jun2003/d20030609nii.pdf.*

[16] *See* the Moonv6 Media page at *http://www.iol.unh.edu/moonv6/* to view a presentation that gives more detail about this particular program.

[17] Fednets are networks operated by the National Science Foundation, the Department of Defense, the National Aeronautics and Space Administration, and the Department of Energy. The Fednets coordinate closely to support participating agency missions and R&D requirements. *See* National Science and Technology Council, *High Performance Computing and Communications Information Technology Frontiers for a New Millenium: A Report by the Subcommittee on Computing, Information, and Communications R&D* (2000), *http://www.ccic.gov/pubs/blue00.*

[18] The Abilene Network is an Internet2 high-performance backbone network that enables the development of advanced Internet applications and the deployment of leading-edge network services to Internet2 universities and research labs across the country. *See* abilene.internet2.edu/about/.

[19] *See, e.g.*, a 2002 presentation by Toshihiko Shimokawa entitled ''IPv6 status of Japan,'' which describes the development of IPv6 in Japan, including information on government and private sector activities. This presentation is available at *http://genkai.info/2002–1004/materials/toshi.ppt.* For information about Korea's plans with respect to IPv6, see Gene Kowprowski, ''Internet Protocol for the Future: Ipv6 Poised for Adoption,'' *TechNews World* (Jul. 30, 2003).

[20] *See, e.g., http://www.europa-web.de/europa/03euinf/39INFTEC/ecresult.htm.*

[21] *See http://www.ipv6net.tn/.*

deployment of IPv6 (*i.e.*, disincentives for investment in supporting infrastructure until applications are deployed, matched by disincentives for investment in applications until supporting infrastructure is in place). In the case of IPv6, firms may be reluctant to build IPv6 networks (or to install IPv6 capability in existing IPv4 networks), or to develop and market IPv6 devices, if there are no IPv6 applications that prompt consumer demand for the underlying transmission infrastructure. Similarly, Internet service providers may be reluctant to install IPv6 in the absence of sufficient IPv6 applications. Applications providers, on the other hand, may hold off until the infrastructure is in place to make those applications usable by consumers. We seek comment on whether such a ''chicken and egg'' relationship exists between IPv6 applications and supporting infrastructure, and if so, how that relationship is manifesting itself in the market for IPv6 products and services.

The ''chicken and egg'' problem seems to be most acute when the interrelated products are costly to develop and are highly interdependent (*i.e.*, the end product is a complex and capital intensive system). We seek comment on whether those characteristics are present for IPv6 infrastructure and applications. We also seek comment on how the expected degree of interoperability between IPv6 and IPv4 networks will affect this potential chicken and egg problem. Will the interoperability between IPv6 and IPv4 reduce potential impediments to the synchronized deployment of IPv6 infrastructure and applications, or will that interoperability merely serve to delay decisions to upgrade infrastructure and applications to IPv6? In some instances, government has responded to concerns over potential ''chicken and egg'' problems by playing an active role in the introduction of certain products and services, such as FM radio and HDTV. We request comment on how the deployment of IPv6 compares to other standards-based technology transitions and whether IPv6 presents the same or similar concerns that warrant government action.

b. Monopoly Power

The presence of a firm or group of firms, with monopoly power in the market for IPv6 products or services could create a potential impediment to the efficient deployment of IPv6 in the United States. Although we are not currently aware of any concerns regarding monopoly power, such a situation could arise from the existence of a dominant firm or group of firms in the relevant markets with the incentive to impede normal dissemination of IPv6, either by directly suppressing the technology or by setting excessive prices for IPv6 products and services. We therefore seek comment on whether any firm or firms have monopoly power for IPv6 products and services, and how the exercise of such monopoly power will affect IPv6 deployment in the United States.

To aid in this analysis, we seek comment on the extent to which IPv4 and IPv6 are direct substitutes. If IPv4 and IPv6 are direct substitutes (*e.g.*, if IPv6 equipment and applications compete directly with IPv4-based counterparts for market share), it may be unlikely that providers of IPv6 equipment, applications, and services will be able to charge excessive prices for their products (*i.e.*, prices that exceed any performance differential). Alternatively, if IPv6 builds on IPv4, enabling related but different applications, early entrants into the market may be able to establish sufficient market power to impede adequate competition. Economists, however, generally consider such temporary monopolies to be a normal phase of new technologies' evolution and thus such a pattern may represent an efficient deployment of a new technology and not a market failure. We request comment on these issues.

c. Network Externalities

The presence of network externalities or networking effects could also impede efficient deployment of IPv6.[22] The task force requests comment on whether and to what extent deployment of IPv6 is characterized by network externalities. If so, what is the magnitude of those externalities? In this regard, most observers believe that IPv6-based networks will be interoperable to a considerable degree with embedded IPv4 networks and, therefore, IPv6 users will be able to communicate with IPv4 users in many instances. To what extent does that affect the size or scope and timing of any network externalities associated with deployment of IPv6? Do network externalities arise, if at all, from all IPv6-based services and applications, or are they limited to specific offerings (*e.g.*, gaming services whose value to individual users likely depends on the number of potential opponents)? Given the early state of IPv6 deployment, is it premature to predicate a case for government intervention at this time on the possible existence of network externalities? How important are network externalities in the U.S. market for domestic firms who want to compete in global markets?

Network externalities increase uncertainty (and thereby deter efficient investment decisions) because the returns on a company's investment are dependent on the investment decisions of other companies.[23] In addition, if related applications, or applications and infrastructure are highly complementary, early entrants into a market that is not mature may not be able to realize returns on investment in an acceptable time frame. These factors increase market risk and impede the development and deployment of technologies. A lack of information and documentation regarding benefits and costs also increases market risk. The task force seeks comments on the importance of coordinating the timing of IPv6 migration for achieving efficient market penetration.

d. Other Impediments

In addition to the potential market impediments described above, we seek comment on any other potential market impediments that may hinder IPv6 deployment in the United States. To the extent possible, we ask commenters to provide specific, factual examples of any such impediments and to describe how those impediments are affecting IPv6 deployment.

3. Public Goods

An important role of government is to ensure the adequate provision of ''public goods,'' which market forces alone commonly cannot do.[24] Examples

[22] Network externalities arise from the fact that the value of a network to its users typically increases with the number of people that can access the network. Similarly, networking effects arise from the fact that the value of a network also increases with the number of individuals actually using the network. When a consumer decides whether to purchase and use a networked product or service (such as an IPv6-capable device), that person considers only the personal benefits of that purchase, and ignores the benefits conferred on all other users (*e.g.*, those users who may now have a new opponent in a IPv6-based gaming service). The individual may choose not to purchase the networked product or service, even though that purchase may have increased overall economic welfare. In consequence, deployment of the service (and the equipment and technologies that make that service possible) will be less than it ''should'' be. See Parkin, note 12 supra, at 504–510; Robert Willig, ''The Theory of Network Access Pricing'' in *Issues in Public Utility Regulation* 109 and n.2 (H. Trebbing ed. 1979).

[23] *See, e.g.*, Paul Stone, *The Economics of Technology Diffusion* (2002).

[24] Public goods are characterized by consumption nonrivalry, in that one person's consumption does not reduce the amount of the good available to others. More importantly, public goods are characterized by nonexcludability, in that no individual can be prevented from enjoying the

Continued

of public goods include national defense, law enforcement and clean air. Infrastructures, to varying degrees, also have the characteristics of public goods. Because standards are by definition used collectively by competing and partnering economic agents, they have infrastructure characteristics. In this section, the task force seeks comment on the public good characteristics of IPv6-capable products and services.

a. Security

In section II.B above, we seek comment on the potential security benefits of IPv6. To the extent that commenters believe IPv6 may directly or indirectly facilitate improved IP security, we seek comment on whether security benefits from IPv6 exist that can significantly further the delivery of public goods. For example, could the deployment of IPv6 advance important national security, national defense, and law enforcement interests, which are commonly understood to be public goods? [25] We understand that certain features of IPv6 (*e.g.*, expanded address space, auto-configuration) could enable the military to provide soldiers with equipment that could improve command and control capabilities in the field. Improved auto-configuration could also enable first responders to establish vital communications systems in the event of disaster or national emergency. Does the furtherance of those and any other security-related interests require government action to speed the deployment of IPv6 in the United States? In responding to theses questions, interested parties should explain the specific security interests to be furthered and how they would be advanced by wide scale deployment of IPv6.

The task force also seeks comment on whether the private sector may fail to sufficiently implement IPsec or other security mechanisms, and whether government action to accelerate the deployment of IPv6 could aid private sector security efforts. For example, what conditions could hinder private sector efforts to fashion key management systems and trust mechanisms needed to implement IPsec in an IPv6 environment? To what extent would federal government intervention be useful or necessary to overcome such obstructions?

b. National competitiveness

Given other nations' announced commitments to IPv6, is U.S. government action to support domestic IPv6 warranted and appropriate in order to preserve the competitiveness of U.S. businesses internationally? In this regard, we understand that U.S. firms are currently major providers of IP equipment, services, and applications. We also understand that many have developed or are developing IPv6 capabilities for their products and services. We further understand that some U.S. firms appear to be selling equipment in many of the countries (*e.g.*, Korea, Japan, China) that ostensibly are most committed to IPv6 deployment. Given these understandings, we seek comment on how the competitiveness of U.S. equipment firms and service providers would be adversely affected by slower deployment of IPv6 domestically?

We also understand that use of IPv6-capable networks and applications may increase the efficiency of users of IPv6 infrastructure, potentially allowing them to produce and market their goods and services at lower cost or with higher quality—both domestically and in international markets. Thus, lagging deployment of IPv6 in the United States (with consequent loss of economies of scale and scope) could conceivably reduce the competitiveness of American firms in various export markets vis-à-vis companies from countries that have deployed IPv6 more aggressively. We request comment on this supposition and, particularly, on the nature and magnitude of the cost advantages that use of IPv6 (as opposed to IPv4) may confer on a company in a global market context.

B. Nature of Government Action

In light of commenters' answers provided to the preceding questions, we now seek comment on the type of action or actions, if any, that the government should take regarding IPv6 deployment. Traditional government support for new technologies and technology infrastructures have included R&D support, incentives for investment in equipment, government procurement, and facilitation roles with respect to standards development and deployment. We emphasize that the list of government actions discussed below is not exhaustive, nor are such actions mutually exclusive. We therefore request that commenters provide specific details for any course(s) of action they propose, together with the estimated costs of such action(s).

1. No Government Action

To the extent commenters believe the aforementioned trends and potential market conditions suggest a timely deployment of IPv6 in the U.S., one possible U.S. government action would be to let market forces guide the diffusion of IPv6 into existing and future markets. The task force requests comment on the appropriateness of this non-intervention approach. Commenters should address the potential costs to the U.S. economy if government inaction results in a domestic implementation of IPv6 that lags other industrialized nations.

2. Options for Government Action

We discuss below specific actions that government could take to further deployment of IPv6. As noted above, the approaches discussed are not exhaustive, however, and interested parties are encouraged to identify and outline other potential avenues for government action. If the federal government should elect to spur deployment of IPv6 within the U.S. economy, we also request comments regarding how, when and in what form such action should take. What factors and market information should government consider in order to determine that the market-driven rate of IPv6 deployment in the U.S. is insufficient, thereby necessitating government intervention? Should government intervene early to stimulate deployment? Should it allow the market to drive deployment forward, and concentrate government efforts on assisting or encouraging those individuals and enterprises that are the slowest to adopt IPv6? To what extent, if at all, should the timing of government intervention differ with respect to private sector deployment of IPv6, as compared to its adoption by federal, state and local government?

a. Government as Information Resource

Rather than actively promoting deployment of IPv6, the government could establish programs to assist public and private sector entities in making their deployment decisions. It could, for example, create an information clearinghouse that gathers and disseminates IPv6-related information among government agencies and interested private sector firms. Such information could include data concerning the potential benefits and costs of deploying IPv6, the purchasing decisions made by other public and private actors, and guidelines to aid

benefits provided by a public good. Nonexcludability creates the problem of ''free riders,'' who can enjoy the benefits of a public good without paying the costs of providing it. Moreover, the producer's inability to exact payment from free riders may prevent the producer from fully recovering costs. For these reasons, market forces alone tend to ''under produce'' public goods. *See* Parkin, note 12 *supra*, at 499–503.

[25] *See* Joseph Stiglitz, *Economics of the Public Sector* (1988).

interested parties in making IPv6 procurement decisions. What would be the costs and benefits of such an approach? What would be the essential elements of an effective clearinghouse program?

b. Government as Consumer

We seek comment on whether the government should use its position as a large consumer of information technology products to help spur IPv6 deployment. For example, working through its procurement process, should the federal government purchase only IPv6-compatible products and services? Should state and local governments adopt similar procurement policies? What would be the cost to the government of adopting IPv6 procurement policies compared to not adopting such policies? Could the government's adoption of IPv6 procurement policies have any unintended, adverse effects on the market for IPv6 products and services? If so, please define and assess the likelihood and magnitude of such effects.

To the extent commenters support government IPv6 procurement policies, we seek specific comment on how they should be implemented. For example, when should such policies become effective? Should such policies apply to all government entities, or are there specific classes of agencies that should adopt these policies before others? How should government fund any additional costs (if any) associated with the adoption of IPv6 procurement policies?

c. Government Support for Research and Development

As discussed above, testbeds and experiments by the Fednets and Abilene [26] have provided early working experience relating to the deployment and use of IPv6. Those activities have also helped to train a corps of IPv6 technicians that could be available to facilitate private sector deployment of IPv6. Furthermore, the Internet2 program has established an IPv6 Working Group that interacts with users, university networks, and Fednets to explain IPv6 deployment and transition issues and to provide hands-on experience to those entities concerning implementation, maintenance, and use of IPv6. In light of these activities, we seek comment on whether the government should provide additional support for IPv6 research and development. Are current research and development efforts sufficient? Does the government possess research and development tools or resources for IPv6 that are not readily available to the private sector? If the government does provide research and development assistance, what form should it take (*e.g.*, use of government facilities, tax incentives, matching grants, direct funding)?

d. Government Funding of IPv6 Deployment

Aside from research and development projects, we also seek comment on whether the federal government should attempt to spur the growth of IPv6 networks, applications, and services through direct funding of IPv6-related activities. For example, the government could provide direct assistance to entities desiring to purchase IPv6-capable equipment, whether in the form of tax incentives, matching grants, or direct funding. The task force seeks comments on the need, feasibility and wisdom of these approaches. How should such programs be structured and how much would they cost? Could existing policies and programs be used to provide such funding, or would new legislative authorization be required? Where the federal government provides funding to state and local governments for emergency communications equipment and networks, should the federal government require state and local agencies to purchase IPv6-capable equipment to ensure interoperability among equipment and networks in neighboring communities?

e. Government IPv6 Mandates

Although imposing government mandates on the private sector to deploy IPv6 is perhaps the least preferred role for government, the task force nonetheless seeks comment on this option to ensure that we develop a complete record. Specifically, we seek comment on whether the government should require suppliers of IP products and services to provide those products and services in an IPv6-compatible version by a date certain. To the extent commenters support such an approach, we ask them to explain the specific authority under which such a mandate could be imposed (legislative or administrative), the timeline under which the mandate would operate, and the benefits and costs of imposing such a mandate.

[26] *See* Section IV.B.2 *supra.*

Dated: January 14, 2004.

Arden L. Bement, Jr.,

Director, National Institute of Standards and Technology.

Michael D. Gallagher,

Acting Assistant Secretary for Communications and Information, National Telecommunications and Information Administration.

[FR Doc. 04–1154 Filed 1–20–04; 8:45 am]

BILLING CODE 3510–60–P

DEPARTMENT OF COMMERCE

National Oceanic and Atmospheric Administration

[I.D. 010604A]

Taking Marine Mammals Incidental to Specified Activities; Port of Miami Construction Project (Phase II)

AGENCY: National Marine Fisheries Service (NMFS), National Oceanic and Atmospheric Administration (NOAA), Commerce.

ACTION: Notice of receipt of application and proposed authorization for an incidental take authorization; request for comments.

SUMMARY: NMFS has received a request from the U.S. Army Corps of Engineers-Jacksonville District (Corps) for renewal of a one-year Incidental Harassment Authorization (IHA) to take marine mammals, by harassment, incidental to deepening the Dodge-Lummus Island Turning Basin in Miami, FL (Turning Basin) and an application for the promulgation of regulations governing the incidental take of marine mammals for the same activity over a 5–year period. Under the Marine Mammal Protection Act (MMPA), NMFS is requesting comments on its proposal to reissue a 1–year IHA to the Corps to incidentally take, by harassment, bottlenose dolphins (*Tursiops truncatus*) as a result of conducting this activity and the Corps' application for regulations.

DATES: Comments and information must be received no later than February 20, 2004.

ADDRESSES: Comments on the application should be addressed to Michael Payne, Chief, Marine Mammal Conservation Division, Office of Protected Resources, NMFS, 1315 East-West Highway, Silver Spring, MD 20910–3225. Comments cannot be accepted if submitted via e-mail or the Internet. A copy of the application may be obtained by writing to this address or by telephoning the contact listed here. Publications referenced in this

document are available for viewing, by appointment during regular business hours, at this address.

FOR FURTHER INFORMATION CONTACT: Kenneth R. Hollingshead, NMFS, (301) 713–2322, ext 128.

SUPPLEMENTARY INFORMATION:

Background

Sections 101(a)(5)(A) and (D) of the MMPA (16 U.S.C. 1361 *et seq.*) direct the Secretary of Commerce to allow, upon request, the incidental, but not intentional, taking of marine mammals by U.S. citizens who engage in a specified activity (other than commercial fishing) within a specified geographical region if certain findings are made and either regulations are issued or, if the taking is limited to harassment, a notice of a proposed authorization is provided to the public for review.

Permission may be granted if NMFS finds that the taking will have a negligible impact on the species or stock(s) and will not have an unmitigable adverse impact on the availability of the species or stock(s) for subsistence uses and that the permissible methods of taking and requirements pertaining to the monitoring and reporting of such takings are set forth. NMFS has defined ''negligible impact'' in 50 CFR 216.103 as ''an impact resulting from the specified activity that cannot be reasonably expected to, and is not reasonably likely to, adversely affect the species or stock through effects on annual rates of recruitment or survival.''

Subsection 101(a)(5)(D) of the MMPA established an expedited process by which citizens of the United States can apply for an authorization to incidentally take small numbers of marine mammals by harassment. The MMPA defines ''harassment'' as:

> any act of pursuit, torment, or annoyance which (i) has the potential to injure a marine mammal or marine mammal stock in the wild [Level A harassment]; or (ii) has the potential to disturb a marine mammal or marine mammal stock in the wild by causing disruption of behavioral patterns, including, but not limited to, migration, breathing, nursing, breeding, feeding, or sheltering [Level B harassment].

Subsection 101(a)(5)(D) establishes a 45–day time limit for NMFS review of an application followed by a 30–day public notice and comment period on any proposed authorizations for the incidental harassment of small numbers of marine mammals. Within 45 days of the close of the comment period, NMFS must either issue or deny issuance of the authorization.

Summary of IHA Request

On December 1, 2003, NMFS received a request from the Corps for a renewal of an IHA to take bottlenose dolphins incidental to using blasting while deepening the Turning Basin in the Port of Miami, south of Dodge-Lummus Island. An IHA for this activity was issued to the Corps previously on May 22, 2003 (68 FR 32016, May 29, 2003). This IHA will expire on May 21, 2004. Since the work in the Turning Basin has not been started at this time, a new IHA is warranted.

The Port of Miami is one of the major terminal complexes in Florida. The majority of this tonnage is high-value general cargo transported in trailers and containers. The Port also accommodates a large cruise ship industry. Development has primarily centered on the Lummus Island terminal and container complex facilities. Expanding and deepening the Turning Basin would eliminate the need for vessels docked at Lummus Island to back to or from the Fisher Island Turning Basin.

Completion of the dredging project may employ a hopper dredge, clamshell dredge, cutterhead dredge and/or confined blasting. The dredging will remove 1.4 million cubic yards of material from an area 1,500 ft (457.2 m) in diameter. The Corps proposes to contract for dredging the Turning Basin, to a maximum depth of 42 ft (12.8 m) plus a 2 ft (0.61 m) overdepth. Material removed from the dredging will be placed in the Miami Ocean Dredged Material Disposal Site.

The Corps expects the contractor will employ underwater dredging and confined blasting to construct the project. Blasting has the potential to have adverse impacts on bottlenose dolphins and manatees (*Trichechus manatus latirostris*)inhabiting the area near the project. While the Corps does not presently have a blasting plan from the contractor, which will specifically identify the number of holes that will be drilled, the amount of explosives that will be used for each hole, the number of blasts per day (usually no more than 3/day), or the number of days the construction is anticipated to take to complete, the Corps has forwarded to NMFS a description of a completed project in San Juan Harbor, Puerto Rico to use as an example. For that project, the maximum weight of the explosives used for each event was 375 lbs (170 kg) and the contractors detonated explosives once or twice daily from July 16 to September 9, for a total of 38 individual detonations. Normal practice is for each charge to be placed approximately 5 – 10 ft (1.5 – 3 m) deep within the rock substrate, depending on how much rock needs to be broken and how deep a depth is sought. The charges are placed in the holes and tamped with rock. Therefore, if the total explosive weight needed is 375 lbs (170 kg) and they have 10 holes, they would average 37.5 lbs (17.0 kgs)/hole. However, a more likely weight for this project may be only 90 lbs (41 kgs) and, therefore, 9 lbs(4.1 kg)/hole. Charge weight and other determinations are expected to be made by the Corps and the contractor approximately 30–60 days prior to commencement of the construction project. Because the charge weight and other information is not presently available, NMFS will require the Corps to provide this information to NMFS, including calculations for impact/mitigation zones (for the protection of marine mammals and sea turtles from injury), prior to commencing work.

Summary of Request for Regulations

While the Corps was coordinating with NMFS on the application and issuance of an IHA for the Miami Turning Basin in early 2003, the Corps identified at least 6 additional Federal navigation projects that might need similar MMPA authorizations within the next few years, if confined blasting is used as a construction technique. To ensure consistency between MMPA authorizations for these dredging projects, and efficiency for both agencies, NMFS recommended that the Corps apply for these authorizations under section 101(a)(5)(A) of the MMPA, instead of individually under section 101(a)(5)(D) of the MMPA. This request was received on December 1, 2003. At this time however, only the Miami Turning Basin is proposed to be covered by the rulemaking. This rule, if implemented, and Letters of Authorization (LOA) issued under that rule, would replace the IHA process for this activity within the Jacksonville District. Each application for an LOA for another project within the Jacksonville District by the Corps for confined blasting within the District would require separate informal public review and comment, prior to issuance of an LOA. NMFS expects to start this rulemaking in early April, 2004.

Description of the Marine Mammals Affected by the Activity

General information on marine mammal species found off the East Coast of the United States can be found in Waring et al. (2001, 2002). These reports are available at the following location: *http://www.nmfs.noaa.gov/prot_res/PR2/Stock_Assessment_Program/sars.html.*

The only marine mammal species likely to be found in the Turning Basin are the bottlenose dolphin and West Indian manatee. Take authorizations for manatees are issued by the U.S. Fish and Wildlife Service (USFWS). There is no stock assessment available concerning the status of bottlenose dolphins in the inshore and nearshore waters off south Florida. Additionally, while neither a status review nor peer-reviewed reports on the status of the Biscayne Bay bottlenose dolphins have been published, the Southeast Fisheries Science Center, NMFS, is currently working on this report. Preliminary information indicates a documented population of 159 bottlenose dolphins residing within the boundaries of the Biscayne Bay area. A total of 146 bottlenose dolphins have been resighted in the Port of Miami area at least one additional time. These animals were often sighted within or transiting through the Port of Miami. It is not known whether bottlenose dolphins inhabit the Turning Basin or whether they simply use the area as a transit to North Biscayne Bay or offshore via the main port channel. The defined stocks of bottlenose dolphins that reside closest to the project area, therefore, are the western North Atlantic coastal (central Florida management unit) and offshore stocks of bottlenose dolphins with a minimum population estimated to be 24,897 for the offshore stock. Abundance of the coastal stock in central Florida is 10,652 in winter, but unknown is summer. Additional assessment information for these two stocks is available at the previously mentioned URL.

Potential Effects on Habitat

The Corps expects the effects on marine mammal habitat to be minimal. The bottom of the basin is rock and sand, and the walls of the Turning Basin are vertical rock. The Corps also believes that the area of the Turning Basin may not be suitable habitat for dolphins in Biscayne Bay. It is more likely that the animals use the area to traverse to North Biscayne Bay or offshore via the main port channel. In addition, as a large number of fish are not expected to perish during the detonations, there will not be a significant effect on dolphins' food supply (T. Jordan, pers. comm, 2002).

Potential Effects on Marine Mammals

According to the Corps, bottlenose dolphins and other marine mammals have not been documented as being directly affected by dredging activities and, therefore, the Corps does not anticipate any incidental harassment of bottlenose dolphins by dredging.

Potential impacts to marine mammals from explosive detonations could include both lethal and non-lethal injury, as well as Level B harassment. Marine mammals may be killed or injured as a result of an explosive detonation due to the response of air cavities in the body, such as the lungs and bubbles in the intestines. Effects are likely to be most severe in near surface waters where the reflected shock wave creates a region of negative pressure called ''cavitation.''

A second possible cause of mortality is the onset of extensive lung hemorrhage. Extensive lung hemorrhage is considered debilitating and potentially fatal. Suffocation caused by lung hemorrhage is likely to be the major cause of marine mammal death from underwater shock waves. The estimated range for the onset of extensive lung hemorrhage to marine mammals varies depending upon the animal's weight, with the smallest mammals having the greatest potential hazard range.

NMFS' criteria for determining non-lethal injury (Level A harassment) from explosives are the peak pressure that will result in: (1) the onset of slight lung hemorrhage, or (2) a 50–percent probability level for a rupture of the tympanic membrane. These are injuries from which animals would be expected to recover on their own. NMFS has also established dual criteria for what constitutes Level B acoustic harassment: (1) An energy-based temporary threshold shift (TTS) from received sound levels 182 dB re 1 microPa^2–sec cumulative energy flux in any 1/3 octave band above 100 Hz for odontocetes (derived from experiments with bottlenose dolphins(Ridgway *et al.*, 1997; Schlundt *et al.*, 2000); and (2) 12 psi peak pressure cited by Ketten (1995) as associated with a safe outer limit for minimal, recoverable auditory trauma (i.e., TTS). The Level B Harassment zone, therefore, is the distance from the mortality/serious injury zone to the radius where neither of these criterion is exceeded.

Mitigation and Monitoring

In the absence of acoustic measurements (due to the high cost and complex instrumentation needed), in order to protect endangered, threatened and protected species (manatees, dolphins, sea turtles), the following equations have been proposed by the Corps for blasting projects to determine zones for injury or mortality from an open water explosion and to assist the Corps in establishing mitigation to reduce impacts to the lowest level practicable. These equations are believed to be conservative because they are based on humans, which are more sensitive than dolphins (humans) and on unconfined charges while the proposed blasts in the Turning Basin will be confined (stemmed) charges. The equations, based on the Navy Diver Formula, are:

Caution Zone radius = 260 (lbs/delay)$^{1/3}$

Safety Zone radius = 520 (lbs/delay)$^{1/3}$

The Caution Zone represents the radius from the detonation beyond which mortality is not expected from an open-water blast. The Safety Zone is the approximate distance beyond which non-serious injury (Level A harassment) is unlikely from an open-water explosion. These zones will be used for implementing mitigation measures.

In the Turning Basin or any area where explosives are required to obtain channel design depth, marine mammal/sea turtle protection measures will be employed by the Corps. For each explosive charge, the Corps proposes that detonation will not occur if a marine mammal is sighted by a dedicated marine mammal/sea turtle observer within the safety zone, a circular area around the detonation site with the following radius: R = 520(W)1/3 (520 times the cube root of the weight of the explosive charge in pounds) where: R = radius of the safety zone in ft; W = weight of the explosive charge in lbs).

Although the Caution Zone is considered to be an area for potential mortality, the Corps believes that because all explosive charges will be stemmed (placed in a drilled hole and tamped with rock), the areas for potential mortality and injury will be significantly smaller than this area and, therefore, it is unlikely that even non-serious injury would occur if, as is believed to be the case, monitoring this zone is effective. For example, since bottlenose dolphins are commonly found on the surface of the water, implementation of a mitigation/monitoring program is expected by NMFS to be close to 100 percent effective.

The Corps proposes to implement mitigation measures and a monitoring program that will establish both caution- and safety-zone radii to ensure that bottlenose dolphins will not be injured during blasting and that impacts will be at the lowest level practicable. Additional mitigation measures include: (1) confining the explosives in a hole with drill patterns restricted to a minimum of 8 ft (2.44 m) separation from any other loaded hole; (2)

restricting the hours of detonation from 2 hours after sunrise to 1 hr before sunset to ensure adequate observation of marine mammals and sea turtles in the safety zone; (3) staggering the detonation for each explosive hole in order to spread the explosive's total overpressure over time, which in turn will reduce the radius of the caution zone; (4) capping the hole containing explosives with rock in order to reduce the outward potential of the blast, thereby reducing the chance of injuring a dolphin, manatee, or sea turtle; (5) matching, to the extent possible, the energy needed in the ''work effort'' of the borehole to the rock mass to minimize excess energy vented into the water column; and (6) conducting a marine mammal/sea turtle watch with no less than two qualified observers from a small water craft and/or an elevated platform on the explosives barge, at least 30 minutes before and continue for 30 minutes after each detonation to ensure that there are no dolphins or sea turtles in the area at the time of detonation.

The observer monitoring program will take place in a circular area at least three times the radius of the above described Caution Zone (called the watch zone). Any marine mammal(s) in the caution, safety, or watch zones will not be forced to move out of those zones by human intervention. Detonation shall not occur until the animal(s) move(s) out of the safety zone on its own volition.

Reporting

NMFS proposes to require the Corps to submit a report of activities 120 days before the expiration of the proposed IHA if the proposed work has started. This report will include the status of the work being undertaken, marine mammals sighted during the monitoring period, any behavioral observations made on bottlenose dolphins and any delays in detonation due to marine mammals or sea turtles being within the safety zone.

In the unlikely event a marine mammal or marine turtle is injured or killed during blasting, the Contractor shall immediately notify the NMFS Regional Office.

Endangered Species Act

Under section 7 of the ESA, the Corps completed consultation with NOAA Fisheries on September 23, 2002 and with the USFWS on June 19, 2002 for this project. Both agencies concurred with the Corps that activities associated with the Corps' dredging project in the Dodge-Lummus Island Turning Basin were not likely to adversely affect listed species.

National Environmental Policy Act

The Corps prepared an Final Environmental Impact Statement (FEIS) in 1989 for the Navigation Study for the Miami Harbor Channel. A copy of this document is available upon request (see **ADDRESSES**). NMFS is reviewing this FEIS in relation to the Corps' application and will determine the appropriate action to take under NEPA prior to making a determination on the issuance of an IHA.

Preliminary Conclusions

NMFS has preliminarily determined that the Corps' proposed action, including mitigation measures to protect marine mammals, should result, at worst, in the temporary modification in behavior by bottlenose dolphins, including temporarily vacating the area to avoid the blasting activity and the potential for ¶minor visual and acoustic disturbance from dredging and detonations. This action is expected to have a negligible impact on the affected species or stocks of marine mammals. In addition, no take by injury and/or death is anticipated, and harassment takes will be at the lowest level practicable due to incorporation of the mitigation measures described in this document.

Proposed Authorization

NMFS proposes to reissue an IHA to the Corps for the potential harassment of small numbers of bottlenose dolphins incidental to deepening the Dodge-Lummus Island Turning Basin in Miami, FL (Turning Basin), provided the previously mentioned mitigation, monitoring, and reporting requirements are incorporated. NMFS has preliminarily determined that the proposed activity would result in the harassment of only small numbers of bottlenose dolphins and will have no more than a negligible impact on this marine mammal stock.

Information Solicited

NMFS requests interested persons to submit comments and information concerning this proposed IHA and the application for regulations request (see **ADDRESSES**).

Dated: January 14, 2004.

Donna Wieting,

Deputy Director, Office of Protected Resources, National Marine Fisheries Service.

[FR Doc. 04–1216 Filed 1–20–04; 8:45 am]

BILLING CODE 3510–22–S

DEPARTMENT OF COMMERCE

National Oceanic and Atmospheric Administration

[I.D. 010804A]

Marine Mammals; Permit No. 821–1588–03 and File No. 909–1726–00

AGENCY: National Marine Fisheries Service (NMFS), National Oceanic and Atmospheric Administration (NOAA), Commerce.

ACTION: Receipt of application for amendment and application for permit.

SUMMARY: Notice is hereby given that Texas A&M University, Department of Marine Biology, P.O. Box 1675, Galveston, Texas 77551 (Principal Investigator: Dr. Randall W. Davis) has requested an amendment to scientific research Permit No. 821–1588–01, and Daniel T. Engelhaupt, P.O. Box 197, Picton, New Zealand has applied in due form for a permit to take marine mammals for scientific research.

DATES: Written or telefaxed comments must be received on or before February 20, 2004.

ADDRESSES: The amendment request and related documents are available for review upon written request or by appointment in the following office(s):

Permits, Conservation and Education Division, Office of Protected Resources, NMFS, 1315 East-West Highway, Room 13705, Silver Spring, MD 20910; phone (301)713–2289; fax (301)713–0376; and

Permit No. 881–1588–03 (Davis) and File No. 909–1726–00 (Engelhaupt): Assistant Regional Administrator for Protected Resources, Southeast Region, NMFS, 9721 Executive Center Drive North, St. Petersburg, FL 33702–2432; phone (813)570–5301; fax (813)570–5517; and

File No. 909–1726–00 (Engelhaupt): Assistant Regional Administrator for Protected Resources, Northeast Region, NMFS, One Blackburn Drive, Gloucester, MA 01930–2298; phone (508)281–9346; fax (508)281–9371.

Written comments or requests for a public hearing on these requests should be submitted to the Chief, Permits, Conservation and Education Division, F/PR1, Office of Protected Resources, NMFS, 1315 East-West Highway, Room 13705, Silver Spring, MD 20910. Those individuals requesting a hearing should set forth the specific reasons why a hearing on the particular request would be appropriate.

Comments may also be submitted by facsimile at (301)713–0376, provided the facsimile is confirmed by hard copy submitted by mail and postmarked no

later than the closing date of the comment period.

FOR FURTHER INFORMATION CONTACT: Ruth Johnson (*Ruth.Johnson@noaa.gov*) or Carrie Hubard (*Carrie.w.Hubard@noaa.gov*) or Phone: (301)713–2289.

SUPPLEMENTARY INFORMATION: The amendment and application are requested under the authority of the Marine Mammal Protection Act of 1972, as amended (16 U.S.C. 1361 *et seq.*), the Regulations Governing the Taking and Importing of Marine Mammals (50 CFR part 216), the Endangered Species Act of 1973, as amended (16 U.S.C. 1531 *et seq.*), and the regulations governing the taking, importing, and exporting of endangered and threatened species (50 CFR 222–226).

Permit No. 821–1588–02 (R. Davis) authorizes the permit holder to conduct research under four projects: 1) capture, tag, sample, release Weddell seals (*Leptonychotes weddelli*) on McMurdo Sound, Antarctica; (2) approach, tag, biopsy, photograph sperm whales (*Physeter macrocephalus*) in the Gulf of Mexico, and conduct research activities on Odontocetes that may result in Level B harassment; (3) import/export marine mammal specimens obtained from dead animals; and (4) Project IV - Hunting Behavior and Energetics of Free-Ranging Elephant Seals. The permit holder now requests authorization to amend Project II to increase the number of sperm whales to be taken by harassment during photo-identification and behavioral observations to 530 animals. Currently 100 sperm whales may be incidentally harassed during tagging and biopsy sampling of 60 animals.

Danied Engelhauft (File No. 909–1726) requests a permit to biopsy sample and collect naturally sloughed skin from sperm whales (*Physeter macrocephalus*) and a variety of other non-listed cetacean species in the Gulf of Mexico, North Atlantic Ocean, Caribbean Sea, and Mediterranean Sea. The goal is the continuation of a previous four-year study that analyzes population genetic structure between the Gulf of Mexico, Caribbean Sea, North Atlantic Ocean, and Mediterranean Sea and provides a comparison of these putative geographic populations with those of other geographic areas. The project is part of a multi-year and multi-institution, cross-disciplinary research program to understand the impacts of oil/gas industries and seismic exploration on the endangered sperm whale population in the Gulf of Mexico. Samples would be collected by obtaining skin samples via biopsy dart, sloughed skin sampling, as well using extant samples of stored material obtained from NMFS Southeast and Northeast regional stranding networks. Samples will be exported to the research facilities at the University of Durham's Biological Sciences Laboratory, New Zealand, or to a similar research facility in the United States for genetic sample processing.

Concurrent with the publication of this notice in the **Federal Register**, NMFS is forwarding copies of this application to the Marine Mammal Commission and its Committee of Scientific Advisors.

Dated: January 13, 2004.

Stephen L. Leathery,

Chief, Permits, Conservation and Education Division, Office of Protected Resources, National Marine Fisheries Service.

[FR Doc. 04–1215 Filed 1–20–04; 8:45 am]

BILLING CODE 3510–22–S

DEPARTMENT OF COMMERCE

National Oceanic and Atmospheric Administration

Notice of Availability of Progress Report: The Coral Reef Conservation Grants Program

AGENCY: Department of Commerce.

ACTION: Notice of availability.

SUMMARY: The National Oceanic and Atmospheric Administration (NOAA) announces the availability of *Progress Report: The Coral Reef Conservation Grant Program* (Report). The Report was published in response to the Coral Reef Conservation Act of 2000 (Act, 16 U.S.C. 6401 *et seq.,* Pub. L. 106–562), which directs NOAA's Administrator to provide a report that documents the effectiveness of its grants program (Program) no later than three years after enactment of the Act.

The Report provides an overview of the Program since its establishment in 2002. It also highlights the achievements of the Program in each of six substantive topic areas, as well as provides specific information on each of the 83 grants awarded in fiscal years 2002 and 2003.

FOR FURTHER INFORMATION CONTACT: To request a copy of the Report please contact the NOAA Coral Reef Conservation Program by e-mail at *coralreef@noaa.gov,* by fax at (301) 713–4389, or by mail at 1305 East West Highway, NOS/ORR 10201, Silver Spring, MD 20910. The Report is also available electronically on the NOAA Coral Reef Information System Web site (*http://www.coris.noaa.gov*).

SUPPLEMENTARY INFORMATION: The Coral Reef Conservation Act of 2000 (Act, 16 U.S.C. 6401 *et seq.,* Pub. L. 106–562) authorizes the DOC, through the NOAA Administrator and subject to the availability of funds, to make matching grants of Federal financial assistance to support projects for the conservation of coral reefs. The Act also directs NOAA's Administrator to provide a report that documents the effectiveness of its grant program (Program) no later than three years after enactment of the Act. *Progress Report: The Coral Reef Conservation Grant Program* is NOAA's response to this requirement.

This report provides an overview of the Program since its establishment in 2002, including a description of the process and results of the Program's development. It also highlights the achievements of the Program in each of the six topic areas, and provides specific information on each of the 83 grants awarded in fiscal years 2002 and 2003. This includes a State-by-State listing of Federal and non-Federal matching funds, and a detailed description of each activity, its outcomes, and measurements of performance. The report also contains summary tables that organize grant information by geographic and substantive topic area. Finally, the report contains an initial assessment of the effectiveness of the Program.

Dated: January 14, 2004.

Richard W. Spinrad,

Assistant Administrator, Ocean Services and Coastal Zone Management, National Oceanic and Atmospheric Administration.

[FR Doc. 04–1166 Filed 1–20–04; 8:45 am]

BILLING CODE 3510–JE–P

CORPORATION FOR NATIONAL AND COMMUNITY SERVICE

Proposed Information Collection; Comment Request

AGENCY: Corporation for National and Community Service.

ACTION: Notice.

SUMMARY: The Corporation for National and Community Service (hereinafter the ''Corporation''), as part of its continuing effort to reduce paperwork and respondent burden, conducts a preclearance consultation program to provide the general public and Federal agencies with an opportunity to comment on proposed and/or continuing collections of information in accordance with the Paperwork Reduction Act of 1995 (PRA95) (44 U.S.C. 3506(c)(2)(A)). This program helps to ensure that requested data can

be provided in the desired format, reporting burden (time and financial resources) is minimized, collection instruments are clearly understood, and the impact of collection requirement on respondents can be properly assessed.

The Corporation proposes to conduct a series of outcome measurement surveys among a sample of AmeriCorps members, AmeriCorps sub-grantee organizations that deliver services, and end-beneficiaries of the services provided by projects in which AmeriCorps sub-grantee organizations and members are involved. The information will meet the federal government's accountability requirements under the Government Performance Results Act of 1993 and, at the same time, be useful to AmeriCorps program managers.

DATES: Written comments must be submitted to the office listed in the **ADDRESSES** section by March 22, 2004.

ADDRESSES: You may submit comments, identified by the title of the information collection activity, by any of the following methods:

(1) By mail sent to: Corporation for National and Community Service, Attn: Kevin Cramer, Department of Research and Policy Development, Room 8109, 1201 New York Avenue, NW., Washington, DC 20525.

(2) By hand delivery or by courier to the Corporation's mailroom, Room 6010, at the mail address given in paragraph (1) above, between 9 a.m. and 4 p.m. Monday through Friday, except Federal holidays.

(3) By fax to: (202) 565–2785, Attn: Kevin Cramer, Department of Research and Policy Development.

(4) Electronically through the Corporation's e-mail address system: *kcramer@cns.gov.*

FOR FURTHER INFORMATION CONTACT: Kevin Cramer at (202) 606–5000, ext. 232.

SUPPLEMENTARY INFORMATION: The Corporation is particularly interested in comments which:

- Evaluate whether the proposed collection of information is necessary for the proper performance of the functions of the Corporation, including whether the information will have practical utility;
- Evaluate the accuracy of the agency's estimate of the burden of the proposed collection of information, including the validity of the methodology and assumptions used;
- Enhance the quality, utility and clarity of the information to be collected; and
- Minimize the burden of the collection of information to those who are to respond, including through the use of appropriate automated, electronic, mechanical, or other technological collection techniques or other forms of information technology, *e.g.* permitting electronic submissions of responses.

Title of Information Collection Activity: Performance Measurement in AmeriCorps.

Background: The Corporation is strongly committed to making its performance measurement and management systems more results oriented in order to strengthen the accountability and performance of its programs. As part of its effort to do so, there is a need to collect outcome information regarding the Corporation's AmeriCorps programs (consisting of AmeriCorps*State and National, AmeriCorps*VISTA, and AmeriCorps*National Civilian Community Corps (NCCC)). Information on program performance will be informed by a series of surveys, to be conducted electronically and by telephone, of a sample of AmeriCorps members, sub-grantee organizations that deliver services, and end-beneficiaries of the services provided by projects in which AmeriCorps sub-grantee organizations and AmeriCorps members are involved.

Current Action: The Corporation seeks public comment on the survey instruments and forms that will be used to collect and report information on program performance.

Agency: Corporation for National and Community Service.

Title: Performance Measurement in AmeriCorps.

OMB Number: None.

Agency Number: None.

Affected Public: AmeriCorps members, sub-grantee organizations, and service beneficiaries.

Total Respondents: 4,250.

Frequency: Annually.

Average Time Per Response: 10 minutes.

Estimated Total Burden Hours: 708 hours.

Total Burden Cost (capital/startup): None.

Total Burden Cost (operating/maintenance): None.

Comments submitted in response to this notice will be summarized and/or included in the request for Office of Management and Budget approval of the information collection request; they will also become a matter of public record.

Dated: January 14, 2004.

David A. Reingold,

Director, Department of Research and Policy Development.

[FR Doc. 04–1211 Filed 1–20–04; 8:45 am]

BILLING CODE 6050–$$–P

DEPARTMENT OF DEFENSE

Department of the Navy

Notice of Availability of Government-Owned Inventions; Available for Licensing

AGENCY: Department of the Navy, DOD.

ACTION: Notice.

SUMMARY: The inventions listed below are assigned to the U.S. Government as represented by the Secretary of the Navy and are available for licensing by the Department of the Navy.

U.S. Patent No. 6,033,708: Method for Producing Sterile Filterable Liposome Dispersion, Navy Case No. 77,808//U.S. Patent No. 6,358,678: Applications of Reversible Crosslinking and Co-Treatment in Stabilization and Viral Inactivations of Erythrocytes, Navy Case No. 78,253//U.S. Patent No. 6,447,848: Nanosize Particle Coatings Made by Thermally Spraying Solution Precursor Feedstocks, Navy Case No. 78,896.

ADDRESSES: Requests for copies of the inventions cited should be directed to the Naval Research Laboratory, Code 1004, 4555 Overlook Avenue, SW., Washington, DC 20375–5320, and must include the Navy Case number.

FOR FURTHER INFORMATION CONTACT: Jane F. Kuhl, Technology Transfer Office, NRL Code 1004, 4555 Overlook Avenue, SW., Washington, DC 20375–5320, telephone (202) 767–7230. Due to temporary U.S. Postal Service delays, please fax (202) 404–7920, E-Mail: *kuhl@utopia.nrl.navy.mil* or use courier delivery to expedite response.

(Authority: 35 U.S.C. 207, 37 CFR part 404).

Dated: January 13, 2004.

J. T. Baltimore,

Lieutenant Commander, Judge Advocate General's Corps, U.S. Navy, Alternate Federal Register Liaison Officer.

[FR Doc. 04–1222 Filed 1–20–04; 8:45 am]

BILLING CODE 3810–FF–P

DEPARTMENT OF EDUCATION

Submission for OMB Review; Comment Request

AGENCY: Department of Education.

SUMMARY: The Leader, Regulatory Information Management Group, Office

of the Chief Information Officer invites comments on the submission for OMB review as required by the Paperwork Reduction Act of 1995.

DATES: Interested persons are invited to submit comments on or before February 20, 2004.

ADDRESSES: Written comments should be addressed to the Office of Information and Regulatory Affairs, Attention: Melanie Kadlic, Desk Officer, Department of Education, Office of Management and Budget, 725 17th Street, NW., Room 10235, New Executive Office Building, Washington, DC 20503 or should be electronically mailed to the Internet address *Melanie_Kadlic@omb.eop.gov.*

SUPPLEMENTARY INFORMATION: Section 3506 of the Paperwork Reduction Act of 1995 (44 U.S.C. chapter 35) requires that the Office of Management and Budget (OMB) provide interested Federal agencies and the public an early opportunity to comment on information collection requests. OMB may amend or waive the requirement for public consultation to the extent that public participation in the approval process would defeat the purpose of the information collection, violate State or Federal law, or substantially interfere with any agency's ability to perform its statutory obligations. The Leader, Regulatory Information Management Group, Office of the Chief Information Officer, publishes that notice containing proposed information collection requests prior to submission of these requests to OMB. Each proposed information collection, grouped by office, contains the following: (1) Type of review requested, *e.g.* new, revision, extension, existing or reinstatement; (2) title; (3) summary of the collection; (4) description of the need for, and proposed use of, the information; (5) respondents and frequency of collection; and (6) reporting and/or recordkeeping burden. OMB invites public comment.

Dated: January 14, 2004.

Angela C. Arrington,

Leader, Regulatory Information Management Group, Office of the Chief Information Officer.

Office of the Undersecretary

Type of Review: New.

Title: National Longitudinal Study of No Child Left Behind (NCLB).

Frequency: Two years—2004 and 2006.

Affected Public: State, local, or tribal gov't, SEAs or LEAs.

Reporting and Recordkeeping Hour Burden:

Responses: 1,800.

Burden Hours: 5,400.

Abstract: This study will examine the implementation of the No Child Left Behind Act provisions for the Title I and Title II programs in a nationally-representative sample of schools and districts. The study will include four components focused on particular provisions of the law: (1) Accountability; (2) teacher quality; (3) expanding options for parents and students; and (4) targeting and resource allocation. The study will collect data in the 2004–05 and 2006–07 school years.

Requests for copies of the submission for OMB review; comment request may be accessed from *http://edicsweb.ed.gov,* by selecting the ''Browse Pending Collections'' link and by clicking on link number 2410. When you access the information collection, click on ''Download Attachments'' to view. Written requests for information should be addressed to Vivian Reese, Department of Education, 400 Maryland Avenue, SW., Room 4050, Regional Office Building 3, Washington, DC 20202–4651 or to the e-mail address *vivan.reese@ed.gov.* Requests may also be electronically mailed to the Internet address *OCIO_RIMG@ed.gov* or faxed to 202–708–9346. Please specify the complete title of the information collection when making your request.

Comments regarding burden and/or the collection activity requirements should be directed to Katrina Ingalls at her e-mail address *Katrina.Ingalls@ed.gov.* Individuals who use a telecommunications device for the deaf (TDD) may call the Federal Information Relay Service (FIRS) at 1–800–877–8339.

[FR Doc. 04–1180 Filed 1–20–04; 8:45 am]

BILLING CODE 4000–01–P

DEPARTMENT OF EDUCATION

Office of Postsecondary Education; Correction

ACTION: Correction; Fund for the Improvement of Postsecondary Education—Special Focus Competition: European Community-United States of America Cooperation Program in Higher Education and Vocational Education and Training.

SUMMARY: We correct the dates listed in the sections entitled **DATES** and *IV. Application and Submission Information, 3. Submission Dates and Times,* as published in the **Federal Register** on December 30, 2003 (68 FR 75221).

SUPPLEMENTARY INFORMATION: On December 30, 2003, we published a notice in the **Federal Register** inviting applications for the Fund for the Improvement of Postsecondary Education—Special Focus Competition: European Community-United States of America Cooperation Program in Higher Education and Vocational Education and Training Program. The dates listed in the sections entitled **DATES** and *IV. Application and Submission Information, 3. Submission Dates and Times* are corrected to read as follows.

Applications Available: January 23, 2004.

Deadline for Transmittal of Applications: April 23, 2004.

Deadline for Intergovernmental Review: June 16, 2004.

FOR FURTHER INFORMATION CONTACT: Beverly Baker, Fund for the Improvement of Postsecondary Education, U.S. Department of Education, 1990 K Street, NW., suite 6140, Washington, DC 20006–8544. Telephone: (202) 502–7503 or by e-mail: *Beverly.Baker@ed.gov.*

If you use a telecommunications device for the deaf (TDD), you may call the Federal Information Relay Service (FIRS) at 1–800–877–8339.

Individuals with disabilities may obtain this document in an alternative format, (*e.g.* Braille, large print, audiotape, or computer diskette) on request to the contact person listed under **FOR FURTHER INFORMATION CONTACT**.

Electronic Access to This Document

You may view this document, as well as all other documents of this Department published in the **Federal Register**, in text or Adobe Portable Document Format (PDF) on the Internet at the following site: *http://www.ed.gov/news/fedregister.*

To use PDF you must have Adobe Acrobat Reader, which is available free at this site. If you have questions about using PDF, call the U.S. Government Printing Office (GPO), toll free, at 1–888–293–6498; or in the Washington, DC area at (202) 512–1530.

Note: The official version of this document is the document published in the **Federal Register**. Free Internet access to the official edition of the **Federal Register** and the Code of Federal Regulations is available on GPO Access at: *http://www.gpoaccess.gov/nara/index.html.*

Program Authority: 20 U.S.C. 1138–1138d.

Dated: January 16, 2004.

Sally L. Stroup,

Assistant Secretary, Office of Postsecondary Education.

[FR Doc. 04–1302 Filed 1–16–04; 10:59 am]

BILLING CODE 4000–01–P

DEPARTMENT OF ENERGY

Office of Science Financial Assistance Program Notice DE–FG01–04ER04–09: Scientific Discovery Through Advanced Computing—Advanced Simulation of Fusion Plasmas

AGENCY: U.S. Department of Energy (DOE).

ACTION: Notice inviting research grant applications.

SUMMARY: The Office of Fusion Energy Sciences (OFES) of the Office of Science (SC), U.S. Department of Energy (DOE), hereby announces its interest in receiving grant applications for the development of scientific simulation codes needed to address complex problems in fusion energy sciences. The goal is the creation of codes that achieve high performance on a single node, scale to hundreds of nodes and thousands of processors, and have the potential to be ported to future generations of high performance computers. This announcement is focused on topical areas that are important to a burning plasma physics experiment, such as ITER, and will contribute to establishing the scientific foundation for an integrated fusion simulation in the future. Specific areas of interest include:

- Turbulence and transport in order to understand energy and particle confinement in burning plasmas,
- Macroscopic equilibrium and stability to predict stability limits in magnetically confined plasmas,
- Boundary layer effects in plasmas in order to understand the transport of heat and particles in the edge region of a fusion device, and
- Electromagnetic wave/particle interactions to be able to predict heating and current drive in burning plasmas.

The full text of Program Notice DE–FG01–04ER04–09 is available via the Internet at the following Web site address: *http://www.science.doe.gov/production/grants/grants.html.*

DATES: Applicants are requested to submit a Letter-of-Intent by February 16, 2004. This letter should include the name of the applicant, the title of the project, the name of the Principal Investigator(s)/project director, the amount of funds requested, and a one-page abstract. Letters-of-Intent will be used to organize and expedite the merit review process. Failure to submit such letters will not negatively affect a responsive application submitted in a timely fashion. The Letter-of-Intent should be sent by E-mail to *john.sauter@science.doe.gov,* and the subject line should state: Letter-of-Intent regarding Program Notice DE–FG01–04ER04–09.

Formal applications submitted in response to this notice must be received by DOE no later than 4:30 p.m., March 23, 2004. Electronic submission of formal applications in PDF format is required.

ADDRESSES: Letters-of-Intent should be sent by E-mail to *john.sauter@science.doe.gov,* and the subject line should state: Letter-of-Intent regarding Program Notice DE–FG01–04ER04–09.

Full applications in response to this solicitation Number DE–FG01–04ER04–09 must be submitted electronically by an authorized institutional business official through DOE's Industry Interactive Procurement System (IIPS) at: *http://e-center.doe.gov/.* IIPS provides for the posting of solicitations and receipt of applications in a paperless environment via the Internet. In order to submit applications through IIPS, your business official will need to register at the IIPS Web site. It is suggested that this registration be completed several days prior to the date on which you plan to submit the formal application. The Office of Science will include attachments as part of this notice that provide the appropriate forms in PDF fillable format that are to be submitted through IIPS. IIPS offers the option of submitting multiple files—please limit submissions to only one file within the volume if possible, with a maximum of no more than four files. Color images should be submitted in IIPS as a separate file in PDF format and identified as such. These images should be kept to a minimum due to the limitations of reproducing them. They should be numbered and referred to in the body of the technical scientific grant application as Color image 1, Color image 2, etc. Questions regarding the operation of IIPS may be e-mailed to the IIPS Help Desk at: *helpdesk@pr.doe.gov,* or you may call the help desk at: 800–683–0751; residents of Canada call: 202–287–1491. Further information on the use of IIPS by the Office of Science is available at: *http://www.sc.doe.gov/production/grants/grants.html.*

FOR FURTHER INFORMATION CONTACT: Dr. Stephen Eckstrand or Dr. Arnold Kritz, Office of Fusion Energy Sciences, SC–55/Germantown Building, U.S. Department of Energy, 1000 Independence Ave. SW., Washington, DC 20585–1290. Telephone numbers and e-mail addresses are listed below:

Stephen Eckstrand: telephone 301–903–5546, e-mail *steve.eckstrand@science.doe.gov.*

Arnold Kritz: telephone 301–903–2027, e-mail *arnold.kritz@science.doe.gov.*

SUPPLEMENTARY INFORMATION:

Scientific Discovery Through Advanced Computing

Beyond the scientific computing and computational science research embedded in the Office of Science (SC) core research programs, SC invests in a portfolio of coordinated research efforts directed at exploiting the emerging capabilities of terascale and petascale computing under the collective title of Scientific Discovery through Advanced Computing (SciDAC). The research projects in the SciDAC portfolio respond to the extraordinary difficulties of realizing sustained peak performance for scientific applications, such as simulating combustion, making multi-century climate predictions, understanding and controlling a burning plasma, and designing new particle accelerators that require terascale and petascale capabilities to accomplish their research goals. In recognition of these difficulties, the SciDAC research projects are collaborative efforts involving teams of physical scientists, mathematicians, computer scientists, and computational scientists working on major software and algorithm development for problems in the core research programs of the Office of Science. Research funded in the SciDAC portfolio is enabling teams of laboratory and university researchers to solve some of the most challenging scientific problems in the core programs of the Office of Science at a level of accuracy and detail never before achieved. A complete description of the SciDAC program can be found at: *http://www.osti.gov/scidac/.*

Background: Advanced Simulation of Fusion Plasmas

In January 2003, the President announced that the United States would seek to join ITER negotiations, and the United States has subsequently done so. ITER is an ambitious international research project to harness the promise of fusion energy. Following this announcement, the Office of Fusion Energy Sciences decided to focus its part of the SciDAC program on burning plasma physics needs. Accordingly, the new and renewal applications for the fusion SciDAC program will concentrate on developing reliable computational modeling capabilities for dealing with burning plasma physics issues relevant to ITER, and on establishing the scientific groundwork for an integrated fusion simulation project. Such a project is needed to develop the predictive capability necessary to improve

experimental planning for ITER and enhance scientific understanding gained from the operation of ITER.

The scope and complexity of these projects will require close collaboration among researchers from the computational and theoretical plasma physics, computer science, and applied mathematics disciplines. Thus, this solicitation calls for the creation of topical centers as the organizational basis for a successful application. A topical center is a multi-institutional, multi-disciplinary team that will:

- Create scientific simulation codes that take full advantage of terascale computers,
- Work closely with other SciDAC teams to ensure that the best available mathematical algorithms and computer science methods are employed, and
- Manage the work of the center in a way that will foster good communication and decision making (see section on Collaboration and Coordination below).

Partnerships among universities, national laboratories, and industry are encouraged. Collaborations between computational plasma physicists, applied mathematicians and computer scientists are also encouraged. Applicants may request additional funding for associated applied mathematics or computer science work that is needed to support the development of the scientific applications codes as part of Scientific Application Partnership Program.

Applications are being sought in the following four topical areas:

1. Macroscopic Equilibrium and Stability

Applications for development of codes to model macroscale dynamics in fusion-grade tokamak plasmas should address relevant physics issues in 3-dimensional extended magnetohydrodynamics (MHD), such as (1) full nonlinear sawtooth oscillation modeling in fusion-grade plasmas, (2) tearing mode and neoclassical tearing mode excitation and control in high-beta plasmas, (3) nonlinear evolution and control of resistive wall modes, including toroidal flows, (4) effects of fast ions, such as fusion-produced alpha particles, on MHD phenomena in tokamak plasmas, (5) edge MHD-type instabilities and their non-linear evolution, (6) two-fluid and kinetic effects on MHD modes, and (7) the onset and evolution of major disruptions.

2. Turbulence and Transport

Applications for studies of microturbulence and transport of energy, particles and momentum need to address key scientific problems, such as (1) Bohm versus gyro-Bohm scaling and the transition between the two regimes, (2) transport barrier formation and dynamics including the different transport channels, (3) statistics of mesoscale intermittency in transport (*e.g.*, avalanches), (4) the dynamics of transport perturbation events such as heat pulse propagation, and (5) electromagnetic turbulence and electron heat transport due to magnetic perturbations.

3. Boundary Layer/Edge Plasma Modeling

Applications related to edge modeling should address scientific issues such as (1) evolution of the edge transport barrier including the mechanism for L-H mode transition, transport within the edge barrier, the trigger mechanism for ELM crashes, the frequency of ELM crashes, and the plasma energy, density and current lost during each ELM crash, (2) effects associated with the scrape-off layer, diverter and plasma wall interaction including plasma convective transport to the wall, neutral recycling, wall erosion, and inward impurity transport from the wall.

4. Electromagnetic Wave/Plasma Interaction

Applications related to the role of radio frequency waves in burning plasmas need to address topics such as (1) wave-plasma interactions in plasmas with a large energetic alpha particle population and in plasmas with a radio frequency driven high velocity tail population, (2) the role of non-inductive currents and energetic particle populations on MHD equilibrium and instabilities in burning plasmas, such as the effects of localized radio frequency currents or heating on island formation in neoclassical tearing modes, sawtooth oscillations and disruptions, (3) the effect of radio frequency on the control of turbulence and transport barrier formation due to localized heating, current drive, or radio frequency driven plasma flows, and (4) the effect of the plasma edge on the antenna and the ability to launch radio frequency waves in burning plasma experiments.

Collaboration and Coordination

It is expected that all applications submitted in response to this notice will be for collaborative centers involving more than one institution. Each institution involved in a proposed collaborative research project must submit a separate application, identifying the co-PI who has responsibility for the project research carried out at that institution. Also, each institution must include a separate Face Page (DOE F 4650.2), Budget Page (DOE F 4620.1), Assurance of Compliance (DOE F 1600.5), and FA CERTS for the institution. These collaborative research applications must include a common technical description of the overall research project, but must also specify the distinct scope of the work that will be carried out at each institution. The primary PI for the collaborative research project should include a summary budget for the entire project, including annual funding proposed for each institution and the annual funding proposed for Scientific Application Partnership Program activities. Synergistic collaborations with researchers in federal laboratories and Federally Funded Research and Development Centers (FFRDCs), including the DOE National Laboratories are encouraged, though no funds will be provided to these organizations under this Notice.

Further information on preparation of collaborative proposals is available in the Application Guide for the Office of Science Financial Assistance Program that is available via the Internet at: *http://www.science.doe.gov/production/grants/Colab.html.*

Since each center will be developing new physics models and computational tools that are needed for an integrated fusion simulation capability, it is important that there be good communication between the different centers. It is also important to have guidance on code capabilities and development priorities from the broader fusion, scientific and computational communities. Thus, all successful projects should plan to work with the SciDAC management structure established by the Office of Science and the Office of Fusion Energy Sciences at the beginning of the SciDAC program. The SC SciDAC management team holds an annual principal investigators meeting to ensure good communication between the SciDAC applications projects and the SciDAC applied mathematics and computer science projects. The Office of Fusion Energy Sciences' oversight of the fusion SciDAC projects includes a program advisory committee, which holds an annual coordination meeting to review the progress of each of the fusion SciDAC projects and to develop priorities for future work.

Program Funding

Approximately $1,700,000 of Fiscal Year 2004 funding will be available for grant awards in FY 2004. Additional funding for the proposed project may be available through the Office of

Advanced Scientific Computing Research for closely related research in computer science and/or applied mathematics. Applications may request support for up to three years, with out-year support contingent on the availability of funds and satisfactory progress. To support multi-disciplinary, multi-institutional efforts, annual funding levels of up to $1 million may be requested for the scientific application work and up to $200,000 per year for the Scientific Application Partnership Program work.

As required by the SC grant application guide, applicants must submit their budgets using the Budget Page (DOE Form 4620.1) with one Budget Page for each year of requested funding. The requested funding for the proposed work in computer science and applied mathematics should be included on a separate Budget Page. However, applicants are also requested to list the proposed computer science and applied mathematics costs separately in an appendix, as the Office of Advanced Scientific Computing Research may support this part of the work (up to about 20 percent of the total project cost). The Office of Fusion Energy Sciences expects to fund two or three centers, depending on the size of the awards.

Applications

Applications will be subjected to scientific merit review (peer review) and will be evaluated against the following criteria listed in descending order of importance as codified in 10 CFR part 605.10(d) (*http://www.science.doe.gov/production/grants/605index.html*):

1. Scientific and/or technical merit of the project;
2. Appropriateness of the proposed method or approach;
3. Competency of the applicant's personnel and adequacy of the proposed resources; and
4. Reasonableness and appropriateness of the proposed budget.

The evaluation under the first criterion in 10 CFR part 605.10(d), Scientific and Technical Merit, will pay particular attention to:

(a) The importance of the proposed project to the mission of the Office of Fusion Energy Sciences;

(b) The potential of the proposed project to advance the state-of-the-art in computational modeling and simulation of plasma behavior; and

(c) The need for extraordinary computing resources to address problems of critical scientific importance to the fusion program and the demonstrated abilities of the applicants to use terascale computers.

The evaluation under item 2, Appropriateness of the Proposed Method or Approach, will also consider the following elements related to quality of planning and management:

(a) If the project involves more than one scientific code, how the use of multiple codes will contribute to a coherent set of scientific objectives that are more readily achieved through the use of multiple codes;

(b) Soundness of the plan for effective management of the project;

(c) Quality of plan for ensuring communication with math and computer science projects and with other relevant SciDAC projects;

(d) Viability of plan for verifying and validating the models developed, including close coupling with experiments for ultimate validation; and

(e) Quality and clarity of proposed work schedule and deliverables.

Note that external peer reviewers are selected with regard to both their scientific expertise and the absence of conflict-of-interest issues. Non-federal reviewers may be used, and submission of an application constitutes agreement that this is acceptable to the investigator(s) and the submitting institution.

General information about development and submission of applications, eligibility, limitations, evaluations and selection processes, and other policies and procedures may be found in the Application Guide for the Office of Science (SC) Financial Assistance Program and in 10 CFR part 605. Electronic access to SC's Financial Assistance Guide and required forms is made available via the Internet using the following Web site address: *http://www.science.doe.gov/production/grants/grants.html.*

In addition, for this notice, project descriptions must be 25 pages or less, including tables and figures, but excluding attachments. The application must also contain an abstract or project summary on a separate page with the name of the principal investigator, mailing address, phone, FAX, and email listed. The application must also include letters of commitment from all non-funded collaborators (briefly describing the intended contribution of each to the research), and short curriculum vitae for the principal investigator and any co-PIs.

The Catalog of Federal Domestic Assistance Number for this program is 81.049, and the solicitation control number is ERFAP 10 CFR art 605.

Issued in Washington, DC on: January 14, 2004.

John A. Alleva,

Director, Grants & Contracts Division, Office of Science.

[FR Doc. 04–1201 Filed 1–20–04; 8:45 am]

BILLING CODE 6450–01–P

DEPARTMENT OF ENERGY

Certification of the Radiological Condition of the Chapman Valve in Indian Orchard, MA

AGENCY: U.S. Department of Energy.

ACTION: Notice of certification.

SUMMARY: The Department of Energy (DOE) has completed remedial actions to decontaminate the Chapman Valve site in Indian Orchard, Massachusetts. This property formerly was found to contain quantities of radioactive material from activities conducted for the Atomic Energy Commission's (AEC) Brookhaven National Laboratory (BNL) during the mid-1940s. Based on the analysis of all data collected, DOE has concluded that the property is in compliance with DOE radiological decontamination criteria and standards, and that no radiological restrictions on the use of the property are required.

ADDRESSES: The certification docket is available at the following locations:

U.S. Department of Energy, Public Reading Room, Room 1E–190, Forrestal Building, 1000 Independence Avenue, SW., Washington, DC 20585;

U.S. Department of Energy, DOE Information Center, 475 Oak Ridge Turnpike, Oak Ridge, Tennessee 37831; Springfield Museum and Library, 220 State Street, Springfield, Massachusetts 01103.

FOR FURTHER INFORMATION, CONTACT: Donald Mackenzie, Health Physicist, U.S. Department of Energy, Core Technical Group, EM–23/Cloverleaf Building, 1000 Independence Avenue, SW., Washington, DC 20585–2040. Telephone Number: (301) 903–7426. Fax Number: (301) 903–2385.

SUPPLEMENTARY INFORMATION: The U.S. DOE, Oak Ridge Operations Office (OR), Office of Environmental Management, has conducted remedial action at the Chapman Valve site in Indian Orchard, Massachusetts, under the Formerly Utilized Sites Remedial Action Program (FUSRAP). The objective of the program is to identify and remediate, or otherwise control, sites where residual radioactive contamination remains from activities carried out under contract to the Manhattan Engineer District (MED)/

AEC during the early years of the nation's atomic energy program.

In October 1997, the Energy and Water Appropriations Act, 1998 transferred responsibility for management of the FUSRAP program to the U.S. Army Corps of Engineers (U.S. ACE). Completion of the certification process was delayed pending preparation of a Memorandum of Understanding (MOU) between the DOE and the U.S. ACE with regard to completed, remediated sites such as the Chapman Valve property. The MOU between the U.S. DOE and the U.S. ACE regarding Program Administration and Execution of the FUSRAP program was signed by the parties in March 1999. Funding to proceed with the completion of DOE closure documentation for several FUSRAP sites, including the Chapman Valve site, was obtained from the U.S. ACE in late 2000. The closure documentation for these sites will document the cleanup and inform the public of their successful decontamination of radioactive contamination.

The Chapman Valve site was formerly owned and operated by the Chapman Valve Manufacturing Company. In 1948, the company set-aside approximately one-third of an area known as Department 40 in the western end of Building 23 for the machining of uranium rods for the AEC's BNL. Segregation of the area from other parts of the facility was achieved by installing a floor to ceiling wooden partition that was more than 50 feet high. Special modifications to the facility included building shields, quenching tanks, suction systems, cranes, and ductwork. Uranium operations were terminated on November 8, 1948. After the contract was completed, the company had in its possession over 27,000 pounds of metal scrap, oxides, and sweepings. This material was identified for removal several months after contract completion.

The Oak Ridge National Laboratory (ORNL) personnel indicated in a 1991 survey report that the residual uranium contamination found at the Chapman Valve site was typical of MED/AEC operations. This survey indicated that the contamination was limited to the interior of the segregated area within Department 40 and included floors, walls, and overhead beams. Following a review of files, it was concluded there are no indications that work with uranium metal was conducted at the site after the AEC operations were terminated.

In November and December 1994, additional radiological surveys were performed to supplement and refine survey information. Characterization findings confirm the presence of contamination located predominantly in the western end of Building 23. In addition to confirming the ORNL survey results, these findings were in agreement with historical process information obtained during interviews conducted with a former Chapman Valve supervisor. Based on this characterization data, DOE conducted remedial action at the Chapman Valve site from July to September 1995.

Post-remedial action surveys conducted in 1995 have demonstrated, and the DOE has certified, that the subject property is in compliance with the DOE radiological decontamination criteria and standards in effect at the conclusion of remedial action. These standards are established to protect members of the general public and occupants of the site, and to ensure that reasonably foreseeable future use of the site will result in no radiological exposure above applicable guidelines. Accordingly, this property is released from the FUSRAP program. These findings are supported by the DOE's Certification Docket for the Remedial Action Performed at the Chapman Valve site in Indian Orchard, Massachusetts. The DOE makes no representation regarding the condition of the site as a result of activities conducted subsequent to DOE's post-remedial action surveys.

The Certification Docket will be available for review between 9 a.m. and 4 p.m., Monday through Friday (except Federal holidays), in the DOE Public Reading Room located in 1E–190 of the Forrestal Building, 1000 Independence Avenue, SW., Washington, DC. Copies of the Certification Docket will also be available in the DOE Public Reading Room, U.S. Department of Energy, Oak Ridge Operations Office, 200 Administration Road, Oak Ridge, Tennessee, and the Springfield Museum and Library, 200 State Street, Springfield, Massachusetts.

The DOE, through the Acting Office Director, Core Technical Group (EM–23), Deputy Assistant Secretary for Environmental Cleanup and Acceleration (EM–20), the Assistant Secretary for the Office Environmental Management (EM), has issued the following statement:

Statement of Certification: Chapman Valve Site in Indian Orchard, Massachusetts

The DOE, the Oak Ridge Operations Office, the Office of Environmental Management, the Oak Ridge Reservation, the Remediation Management Group, and the U.S. DOE Office of Environmental Management (EM), Core Technical Group (EM–23), has reviewed and analyzed the radiological data obtained following remedial action at the Chapman Valve site in Indian Orchard, Massachusetts, (Deed Book 2891, Page 53, in the records of Hampden County, Massachusetts). Based on the analysis of all data collected, including post-remedial action surveys, DOE certifies that any residual contamination remaining onsite at the time remedial actions were completed falls within DOE radiological decontamination criteria and standards for use of the property without radiological restrictions. This certification of compliance provides assurance that reasonably foreseeable future use of the site will result in no radiological exposure above DOE radiological criteria and standards for protecting members of the general public and occupants of the property.

Property owned by: The Crane Company, 100 First Stamford Place, Stamford, Connecticut 06902.

Issued in Germantown, Maryland, on January 14, 2004.

Robert Goldsmith,

Director, Core Technical Group, Environmental Cleanup and Acceleration, Office of Environmental Management.

[FR Doc. 04–1203 Filed 1–20–04; 8:45 am]

BILLING CODE 6450–01–P

DEPARTMENT OF ENERGY

Energy Information Administration

Policy Statement; Disclosure Limitation Policy for Statistical Information Based on Petroleum Supply Reporting System Survey Data

AGENCY: Energy Information Administration (EIA), Department of Energy (DOE).

ACTION: Policy statement. Disclosure limitation policy for statistical information based on Petroleum Supply Reporting System survey data.

SUMMARY: The EIA is announcing its disclosure limitation policy for statistical information based on Petroleum Supply Reporting System (PSRS) survey data. Beginning with survey data for January 2004, EIA extends its 1986 policy of not applying disclosure limitation methods to statistics based on PSRS survey data to all PSRS survey information collected under a pledge of confidentiality. EIA will continue to protect information collected under a pledge of confidentiality by not publicly releasing

respondent-level survey data directly linked to names or other identifiers. With the increasing number of different petroleum products, enlarged product detail breakdowns, and declines in the number of companies reporting on many of the PSRS surveys, this policy helps to ensure EIA's continuing ability to disseminate detailed petroleum supply information. This policy supports EIA's mandate for carrying out a central, comprehensive, and unified energy data and information program responsive to users' needs for credible, reliable, and timely energy information that will improve and broaden understanding of petroleum supply in the United States.

DATES: This policy becomes effective January 21, 2004.

ADDRESSES: Requests for additional information or questions about this policy should be directed to Stefanie Palumbo. Contact by FAX (202–586–5846), e-mail (*stefanie.palumbo@eia.doe.gov*), or telephone (202–586–6866) is recommended to expedite receipt and response. The mailing address is Petroleum Division, EI–42, Forrestal Building, U.S. Department of Energy, 1000 Independence Ave., SW., Washington, DC 20585.

FOR FURTHER INFORMATION CONTACT: Requests for additional information should be directed to Ms. Palumbo at the address listed above.

SUPPLEMENTARY INFORMATION:

I. Background
II. Discussion of Comments
III. Current Actions

I. Background

The Federal Energy Administration Act of 1974 (Pub. L. 93–275, 15 U.S.C. 761 *et seq.*) and the DOE Organization Act (Pub. L. 95–91, 42 U.S.C. 7101 *et seq.*) require the EIA to carry out a centralized, comprehensive, and unified energy information program. This program collects, evaluates, assembles, analyzes, and disseminates information on energy resource reserves, production, demand, technology, and related economic and statistical information. This information is used to assess the adequacy of energy resources to meet near and longer-term domestic demands.

The EIA provides the public and other Federal agencies with opportunities to comment on collections of energy information conducted by EIA. As appropriate, EIA also requests comments on important issues relevant to the dissemination of energy information. Comments received help the EIA when preparing information collections and information products necessary to support EIA's mission.

On November 20, 2003, EIA issued a **Federal Register** notice (68 FR 65452) requesting public comments on its disclosure limitation policy for statistical information based on Petroleum Supply Reporting System (PSRS) survey data. Beginning with survey data for January 2004, EIA proposed to extend its 1986 policy of not applying disclosure limitation methods to statistics based on PSRS survey data to all PSRS survey information collected under a pledge of confidentiality. When used, disclosure limitation methods are designed to minimize the possibility that individually-identifiable information reported by a survey respondent may be inferred from published statistics. The use of disclosure limitation methods would result in some petroleum supply statistics being suppressed from public dissemination and unavailable to public and private analysts. However, by not using disclosure limitation methods, a statistic based on PSRS data from fewer than three respondents or dominated by data from one or two large respondents may be used by a knowledgeable person to estimate the data reported by a specific respondent.

In the November 20, 2003 notice, EIA discussed the proposed policy as well as EIA's reasons for proposing it. In addition to publishing the notice, EIA sent e-mail messages to PSRS survey respondents mentioning the notice and including information on accessing the notice through the Internet.

The types of information collected in the PSRS surveys and the detailed level of statistical information disseminated by EIA follow a pattern first established by the Bureau of Mines in 1917. The PSRS surveys include weekly, monthly, and annual surveys designed to provide information on petroleum supply at various levels of detail given tradeoffs between timeliness and improved accuracy. For 2004, the PSRS surveys will include the following forms:

- EIA–800, Weekly Refinery and Fractionator Report,
- EIA–801, Weekly Bulk Terminal Report,
- EIA–802, Weekly Product Pipeline Report,
- EIA–803, Weekly Crude Oil Stocks Report,
- EIA–804, Weekly Imports Report,
- EIA–805, Weekly Terminal Blenders Report,
- EIA–810, Monthly Refinery Report,
- EIA–811, Monthly Bulk Terminal Report,
- EIA–812, Monthly Product Pipeline Report,
- EIA–813, Monthly Crude Oil Report,
- EIA–814, Monthly Imports Report,
- EIA–815, Monthly Terminal Blenders Report,
- EIA–816, Monthly Natural Gas Liquids Report,
- EIA–817, Monthly Tanker and Barge Movement Report,
- EIA–819, Monthly Oxygenate Report, and
- EIA–820, Annual Refinery Report.

While the specific forms and data elements in the PSRS surveys are expected to change over time to reflect the industry, the disclosure limitation policy will apply to all PSRS survey information collected under a pledge of confidentiality beginning with survey data for January 2004. The overall purpose of the PSRS will continue to be providing credible, reliable, and timely information on the petroleum industry. Detailed information is integral to adequately understanding the U.S. petroleum supply situation.

II. Discussion of Comments

EIA received one letter. However, the letter included no comments addressing the proposed disclosure limitation policy for statistical information based on PSRS survey data.

III. Current Actions

EIA announces its policy that beginning with survey data for January 2004, EIA extends its 1986 policy of not applying disclosure limitation methods to statistics based on PSRS survey data to all PSRS survey information collected under a pledge of confidentiality. However, EIA will continue to protect information collected under a pledge of confidentiality by not publicly releasing respondent-level survey data directly linked to names or other identifiers. This policy will result in EIA providing comprehensive, detailed PSRS information to the public, and will facilitate public understanding of the petroleum industry. However, it also means that a knowledgeable person may be able to estimate the value of selected data items provided by specific respondents.

Statutory Authority: Section 52 of the Federal Energy Administration Act (Pub. L. 93–275, 15 U.S.C. 790a).

Issued in Washington, DC, January 12, 2004.

Guy F. Caruso,

Administrator, Energy Information Administration.

[FR Doc. 04–1202 Filed 1–20–04; 8:45 am]

BILLING CODE 6450–01–P

DEPARTMENT OF ENERGY

Federal Energy Regulatory Commission

[Docket No. RP02–492–004]

Algonquin Gas Transmission Company; Notice of Compliance Filing

January 13, 2004.

Take notice that on January 7, 2004, Algonquin Gas Transmission Company (Algonquin) tendered for filing as part of its FERC Gas Tariff, Fourth Revised Volume No. 1, Sub Original Sheet No. 640A, effective October 1, 2002.

Algonquin states that the purpose of this filing is to comply with the Commission's Order issued in the captioned docket on December 23, 2003, which accepted subject to condition, tariff sheets filed by Algonquin on February 19, 2003, clarifying the calculation of partial day release quantities as determined using the standards promulgated by the North American Energy Standards Board. Algonquin states that the tariff sheet filed herewith removes a proposal to add an MDTQ Overrun Charge and MDTQ Overrun Penalty in compliance with paragraph 13 of the December 23 Order.

Algonquin states that copies of its filing have been served on all affected customers, interested State commissions, and all parties on the Commission's official service list in this proceeding.

Any person desiring to protest said filing should file a protest with the Federal Energy Regulatory Commission, 888 First Street, NE., Washington, DC 20426, in accordance with section 385.211 of the Commission's rules and regulations. All such protests must be filed in accordance with section 154.210 of the Commission's regulations. Protests will be considered by the Commission in determining the appropriate action to be taken, but will not serve to make protestants parties to the proceedings. This filing is available for review at the Commission in the Public Reference Room or may be viewed on the Commission's Web site at *http://www.ferc.gov* using the eLibrary link. Enter the docket number excluding the last three digits in the docket number field to access the document. For assistance, please contact FERC Online Support at *FERCOnlineSupport@ferc.gov* or toll-free at (866) 208–3676, or TTY, contact (202) 502–8659. The Commission strongly encourages electronic filings. *See*, 18 CFR 385.2001(a)(1)(iii) and the instructions on the Commission's Web site under the eFiling link.

Magalie R. Salas,

Secretary.

[FR Doc. E4–88 Filed 1–20–04; 8:45 am]

BILLING CODE 6717–01–P

DEPARTMENT OF ENERGY

Federal Energy Regulatory Commission

[Docket No. RP04–137–000]

ANR Pipeline Company; Notice of Tariff Filing

January 13, 2004.

Take notice that on January 5, 2004, ANR Pipeline Company (ANR), tendered for filing as part of its FERC Gas Tariff, Second Revised Volume No. 1, Sixth Revised Sheet No. 91, to become effective February 5, 2004.

ANR states that it is tendering the revised tariff sheet to revise ANR's FERC Gas Tariff to include a definition of ''Term of Agreement'' to Section 1, Definitions, of the General Terms and Conditions.

Any person desiring to be heard or to protest said filing should file a motion to intervene or a protest with the Federal Energy Regulatory Commission, 888 First Street, NE., Washington, DC 20426, in accordance with § 385.214 or § 385.211 of the Commission's Rules and Regulations. All such motions or protests must be filed in accordance with § 154.210 of the Commission's Regulations. Protests will be considered by the Commission in determining the appropriate action to be taken, but will not serve to make protestants parties to the proceedings. Any person wishing to become a party must file a motion to intervene. This filing is available for review at the Commission in the Public Reference Room or may be viewed on the Commission's Web site at *http://www.ferc.gov* using the eLibrary. Enter the docket number excluding the last three digits in the docket number field to access the document. For assistance, please contact FERC Online Support at *FERCOnlineSupport@ferc.gov* or toll-free at (866) 208–3676, or TTY, contact (202) 502–8659. The Commission strongly encourages electronic filings. See, 18 CFR 385.2001(a)(1)(iii) and the instructions on the Commission's Web site under the e-Filing link.

Magalie R. Salas,

Secretary.

[FR Doc. E4–93 Filed 1–20–04; 8:45 am]

BILLING CODE 6717–01–P

DEPARTMENT OF ENERGY

Federal Energy Regulatory Commission

[Docket No. RP03–591–002]

Centerpoint Energy Gas Transmission Company; Notice of Compliance Filing

January 13, 2004.

Take notice that on January 5, 2003, CenterPoint Energy Gas Transmission Company (CEGT) tendered for filing as part of its FERC Gas Tariff, Sixth Revised Volume No. 1, Substitute First Revised Sheet No. 456, to be effective October 1, 2003.

CEGT states that the purpose of this filing is to comply with the Commission's Order issued December 18, 2003 in Docket No. RP03–591–000.

Any person desiring to protest said filing should file a protest with the Federal Energy Regulatory Commission, 888 First Street, NE., Washington, DC 20426, in accordance with section 385.211 of the Commission's Rules and Regulations. All such protests must be filed in accordance with section 154.210 of the Commission's Regulations. Protests will be considered by the Commission in determining the appropriate action to be taken, but will not serve to make protestants parties to the proceedings. This filing is available for review at the Commission in the Public Reference Room or may be viewed on the Commission's Web site at *http://www.ferc.gov* using the eLibrary link. Enter the docket number excluding the last three digits in the docket number field to access the document. For assistance, please contact FERC Online Support at *FERCOnlineSupport@ferc.gov* or toll-free at (866) 208–3676, or TTY, contact (202) 502–8659. The Commission strongly encourages electronic filings. See, 18 CFR 385.2001(a)(1)(iii) and the instructions on the Commission's Web site under the e-Filing link.

Magalie R. Salas,

Secretary.

[FR Doc. E4–92 Filed 1–20–04; 8:45 am]

BILLING CODE 6717–01–P

DEPARTMENT OF ENERGY

Federal Energy Regulatory Commission

[Docket No. PR04–6–000]

Cranberry Pipeline Corporation; Notice of Petition for Rate Approval

January 13, 2004.

Take notice that on December 16, 2003, Cranberry Pipeline Corporation (Cranberry) filed, pursuant to section 184.123(b)(2) of the Commission's Regulations, a petition for rate approval requesting that the Commission approve: (1) Rates applicable to firm and interruptible transportation service rendered on its system in the State of West Virginia; (2) firm and interruptible storage rates for both Cranberry's X–1 and Raleigh Storage Fields; and (3) a $50 low flow meter fee. These rates will be applicable to the interruptible transportation and firm and interruptible storage of natural gas under section 311(a)(2) of the Natural Gas Policy Act of 1978 (NGPA), as well as firm and interruptible transportation and storage in intrastate commerce in the State of West Virginia.

Any person desiring to participate in this rate proceeding must file a motion to intervene or protest with the Federal Energy Regulatory Commission, 888 First Street, NE., Washington DC 20426, in accordance with sections 385.214 or 385.211 of the Commission's Rules and Regulations. All such motions or protests must be filed with the Secretary of the Commission on or before the date as indicated below. Protests will be considered by the Commission in determining the appropriate action to be taken, but will not serve to make protestants parties to the proceedings. Any person wishing to become a party must file a motion to intervene. This petition for rate approval is available for review at the Commission in the Public Reference Room or may be viewed on the Commission's Web site at *http://www.ferc.gov* using the eLibrary link. Enter the docket number excluding the last three digits I the docket number field to access the document. For Assistant, call (202) 502–8222 or for TTY, (202) 502–8659. Comments, protests and interventions may be filed electronically via the Internet in lieu of paper. The Commission strongly encourages electronic filings. See, 18 CFR 385.2001(1)(iii) and the instructions on the Commission's Web site under the e-Filing link.

Comment Date: January 29, 2004.

Magalie R. Salas,

Secretary.

[FR Doc. E4–95 Filed 1–20–04; 8:45 am]

BILLING CODE 6717–01–P

DEPARTMENT OF ENERGY

Federal Energy Regulatory Commission

[Docket Nos. RP00–469–007 and RP01–22–009 and RP03–177–004]

East Tennessee Natural Gas Company; Notice of Compliance Filing

January 13, 2004.

Take notice that on December 15, 2003, East Tennessee Natural Gas Company (East Tennessee) tendered for filing *pro forma* tariff sheets to implement segmentation on its system, as required by Order No. 637 and the Order issued on May 23, 2003, in the captioned dockets.

East Tennessee states that copies of the filing have been mailed to all affected customers and interested State commissions, as well as to all parties on the official service lists compiled by the Secretary.

Any person desiring to protest said filing should file a protest with the Federal Energy Regulatory Commission, 888 First Street, NE., Washington, DC 0426, in accordance with § 385.211 of the Commission's rules and regulations. All such protests must be filed on or before the protest date as shown below. Protests will be considered by the Commission in determining the appropriate action to be taken, but will not serve to make protestants parties to the proceedings. This filing is available for review at the Commission in the Public Reference Room or may be viewed on the Commission's Web site at *http://www.ferc.gov* using the eLibrary link. Enter the docket number excluding the last three digits in the docket number field to access the document. Comments, protests and interventions may be filed electronically via the Internet in lieu of paper. For assistance, please contact FERC Online Support at *FERCOnlineSupport@ferc.gov* or toll-free at (866) 208–3676, or TTY, contact (202) 502–8659. The Commission strongly encourages electronic filings. *See*, 18 CFR 385.2001(a)(1)(iii) and the instructions on the Commission's Web site under the eFiling link.

Protest Date: January 20, 2004.

Magalie R. Salas,

Secretary.

[FR Doc. E4–84 Filed 1–20–04; 8:45 am]

BILLING CODE 6717–01–P

DEPARTMENT OF ENERGY

Federal Energy Regulatory Commission

[Docket No. Rp02–493–004]

East Tennessee Natural Gas Company; Notice of Compliance Filing

January 13, 2004.

Take notice that on January 7, 2004, East Tennessee Natural Gas Company (East Tennessee) tendered for filing as part of its FERC Gas Tariff, Second Revised Volume No. 1, Sub Original Sheet No. 147.01, effective October 1, 2002.

East Tennessee states that the purpose of this filing is to comply with the Commission's Order issued in the captioned docket on December 23, 2003, which accepted subject to condition, tariff sheets filed by East Tennessee on February 19, 2003, clarifying the calculation of partial day release quantities as determined using the standards promulgated by the North American Energy Standards Board. East Tennessee states that the tariff sheet filed herewith removes a proposal to add a TQ Overrun Charge and TQ Overrun Penalty in compliance with Paragraph 11 of the December 23 Order.

East Tennessee states that copies of its filing have been served on all affected customers, interested state commissions, and all parties on the Commission's official service list in this proceeding.

Any person desiring to protest said filing should file a protest with the Federal Energy Regulatory Commission, 888 First Street, NE., Washington, DC 20426, in accordance with Section 385.211 of the Commission's Rules and Regulations. All such protests must be filed in accordance with Section 154.210 of the Commission's Regulations. Protests will be considered by the Commission in determining the appropriate action to be taken, but will not serve to make protestants parties to the proceedings. This filing is available for review at the Commission in the Public Reference Room or may be viewed on the Commission's Web site at *http://www.ferc.gov* using the eLibrary link. Enter the docket number excluding the last three digits in the docket number field to access the document. For assistance, please contact FERC Online Support at *FERCOnlineSupport@ferc.gov* or toll-free at (866) 208–3676, or TTY, contact (202) 502–8659. The Commission strongly encourages electronic filings. See, 18 CFR 385.2001(a)(1)(iii) and the

instructions on the Commission's Web site under the e-Filing link.

Magalie R. Salas,

Secretary.

[FR Doc. E4–89 Filed 1–20–04; 8:45 am]

BILLING CODE 6717–01–P

DEPARTMENT OF ENERGY

Federal Energy Regulatory Commission

[Docket No. RP03–582–002]

Florida Gas Transmission Company; Notice of Compliance Filing

January 13, 2004.

Take notice that on January 6, 2004, Florida Gas Transmission Company (FGT) tendered for filing additional documentation and support, as directed by Commission Order issued December 23, 2003, for FGT's Unit Fuel Surcharge proposed to be effective October 1, 2003, in the instant proceeding.

Any person desiring to protest said filing should file a protest with the Federal Energy Regulatory Commission, 888 First Street, NE., Washington, DC 20426, in accordance with § 385.211 of the Commission's rules and regulations. All such protests must be filed on or before the protest date as shown below. Protests will be considered by the Commission in determining the appropriate action to be taken, but will not serve to make protestants parties to the proceedings. This filing is available for review at the Commission in the Public Reference Room or may be viewed on the Commission's Web site at *http://www.ferc.gov* using the eLibrary link. Enter the docket number excluding the last three digits in the docket number field to access the document. Comments, protests and interventions may be filed electronically via the Internet in lieu of paper. For assistance, please contact FERC Online Support at *FERCOnlineSupport@ferc.gov* or toll-free at (866) 208–3676, or TTY, contact (202) 502–8659. The Commission strongly encourages electronic filings. *See*, 18 CFR 385.2001(a)(1)(iii) and the instructions on the Commission's Web site under the e-Filing link.

Protest Date: January 20, 2004.

Magalie R. Salas,

Secretary.

[FR Doc. E4–91 Filed 1–20–04; 8:45 am]

BILLING CODE 6717–01–P

DEPARTMENT OF ENERGY

Federal Energy Regulatory Commission

[Docket No. RP04–82–001]

Gas Transmission Northwest Corporation; Notice of Compliance Filing

January 13, 2004.

Take notice that on December 31, 2003, Gas Transmission Northwest Corporation (GTN) tendered for filing as part of its FERC Gas Tariff, Third Revised Volume No. 1-A, Second Revised Sheet No. 225, to be effective December 26, 2003.

GTN states that the filing is being made to comply with the December 19, 2003, Letter Order in this proceeding.

GTN further states that a copy of this filing has been served on GTN's jurisdictional customers and interested state regulatory agencies.

Any person desiring to protest said filing should file a protest with the Federal Energy Regulatory Commission, 888 First Street, NE., Washington, DC 20426, in accordance with section 385.211 of the Commission's rules and regulations. All such protests must be filed in accordance with section 154.210 of the Commission's regulations. Protests will be considered by the Commission in determining the appropriate action to be taken, but will not serve to make protestants parties to the proceedings. This filing is available for review at the Commission in the Public Reference Room or may be viewed on the Commission's Web site at *http://www.ferc.gov* using the eLibrary link. Enter the docket number excluding the last three digits in the docket number field to access the document. For assistance, please contact FERC Online Support at *FERCOnlineSupport@ferc.gov* or toll-free at (866) 208–3676, or TTY, contact (202) 502–8659. The Commission strongly encourages electronic filings. *See*, 18 CFR 385.2001(a)(1)(iii) and the instructions on the Commission's Web site under the eFiling link.

Magalie R. Salas,

Secretary.

[FR Doc. E4–79 Filed 1–20–04; 8:45 am]

BILLING CODE 6717–01–P

DEPARTMENT OF ENERGY

Federal Energy Regulatory Commission

[Docket No. RP02–361–019]

Gulfstream Natural Gas System, L.L.C.; Notice of Negotiated Rates

January 13, 2004.

Take notice that on January 8, 2004, Gulfstream Natural Gas System, L.L.C. (Gulfstream) tendered for filing as part of its FERC Gas Tariff, Original Volume No. 1, Original Sheet Nos. 8P and 8Q, reflecting an effective date of January 1, 2004.

Gulfstream states that this filing is being made to implement a loan negotiated rate transaction under Rate Schedule PALS pursuant to Section 31 of the General Terms and Conditions of Gulfstream's FERC Gas Tariff. Gulfstream states that Original Sheet Nos. 8P and 8Q identify and describe the negotiated rate agreement, including the exact legal name of the relevant shipper, the negotiated rate, the rate schedule, the contract term, and the contract quantity. Gulfstream also states that Original Sheet Nos. 8P and 8Q include footnotes where necessary to provide further details on the agreement listed thereon.

Gulfstream states that copies of its filing have been mailed to all affected customers and interested State commissions.

Any person desiring to be heard or to protest said filing should file a motion to intervene or a protest with the Federal Energy Regulatory Commission, 888 First Street, NE., Washington, DC 20426, in accordance with § 385.214 or § 385.211 of the Commission's Rules and Regulations. All such motions or protests must be filed in accordance with § 154.210 of the Commission's Regulations. Protests will be considered by the Commission in determining the appropriate action to be taken, but will not serve to make protestants parties to the proceedings. Any person wishing to become a party must file a motion to intervene. This filing is available for review at the Commission in the Public Reference Room or may be viewed on the Commission's Web site at *http://www.ferc.gov* using the eLibrary. Enter the docket number excluding the last three digits in the docket number field to access the document. For assistance, please contact FERC Online Support at *FERCOnlineSupport@ferc.gov* or toll-free at (866) 208–3676, or TTY, contact (202) 502–8659. The Commission strongly encourages electronic filings. *See,* 18 CFR 385.2001(a)(1)(iii) and the

instructions on the Commission's Web site under the e-Filing link.

Magalie R. Salas,

Secretary.

[FR Doc. E4–85 Filed 1–20–04; 8:45 am]

BILLING CODE 6717–01–P

DEPARTMENT OF ENERGY

Federal Energy Regulatory Commission

[Docket No. RP02–361–020]

Gulfstream Natural Gas System, L.L.C.; Notice of Negotiated Rate

January 13, 2004.

Take notice that on January 8, 2004, Gulfstream Natural Gas System, L.L.C. (Gulfstream) tendered for filing as part of its FERC Gas Tariff, Original Volume No. 1, Original Sheet No. 8R, reflecting an effective date of January 1, 2004.

Gulfstream states that this filing is being made to implement negotiated rate transactions under Rate Schedules ITS and PALS, respectively, pursuant to Section 31 of the General Terms and Conditions of Gulfstream's FERC Gas Tariff.

Gulfstream states that copies of its filing have been mailed to all affected customers and interested state commissions.

Any person desiring to be heard or to protest said filing should file a motion to intervene or a protest with the Federal Energy Regulatory Commission, 888 First Street, NE., Washington, DC 20426, in accordance with Sections 385.214 or 385.211 of the Commission's Rules and Regulations. All such motions or protests must be filed in accordance with Section 154.210 of the Commission's Regulations. Protests will be considered by the Commission in determining the appropriate action to be taken, but will not serve to make protestants parties to the proceedings. Any person wishing to become a party must file a motion to intervene. This filing is available for review at the Commission in the Public Reference Room or may be viewed on the Commission's Web site at *http://www.ferc.gov* using the eLibrary. Enter the docket number excluding the last three digits in the docket number field to access the document. For assistance, please contact FERC Online Support at *FERCOnlineSupport@ferc.gov* or toll-free at (866) 208–3676, or TTY, contact (202) 502–8659. The Commission strongly encourages electronic filings. See, 18 CFR 385.2001(a)(1)(iii) and the instructions on the Commission's Web site under the e-Filing link.

Magalie R. Salas,

Secretary.

[FR Doc. E4–86 Filed 1–20–04; 8:45 am]

BILLING CODE 6717–01–P

DEPARTMENT OF ENERGY

Federal Energy Regulatory Commission

[Docket No. RP00–337–007]

Kern River Gas Transmission Company; Notice of Compliance Filing

January 13, 2004.

Take notice that on January 8, 2004, Kern River Gas Transmission Company (Kern River) tendered for filing as part of its FERC Gas Tariff, Second Revised Volume No. 1, the following tariff sheets, to be effective October 1, 2003.

Substitute Original Sheet No. 8
Substitute Original Sheet No. 69-E
Substitute Original Sheet No. 69-F
Substitute Original Sheet No. 339
Substitute Original Sheet No. 340
Substitute Original Sheet No. 342

Kern River states that the purpose of this filing is to comply with the Commission's December 24, 2003, ''Order Accepting Tariff Sheets Subject to Further Revision'' by submitting revised tariff sheets pertaining to Kern River's Rate Schedule PAL (park and loan) service. The proposed revisions will exempt a shipper from penalties for failure to repay loaned gas or failure to withdraw parked gas if that shipper submits a valid nomination, and Kern River fails to accept and schedule that nomination due to capacity constraints on Kern River's system.

Kern River states that it has served a copy of this filing upon each person designated on the official service list compiled by the Secretary in this proceeding.

Any person desiring to protest said filing should file a protest with the Federal Energy Regulatory Commission, 888 First Street, NE., Washington, DC 20426, in accordance with § 385.211 of the Commission's rules and regulations. All such protests must be filed in accordance with § 154.210 of the Commission's regulations. Protests will be considered by the Commission in determining the appropriate action to be taken, but will not serve to make protestants parties to the proceedings. This filing is available for review at the Commission in the Public Reference Room or may be viewed on the Commission's Web site at *http://www.ferc.gov* using the eLibrary link. Enter the docket number excluding the last three digits in the docket number field to access the document. For assistance, please contact FERC Online Support at *FERCOnlineSupport@ferc.gov* or toll-free at (866) 208–3676, or TTY, contact (202) 502–8659. The Commission strongly encourages electronic filings. *See*, 18 CFR 385.2001(a)(1)(iii) and the instructions on the Commission's Web site under the e-Filing link.

Magalie R. Salas,

Secretary.

[FR Doc. E4–82 Filed 1–20–04; 8:45 am]

BILLING CODE 6717–01–P

DEPARTMENT OF ENERGY

Federal Energy Regulatory Commission

[Docket No. RP02–489–004]

Maritimes & Northeast Pipeline, L.L.C.; Notice of Compliance Filing

January 13, 2004.

Take notice that on January 7, 2004, Maritimes & Northeast Pipeline, L.L.C. (Maritimes) tendered for filing as part of its FERC Gas Tariff, First Revised Volume No. 1, Sub Original Sheet No. 249B, effective October 1, 2002.

Maritimes states that the purpose of this filing is to comply with the Commission's Order issued in the captioned docket on December 23, 2003, which accepted subject to condition, tariff sheets filed by Maritimes on February 19, 2003, clarifying the calculation of partial day release quantities as determined using the standards promulgated by the North American Energy Standards Board.

Maritimes states that the tariff sheet filed herewith removes a proposal to add an MDTQ Overrun Charge and MDTQ Overrun Penalty in compliance with paragraph 17 of the December 23 Order. Maritimes states that copies of its filing have been served on all affected customers, interested State commissions, and all parties on the Commission's official service list in this proceeding.

Any person desiring to protest said filing should file a protest with the Federal Energy Regulatory Commission, 888 First Street, NE., Washington, DC 20426, in accordance with § 385.211 of the Commission's Rules and Regulations. All such protests must be filed in accordance with § 154.210 of the Commission's regulations. Protests will be considered by the Commission in determining the appropriate action to be taken, but will not serve to make

protestants parties to the proceedings. This filing is available for review at the Commission in the Public Reference Room or may be viewed on the Commission's Web site at *http://www.ferc.gov* using the eLibrary link. Enter the docket number excluding the last three digits in the docket number field to access the document. For assistance, please contact FERC Online Support at *FERCOnlineSupport@ferc.gov* or toll-free at (866) 208–3676, or TTY, contact (202) 502–8659. The Commission strongly encourages electronic filings. *See*, 18 CFR 385.2001(a)(1)(iii) and the instructions on the Commission's Web site under the e-Filing link.

Magalie R. Salas,

Secretary.

[FR Doc. E4–87 Filed 1–20–04; 8:45 am]

BILLING CODE 6717–01–P

DEPARTMENT OF ENERGY

Federal Energy Regulatory Commission

[Docket No. RP00–338–003]

Mojave Pipeline Company; Notice of Proposed Changes in FERC Gas Tariff

January 13, 2004.

Take notice that on December 10, 2003, Mojave Pipeline Company tendered for filing Second Sub First Revised Sheet No. 239 as part of its FERC Gas Tariff, Second Revised Volume No. 1. This tariff sheet replaces tariff provisions that were inadvertently deleted in a recent filing.

Any person desiring to protest said filing should file a protest with the Federal Energy Regulatory Commission, 888 First Street, NE., Washington, DC 20426, in accordance with Section 385.211 of the Commission's Rules and Regulations. All such protests must be filed on or before the protest date as shown below. Protests will be considered by the Commission in determining the appropriate action to be taken, but will not serve to make protestants parties to the proceedings. This filing is available for review at the Commission in the Public Reference Room or may be viewed on the Commission's Web site at *http://www.ferc.gov* using the eLibrary link. Enter the docket number excluding the last three digits in the docket number field to access the document. Comments, protests and interventions may be filed electronically via the Internet in lieu of paper. For assistance, please contact FERC Online Support at *FERCOnlineSupport@ferc.gov* or toll-free at (866) 208–3676, or TTY, contact (202) 502–8659. The Commission strongly encourages electronic filings. *See,* 18 CFR 385.2001(a)(1)(iii) and the instructions on the Commission's Web site under the e-Filing link.

Protest Date: January 20, 2003.

Magalie R. Salas,

Secretary.

[FR Doc. E4–83 Filed 1–20–04; 8:45 am]

BILLING CODE 6717–01–P

DEPARTMENT OF ENERGY

Federal Energy Regulatory Commission

[Docket No. RP04–138–000]

Tennessee Gas Pipeline Company; Notice of Tariff Filing

January 13, 2004.

Take notice that on January 6, 2004, Tennessee Gas Pipeline Company (Tennessee), tendered for filing as part of its FERC Gas Tariff, Fifth Revised Volume No. 1, Original Sheet No. 339C, to be made effective February 12, 2004.

Tennessee states that it is tendering the revised tariff sheet in order to clearly set forth the criteria that would give Tennessee the right to terminate a capacity release transaction in the event of the termination of a releasing shipper's contract.

Any person desiring to be heard or to protest said filing should file a motion to intervene or a protest with the Federal Energy Regulatory Commission, 888 First Street, NE., Washington, DC 20426, in accordance with § 385.214 or 385.211 of the Commission's rules and regulations. All such motions or protests must be filed in accordance with § 154.210 of the Commission's regulations. Protests will be considered by the Commission in determining the appropriate action to be taken, but will not serve to make protestants parties to the proceedings. Any person wishing to become a party must file a motion to intervene. This filing is available for review at the Commission in the Public Reference Room or may be viewed on the Commission's Web site at *http://www.ferc.gov* using the eLibrary. Enter the docket number excluding the last three digits in the docket number field to access the document. For assistance, please contact FERC Online Support at *FERCOnlineSupport@ferc.gov* or toll-free at (866) 208–3676, or TTY, contact (202) 502–8659. The Commission strongly encourages electronic filings. *See*, 18 CFR 385.2001(a)(1)(iii) and the instructions on the Commission's Web site under the e-Filing link.

Magalie R. Salas,

Secretary.

[FR Doc. E4–94 Filed 1–20–04; 8:45 am]

BILLING CODE 6717–01–P

DEPARTMENT OF ENERGY

Federal Energy Regulatory Commission

[Docket No. RP02–494–004]

Texas Eastern Transmission, LP; Notice of Compliance Filing

January 13, 2004.

Take notice that on January 7, 2004, Texas Eastern Transmission, LP (Texas Eastern) tendered for filing as part of its FERC Gas Tariff, Seventh Revised Volume No. 1, Sub Original Sheet No. 533B, effective October 1, 2002.

Texas Eastern states that the purpose of this filing is to comply with the Commission's Order issued in the captioned docket on December 23, 2003, which accepted subject to condition, tariff sheets filed by Texas Eastern on February 19, 2003, clarifying the calculation of partial day release quantities as determined using the standards promulgated by the North American Energy Standards Board. Texas Eastern states that the tariff sheet filed herewith removes a proposal to add an MDQ Overrun Charge and MDQ Overrun Penalty in compliance with paragraph 18 of the December 23 Order.

Texas Eastern states that copies of its filing have been served on all affected customers, interested state commissions, and all parties on the Commission's official service list in this proceeding.

Any person desiring to protest said filing should file a protest with the Federal Energy Regulatory Commission, 888 First Street, NE., Washington, DC 20426, in accordance with section 385.211 of the Commission's rules and regulations. All such protests must be filed in accordance with section 154.210 of the Commission's regulations. Protests will be considered by the Commission in determining the appropriate action to be taken, but will not serve to make protestants parties to the proceedings. This filing is available for review at the Commission in the Public Reference Room or may be viewed on the Commission's Web site at *http://www.ferc.gov* using the eLibrary link. Enter the docket number excluding the last three digits in the docket number field to access the document. For assistance, please contact FERC

Online Support at *FERCOnlineSupport@ferc.gov* or toll-free at (866) 208–3676, or TTY, contact (202) 502–8659. The Commission strongly encourages electronic filings. *See*, 18 CFR 385.2001(a)(1)(iii) and the instructions on the Commission's Web site under the eFiling link.

Magalie R. Salas,

Secretary.

[FR Doc. E4–90 Filed 1–20–04; 8:45 am]

BILLING CODE 6717–01–P

DEPARTMENT OF ENERGY

Federal Energy Regulatory Commission

Notice of Application Accepted for Filing and Soliciting Motions To Intervene, Protests, and Comments

January 13, 2004.

Take notice that the following hydroelectric application has been filed with the Commission and is available for public inspection:

a. *Type of Application:* Preliminary permit.

b. *Project No.:* 12337–000.

c. *Date filed:* August 14, 2003.

d. *Applicant:* Fourth Branch Associates.

e. *Name of Project:* Mechanicsville Project.

f. *Location:* On the Hudson River, in Saratoga and Rensselaer County, New York. The project is additional capacity to the already licensed Mechanicsville Project FERC No. 6032 operated by Fourth Branch Associates. The applicant proposed to develop this project so that it will impact the current licensed project.

g. *Filed Pursuant to:* Federal Power Act, 16 U.S.C. 791(a)—825(r).

h. *Applicant Contact:* Mr. James A. Besha, Fourth Branch Associates, 455 New Karner Road, Albany, NY 12205, (518) 456–7712.

i. *FERC Contact:* Robert Bell, (202) 502–6062.

j. *Deadline for filing comments, protests, and motions to intervene:* 60 days from the issuance date of this notice.

The Commission's rules of practice and procedure require all interveners filing documents with the Commission to serve a copy of that document on each person in the official service list for the project. Further, if an intervener files comments or documents with the Commission relating to the merits of an issue that may affect the responsibilities of a particular resource agency, they must also serve a copy of the document on that resource agency.

k. *Description of Project:* The proposed project would consist of: (1) An existing 700-foot-long, 15-foot-high earth fill dam section, 95-foot-long 26-foot-high concrete gravity dam section, and 979-foot-long concrete gravity spillway section, (2) proposed one-foot-high flashboard, (3) an existing impoundment having a surface area of 275 acres with a storage capacity of 1,375 acre-feet and normal water surface elevation of 48.0 feet National Geographic Vertical Datum, (4) a proposed intake structure, (5) a proposed powerhouse containing two generating units having a total installed capacity of 17 megawatts, (6) a proposed tailrace, (7) a proposed 200-foot-long, 34.5 kilovolt transmission line, and (8) appurtenant facilities. Applicant estimates that the average annual generation would be 69.663 gigawatt-hours and would be sold to a local utility.

l. *Locations of Applications:* A copy of the application is available for inspection and reproduction at the Commission in the Public Reference Room, located at 888 First Street, NE., Room 2A, Washington DC 20426, or by calling (202) 502–8371. This filing may also be viewed on the Commission's Web site at *http://www.ferc.gov* using the ''eLibrary'' link. Enter the docket number excluding the last three digits in the docket number field to access the document. For assistance, call toll-free 1–866–208–3676 or e-mail *FERCOnlineSupport@ferc.gov*. For TTY, call (202) 502–8659. A copy is also available for inspection and reproduction at the address in item h. above.

m. Individuals desiring to be included on the Commission's mailing list should so indicate by writing to the Secretary of the Commission.

n. *Competing Preliminary Permit*—Anyone desiring to file a competing application for preliminary permit for a proposed project must submit the competing application itself, or a notice of intent to file such an application, to the Commission on or before the specified comment date for the particular application (*see* 18 CFR 4.36). Submission of a timely notice of intent allows an interested person to file the competing preliminary permit application no later than 30 days after the specified comment date for the particular application. A competing preliminary permit application must conform with 18 CFR 4.30(b) and 4.36.

o. *Competing Development Application*—Any qualified development applicant desiring to file a competing development application must submit to the Commission, on or before a specified comment date for the particular application, either a competing development application or a notice of intent to file such an application. Submission of a timely notice of intent to file a development application allows an interested person to file the competing application no later than 120 days after the specified comment date for the particular application. A competing license application must conform with 18 CFR 4.30(b) and 4.36.

p. *Notice of Intent*—A notice of intent must specify the exact name, business address, and telephone number of the prospective applicant, and must include an unequivocal statement of intent to submit, if such an application may be filed, either a preliminary permit application or a development application (specify which type of application). A notice of intent must be served on the applicant(s) named in this public notice.

q. *Proposed Scope of Studies under Permit* — A preliminary permit, if issued, does not authorize construction. The term of the proposed preliminary permit would be 36 months. The work proposed under the preliminary permit would include economic analysis, preparation of preliminary engineering plans, and a study of environmental impacts. Based on the results of these studies, the Applicant would decide whether to proceed with the preparation of a development application to construct and operate the project.

r. *Comments, Protests, or Motions to Intervene*—Anyone may submit comments, a protest, or a motion to intervene in accordance with the requirements of rules of practice and procedure, 18 CFR 385.210, .211, .214. In determining the appropriate action to take, the Commission will consider all protests or other comments filed, but only those who file a motion to intervene in accordance with the Commission's rules may become a party to the proceeding. Any comments, protests, or motions to intervene must be received on or before the specified comment date for the particular application.

Comments, protests and interventions may be filed electronically via the Internet in lieu of paper; *see* 18 CFR 385.2001 (a)(1)(iii) and the instructions on the Commission's Web site under ''e-filing'' link. The Commission strongly encourages electronic filing.

s. *Filing and Service of Responsive Documents*—Any filings must bear in all capital letters the title ''COMMENTS'', ''RECOMMENDATIONS FOR TERMS AND CONDITIONS'', ''PROTEST'', OR

''MOTION TO INTERVENE'', as applicable, and the Project Number of the particular application to which the filing refers. Any of the above-named documents must be filed by providing the original and the number of copies provided by the Commission's regulations to: The Secretary, Federal Energy Regulatory Commission, 888 First Street, NE., Washington, DC 20426. A copy of any motion to intervene must also be served upon each representative of the Applicant specified in the particular application.

t. *Agency Comments*—Federal, State, and local agencies are invited to file comments on the described application. A copy of the application may be obtained by agencies directly from the Applicant. If an agency does not file comments within the time specified for filing comments, it will be presumed to have no comments. One copy of an agency's comments must also be sent to the Applicant's representatives.

Magalie R. Salas,

Secretary.

[FR Doc. E4–80 Filed 1–20–04;8:45 am]

BILLING CODE 6717–01–P

DEPARTMENT OF ENERGY

Federal Energy Regulatory Commission

Notice of Application for Surrender of Exemption and Soliciting Comments, Motions To Intervene, and Protests

January 13, 2004.

Take notice that the following hydroelectric application has been filed with the Commission and is available for public inspection:

a. *Application Type:* Surrender of Exemption (5 MW or Less).

b. *Project No.:* 6429–002.

c. *Date Filed:* November 25, 2003.

d. *Applicant:* Michael P. Goodman.

e. *Name of Project:* Russell Mill Pond.

f. *Location:* Located on the Eel River, in Plymouth County, Massachusetts.

g. *Filed Pursuant to:* Federal Power Act, 16 U.S.C. 791a–825r.

h. *Applicant Contact:* Michael P. Goodman, 4 Russell Mills Road, Plymouth, Massachusetts 02360, (508) 746–7563.

i. *FERC Contact:* Regina Saizan, (202) 502–8765.

j. *Status of Environmental Analysis:* This application is ready for environmental analysis at this time, and the Commission is requesting comments, reply comments, and recommendations for terms and conditions.

k. *Deadline for filing responsive documents:* The Commission directs, pursuant to Section 4.34(b) of the Regulations (*see* Order No. 533 issued May 8, 1991, 56 FR 23108, May 20, 1991) that all comments, motions to intervene, protests, and recommendations for terms and conditions concerning the application be filed with the Commission by February 13, 2004. All reply comments must be filed with the Commission by March 1, 2004.

Comments, protests, and interventions may be filed electronically via the Internet in lieu of paper; *see* 18 CFR 385.2001(a)(1)(iii) and the instructions on the Commission's Web site under the ''e-Filing'' link. The Commission strongly encourages electronic filings.

The Commission's Rules of Practice and Procedure require all interveners filing documents with the Commission to serve a copy of that document on each person in the official service list for the project. Further, if an intervener files comments or documents with the Commission relating to the merits of an issue that may affect the responsibilities of a particular resource agency, they must also serve a copy of the document on that resource agency.

l. *Description of Proposed Action:* The existing project consists of: (1) A 25-foot-high, 400-foot-long earthfill dam; (2) a 30-acre reservoir; (3) an 8-foot-wide intake structure with an adjacent overflow spillway in the flume wall (flume spillway); (4) a 24-inch-diameter, 18-foot-long steel penstock; (5) a powerhouse containing an 18-kW turbine-generator; (6) a fish ladder; and (7) appurtenant facilities. The applicant seeks to surrender the exemption because the project is no longer economically feasible.

m. *Locations of Application:* A copy of the application is available for inspection and reproduction at the Commission in the Public Reference Room, located at 888 First Street NE, Room 2A, Washington, DC 20426, or by calling (202) 502–8371. This filing may also be viewed on the Commission's Web site at *http://www.ferc.gov* using the ''eLibrary'' link. Enter the docket number, here P–6429, in the docket number field to access the document. For assistance, call toll-free 1–866–208–3676 or e-mail *FERCOnlineSupport@ferc.gov*. For TTY, call (202) 502–8659. A copy is also available for inspection and reproduction at the address in item h. above.

n. Individuals desiring to be included on the Commission's mailing list should so indicate by writing to the Secretary of the Commission.

o. *Comments, Protests, or Motions To Intervene*—Anyone may submit comments, a protest, or a motion to intervene in accordance with the requirements of Rules of Practice and Procedure, 18 CFR 385.210, .211, .214. In determining the appropriate action to take, the Commission will consider all protests or other comments filed, but only those who file a motion to intervene in accordance with the Commission's Rules may become a party to the proceeding. Any comments, protests, or motions to intervene must be received on or before the specified comment date for the particular application.

p. *Filing and Service of Responsive Documents*—Any filings must bear in all capital letters the title ''COMMENTS'', ''REPLY COMMENTS'', ''RECOMMENDATIONS FOR TERMS AND CONDITIONS'', ''PROTEST'', OR ''MOTION TO INTERVENE'', as applicable, and the Project Number of the particular application to which the filing refers. Any of the above-named documents must be filed by providing the original and eight copies to: Magalie R. Salas, Secretary, Federal Energy Regulatory Commission, 888 First Street, NE., Washington, DC 20426. An additional copy must be sent to the Director, Division of Hydropower Administration and Compliance, Federal Energy Regulatory Commission, at the above-mentioned address. A copy of any motion to intervene must also be served upon each representative of the Applicant specified in the particular application.

q. *Agency Comments*—Federal, state, and local agencies are invited to file comments on the described applications. A copy of the applications may be obtained by agencies directly from the Applicant. If any agency does not file comments within the time specified for filing comments, it will be presumed to have no comments. One copy of an agency's comments must also be sent to the Applicant's representatives.

Magalie R. Salas,

Secretary.

[FR Doc. E4–81 Filed 1–20–04:8:45 am]

BILLING CODE 6717–01–P

DEPARTMENT OF ENERGY

Federal Energy Regulatory Commission

Notice of Application for Transfer of License and Soliciting Comments, Motions To Intervene, and Protests

January 13, 2004.

Take notice that the following hydroelectric application has been filed with the Commission and is available for public inspection:

a. *Application Type:* Transfer of license.

b. *Project No:* 11214–009.

c. *Date Filed:* August 19, 2003. The license was reinstated by order issued January 9, 2004.

d. *Applicants:* Southwestern Electric Cooperative, Inc. (Southwestern, Transferor) City of Carlyle, Illinois (Carlyle, Transferee).

e. *Name and Location of Project:* The Carlyle Hydroelectric Project is to be located at the U.S. Army Corps of Engineers' Carlyle Dam on the Kaskaskia River near the City of Carlyle in Clinton County, Illinois.

f. *Filed Pursuant to:* Federal Power Act, 16 U.S.C. 791a—825r.

g. *Applicant Contacts:* For Southwestern: Michael Postar, Duncan, Weinberg, Genzer & Pembroke, P.C., 1615 M Street, NW., Suite 800, Washington, DC 20036, (202) 467–6370. For the City of Carlyle: Donald H. Clarke, Law Office of GKRSE, 1500 K Street, NW., Suite 330, Washington, DC 20005, (202) 408–5400.

h. *FERC Contact:* James Hunter, (202) 502–6086.

i. *Deadline for filing comments, protests, and motions to intervene:* February 13, 2004.

All documents (original and eight copies) should be filed with: Magalie R. Salas, Secretary, Federal Energy Regulatory Commission, 888 First Street, NE., Washington, DC 20426. Comments, protests, and interventions may be filed electronically via the Internet in lieu of paper; *see* 18 CFR 385.2001(a)(1)(iii) and the instructions on the Commission's Web site under the ''e-Filing'' link. The Commission strongly encourages electronic filings. Please include the project number (P–11214–009) on any comments or motions filed.

The Commission's rules of practice and procedure require all interveners filing a document with the Commission to serve a copy of that document on each person in the official service list for the project. Further, if an intervener files comments or documents with the Commission relating to the merits of an issue that may affect the responsibilities of a particular resource agency, they must also serve a copy of the documents on that resource agency.

j. *Description of Application:* The Applicants request Commission approval to transfer the project license from Southwestern to Carlyle.

k. This filing is available for review at the Commission in the Public Reference Room or may be viewed on the Commission's Web site at *http://www.ferc.gov* using the ''FERRIS'' link. Enter the docket number (P–11214) in the docket number field to access the document. For assistance, call toll-free 1–866–208–3676 or e-mail *FERCOnlineSupport@ferc.gov*. For TTY, call (202) 502–8659. A copy is also available for inspection and reproduction at the addresses in item g. above.

l. Individuals desiring to be included on the Commission's mailing list should so indicate by writing to the Secretary of the Commission.

m. *Comments, Protests, or Motions to Intervene*—Anyone may submit comments, a protest, or a motion to intervene in accordance with the requirements of rules of practice and procedure, 18 CFR 385.210, .211, .214. In determining the appropriate action to take, the Commission will consider all protests or other comments filed, but only those who file a motion to intervene in accordance with the Commission's Rules may become a party to the proceeding. Any comments, protests, or motions to intervene must be received on or before the specified comment date for the particular application.

n. *Filing and Service of Responsive Documents*—Any filings must bear in all capital letters the title ''COMMENTS'', ''PROTEST'', OR ''MOTION TO INTERVENE'', as applicable, and the Project Number of the particular application to which the filing refers. Any of the above-named documents must be filed by providing the original and eight copies to: the Secretary, Federal Energy Regulatory Commission, 888 First Street, NE., Washington, DC 20426. A copy of any motion to intervene must also be served upon each representative of the Applicant specified in the particular application.

o. *Agency Comments*—Federal, State, and local agencies are invited to file comments on the described application. A copy of the application may be obtained by agencies directly from the Applicant. If an agency does not file comments within the time specified for filing comments, it will be presumed to have no comments. One copy of an agency's comments must also be sent to the Applicant's representatives.

Magalie R. Salas,

Secretary.

[FR Doc. E4–96 Filed 1–20–04; 8:45 am]

BILLING CODE 6717–01–P

EXPORT-IMPORT BANK OF THE UNITED STATES

[Public Notice 59]

Agency Information Collection Activities; Submission for OMB Review, Comment Request

AGENCY: Export-Import Bank of the United States (Ex-Im Bank).

ACTION: Notice and request for comments.

SUMMARY: Under the provisions of the Paperwork Reduction Act of 1995, the Export-Import Bank of the United States is submitting to the Office of Management and Budget (OMB) a request to review and approve a revised exporter and banker survey. The purpose of the survey is to fulfill a statutory mandate (The Export-Import Bank Act of 1945, as amended, 12 U.S.C. 635) which directs Ex-Im Bank to report annually to the U.S. Congress any action taken toward providing export credit programs that are competitive with those offered by official foreign export credit agencies. The Act further stipulates that the annual report on competitiveness should include the results of a survey of U.S. exporters and U.S. commercial lending institutions which provide export credit to determine their experience in meeting financial competition from other countries whose exporters compete with U.S. exporters.

Accordingly, Ex-Im Bank is requesting that the proposed survey (EIB No. 00–02) be sent to approximately 50 respondents, split equally between bankers and exporters. The revised survey is similar to the previous survey, as it asks bankers and exporters to evaluate the competitiveness of Ex-Im Bank's programs vis-á-vis foreign export credit agencies. However, it has been modified in order to account for newer policies and to capture enough information to provide a better analysis of our competitiveness. In addition, the survey will be available on Ex-Im Bank's Web site, *www.exim.gov,* with recipients encouraged to respond on-line as well.

DATES: Written comments should be received on or before February 13, 2004, to be assured of consideration.

ADDRESSES: Direct all requests for additional information to Alan Jensen,

Export-Import Bank of the U.S., 811 Vermont Avenue, NW., room 1279, Washington, DC 20571, (202) 565–3767. Direct all comments to David Rostker, Office of Management and Budget, Office of Information and Regulatory Affairs, NEOB Room 10202, Washington, DC 20503, (202) 395–3897.

SUPPLEMENTARY INFORMATION: With respect to the proposed collection of information, Ex-Im bank invites comments as to:

—Whether the proposed collection of information is necessary for the proper performance of the functions of Ex-Im Bank, including whether the information will have a practical use;

—The accuracy of Ex-Im Bank's estimate of the burden of the proposed collection of information, including the validity of the methodology and assumptions used;

—Ways to enhance the quality, usefulness, and clarity of the information to be collected; and

—Ways to minimize the burden of collection of information on those who are to respond, including through the use of appropriate automated electronic, mechanical, or other technological collection techniques or other forms of information technology; e.g., permitting electronic submission of responses.

Title and Form Number: 2003 Exporter & Banker Survey of Ex-Im Bank Competitiveness, EIB Form 00–02.

OMB Number: 3048–0004.

Type of Review: Revision of a currently approved collection.

Annual Number of Respondents: 50.

Annual Burden Hours: 50.

Frequency of Reporting or Use: Annual Survey.

Dated: January 14, 2004.

Solomon Bush,

Agency Clearance Officer.

BILLING CODE 6690–01–M

OMB #3048-0004

PART 1 – EXPORTER/BANKER COMPANY PROFILE

[Note: See "Part 1 Attachment" for answer choices to questions 1-6 below.]

Company Name _____ Address _____

Years in Business [ ] Years in Exporting/Trade Finance [ ]

Person Completing the Survey _____ Title _____

Phone Number _____ Fax Number _____ Email _____

Have you used Ex-Im Bank's medium-term or long-term program in the previous calendar year? [ ]

Which medium/long-term programs did you use? Check all that apply:

☐ Insurance ☐ Loans ☐ Guarantee

Compared to 2002, my 2003 volume of exports/trade finance was: [1.]

EXPORTERS

2003 total sales volume [2.] 2003 total U.S. export sales volume [3.]

% of total export sales volume that was Ex-Im Bank supported [4.]

BANKERS

2003 total export credit extended with a term over one year [5.]

% of 2003 total export credit extended with a term over one year that was Ex-Im Bank supported [6.]

EIB Form 00-02

OMB #3048-0004

PART 2–EXPERIENCE WITH FOREIGN EXPORT CREDIT AGENCIES (ECAs)

[Note: See "Part 2 Attachment" for the possible answer choices to the questions below.]

Please indicate your experience in the previous calendar year in using, receiving support from or working with other official ECAs. Please select the appropriate answer for each ECA listed.

Canada (EDC)		Japan (NEXI)	
France (Coface)		UK (ECGD)	
Germany (Hermes)		Other (identify)	
Italy (SACE)		Other (identify)	
Japan (JBIC)		Other (identify)	

Please indicate your experience in the previous calendar year in facing competitors that received support from foreign official ECAs. Please select the appropriate answer for each ECA listed.

Canada (EDC)		Japan (NEXI)	
France (Coface)		UK (ECGD)	
Germany (Hermes)		Other (identify)	
Italy (SACE)		Other (identify)	
Japan (JBIC)		Other (identify)	

OMB #3048-0004

PART 2 (Continued)

Why do you approach Ex-Im Bank for support? Please indicate the approximate frequency with which each of the following challenges or needs arise, as well as a typical region or situation that presents such a challenge/need.

[Note: When the survey is being completed on-line, if the cursor is placed over the question further explanation of that question will "pop up." The more detailed explanations are found in the "Part 2 Attachment."]

Challenge/Need	%	Typical Region or Situation
Face competition from companies that receive ECA support:	_____	_____
Find a lack of useful private market financing available:	_____	_____
Need continuing U.S. government involvement:	_____	_____
Other (Please identify):	_____	_____
Other (Please identify):	_____	_____

EIB Form 00-02

OMB #3048-0004

PART 3 – EXPERIENCE WITH EX-IM BANK AS COMPARED TO FOREIGN ECAs

Using the guide below, please grade Ex-Im Bank as it compares to other ECAs in the following categories:

[Note: When the survey is being completed on-line, if the cursor is placed over an element in which Ex-Im Bank is to be graded then the definition of that element will "pop up." The definitions for each of the elements are found in the "Part 3 Attachment."]

A+	= Fully competitive. Consistently equal to the (or is the sole) ECA offering the most competitive position on this element. Levels the playing field on this element with the most competitive offer from any of the major ECAs.
A	= Generally competitive. Consistently offers terms on this element equal to the average terms of the typical major ECA. Levels the playing field on this element with the typical offer from the major ECAs.
A-/B+	= In between A and B
B	= Modestly competitive. Consistently offers terms on this element equal to the least competitive of the major ECAs. Does not quite level the playing field on this element with most of the major ECAs.
B-/C+	= In between B and C
C	= Barely competitive. Consistently offers terms on this element that are a notch below those offered by any of the major ECAs. Puts exporter at financing disadvantage on this element that may, to a certain extent, be compensated for in other elements or by exporter concessions.
C-/D+	= In between C and D
D	= Uncompetitive. Consistently offers terms on this element that are far below those offered by other major ECAs. Puts exporter at financing disadvantage on this element so significant that it is difficult to compensate for and may be enough to lose a deal.
F	= Does not provide program or element

CORE BUSINESS POLICIES AND PRACTICES

Ex-Im Bank's Cover Policy		**Interest Rate Provided by Ex-Im Bank**	
Scope of country risk		Loans (CIRR)	
Depth of non-sovereign risk		Insurance cover	
Breadth of availibity (e.g., restrictions)		Guarantee cover	

Ex-Im Bank's Risk Premia on		**Ex-Im Bank's Co-financing**	
Sovereign		# and utility of bilateral agreements	
Non-sovereign		Flexibility in one-off deals	

EIB Form 00-02

OMB #3048-0004

PART 3 (Continued)

Do you have any comments on Ex-Im Bank's cover policy, interest rates, risk premia or co-financing as they compare to those offered by other ECAs? For example, what core business policies and practices, if changed, would impact your competitiveness? Please be as specific as possible.

MAJOR PROGRAMS AND PERFORMANCE

Ex-Im Bank's Medium-Term Program

Pricing	
% of cover	
Risk capacity	

Ex-Im Bank's Long-Term Program

Pricing	
% of cover	
Risk capacity	

Ex-Im Bank's Large Aircraft Program

Interest rate	
% of cover	
Risk capacity	

Ex-Im Bank's Project Finance

Core program features	
Repayment flexibilities	

Ex-Im Bank's Foreign Currency Guarantee

Availability of hard currency cover	
Availability of local currency cover	
Pricing	

Ex-Im Bank's Support for Service Exports

Availability	
Repayment terms	

Do you have any comments on Ex-Im Bank's programs for medium- and long-term financing, large aircraft, project finance, or foreign currency guarantees as compared to those of other ECAs? Do you have any comments on the support Ex-Im Bank offers for services exports as compared to that offered by other ECAs? What programs or performance, if changed, would impact your competitiveness? Please be as specific as possible.

OMB #3048-0004

PART 3 (Continued)

Using the guide below, please indicate the competitive impact of the following economic philosophies and public policies on Ex-Im Bank's support.

+	Positive	Philosophy, policy or program has a positive impact on Ex-Im Bank's competitiveness (moves Ex-Im Bank's competitiveness grade up one notch)
*	Neutral	Philosophy, policy or program has a neutral impact on Ex-Im Bank's competitiveness (no impact on Ex-Im Bank's competitiveness grade)
-	Negative	Philosophy, policy or program has a negative impact on Ex-Im Bank's competitiveness (moves Ex-Im Bank's competitiveness grade down one notch)

ECONOMIC PHILOSOPHY

Tied aid [ ] Market windows [ ]

Do you have any comments on Ex-Im Bank's competitiveness with regard to tied aid or market windows? For example, have you seen competition supported by market windows or tied aid financing? Please be as specific as possible. You may also provide case specific data in Part 4.

[ ]

OMB #3048-0004

PART 3 (Continued)

PUBLIC POLICIES

Economic impact		Foreign content		Local costs	
PR 17/Shipping		Environment			

Do you have any comments on Ex-Im Bank's policies as they compare with other ECAs concerning economic impact, foreign content, local costs, shipping or the environment? Where other ECAs do not have a comparable public policy, such as economic impact and shipping, do you have comments on the impact of these public policies to Ex-Im Bank's competitiveness? For example, what public policies, if changed, would impact your competitiveness? Please be as specific as possible.

COMPETITIVENESS WEIGHTING

Now that you have graded Ex-Im Bank in several areas, please weight the overall importance of each of the four broad categories listed above to Ex-Im Bank's overall competitiveness. Please ensure that the sum of your weights equals 100%.

Core Business Policies and Practices	[0 – 100%)]
Major Programs and Performance	[0 – 100%]
Economic Philosophy	[0 – 100%]
Public Policies	[0 – 100%]

[Note: The online survey will ensure that the sum of the four percentage weightings equals 100%.]

OMB #3048-0004

PART 4 – EX-IM BANK PROJECTS

This template is provided as an opportunity for you to flesh out some of the grades that you gave in Part 3 by detailing any adverse impacts of Ex-Im Bank program features in specific transactions.

Ex.	Cost/Policy/ Program	ECA	Market	Project Description	Describe the competition you faced and the effect that it had on your business (eg forced to change sourcing; lost jobs; lower exports). If possible, please quantify.
	Cover	EDC	Iran	Power Plant	As a result of Ex-Im Bank's lack of cover for Iran, we were forced to source from outside the U.S. This resulted in a loss of over $100 million in U.S. export sales.
1					
2					
3					
4					
5					

EIB Form 00-02

OMB #3048-0004

PART 5 – GENERAL COMMENTS

This space is provided for you to express your views on the general competitive environment, trends of specific competitors, etc. You may also use this space to comment on aspects of Ex-Im Bank programs, particularly those not addressed in the above questions.

EIB Form 00-02

[FR Doc. 04–1178 Filed 1–20–04; 8:45 am]
BILLING CODE 6690–01–C

EXPORT-IMPORT BANK OF THE UNITED STATES

Notice of Open Special Meeting of the Sub-Saharan Africa Advisory Committee (SAAC) of the Export-Import Bank of the United States (Export-Import Bank)

SUMMARY: The Sub-Saharan Africa Advisory Committee was established by Pub. L. 105–121, November 26, 1997, to advise the Board of Directors on the development and implementation of policies and programs designed to support the expansion of the Bank's financial commitments in Sub-Saharan Africa under the loan, guarantee and insurance programs of the Bank. Further, the committee shall make recommendations on how the Bank can facilitate greater support by U.S. commercial banks for trade with Sub-Saharan Africa.

Time and Place: Wednesday, February 11, 2004 at 9:30 a.m. to 12:30 p.m. The meeting will be held at the Export-Import Bank in Room 1143, 811 Vermont Avenue, NW., Washington, DC 20571.

Agenda: This meeting will focus on reviewing the year-end recommendations made by the Advisory Committee as to the continuing efforts to identify and facilitate U.S.-African trade included in the FY 2003 report to Congress due at the end of this calendar year as well as to update the Advisory Committee on business development since the September committee meeting.

Public Participation: The meeting will be open to public participation, and the last 10 minutes will be set aside for oral questions or comments. Members of the public may also file written statement(s) before or after the meeting. If any person wishes auxiliary aids (such as a sign language interpreter) or other special accommodations, please contact, prior to February 11, 2004, Barbara Ransom, Room 1241, 811 Vermont Avenue, NW., Washington, DC 20571, Voice: (202) 556–3525 or TDD (202) 565–3377.

FOR FURTHER INFORMATION CONTACT: Barbara Ransom, Room 1241, 811 Vermont Avenue, NW., Washington, DC 20571, (202) 565–3525.

Peter Saba,

General Counsel.

[FR Doc. 04–1177 Filed 1–20–04; 8:45 am]

BILLING CODE 6690–01–M

FEDERAL ACCOUNTING STANDARDS ADVISORY BOARD

Notice of Public Hearing

Board Action: Pursuant to 31 U.S.C. 3511(d), the Federal Advisory Committee Act (Pub. L. No. 92–463), as amended, and the FASAB Rules of Procedure, as amended in October, 1999, notice is hereby given that the Federal Accounting Standards Advisory Board (FASAB) will hold public hearing in conjunction with its March 3–4, 2004 Board Meeting to hear testimony about comments on two recently published exposure drafts (ED)—(1). *Heritage Assets and Stewardship Land: Reclassification from Required Supplementary Stewardship Information* and (2.) *Identifying and Reporting Earmarked funds.* The public hearing will also permit the Board to ask questions about information and points of view submitted by respondents. Those interested in testifying should contact Melissa Loughan, Assistant Director, no later than one week prior to the hearing. Ms. Loughan can be reached at 202–512–5976 or via e-mail at *loughanm@fasab.gov.* Also, they should at the same time provide a short biography and written copies of their testimony. The EDs are available on the FASAB Web site *http://www.fasab.gov* under Exposure Drafts.

Any interested person may attend the meetings as an observer. Board discussion and reviews are open to the public. GAO Building security requires advance notice of your attendance. Please notify FASAB of your planned attendance by calling 202–512–7350 at least one day prior to the respective meeting.

FOR FURTHER INFORMATION CONTACT: Wendy M. Comes, Executive Director, 441 G St., NW., Mail Stop 6K17V, Washington, DC 20548, or call (202) 512–7350.

Authority: Federal Advisory Committee Act. Pub. L. 92–463.

Dated: January 14, 2004.

Wendy M. Comes,

Executive Director.

[FR Doc. 04–1153 Filed 1–20–04; 8:45 am]

BILLING CODE 1610–01–M

FEDERAL COMMUNICATIONS COMMISSION

Notice of Public Information Collection(s) Being Reviewed by the Federal Communications Commission, Comments Requested

January 7, 2004.

SUMMARY: The Federal Communications Commission, as part of its continuing effort to reduce paperwork burden invites the general public and other Federal agencies to take this opportunity to comment on the following information collection(s), as required by the Paperwork Reduction Act (PRA) of 1995, Public Law 104–13. An agency may not conduct or sponsor a collection of information unless it displays a currently valid control number. No person shall be subject to any penalty for failing to comply with a collection of information subject to the Paperwork Reduction Act that does not display a valid control number. Comments are requested concerning (a) whether the proposed collection of information is necessary for the proper performance of the functions of the Commission, including whether the information shall have practical utility; (b) the accuracy of the Commission's burden estimate; (c) ways to enhance the quality, utility, and clarity of the information collected; and (d) ways to minimize the burden of the collection of information on the respondents, including the use of automated collection techniques or other forms of information technology.

DATES: Written Paperwork Reduction Act (PRA) comments should be submitted on or before March 22, 2004. If you anticipate that you will be submitting comments, but find it difficult to do so within the period of time allowed by this notice, you should advise the contact listed below as soon as possible.

ADDRESSES: Direct all Paperwork Reduction Act (PRA) comments to Les Smith, Federal Communications Commission, Room 1–A804, 445 12th Street, SW., Washington, DC 20554 or via the Internet to *Leslie.Smith@fcc.gov.*

FOR FURTHER INFORMATION CONTACT: For additional information or copies of the information collection(s), contact Les Smith at (202) 418–0217 or via the Internet at *Leslie.Smith@fcc.gov.*

SUPPLEMENTARY INFORMATION:

OMB Control Number: 3060–0016.

Title: Application for Authority to Construct or Make Changes in a Low Power TV, TV Translator, or TV Booster Station.

Form Number: FCC 346.

Type of Review: Extension of currently approved collection.

Respondents: Businesses or other for-profit entities; Not-for-profit institutions; and State, local or tribal government.

Number of Respondents: 2,000.

Estimated Time per Response: 7 hours.

Frequency of Response: On occasion reporting requirements; Third party disclosure.

Total Annual Burden: 14,000.

Total Annual Costs: $38,396,000.

Needs and Uses: Licensees/permittees/applicants use FCC Form 346 to apply for authority to construct or make changes in a Low Power Television, TV Translator or TV Booster broadcast station. Applicants are also subject to the third party disclosure requirements under 47 CFR Section 73.3580. Within 30 days of tendering the application, the applicant is required to publish a notice in a newspaper of general circulation when filing all applications for new or major changes in facilities—the notice is to appear at least twice a week for two consecutive weeks in a three-week period. A copy of this notice must be maintained with the application. FCC staff use the data to determine if the applicant is qualified, meets basic statutory and treaty requirements, and will not cause interference to other authorized broadcast services.

Federal Communications Commission.

Marlene H. Dortch,

Secretary.

[FR Doc. 04–1191 Filed 1–20–04; 8:45 am]

BILLING CODE 6712–01–P

FEDERAL COMMUNICATIONS COMMISSION

Notice of Public Information Collection(s) Being Reviewed by the Federal Communications Commission for Extension Under Delegated Authority

January 12, 2004.

SUMMARY: The Federal Communications Commission, as part of its continuing effort to reduce paperwork burden invites the general public and other Federal agencies to take this opportunity to comment on the following information collection(s), as required by the Paperwork Reduction Act of 1995, Public Law 104–13. An agency may not conduct or sponsor a collection of information unless it displays a currently valid control number. No person shall be subject to any penalty for failing to comply with a collection of information subject to the Paperwork Reduction Act (PRA) that does not display a valid control number. Comments are requested concerning (a) whether the proposed collection of information is necessary for the proper performance of the functions of the Commission, including whether the information shall have practical utility; (b) the accuracy of the Commission's burden estimate; (c) ways to enhance the quality, utility, and clarity of the information collected; and (d) ways to minimize the burden of the collection of information on the respondents, including the use of automated collection techniques or other forms of information technology.

DATES: Persons wishing to comment on this information collection should submit comments March 22, 2004. If you anticipate that you will be submitting comments, but find it difficult to do so within the period of time allowed by this notice, you should advise the contact listed below as soon as possible.

ADDRESSES: Direct all Paperwork Reduction Act (PRA) comments to Judith B. Herman, Federal Communications Commission, 445 12th Street, SW., Room 1–C804, Washington, DC 20554 or via the Internet to *Judith-B.Herman@fcc.gov.*

FOR FURTHER INFORMATION CONTACT: For additional information or copies of the information collections contact Judith B. Herman at 202–418–0214 or via the internet at *Judith-B.Herman@fcc.gov.*

SUPPLEMENTARY INFORMATION:

OMB Control No.: 3060–0295.

Title: Supplemental Information to be Furnished by Applicants for Facilities Under Subpart 47 CFR Section 90.607(b)(1) and (c)(1).

Form No.: N/A.

Type of Review: Extension of a currently approved collection.

Respondents: Business or other for profit, not-for-profit institutions, and state, local, or tribal government.

Number of Respondents: 2,208.

Estimated Time Per Response: .25 hours.

Frequency of Response: On occasion reporting requirement.

Total Annual Burden: 507 hours.

Annual Cost Burden: N/A.

Needs and Uses: These rule sections require certain applicants that request 800 MHz facilities to furnish a list of any other licensed facilities that they hold within 40 miles of the base station for which they have applied. The information is used by licensing personnel to equitably distribute limited spectrum. The Commission is submitting this information collection to the Office of Management and Budget as an extension (no change).

OMB Control No.: 3060–0625.

Title: Amendment of the Commission's Rules to Establish New Personal Communications Services under Part 24.

Form No.: N/A.

Type of Review: Extension of a currently approved collection.

Respondents: Individuals or households, business or other for-profit entities, not-for-profit institutions, and state, local or tribal government.

Number of Respondents: 1,500.1

Estimated Time Per Response: .5–3 hours.

Frequency of Response: On occasion reporting requirement and recordkeeping requirement.

Total Annual Burden: 1,688 hours.

Annual Cost Burden: $675,000.

Needs and Uses: The reporting and recordkeeping requirements will be used to determine whether the proposed partitionee or disaggregate is an entity qualified to obtain a partitioned license or disaggregated spectrum. Without this information, the Commission would not be able to carry out its statutory responsibilities.

Federal Communications Commission.

Marlene H. Dortch,

Secretary.

[FR Doc. 04–1193 Filed 1–20–04; 8:45 am]

BILLING CODE 6712–01–P

FEDERAL COMMUNICATIONS COMMISSION

Notice of Public Information Collection(s) Being Reviewed by the Federal Communications Commission, Comments Requested

January 12, 2004.

SUMMARY: The Federal Communications Commission, as part of its continuing effort to reduce paperwork burden invites the general public and other Federal agencies to take this opportunity to comment on the following information collection(s), as required by the Paperwork Reduction Act (PRA) of 1995, Public Law 104–13. An agency may not conduct or sponsor a collection of information unless it displays a currently valid control number. No person shall be subject to any penalty for failing to comply with a collection of information subject to the Paperwork Reduction Act that does not display a valid control number. Comments are requested concerning (a) whether the proposed collection of information is necessary for the proper performance of the functions of the Commission, including whether the information shall have practical utility; (b) the accuracy of the Commission's

burden estimate; (c) ways to enhance the quality, utility, and clarity of the information collected; and (d) ways to minimize the burden of the collection of information on the respondents, including the use of automated collection techniques or other forms of information technology.

DATES: Written Paperwork Reduction Act (PRA) comments should be submitted on or before March 22, 2004. If you anticipate that you will be submitting comments, but find it difficult to do so within the period of time allowed by this notice, you should advise the contact listed below as soon as possible.

ADDRESSES: Direct all Paperwork Reduction Act (PRA) comments to Judith B. Herman, Federal Communications Commission, Room 1–C804, 445 12th Street, SW., Washington, DC 20554 or via the Internet to *Judith-B.Herman@fcc.gov*.

FOR FURTHER INFORMATION CONTACT: For additional information or copies of the information collection(s), contact Judith B. Herman at 202–418–0214 or via the Internet at *Judith-B.Herman@fcc.gov*.

SUPPLEMENTARY INFORMATION:

OMB Control No.: 3060–1039.

Title: Nationwide Programmatic Agreement Regarding the Section 106 National Historic Preservation Act — Review Process, WT Docket No. 03–128.

Form Nos.: FCC Forms 620 and 621.

Type of Review: Revision of a currently approved collection.

Respondents: Individuals or households, business or other for-profit, not-for-profit institutions and state, local or tribal government.

Number of Respondents: 12,000 respondents; 7,800 responses.

Estimated Time Per Response: .5–10 hours.

Frequency of Response: On occasion reporting requirement, third party disclosure requirement, and recordkeeping requirement.

Total Annual Burden: 73,800 hours.

Total Annual Cost: $10,017,000.

Needs and Uses: This data is used by the FCC staff, State Historic Preservation Officers (SHPO), Tribal Historic Preservation Officers (THPO) and the Advisory Council of Historic Preservation (ACHP) to take such action as may be necessary to ascertain whether a proposed action may affect historic properties that are listed or eligible for listing the National Register as directed by Section 106 of the NHPA and the Commission's rules.

The Commission is revising its FCC Forms 620 and 621 to address comments received from the public in response to the Notice of Proposed Rulemaking. See Nationwide Programmatic Agreement Regarding the Section 106 National Historic Preservation Act Review Process, WT Docket No. 03–128, Notice of Proposed Rulemaking, 18 FCC Rcd 11,664 (2003) (''Notice''); Errata, 18 FCC Rcd 12,854 (2003). In general, the Commission is in the process of revising the forms in an effort to simplify them, make them more user-friendly, and provide the information necessary for the SHPO and THPO to base their decisions.

Federal Communications Commission.

Marlene H. Dortch,

Secretary.

[FR Doc. 04–1194 Filed 1–20–04; 8:45 am]

BILLING CODE 6712–01–P

FEDERAL RESERVE SYSTEM

Change in Bank Control Notices; Acquisition of Shares of Bank or Bank Holding Companies

The notificants listed below have applied under the Change in Bank Control Act (12 U.S.C. 1817(j)) and § 225.41 of the Board's Regulation Y (12 CFR 225.41) to acquire a bank or bank holding company. The factors that are considered in acting on the notices are set forth in paragraph 7 of the Act (12 U.S.C. 1817(j)(7)).

The notices are available for immediate inspection at the Federal Reserve Bank indicated. The notices also will be available for inspection at the office of the Board of Governors. Interested persons may express their views in writing to the Reserve Bank indicated for that notice or to the offices of the Board of Governors. Comments must be received not later than February 4, 2004.

A. Federal Reserve Bank of Philadelphia (Michael E. Collins, Senior Vice President) 100 North 6th Street, Philadelphia, Pennsylvania 19105-1521:

1. Nicholas Anthony Randazzo, Clifton Heights, Pennsylvania; Linda Jane Tabas Stempel, Haverford, Pennsylvania; and Robert Royal Tabas, Bryn Mawr, Pennsylvania, as trustees of the Daniel M. Tabas Trust; to retain voting shares of The Royal Bancshares of Pennsylvania, Inc., Narberth, Pennsylvania, and thereby indirectly retain voting shares of Royal Bank of Pennsylvania, Narberth, Pennsylvania.

B. Federal Reserve Bank of Kansas City (James Hunter, Assistant Vice President) 925 Grand Avenue, Kansas City, Missouri 64198-0001:

1. Clair Wells, Tahlequah, Oklahoma, as trustee of the Louise Squyres Trust; to acquire voting shares of Maxlou Bancshares, Inc., Tahlequah, Oklahoma, and thereby indirectly acquire voting shares of First State Bank, Tahlequah, Oklahoma.

Board of Governors of the Federal Reserve System, January 14, 2004.

Robert deV. Frierson,

Deputy Secretary of the Board.

[FR Doc. 04–1200 Filed 1–20–04; 8:45 am]

BILLING CODE 6210–01–S

FEDERAL RESERVE SYSTEM

Formations of, Acquisitions by, and Mergers of Bank Holding Companies

The companies listed in this notice have applied to the Board for approval, pursuant to the Bank Holding Company Act of 1956 (12 U.S.C. 1841 *et seq.*) (BHC Act), Regulation Y (12 CFR Part 225), and all other applicable statutes and regulations to become a bank holding company and/or to acquire the assets or the ownership of, control of, or the power to vote shares of a bank or bank holding company and all of the banks and nonbanking companies owned by the bank holding company, including the companies listed below.

The applications listed below, as well as other related filings required by the Board, are available for immediate inspection at the Federal Reserve Bank indicated. The application also will be available for inspection at the offices of the Board of Governors. Interested persons may express their views in writing on the standards enumerated in the BHC Act (12 U.S.C. 1842(c)). If the proposal also involves the acquisition of a nonbanking company, the review also includes whether the acquisition of the nonbanking company complies with the standards in section 4 of the BHC Act (12 U.S.C. 1843). Unless otherwise noted, nonbanking activities will be conducted throughout the United States. Additional information on all bank holding companies may be obtained from the National Information Center website at *www.ffiec.gov/nic/*.

Unless otherwise noted, comments regarding each of these applications must be received at the Reserve Bank indicated or the offices of the Board of Governors not later than February 16, 2004.

A. Federal Reserve Bank of Atlanta (Sue Costello, Vice President) 1000 Peachtree Street, N.E., Atlanta, Georgia 30303:

1. Algiers Bancorp, Inc., Baton Rouge, Louisiana; to become a bank holding company by acquiring 100 percent of the voting shares of Algiers Bank and Trust Company, Tennytown, Louisiana, upon its conversion from a savings

association to a bank. After the conversion, it will operate as Statewide Bank, Terrytown, Louisiana.

B. Federal Reserve Bank of Chicago (Patrick Wilder, Managing Examiner) 230 South LaSalle Street, Chicago, Illinois 60690-1414:

1. Maximum Bancshares, Inc., Huxley, Iowa; to become a bank holding company by acquiring 100 percent of the voting shares of First State Bank, Huxley, Iowa.

Board of Governors of the Federal Reserve System, January 14, 2004.

Robert deV. Frierson,

Deputy Secretary of the Board.

[FR Doc. 04–1199 Filed 1–20–04; 8:45 am]

BILLING CODE 6210–01–S

FEDERAL RESERVE SYSTEM

Consumer Advisory Council

On January 9, 2004, the Federal Reserve Board named nine new members to its Consumer Advisory Council for three-year terms and designated a new Chair and Vice Chair of the Council for 2004.

The Council advises the Board on the exercise of its responsibilities under the Consumer Credit Protection Act and on other matters in the area of consumer financial services. The Council meets three times a year in Washington, DC.

Agnes Bundy Scanlan was designated Chair; her term runs through December 2004. Ms. Scanlan is Managing Director and Chief Compliance Officer for FleetBoston Financial.

Mark Pinsky was designated Vice Chair; his term on the Council ends in December 2005. Mr. Pinsky is President and Chief Executive Officer for the National Community Capital Association.

The nine new members are:

Dennis L. Algiere Westerly, Rhode Island

Mr. Algiere is Senior Vice President of Compliance and Community Affairs and the Community Reinvestment Officer for The Washington Trust Company. He is responsible for the bank's compliance, community affairs, community reinvestment, and Bank Secrecy Act programs.

Sheila Canavan, Berkeley, California

Ms. Canavan is an attorney with a law practice that focuses on consumer litigation. Her litigation experience has involved state and federal consumer regulation, elder abuse, fraud, and unfair and unlawful business practices; and she has special expertise in matters relating to subprime lending and securitization of home mortgage products. Ms. Canavan represents consumers, often low-income consumers, on credit transaction issues.

Anne Diedrick, New York, New York

Ms. Diedrick is a Senior Vice President for JP Morgan Chase. She is an executive team member of the JPMorgan Chase Community Development Group; the senior officer in charge of Community Reinvestment Act compliance at JPMorgan Chase Bank, Chase Manhattan Bank, USA, N.A. and J.P. Morgan Trust Company, N.A.; and the senior manager in charge of the JPMorgan Chase Corporate Fair Lending Unit. She is also responsible for the Office of Strategic Alliances, which works with not-for-profit community development organizations.

Hattie B. Dorsey, Atlanta, Georgia

Ms. Dorsey is the President and Chief Executive Officer of the Atlanta Neighborhood Development Partnership, Inc., a not-for-profit corporation that promotes community revitalization in Atlanta's neighborhoods. Her experience is in single- and multi-family housing, community and economic development, regional equity, and public policy.

Bruce B. Morgan, Roeland Park, Kansas

Mr. Morgan is Chairman, President, Chief Executive Officer, and Director of Valley State Bank. He is actively involved in bank regulation, payments systems, and developing technologies that affect bank delivery of products and services. Mr. Morgan serves on the Customer Advisory Committee of the Federal Reserve Bank of Kansas City and on the Payment and Technology Committee of the Independent Community Bankers of America. He is a former member and past Chairman of the Kansas State Banking Board.

Mary Jane Seebach, Newbury Park, California

Ms. Seebach is Executive Vice President and Chief Compliance Officer for Countrywide Financial Corporation. She oversees legal and regulatory compliance programs throughout the enterprise. Previously, Ms. Seebach worked as regulatory counsel advising on state and federal consumer credit laws for Countrywide Home Loans, The Money Store, and North American Mortgage Company, and as a senior attorney for the Federal Reserve Board.

Paul J. Springman, Atlanta, Georgia

Mr. Springman is Group Executive, Predictive Sciences, for Equifax. He has responsibility for providing modeling, analytical services, decisioning systems and applications processing for clients. He has been involved in launching a new business line, ''Consumer Direct,'' to provide credit information, account monitoring alerts, and scoring analysis services to consumers.

Forrest F. Stanley, Cleveland, Ohio

Mr. Stanley is Senior Vice President and Associate General Counsel for KeyBank. He has responsibility for all legal matters affecting retail banking including mortgage, home equity, credit and debit cards, privacy, the Community Reinvestment Act, e-commerce, and the USA Patriot Act. Mr. Stanley has also been director of two KeyBank subsidiaries, Champion Mortgage Company and Key Bank USA. He currently serves as Chairman of the bank's Fair Lending Executive Committee.

Lori R. Swanson, St. Paul, Minnesota

Ms. Swanson is Solicitor General for the Office of the Minnesota Attorney General. She is responsible for civil litigation and oversees several divisions including Consumer Enforcement, Commerce, and Consumer Services. She negotiated a first-of-its-kind settlement with a national bank in a lawsuit alleging violations of state consumer protection laws and the Fair Credit Reporting Act based on disclosure of personal financial information.

Council members whose terms continue through 2004 are:

Janie Barrera, President and Chief Executive Officer, ACCION Texas, San Antonio, Texas.

Kenneth P. Bordelon, Chief Executive Officer, E Federal Credit Union, Baton Rouge, Louisiana.

Robin Coffey, Vice President, Harris Trust and Savings Bank, Chicago, Illinois.

Thomas FitzGibbon, Senior Vice President, MB Financial Bank, N.A., Chicago, Illinois.

Larry Hawkins, President and Chief Executive Officer, Unity National Bank, Houston, Texas.

Ruhi Maker, Senior Attorney, Public Interest, Law Office of Rochester, Rochester, New York.

Patricia McCoy, Professor of Law, University of Connecticut School of Law, Hartford, Connecticut.

Elsie Meeks, Executive Director, First Nations Oweesta Corporation, Kyle, South Dakota.

Debra S. Reyes, President, Neighborhood Lending Partners, Inc., Tampa, Florida.

Benson Roberts, Vice President for Policy, Local Initiatives Support Corporation, Washington, DC.

Hubert Van Tol, Co-Director, Fairness in Rural Lending, Sparta, Wisconsin.

Council members whose terms continue through 2005 are:

Susan Bredehoft, Senior Vice President/ Compliance Risk Management, Commerce Bank, N.A., Cherry Hill, New Jersey.

Dan Dixon, Group Senior Vice President, World Savings Bank, FSB, Washington, DC.

James Garner, Senior Vice President and General Counsel, North American Consumer Finance, Citigroup, Baltimore, Maryland.

R. Charles Gatson, Vice President, Midtown Community Development Corporation, Kansas City, Missouri.

W. James King, President and Chief Executive Officer, Community Redevelopment Group, Cincinnati, Ohio.

Benjamin Robinson, III, Senior Vice President, Strategy Management Executive, Bank of America, Charlotte, North Carolina.

Diane Thompson, Supervising Attorney, Land of Lincoln Legal Assistance Foundation, Inc., East St. Louis, Illinois.

Clint Walker, General Counsel/Chief Administrative Officer, Juniper Bank, Wilmington, Delaware.

Board of Governors of the Federal Reserve System, January 14, 2004.

Jennifer J. Johnson,

Secretary of the Board.

[FR Doc. 04–1224 Filed 1–20–04; 8:45 am]

BILLING CODE 6210–01–P

FEDERAL RESERVE SYSTEM

Sunshine Act Meeting

AGENCY HOLDING THE MEETING: Board of Governors of the Federal Reserve System.

TIME AND DATE: 12:00 p.m., Monday, January 26, 2004.

PLACE: Marriner S. Eccles Federal Reserve Board Building, 20th and C Streets, N.W., Washington, D.C. 20551.

STATUS: Closed.

MATTERS TO BE CONSIDERED:

1. Personnel actions (appointments, promotions, assignments, reassignments, and salary actions) involving individual Federal Reserve System employees.

2. Any items carried forward from a previously announced meeting.

FOR FURTHER INFORMATION CONTACT: Michelle A. Smith, Director, Office of Board Members; 202–452–2955.

SUPPLEMENTARY INFORMATION: You may call 202–452–3206 beginning at approximately 5 p.m. two business days before the meeting for a recorded announcement of bank and bank holding company applications scheduled for the meeting; or you may contact the Board's Web site at http://www.federalreserve.gov for an electronic announcement that not only lists applications, but also indicates procedural and other information about the meeting.

Board of Governors of the Federal Reserve System, January 16, 2004.

Robert deV. Frierson,

Deputy Secretary of the Board.

[FR Doc. 04–1339 Filed 1–16–04; 1:00 pm]

BILLING CODE 6210–01–S

DEPARTMENT OF HEALTH AND HUMAN SERVICES

Centers for Disease Control and Prevention

[Program Announcement Open Season 02060–FY04]

National Cancer Prevention and Control Program; Notice of Availability of Open Season Funds

A. Purpose

The Centers for Disease Control and Prevention (CDC) announces the availability of fiscal year (FY) 2004 funds for an Open Season for the National Cancer Prevention and Control Program (NCPCP) cooperative agreement program previously announced under Program Announcement 02060 (Henceforth referred to as ''PA 02060''). This program addresses the ''Healthy People 2010'' focus area(s) related to cancer.

PA02060 was published in the **Federal Register** on April 23, 2002, Volume 67, Number 78, pages 19932–19950. Amendment 1 was published May 23, 2002, and Amendment 2 was published January 2, 2003. Applicants may access the amended version of PA 02060, along with this Open Season announcement, on the CDC Web site, Internet address: *http://www.cdc.gov.* Click on ''Funding,'' then ''Grants and Cooperative Agreements.''

Sections A.–F. of original PA 02060 are superceded by the Sections A.–F. published in this announcement.

The NCPCP will assist States/District of Columbia/Tribes/Territories in developing, implementing, maintaining, enhancing, integrating, and evaluating a cancer program inclusive of cancer surveillance, prevention and early detection programs, and which focuses on eliminating health disparities. The purpose of each of the three programmatic components within the NCPCP follows.

A.1. National Comprehensive Cancer Control Programs (NCCCP)

The NCCCP component supports the planning and implementation of comprehensive cancer control activities. CDC defines comprehensive cancer control as an integrated and coordinated approach to reduce the incidence, morbidity and mortality of cancer through prevention, early detection, treatment, rehabilitation, and palliation.

A.2. National Breast and Cervical Cancer Early Detection Program (NBCCEDP)

The NBCCEDP component supports the development of systems to assure breast and cervical cancer screening for low income, underserved, and uninsured women with special emphasis on reaching those who are geographically or culturally isolated, older, or members of racial/ethnic minorities. Components of the NBCCEDP include surveillance, partnership development, screening, referral and follow-up, quality assurance, public and provider education, and evaluation. These components are carried out at the local, State and national levels through collaborative partnerships with State health agencies, community-based organizations, tribal governments, universities, a variety of medical care providers and related agencies and institutions, and the business and voluntary sectors. These partners work together to develop, implement and evaluate strategies to promote breast and cervical cancer prevention and early detection, to increase access to related services and to improve the quality and timeliness of the services.

A.3. National Program of Cancer Registries (NPCR)

The NPCR component supports efforts to establish population-based cancer registries where they do not exist and to improve existing cancer registries.

PA 02060 and applicable amendments, contain information that is specific to the three individual components. Section G ''Specific Guidance for NCCCP'' addresses the National Comprehensive Cancer Control Program; Section H ''Specific Guidance for NCCEDP'' addresses the National Breast and Cervical Cancer Early Detection Program; and Section I ''Specific Guidance for NPCR'' addresses the National Program of Cancer Registries. These component sections include specific guidance regarding:

- Eligibility
- Program Requirements
- Content
- Other Requirements
- Evaluation Criteria

Please refer to these specific component sections in PA 02060, and amendments for information.

Special Guidelines for Technical Assistance:

Conference Call:

Technical assistance will be available for potential applicants on two conference calls.

The first call will be for States/Tribes/Territories that are in atlantic, eastern, or central time zones, and will be held on Wednesday, January 28, 2004 from 9 a.m. to 11 a.m. (eastern time). Potential applicants are requested to call in using only one telephone line. The conference can be accessed by calling 1–888–425–9158 and entering access code 9209561.

The second call will be for States/Tribes/Territories that are in mountain or pacific time zones, and will be held on Wednesday, January 28, 2004 from 3:30 p.m. to 5:30 p.m. (eastern time). Potential applicants are requested to call in using only one telephone line. The conference can be accessed by calling 1–888–576–9873 and entering access code TTEP or 8837.

The purpose of the conference call is to help potential applicants to:

1. Understand the process for the Open Season Announcement for PA 02060 for the National Cancer Prevention and Control Program;
2. Understand the scope and intent of PA 02060 for the National Cancer Prevention and Control Program;
3. Be familiar with the Public Health Services funding policies and application and review procedures.

Participation in this conference call is not mandatory. At the time of the call, if you have problems accessing the conference call, please call 404–639–7550.

B. Eligible Applicants

Applicants may apply for any or all of the components within this Open Season announcement for which they are eligible.

B.1. Eligible for NCCCP

Potential applicants that are eligible for components of NCCCP are the health departments of States or their bona fide agents, the Commonwealth of Puerto Rico, the Virgin Islands, the Commonwealth of the Northern Mariana Islands, American Samoa, Guam, the Federated States of Micronesia, the Republic of the Marshall Islands, the Republic of Palau, and Federally recognized Indian Tribal governments and Tribal organizations, urban Indian organizations and inter-tribal consortia (hereafter referred to as Tribes) whose primary purpose is to improve American Indian/Alaska Native health and which represent the Native population in their catchment area, that are not currently funded for NCCCP under PA 02060.

B.2. Eligible for NBCCEDP

Potential applicants that are eligible for NBCCEDP are the Virgin Islands, the Commonwealth of the Northern Mariana Islands, the Federated States of Micronesia, the Republic of the Marshall Islands, and Federally recognized Indian Tribal governments and Tribal organizations, urban Indian organizations and inter-tribal consortia (hereafter referred to as Tribes) whose primary purpose is to improve American Indian/Alaska Native health and which represent the Native population in their catchment area, that are not currently funded for NBCCEDP under PA 02060.

B.3. Eligible for NPCR

Potential applicants that are eligible for components of NPCR are the health departments of States or their bona fide agents, the Commonwealth of Puerto Rico, the Virgin Islands, the Commonwealth of the Northern Mariana Islands, American Samoa, Guam, the Federated States of Micronesia, the Republic of the Marshall Islands, the Republic of Palau, and academic or nonprofit organizations designated by a State to operate the State's cancer registry, that are not currently funded under PA 02060.

Note: Title 2 of the United States Code section 1611 states that an organization described in section 501(c)(4) of the Internal Revenue Code that engages in lobbying activities is not eligible to receive Federal funds constituting an award, grant or loan.

C. Availability of Funds

Pending availability of FY 2004 funds, approximately $3,500,000 is available in FY 2004 to fund new programs under the Open Season for PA 02060–FY04.

Awards under PA 02060 were made for a Project Period of September 30, 2002 through June 29, 2007. The first funding period was for the period September 30, 2002 through June 29, 2003. The second funding period was for the period June 30, 2003 through June 29, 2004. Awards under this Open Season announcement will be for the Period of June 30, 2004 through June 29, 2007, with funding for the period June 30, 2004 through June 29, 2005. Future budget periods will be 12-month periods, and will begin on June 30 of every year and run through June 29 of each following year. These budget periods will occur until the expiration of the project period for PA 02060, which is June 29, 2007.

In accordance with G.2.d. of PA 02060, and amendments, the following organizations are identified as applicants previously Approved but Unfunded (ABU) and eligible for funding preference. NBCCEDP applicants, including: Choctaw Nation of Oklahoma, Virgin Islands, and Northern Mariana Islands. Applicants listed above need not submit a new application to be considered for funding. Programs who previously applied and are not on this list, but are interested in being funded, must reapply.

All new applications will be reviewed through an Objective Review process.

C.1. Component Funding

NCCCP $500,000
NBCCEDP $1,000,000
NPCR $500,000

NCCCP—Additional Optional Funding available for recipients of NCCCP Implementation Programs as follows:

- Colorectal cancer activities $500,000
- Ovarian cancer activities $500,000
- Prostate cancer activities $500,000

C.2. Requested Budget Information

Applicants should submit separate budgets for each component (as well as separate budgets if applying for the Additional Optional Funding under NCCCP) in response to this Open Season announcement. Each detailed budget and narrative justification should support the activities for the funding period specified in this Program Announcement for FY 2004 support.

Applications should follow the guidance provided under each program component in PA 02060 and applicable amendments, with respect to the development and submission of an itemized budget and justification.

C.3. Use of Funds

For specific ''Use of Funds'' information, refer to Sections G, H, and I of PA 02060 and amendments.

Cooperative agreement funds may be used to support personnel and to purchase equipment, supplies, and services directly related to project activities and consistent with the scope of the cooperative agreement.

Funds provided under this program announcement may not be used to:

- Conduct research projects. Guidance regarding CDC's definition of ''research'' should be reviewed at *http://www.cdc.gov/od/ads/opspoll1.htm.*

• Supplant State or local funds, to provide inpatient care or treatment, or to support the construction or renovation of facilities.

Applicants are encouraged to identify and leverage mutually beneficial opportunities to interact and integrate with other State health department programs that address related chronic diseases or risk factors. This may include cost sharing to support a shared position such as a Chronic Disease Epidemiologist, Health Communication Specialist, Program Evaluator, or Policy Analyst to work on relevant activities across units/departments within the State health department. Such activities may include, but are not limited to joint planning, joint funding of complementary activities, public health education, collaborative development and implementation of environmental, policy, systems, or community interventions and other cost sharing activities.

C.4. Recipient Financial Participation

For specific ''Recipient Financial Participation'' information, please refer to Sections G, H, and I of PA 02060 and amendments.

C.5. Direct Assistance

For specific ''Direct Assistance'' information, please refer to Sections G, H, and I of PA 02060 and amendments.

C.6. Funding Preferences

In accordance with the ''Funding Preference'' section of the amended PA 02060, funding preference may be given to applicants from previous year's applications who were considered Approved but Unfunded (ABU). Criteria for determining which programs would be eligible for this consideration were based on an acceptable score from the previous (fiscal year 2003) objective review. Funding preference will be given to NBCCEDP applicants, including: Choctaw Nation of Oklahoma, Virgin Islands, and Northern Mariana Islands. Applicants listed above need not submit a new application to be considered for funding. Programs who previously applied and are not on this list, but are interested in being funded, must reapply.

For specific ''Funding Preference'' information, please refer to Sections G, H, and I of PA 02060 and amendments.

C.7. Funding Consideration

For specific ''Funding Consideration'' information, please refer to Sections G, H, and I of PA 02060 and amendments.

D. Content

D.1. Letter of Intent

One Letter of Intent (LOI) is requested from each applicant applying for any component(s) of this program. The narrative should be no more than one single-spaced page, printed on one side, with one-inch margins, and unreduced font. Your LOI will not be evaluated, but will be used to assist CDC in planning for the objective review for this program and should include the announcement number, the specific component(s) and parts of the component, if applicable, for which funds are being applied, and the name of the principal investigator.

D.2. Application Development

Please refer to Sections G, H, and I of PA 02060 and amendments to use the information in the Program Requirements, Other Requirements, and Evaluation Criteria sections to develop the application content. Your application will be evaluated using the criteria listed, so it is important to follow them in laying out your application.

Applications should follow the guidance below with respect to page limitations for each component. All applications should be printed on one side, with one-inch margins, using unreduced font. All materials must be provided in an unbound, one-sided, 8½ x 11″ print format, suitable for photocopying (*i.e.*, no audiovisual materials, posters, tapes, etc.).

D.3. Page Limitations

For specific ''Page Limitations'' information, please see Sections G, H, and I of PA 02060 and amendments.

D.4. Application Outline

Applicants may apply for any or all of the components within this program announcement for which they are eligible. Please provide specific ''Application Outline'' information for each component as outlined in specific Sections G, H, and I of PA 02060 and amendments.

E. Submission and Deadline

E.1. Letter of Intent

On or before January 30, 2004, submit the LOI to the National Center for Chronic Disease Prevention and Control.

By mail:

Tanya Hicks, Program Analyst, CDC National Center for Chronic Disease Prevention and Health Promotion, 4770 Buford Hwy, NE, MS K–57, Atlanta, GA 30341–3717;

OR by courier service:

Tanya Hicks, Koger Center, 2858 Woodcock Blvd, Davidson Bldg, Room 2081, Chamblee, GA 30341;

OR by fax: 770–488–3230; or by e-mail: *Thicks@cdc.gov.*

E.2. Application

Submit the original and two copies of CDC Form 0.1246. Forms are available in the application kit and at the following Internet address: *http://www.cdc.gov/od/pgo/forminfo.htm*

On or before March 1, 2004, submit the original and two copies of the application to: Technical Information Management—PA02060FY04, Procurement and Grants Office, Centers for Disease Control and Prevention, 2920 Brandywine Road, Atlanta, GA 30341–4146.

Applications may not be submitted electronically at this time.

Please reference Program Announcement Number 02060–FY04 National Cancer Prevention and Control Program on the mailing envelope and on the application Standard Form 424, block 11. Please also make sure that block 16 on Standard Form 424 regarding Executive Order 12372 has been completed correctly.

E.3. Deadline

Applications must be received in the CDC Procurement and Grants Office by 4 p.m. Eastern time on the deadline date. If you send your application by the United States Postal Service or commercial delivery service, you must ensure that the carrier will be able to guarantee delivery of the application by the closing date and time. If CDC receives your application after closing due to: (1) carrier error, when the carrier accepted the package with a guarantee for delivery by the closing date and time, or (2) significant weather delays or natural disasters, you will be given the opportunity to submit documentation of the carriers guarantee. If the documentation verifies a carrier problem, CDC will consider the application as having been received by the deadline.

CDC will not notify you upon receipt of your application. If you have a question about the receipt of your application, first contact your courier. If you still have a question, contact the PGO–TIM staff at: 770–488–2700. Before calling, please wait two to three days after the application deadline. This will allow time for the applications to be processed and logged.

F. Evaluation Criteria

Each application will be evaluated individually will be reviewed through an Objective Review process.

For specific ''Evaluation Criteria'' information, please see Sections G, H, and I of PA 02060 and amendments.

G. Where To Obtain Additional Information

This and other CDC announcements can be found on the CDC home page Internet address—*http://www.cdc.gov.* Click on ''Funding'' then ''Grants and Cooperative Agreements.''

If you have questions after reviewing the contents of all the documents, business management technical assistance in the states may be obtained from: Annie Camacho or Glynnis Taylor, Grants Management Specialist, CDC Procurement and Grants Office, 2920 Brandywine Road, Atlanta, GA 30341–4146.

Telephone number: Annie Camacho: 770–488–2735, Glynnis Taylor: 770–488–2752.

E-mail address: Annie Camacho: *atc4@cdc.gov*, Glynnis Taylor: *gld1@cdc.gov.*

Business management technical assistance in the territories may be obtained from: Vincent Falzone, Grants Management Specialist, CDC Procurement and Grants Office, 2920 Brandywine Road, Atlanta, GA 30341–4146. Telephone number: 770–488–2763. E-mail address: *vcf6@cdc.gov.*

For program technical assistance contact:

NCCCP: Leslie S. Given, M.P.A., Public Health Advisor, NCCCP, Program Services Branch, Division of Cancer Prevention and Control, National Center for Chronic Disease Prevention and Health Promotion, Centers for Disease Control and Prevention, 4770 Buford Hwy., NE (MS K–57), Atlanta, GA 30341–3717. Telephone number: 770–488–3099. E-mail address: *llg5@cdc.gov.*

NBCCEDP: Susan True, M.Ed., Branch Chief, Program Services Branch, Division of Cancer Prevention and Control, National Center for Chronic Disease Prevention and Health Promotion, Centers for Disease Control and Prevention, 4770 Buford Hwy., NE (MS K–57), Atlanta, GA 30341–3717. Telephone number: 770–488–4880. E-mail address: *smt7@cdc.gov.*

NPCR: Lois Voelker, Public Health Advisor, Cancer Surveillance Branch, Division of Cancer Prevention and Control, National Center for Chronic Disease Prevention and Health Promotion, Centers for Disease Control and Prevention, 4770 Buford Hwy., NE (MS K–53), Atlanta, GA 30341–3717. Telephone number: 770–488–3095. E-mail address: *lvoelker@cdc.gov.*

Dated: January 13, 2004.

Sandra R. Manning,

Director, Procurement and Grants Office, Centers for Disease Control and Prevention.

[FR Doc. 04–1167 Filed 1–20–04; 8:45 am]

BILLING CODE 4163–18–P

DEPARTMENT OF HEALTH AND HUMAN SERVICES

Centers for Disease Control and Prevention

Disease, Disability, and Injury Prevention and Control Special Emphasis Panel (SEP): Capacity-Building Assistance To Improve the Delivery and Effectiveness of Human Immunodeficiency Virus Prevention Services for Racial/Ethnic Minority Populations, Program Announcement Number 04019

In accordance with section 10(a)(2) of the Federal Advisory Committee Act (Pub. L. 92–463), the Centers for Disease Control and Prevention (CDC) announces the following meeting:

Name: Disease, Disability, and Injury Prevention and Control Special Emphasis Panel (SEP): Capacity-Building Assistance to Improve the Delivery and Effectiveness of Human Immunodeficiency Virus Prevention Services for Racial/Ethnic Minority Populations, Program Announcement Number 04019.

Times and Dates:

1 p.m.–6 p.m., February 8, 2004 (Open)
9 a.m.–5 p.m., February 9, 2004 (Closed)
9 a.m.–5 p.m., February 10, 2004 (Closed)
9 a.m.–5 p.m., February 11, 2004 (Closed)
9 a.m.–5 p.m., February 12, 2004 (Closed)
9 a.m.–5 p.m., February 13, 2004 (Closed)

Place: The Wyndhan Atlanta—Downtown, 160 Spring Street, Atlanta, GA 30380, (404) 688–8600.

Status: Portions of the meeting will be closed to the public in accordance with provisions set forth in section 552b(c) (4) and (6), Title 5 U.S.C., and the Determination of the Director, Management Analysis and Services Office, CDC, pursuant to Public Law 92–463.

Matters to be Discussed: The meeting will include the review, discussion, and evaluation of applications received in response to Program Announcement Number 04019.

For Further Information Contact: Beth Wolfe, Resource Funding Analyst, National Center for HIV, STD, and TB Prevention, CDC, 1600 Clifton Road, NE, MS–E07, Atlanta, GA 30333, Telephone (404) 639–8531.

The Director, Management Analysis and Services Office, has been delegated the authority to sign **Federal Register** notices pertaining to announcements of meetings and other committee management activities, for both CDC and the Agency for Toxic Substances and Disease Registry.

Dated: January 13, 2004.

Alvin Hall,

Director, Management Analysis and Services Office, Centers for Disease Control and Prevention (CDC).

[FR Doc. 04–1168 Filed 1–20–04; 8:45 am]

BILLING CODE 4163–18–P

DEPARTMENT OF HEALTH AND HUMAN SERVICES

Administration for Children and Families

Submission for OMB Review; Comment Request

Title: Migrant and Seasonal Head Start Research Design Development Project.

OMB No.: New collection.

Description: The Head Start Bureau (Migrant Head Start Branch) within the Administration for Children and Families of the U.S. Department of Health and Human Services is requesting comments on a pilot study that will be used to guide the development of appropriate and effective research designs for studying Migrant and Seasonal Head Start (MSHS) programs. This study is being conducted under contract with Westat, Inc. (with Aguirre International as its subcontractor) (#282–98–0015, Task Order #44) to collect information that will guide the development of appropriate and effective research designs that could be used in an eventual national evaluation of MSHS. Such an evaluation would serve to bridge the evaluation gap between MSHS and other Head Start programs. MSHS has been excluded from previous Congressionally-mandated evaluations of Head Start due in large part to the difficulty of applying standard research designs to MSHS' highly transient population.

The Migrant and Seasonal Head Start Research Design Development Project Pilot Study will involve visits to six sites (three in the Fall and three in the Spring) where data collections will take place. Data collections will include interviews with program administrators, coordinators, teachers, parents, and other child care providers. There will also be some use of observational measures of classrooms and brief direct (one-to-one) assessments or parent and teacher reports for children ages 0–5, the full age spectrum served by the MSHS program. Data collection will take place during two time periods: Fall

(October–November) 2003 and Summer (June–August) 2004.

The pilot study data will not be used to evaluate program performance or child outcomes, but to test the feasibility of different evaluation designs that could be used during an eventual national evaluation of MSHS programs. A primary issue to be tested is whether, or under what conditions, it is possible to assess program factors and child and family outcomes in different program sites among children and families who routinely migrate through multiple sites in a relatively unpredictable manner throughout a given growing season. Another issue to test is whether standardized measures of children's competencies, and parent/teacher reports of these competencies, are appropriate for this largely Spanish-speaking sample, many of whom speak unique non-Spanish/non-English languages, and whose cultural backgrounds are also unique. This pilot study is also designed to determine how children and families can be tracked across these multiple sites, and determine the kinds and intensities of MSHS program services they obtain, including such aspects as children's curriculum and care, parent services, and coordination with community resources and services.

Respondents: Parents, Children, MSHS Teachers, MSHS Program Staff.

Annual Burden Estimates: Estimated Response Burden for Respondents to the Migrant and Seasonal Head Start Research Design Development Project.

Instrument	Number of respondents	Number of responses per respondent	Average burden hours er response	Total burden hours
MSHS Parent Interview I	150	2	.25	75.00
MSHS Parent Interview II	75	2	1.5	225.0
MSHS Teacher Interview I	6	1	.50	3.0
MSHS Teacher Interview II	6	19	.50	57.0
MSHS Child Assessment (3–5 years)	45	2	.50	45.0
MSHS Child Assessment (0–3 years)	12	2	.33	7.92
MSHS Program Staff Interviews	24	1	.50	12.0

Estimated Total Annual Burden Hours: 424.92.

SUPPLEMENTARY INFORMATION: Copies of the proposed collection may be obtained by writing to the Administration for Children and Families, Office of Administration, Office of Information Services, 370 L'Enfant Promenade, SW., Washington, DC 20447, Attn: ACF Reports Clearance Officer. E-mail address: *rsargis@cf.hhs.gov.*

OMB Comment:

OMB is required to make a decision concerning the collection of information between 30 and 60 days after publication of this document in the **Federal Register.** Therefore, a comment is best assured of having its full effect if OMB receives it within 30 days of publication. Written comments and recommendations for the proposed information collection should be sent directly to the following: Office of Management and Budget, Paperwork Reduction Project, 725 17th Street, NW., Washington, DC 20503, Attn: Desk Officer for ACF, E-mail address: *lauren__wittenberg@omb.eop.gov.*

Dated: January 14, 2004.

Robert Sargis,

Reports Clearance Officer.

[FR Doc. 04–1228 Filed 1–20–04; 8:45 am]

BILLING CODE 4184–01–M

DEPARTMENT OF HEALTH AND HUMAN SERVICES

National Institutes of Health

National Cancer Institute; Notice of Closed Meeting

Pursuant to section 10(d) of the Federal Advisory Committee Act, as amended (5 U.S.C. Appendix 2), notice is hereby given of the following meeting.

The meeting will be closed to the public in accordance with the provisions set forth in sections 552b(c)(4) and 552b(c)(6), Title 5 U.S.C., as amended. The grant applications and the discussions could disclose confidential trade secrets or commercial property such as patentable material, and personal information concerning individuals associated with the grant applications, the disclosure of which would constitute a clearly unwarranted invasion of personal privacy.

Name of Committee: National Cancer Institute Special Emphasis Panel; Spore Brain Cancer.

Date: February 9–10, 2004.

Time: 8 a.m. to 5 p.m.

Agenda: To review and evaluate grant applications and/or proposals.

Place: Sea Lodge on La Jolla Shores, 8110 Camino Del Oro, La Jolla, CA 92037.

Contact Person: Brian E. Wojcik, PhD, Scientific Review Administrator, Grants Review Branch, Division of Extramural Activities, National Cancer Institute, 6116 Executive Boulevard, Room 8019; Bethesda, MD 20892, (301) 402–2785.

(Catalogue of Federal Domestic Assistance Program Nos. 93.392, Cancer Construction; 93.393, Cancer Cause and Prevention Research; 93.394, Cancer Detection and Diagnosis Research; 93.395, Cancer Treatment Research; 93.396, Cancer Biology Research; 93.397, Cancer Centers Support; 93.398, Cancer Research Manpower; 93.399, Cancer Control, National Institutes of Health, HHS)

Dated: January 14, 2004.

Anna P. Snouffer,

Acting Director, Office of Federal Advisory Committee Policy.

[FR Doc. 04–1251 Filed 1–20–04; 8:45 am]

BILLING CODE 4140–01–M

DEPARTMENT OF HEALTH AND HUMAN SERVICES

National Institutes of Health

National Institute of Neurological Disorders and Stroke; Notice of Closed Meeting

Pursuant to section 10(d) of the Federal Advisory Committee Act, as amended (5 U.S.C. Appendix 2), notice is hereby given of the following meeting.

The meeting will be closed to the public in accordance with the provisions set forth in sections 552b(c)(4) and 552b(c)(6), Title 5 U.S.C., as amended. The grant applications and the discussions could disclose confidential trade secrets or commercial property such as patentable material, and personal information concerning individuals associated with the grant applications, the disclosure of which

would constitute a clearly unwarranted invasion of personal privacy.

Name of Committee: National Institute of Neurological Disorders and Stroke Special Emphasis Panel; ALS RFA Review.

Date: January 22, 2004.

Time: 8:30 a.m. to 5 p.m.

Agenda: To review and evaluate grant applications.

Place: The Fairmont Hotel, 2401 M Street, NW., Washington, DC 20037.

Contact Person: W. Ernest Lyons, PhD, Scientific Review Administrator, Scientific Review Branch, NINDS/NIH/DHHS, Neuroscience Center, 6001 Executive Blvd., Suite 3208, MSC 9529, Bethesda, MD 20892–9529, 301–496–4056.

This notice is being published less than 15 days prior to the meeting due to the timing limitations imposed by the review and funding cycle.

(Catalogue of Federal Domestic Assistance Program Nos. 93.853, Clinical Research Related to Neurological Disorders; 93.854, Biological Basis Research in the Neurosciences, National Institutes of Health, HHS)

Dated: January 14, 2004.

Anna Snouffer,

Acting Director, Office of Federal Advisory Committee Policy.

[FR Doc. 04–1250 Filed 1–20–04; 8:45 am]

BILLING CODE 4140–01–M

DEPARTMENT OF HEALTH AND HUMAN SERVICES

National Institutes of Health

National Institute of Nursing Research; Notice of Meeting

Pursuant to section 10(d) of the Federal Advisory Committee Act, as amended (5 U.S.C. Appendix 2), notice is hereby given of a meeting of the National Advisory Council for Nursing Research.

The meeting will be open to the public as indicated below, with attendance limited to space available. Individuals who plan to attend and need special assistance, such as sign language interpretation or other reasonable accommodation, should notify the Contact Person listed below in advance of the meeting.

The meeting will be closed to the public in accordance with the provisions set forth in sections 552b(c)(4) and 552b(c)(6), Title 5 U.S.C., as amended. The grant applications and/or contract proposals and the discussions could disclose confidential trade secrets or commercial property such as patentable material, and personal information concerning individuals associated with the grant applications and/or contract proposals, the disclosure of which would constitute a clearly unwarranted invasion of personal privacy.

Name of Committee: National Advisory Council for Nursing Research.

Date: January 27–28, 2004.

Open: January 27, 2004, 1 p.m. to 5 p.m.

Agenda: For discussion of program policies and issues.

Place: National Institutes of Health, Building 31, 31 Center Drive, Conference Room 6, Bethesda, MD 20892.

Closed: January 28, 2004, 9 a.m. to Adjournment.

Agenda: To review and evaluate grant applications and/or proposals.

Place: National Institutes of Health, Building 31, 31 Center Drive, Conference Room 6, Bethesda, MD 20892.

Contact Person: Claudette Varricchio, Program Director, National Institute of Nursing Research, National Institutes of Health, 6701 Democracy Blvd, Room 710, Bethesda, MD 20892–4870, (301) 402-6423, *varriccc@mail.nih.gov.*

This notice is being published less than 15 days prior to the meeting due to the timing limitations imposed by the review and funding cycle.

Information is also available on the Institute's/Center's Home page: *http://www.nih.gov/ninr/a_advisory.html,* where an agenda and any additional information for the meeting will be posted when available.

(Catalogue of Federal Domestic Assistance Program Nos. 93.361, Nursing Research, National Institutes of Health, HHS)

Dated: January 14, 2004.

Anna Snouffer,

Acting Director, Office of Federal Advisory Committee Policy.

[FR Doc. 04–1252 Filed 1–20–04; 8:45 am]

BILLING CODE 4140–01–M

DEPARTMENT OF HEALTH AND HUMAN SERVICES

Substance Abuse and Mental Health Services Administration

Agency Information Collection Activities: Submission for OMB Review; Comment Request

Periodically, the Substance Abuse and Mental Health Services Administration (SAMHSA) will publish a summary of information collection requests under OMB review, in compliance with the Paperwork Reduction Act (44 U.S.C. Chapter 35). To request a copy of these documents, call the SAMHSA Reports Clearance Officer on (301) 443–7978.

National Evaluation of the Comprehensive Community Mental Health Services for Children and Their Families Program, Phase Four—New—SAMHSA's Center for Mental Health Services (CMHS) is conducting Phase IV of this national evaluation project among grantees newly funded in FY 2002 and 2003. The national evaluation of the Comprehensive Community Mental Health Services for Children and Their Families Program will collect data on child mental health outcomes, family life, and service system development and performance.

Data will be collected on 32 service systems, and approximately 7,868 children and families. Data collection for this evaluation will be conducted in each site over a five-year period. The core of service system data will be collected every 18 months throughout the 5-year evaluation period, with a sustainability survey conducted in selected years. Service delivery and system variables of interest include the following: maturity of system of care development, adherence to the system of care program model, and client service experience. The length of time that individual families will participate in the study ranges from 18 to 36 months depending on when they enter the evaluation.

Child and family outcomes of interest will be collected at intake and during subsequent follow-up sessions at six-month intervals. The outcome measures include the following: child symptomatology and functioning, family functioning, material resources, and caregiver strain. In addition, an evidence-based treatment study will examine the relative impact of evidence-based treatments focused on substance use prevention within two systems of care. Time-limited studies addressing the cultural competence of services and the role of primary care providers in systems of care will be conducted at selected points during the evaluation period. Internet-based technology will be used for collecting data via Web-based surveys and for data entry and management. The average annual respondent burden is estimated below.

Instrument and respondent	No. of respondents	Avg. # of responses per respondent	Hours per response	Total burden hours	6.5 yr. avg. annual burden hours
System of Care Assessment					
Interview Guides and Data Collection Forms: Key site informants	672	3	1	2,016	310
Interagency Collaboration Scale: Key site informants	672	3	0.13	269	41
Cross-sectional Descriptive Study					
Descriptive Interview Questionnaire: Caregiver	7,868	6	0.283	10,097	1,279
Child and Family Outcome Study					
Caregiver Strain Questionnaire: Caregiver	7,868	6	0.167	7,884	1,213
Child Behavior Checklist: Caregiver	7,868	6	0.333	15,720	2,418
Education Questionnaire: Caregiver	7,868	6	0.1	4,721	726
Living Situations Questionnaire: Caregiver	7,868	6	0.083	3,934	605
The Family Life Questionnaire: Caregiver	7,868	6	0.050	2,360	363
Behavioral and Emotional Rating Scale: Caregiver	7,475	6	0.167	7,490	1,152
Columbia Impairment Scale: Caregiver	7,475	6	0.083	3,737	575
The Vineland Screener: Caregiver	393	6	0.25	590	91
Delinquency Survey: Youth	4,721	6	0.167	4,721	726
Behavioral and Emotional Rating Scale: Youth	4,721	6	0.167	4,721	726
Gain-quick Substance Related Issues: Youth	4,721	6	0.083	2,360	363
Substance Use Scale: Youth	4,721	6	0.100	2,832	436
Revised Children's Manifest Anxiety Scales: Youth	4,721	6	0.050	1,416	218
Reynolds Adolescent Depression Scale-Second Edition: Youth	4,721	6	0.050	1,416	218
Youth Information Questionnaire: Youth	4,721	6	0.167	4,721	629
Service Experience Study					
Multi-Sector Service Contacts: Caregiver	7,868	5	0.333	13,113	2,017
Cultural Competence and Service Provision Questionnaire: Caregiver	7,868	5	0.167	6,557	1,009
Youth Services Survey—Family: Caregiver	7,868	5	0.083	3,278	504
Youth Services Survey: Youth	4,721	5	0.083	1,967	303
Treatment Effectiveness Study					
Diagnostic Interview Schedule for Children version IV: Caregiver	262	1	1.000	262	40
Treatment Fidelity Protocol: Caregiver	240	5	0.500	600	92
Treatment Fidelity Protocol: Youth	240	5	0.500	600	92
Treatment Fidelity Protocol: Provider	240	5	0.500	600	92
Treatment Outcome Measure: Caregiver	240	6	1.000	1,440	221
Treatment Outcome Measure: Youth	240	6	1.000	1,440	221
System-of-Care Practice Review: Caregiver	80	1	1.000	80	12
System-of-Care Practice Review: Youth	80	1	0.750	60	9
System-of-Care Practice Review: Provider	80	1	1.000	80	12
System-of-Care Practice Review: Informal Provider	80	1	0.250	20	3
Provider Attitudes Survey-Site Selection Screener: Provider	450	1	0.083	37	6
Provider Attitudes Survey:	240	1	0.083	20	3
Sustainability Study					
Sustainability Survey: Provider/Administrator	128	3	0.750	288	44
Culturally Competent Practices Study					
Culturally Competent Practices Survey: Provider	960	1	0.500	480	74
Culturally Competent Practices Focus Group: Caregiver	36	1	1.500	54	8
Culturally Competent Practices Focus Group: Youth	36	1	1.500	54	8
Culturally Competent Practices Focus Group: Provider/Administrator	60	1	1.500	90	14
Primary Care Providers Study					
Primary Care Providers Survey: Provider	960	1	0.333	320	49
Total	.....	.....	.....	112,447	17,299

Written comments and recommendations concerning the proposed information collection should be sent within 30 days of this notice to: SAMHSA Desk Officer, Human Resources and Housing Branch, Office of Management and Budget, New Executive Office Building, Room 10235, Washington, DC 20503; due to potential

delays in OMB's receipt and processing of mail sent through the U.S. Postal Service, respondents are encouraged to submit comments by fax to: 202–395–6974.

Dated: January 13, 2004.

Anna Marsh,

Acting Executive Officer, SAMHSA.

[FR Doc. 04–1169 Filed 1–20–04; 8:45 am]

BILLING CODE 4162–20–P

DEPARTMENT OF HEALTH AND HUMAN SERVICES

Substance Abuse and Mental Health Services Administration

Suspension of Application Receipt Dates for a Fiscal Year (FY) 2004 Funding Opportunity

AGENCY: Center For Mental Health Services (CMHS), Center For Substance Abuse Prevention (CSAP), and Center For Substance Abuse Treatment (CSAT), Substance Abuse and Mental Health Services Administration (SAMHSA), HHS.

ACTION: Suspension of future application receipt dates until further notice for SAMHSA/CMHS, CSAP, and CSAT Knowledge Dissemination Conference Grants (PA 03–002).

SUMMARY: This notice is to inform the public that future application receipt dates under the SAMHSA/CMHS, CSAP, and CSAT program announcement, Knowledge Dissemination Conference Grants—PA 03–002, are being cancelled until further notice. Effective as of January 13, 2004, no applications will be received for the future September 10 and January 10 receipt dates under this announcement.

The notice of funding opportunity for PA 03–002 was published in the **Federal Register** on November 12, 2002, (Vol. 67, Number 218, pages 68676–68677).

SAMHSA/CMHS, CSAP, and CSAT will be reissuing the Knowledge Dissemination Conference Grants announcement for FY 2004.

Information related to this notice may be obtained from:

For questions concerning mental health topics, contact: David Morrissette, DSW, Center for Mental Health Services/SAMHSA, 5600 Fishers Lane, Room 11C–22, Rockville, MD 20857, Phone: (301) 443–3653, E-Mail: *dmorriss@samhsa.gov.*

For questions regarding substance abuse treatment topics, contact: Kim Plavsic, Center for Substance Abuse Treatment/SAMHSA, 5515 Security Lane, Suite 740, Rockville, MD 20852, Phone: (301) 443–7916, E-Mail: *kplavsic@samhsa.gov.*

For questions concerning substance abuse prevention topics, contact: Rosa I. Merello, Center for Substance Abuse Prevention/SAMHSA, 5515 Security Lane, Suite 800, Rockville, MD 20852, Phone: (301) 443–7462, E-Mail: *rmerello@samhsa.gov.*

For questions on grants management issues, contact: Kathleen Sample, Division of Grants Management, SAMHSA, Rockwall II, Room 630, 5600 Fishers Lane, Rockville, MD 20857, (301) 443–9667, E-mail: *ksample@samhsa.gov.*

Dated: January 13, 2004.

Daryl Kade,

Director, Office of Policy, Planning and Budget, Substance Abuse and Mental Health Services Administration.

[FR Doc. 04–1151 Filed 1–20–04; 8:45 am]

BILLING CODE 4162–20–P

DEPARTMENT OF THE INTERIOR

Fish and Wildlife Service

Notice of Scoping Meetings and Intent To Prepare an Environmental Assessment for the Proposed Designation of Critical Habitat for the Southwestern Willow Flycatcher

AGENCY: Fish and Wildlife Service, Interior.

ACTION: Notice of intent.

SUMMARY: We, the Fish and Wildlife Service (Service), are providing this notice to advise the public that a draft environmental assessment will be prepared, pursuant to the National Environmental Policy Act (NEPA) of 1969, as amended (42 U.S.C. 432 *et seq.*), in conjunction with a proposed rule to designate critical habitat for the southwestern willow flycatcher (flycatcher) (*Empidonax trailli extimus*) under section 4 of the Endangered Species Act of 1973, as amended (Act). The historical range of the flycatcher includes southern California; Arizona; New Mexico; southern Nevada, Utah, and Colorado; and west Texas. We will hold eight public informational sessions and scoping meetings (*see* **DATES** and **ADDRESSES** sections).

Through this notice and the public scoping meetings, we are seeking comments or suggestions from the public, other concerned governmental agencies, tribes, the scientific community, the business community, or any other interested parties concerning the scope of the environmental analysis, including the alternatives that should be analyzed.

DATES: Comments must be submitted directly to the Service (*see* **ADDRESSES** section) on or before March 8, 2004, or at any of the eight scoping meetings to be held in January and February 2004.

We will hold public informational sessions followed by scoping meetings in a workshop format at the following dates and times:

1. January 26, 2004: Phoenix, AZ. Informational session: 6:30 p.m. Scoping meeting: 7 p.m.
2. January 27, 2004: Silver City, NM. Informational session: 6:30 p.m. Scoping meeting: 7 p.m.
3. January 28, 2004: Albuquerque, NM. Informational session: 6:30 p.m. Scoping meeting: 7 p.m.
4. January 29, 2004: Alamosa, CO. Informational session: 6:30 p.m. Scoping meeting: 7 p.m.
5. February 2, 2004: Las Vegas, NV. Informational session: 6:30 p.m. Scoping meeting: 7 p.m.
6. February 3, 2004: Lake Isabella, CA. Informational session: 6:30 p.m. Scoping meeting: 7 p.m.
7. February 4, 2004: Corona/City of Chino, CA. Informational session: 6:30 p.m. Scoping meeting: 7 p.m.
8. February 5, 2004: Escondido, CA. Informational session: 6:30 p.m. Scoping meeting: 7 p.m.

ADDRESSES:

Meetings

The public informational sessions and scoping meetings will be held at the following locations:

1. Phoenix, AZ: Fraternal Order of Police Lodge No. 2, 12851 N. 19th Ave., Phoenix, AZ 85029–2654.
2. Silver City, NM: Flame Convention Center, 2800 Pinos Altos Road (West of 32nd St. & Hwy. 180), Silver City, NM 88061.
3. Albuquerque, NM: Indian Pueblo Cultural Center, 2401 12th Street NW., Albuquerque, NM 87104.
4. Alamosa, CO: Alamosa Family Recreation Center, 2222 Old Sanford Road, Alamosa, CO 81101.
5. Las Vegas, NV: Bureau of Land Management Building, 4701 N. Torrey Pines Drive, Las Vegas, NV 89130.
6. Lake Isabella, CA: Lake Isabella Senior Center, Veteran's Facility, Room 1, 6405 Lake Isabella Blvd., Lake Isabella, CA 93240.
7. Corona/City of Chino, CA: El Prado Golf Course, 6555 Pine Avenue Chino, CA 91710.
8. Escondido, CA: Escondido Center for the Arts, 340 N. Escondido Blvd., Escondido, CA 92025.

Information, comments, or questions related to preparation of the draft

environmental assessment and the NEPA process should be submitted to Steve Spangle, Field Supervisor, Arizona Ecological Services Office, U.S. Fish and Wildlife Service, 2321 West Royal Palm Road, Suite 103, Phoenix, Arizona 85021. Written comments may also be sent by facsimile to (602) 242–2513 or by e-mail to *WIFLcomments@fws.gov*.

FOR FURTHER INFORMATION CONTACT: Questions regarding the scoping process, preparation of the draft environmental assessment, or the development of a proposed rule designating critical habitat, may be directed to Greg Beatty at telephone number (602) 242–0210 or by electronic mail at *greg_beatty@fws.gov*.

SUPPLEMENTARY INFORMATION:

Public Comments Solicited

Our NEPA document (*e.g.*, environmental assessment or impact statement) will consider reasonable alternatives for the designation of critical habitat for the southwestern willow flycatcher. At this time, the complexity and geographic range of a potential critical habitat designation preclude us from knowing what the preferred alternative (proposed action) or other alternatives will be. However, we intend to utilize those areas identified as important stream reaches in the Southwestern Willow Flycatcher Recovery Plan (U.S. Fish and Wildlife Service 2002) as a starting point in the process of identifying areas that may meet the definition of critical habitat. We also intend to consider the history of consultations under section 7 of the Act for the species in determining potential beneficial or adverse environmental impacts which may result from the proposed designation. Past consultations have included an evaluation of impacts on the species or its critical habitat from grazing, road development, housing development, water management, stream habitat renovation or restoration, Federal agency land resource management plans, fire abatement activities, electrical transmission structures, and protection of other endangered or threatened species in the riparian area. We wish to ensure that any proposed rule-making to designate critical habitat for the flycatcher and the draft environmental document on the proposed action effectively evaluates all potential issues, including the possible environmental impacts associated with past and future consultations for the species and its habitat.

Therefore, we are seeking comments and suggestions on the following issues for consideration in the preparation of the draft environmental assessment (EA) and the proposed critical habitat designation for the flycatcher. This list is not intended to be all inclusive, and comments on any other pertinent issues are welcome.

Issues related to the scope of the designation:

(1) Published or unpublished information establishing the physical and biological features essential to the conservation of the flycatcher.

(2) Historically or currently occupied areas that may contain the physical and biological features essential to the conservation of the flycatcher and may require special management considerations or protections (*i.e.*, specific stream reaches), and the nature of the special management considerations or protections which may be required.

(3) A detailed description of essential or nonessential flycatcher areas, including maps and distinct beginning and ending points such as roads, tributaries, and so forth.

(4) Published or unpublished information on why identified areas are important (or are no longer important) for flycatcher conservation and whether or not the areas are currently occupied by the species. Specifically, please tell us what these areas provide (or no longer provide) in the way of important flycatcher breeding, feeding, dispersal, and migratory habitat. Please provide us copies of the sources of this information.

(5) Any draft or final management plans, Habitat Conservation Plans, or other agreements that provide a conservation benefit to the flycatcher. Please provide us copies of this information.

(6) What the lateral extent of critical habitat should be from a stream or other water source. We recognize, due to the dynamic nature of riparian habitat, that designating the 100-year floodplain may be appropriate, and, since we would like to take this into consideration we seek your comments.

(7) The existence of flycatcher-specific land management plans.

Issues related to evaluation of the environmental impacts:

The general question on which we are seeking comments is the identification of direct, indirect, beneficial, and adverse effects caused by the prior or new designation of critical habitat for the flycatcher. In addressing this question, you may wish to consider the following issues:

(a) Impacts on floodplains, wetlands, wild and scenic rivers, or ecologically sensitive areas;

(b) Impacts on park lands, cultural or historic resources;

(c) Impacts on human health and safety;

(d) Impacts on air, soil, and water;

(e) Impacts on prime agricultural lands;

(f) Impacts to other endangered or threatened species;

(g) Any of the impacts identified in prior section 7 consultations as discussed above;

(h) Disproportionately high and adverse impacts on minority and low-income populations;

(i) Any other potential or socioeconomic effects; and

(j) Any potential conflicts with other Federal, State, local, or Tribal environmental laws or requirements.

We seek comment from Federal, State, local, or Tribal government agencies, the scientific or business community, or any other interested party. To promulgate a proposed rule and to determine whether to prepare a finding of no significant impact or an environmental impact statement, we will take into consideration all comments and any additional information received. All comments, including names and addresses, will become part of the supporting record.

If you wish to provide comments and/or information, you may submit your comments and materials by any one of several methods (*see* **ADDRESSES**). Comments submitted electronically should be in the body of the e-mail message itself or attached as a text file (ASCII), and should not use special characters or encryption. Please also include ''Attn: Flycatcher NEPA Scoping,'' your full name, and your return address in your e-mail message. Our practice is to make comments, including names and home addresses of respondents, available for public review during regular business hours. Respondents may request that we withhold their home addresses, which we will honor to the extent allowable by law. There also may be circumstances in which we would withhold a respondent's identity, as allowable by law. If you wish for us to withhold your name and/or address, you must state this request prominently at the beginning of your comment. However, we will not consider anonymous comments. To the extent consistent with applicable law, we will make all submissions from organizations or businesses, and from individuals identifying themselves as representatives or officials of organizations or businesses, available for public inspection in their entirety. Comments and materials received will

be available for public inspection, by appointment, during normal business hours at Arizona Ecological Services Office in Phoenix, Arizona (*see* **ADDRESSES**).

We will give separate notice of the availability of the draft NEPA compliance document, when completed, so that interested and affected people may comment on the draft and have input into the final decision.

Background

The southwestern willow flycatcher (flycatcher) is a small grayish-green passerine bird (Family Tyrannidae) measuring approximately 5.75 inches. It is one of four currently recognized willow flycatcher subspecies (Phillips 1948; Unitt 1987; Browning 1993). The flycatcher is a neotropical migrant that breeds in the southwestern U.S. during the spring and summer and migrates to Mexico, Central America, and possibly northern South America for the nonbreeding season (Phillips 1948; Stiles and Skutch 1989; Peterson 1990; Ridgely and Tudor 1994; Howell and Webb 1995). The historical breeding range of the flycatcher included riparian areas in southern California, Arizona, New Mexico, western Texas, southwestern Colorado, southern Utah, extreme southern Nevada, and extreme northwestern Mexico (Sonora and Baja) (Unitt 1987).

The flycatcher breeds in dense riparian habitats across the southwestern United States from sea level in California to approximately 8,500 feet (2591 meters) in east-central Arizona and southwestern Colorado (U.S. Fish and Wildlife Service 2002). Flycatchers are known to primarily use Geyer willow (*Salix geyeriana*), Coyote willow (*Salix exigua*), Goodding's willow (*Salix gooddingii*), boxelder (*Acer negundo*), saltcedar (*Tamarix* sp.), and Russian olive (*Elaeagnus angustifolio*) for nesting. Other plant species less commonly used for nesting include buttonbush (*Cephalanthus* sp.), black twinberry (*Lonicera involucrata*), cottonwood (*Populus* spp.), white alder (*Alnus rhombifolia*), blackberry (*Rubus ursinus*), stinging nettle (*Urtica* spp.), and live oak (*Quercus agrifolia*).

Open water, cienegas (marshy seeps), or saturated soil are typically found in the vicinity of flycatcher territories and nests; flycatchers sometimes nest in areas where nesting substrates were in standing water (U.S. Fish and Wildlife Service 2002). However, hydrological conditions at a particular site can vary remarkably in the arid Southwest within a season and among years. At some locations, particularly during drier years, water or saturated soil is only present early in the breeding season (*i.e.*, May and part of June). However, the total absence of water or visibly saturated soil has been documented at several nesting sites where the river channel has been modified (*e.g.*, creation of pilot channels), where modification of subsurface flows has occurred (*e.g.*, agricultural runoff), or as a result of changes in river channel configuration after flood events (Spencer *et al.* 1996).

The flycatcher's nesting habitat is dynamic in that it varies in suitability, location, and occupancy over time (Finch and Stoleson 2000). For example, willows which form part of the nesting habitat can develop from seeds to suitability in 5 years, or heavy runoff can remove/reduce habitat suitability in a day. Because river channels, river flow, and floodplains are varied and can change over time, the location and quality of nesting habitat and associated bird reproductive performance may also change over time. The development of flycatcher habitat is a constantly changing process involving maintenance, recycling, and regeneration of habitat.

Declining flycatcher numbers have been attributed to loss, modification, and fragmentation of riparian breeding habitat; loss of wintering habitat; and loss of young by the brown-headed cowbird (*Molothrus ater*) (U.S. Fish and Wildlife Service 1995, 2002). Willow flycatcher nests are invaded by brown-headed cowbirds, which lay their eggs in the host's nest. Habitat loss and degradation are caused by a variety of factors, including, but not limited to: urban, recreational, and agricultural development; water diversion and groundwater pumping; river channelization; dams and dam operations; and livestock grazing. Fire is an increasing threat to willow flycatcher habitat (U.S. Fish and Wildlife Service 2002), especially when saltcedar vegetation (DeLoach 1991) is the predominant vegetation type and where water diversions and/or groundwater pumping dry out riparian vegetation areas (Sogge *et al.* 1997).

At the time of the release of the Southwestern Willow Flycatcher Recovery Plan in 2003 (U.S. Fish and Wildlife Service 2002), at least 986 flycatcher territories were known across its current range in California, Nevada, Utah, Colorado, Arizona, and New Mexico. Although previously documented, no recent flycatcher breeding territories have been detected in Texas.

Previous Federal Actions

We listed the flycatcher as endangered, without critical habitat, on February 27, 1995 (U.S. Fish and Wildlife Service 1995). Critical habitat was later designated on July 22 and clarified on August 20, 1997 (U.S. Fish and Wildlife Service 1997a, 1997b). On May 11, 2001, the 10th Circuit Court of Appeals set aside designated critical habitat in those states under the 10th circuit's jurisdiction (New Mexico) and the Service decided to set aside critical habitat designated for the flycatcher in all other states (California and Arizona). The Court instructed that we issue a new critical habitat designation in compliance with the Court's ruling. On May 2, 2002, we sent a scoping letter to over 800 interested parties requesting information in order to develop a new critical habitat proposal. On September 30, 2003, the 10th Circuit Court established a deadline for issuance of the flycatcher critical habitat designation. The Court ordered the Service to have a proposed critical habitat designation completed by September 30, 2004, and final designation by September 30, 2005. The previous flycatcher critical habitat designation and other related documents can be viewed on the Arizona Ecological Services' southwestern willow flycatcher web page. To reach our flycatcher site, type in our Web address (*http://arizonaes.fws.gov*), click on ''document library'', then ''documents by species'', and then the words, ''southwestern willow flycatcher.''

A final Southwestern Willow Flycatcher Recovery Plan (Recovery Plan) was signed by the U.S. Fish and Wildlife Service's Region 2 Director on August 30, 2002, and released to the public in March 2003. The Plan can also be found at the Arizona Ecological Services' southwestern willow flycatcher web page. The Plan describes the reasons for endangerment and the current status of the flycatcher, addresses important recovery actions, includes detailed issue papers on management issues, and provides recovery goals.

Identification of Environmental Issues and Critical Habitat

The purpose of this scoping process is to aid in the development of (1) a critical habitat proposal and (2) an environmental assessment by collecting pertinent information as described above.

We are the lead Federal agency for compliance with NEPA for this action. The draft environmental assessment

will incorporate public concerns in the analysis of impacts associated with the proposed action and associated project alternatives. The draft environmental assessment will be made available for a minimum 30-day public review period, during which comments will be solicited on the adequacy of the document. After scoping, it may be determined that an environmental impact statement is required. If so, a Notice of Intent will be published in the **Federal Register**. The final NEPA document (*e.g.*, environmental assessment or environmental impact statement) will address the comments we receive during public review and will be furnished to all who commented on the draft environmental document, and made available to anyone who requests a copy. This notice is provided pursuant to regulations for implementing the National Environmental Policy Act of 1969 (40 CFR 1506.6).

A new proposal to designate critical habitat for the southwestern willow flycatcher may be substantially different from the previously designated critical habitat (U.S. Fish and Wildlife Service 1997a, 1997b). The process to designate critical habitat will include at least the following elements: (1) Compilation and analysis of all new biological information on the species; (2) review and update of the administrative record; (3) review of the overall approach to the conservation of the southwestern willow flycatcher by Federal, State, local, or Tribal agencies in the bird's current range and other areas where the species historically occurred; (4) review of available information that pertains to the habitat requirements of this species, including material received during the public comment period from this notice and comments on the listing and previous designation; (5) review of actions identified in the Southwestern Willow Flycatcher Recovery Plan (U.S. Fish and Wildlife Service 2002); (6) development of a precise definition of the primary constituent elements, including a discussion of the specific biological and physical features essential to the survival of the southwestern willow flycatcher; (7) maps of critical habitat within river reaches; (8) analysis of the potential economic and other relevant impacts of designating critical habitat; and (9) analysis of the potential consequences of the preferred alternatives through NEPA.

References Cited

A complete list of all references cited in this notice is available, upon request, from the U.S. Fish and Wildlife Service, Arizona Ecological Services Field Office (*see* **ADDRESSES** section).

Authority: The authority for this action is the Endangered Species Act of 1973 (16 U.S.C. 1531 *et seq.*).

Dated: January 14, 2004.

Craig Manson,

Assistant Secretary for Fish and Wildlife and Parks.

[FR Doc. 04–1298 Filed 1–20–04; 8:45 am]

BILLING CODE 4310–55–P

DEPARTMENT OF THE INTERIOR

Bureau of Land Management

[AZ–910–0777–26–241A]

State of Arizona Resource Advisory Council Meeting

AGENCY: Bureau of Land Management, Interior.

ACTION: Arizona Resource Advisory Council meeting notice.

SUMMARY: This notice announces a meeting and tour of the Arizona Resource Advisory Council (RAC).

The business meeting will be held on February 18, 2004, at the BLM Yuma Field Office, 2555 East Gila Ridge Road, Yuma, Arizona. It will begin at 9 a.m. and conclude at 4 p.m. The agenda items to be covered include: Review of the December 4, 2003 meeting minutes; BLM State Director's Update on Statewide Issues; Presentations on BLM Land Tenure and Acquisition Program, Cultural Resources Program and the Wild Horse and Burro Foundation; RAC discussion and comments on the BLM Draft Grazing Environmental Impact Statement and Proposed Grazing Regulation changes; RAC Questions on Written Reports from BLM Field Office Managers; Field Office Rangeland Resource Team Proposals; Reports by the Standards and Guidelines, Recreation, Off-Highway Vehicle Use, Public Relations, Land Use Planning and Tenure, and Wild Horse and Burro Working Groups; Reports from RAC members; and Discussion of future meetings. A public comment period will be provided at 11 a.m. on February 18, 2004, for any interested persons who wish to address the Council.

On February 19, 2004, the RAC will tour Sears Point, a significant cultural site with prehistoric and historic petroglyphs near Yuma, Arizona from 8 a.m. until 12 p.m.

FOR FURTHER INFORMATION CONTACT: Deborah Stevens, Bureau of Land Management, Arizona State Office, 222 North Central Avenue, Phoenix, Arizona 85004–2203, (602) 417–9215.

Michael Taylor,

Acting Arizona State Director.

[FR Doc. 04–1170 Filed 1–20–04; 8:45 am]

BILLING CODE 4310–32–M

DEPARTMENT OF THE INTERIOR

Bureau of Reclamation

Reservoir Operations To Benefit Endangered Fishes in the Gunnison and Colorado Rivers, Aspinall Unit, Colorado River Storage Project, Colorado

AGENCY: Bureau of Reclamation, Interior.

ACTION: Notice of intent to prepare a Draft Environmental Impact Statement and announcement of public scoping meetings.

SUMMARY: Pursuant to the National Environmental Policy Act (NEPA) of 1969, as amended, the Bureau of Reclamation (Reclamation) intends to prepare a draft environmental impact statement (EIS) to describe potential effects of operational changes for the Aspinall Unit that are related to compliance with the Endangered Species Act (ESA). Reclamation is the lead Federal agency for NEPA compliance for the proposed Federal action.

DATES AND ADDRESSES: To receive input from interested agencies, organizations, and individuals, public scoping meetings will be held in Gunnison, Delta, and Grand Junction, Colorado. Scoping is an early and public process for determining the issues to be addressed and for identifying any significant issues and suggested alternatives related to the proposed Federal action. The scoping period will be open from January 21, 2004 to March 15, 2004. Public scoping meetings will be held at the following times and locations:

- February 24, 2004–6:30 to 9 p.m., Gunnison County Multipurpose Building (Fairgrounds), 275 South Spruce Street, Gunnison, Colorado.
- February 25, 2004–6:30 to 9 p.m., Delta Middle School Auditorium, 822 Grand Avenue, Delta, Colorado.
- February 26, 2004–6:30 to 9 p.m., Mesa State College, Liff Auditorium, 12th and Elm Street, Grand Junction, Colorado.

Reclamation also invites written comments during the scoping period. Written comments regarding the scope and content of the draft EIS should be sent directly to Ed Warner, Bureau of

Reclamation, Western Colorado Area Office, 2764 Compass Drive, Suite 106, Grand Junction, Colorado 81506; telephone (970) 248–0654; faxogram (970) 248–0601; or e-mail: *aspinalleis@uc.usbr.gov.* Written comments should be received no later than March 15, 2004, to be most effectively considered.

Those not desiring to submit comments or suggestions at this time, but who would like to receive a copy of the draft EIS, should contact Ed Warner at the above address or send an e-mail request to *aspinalleis@uc.usbr.gov.* When the draft EIS is complete, its availability will be announced in the **Federal Register**, in the local news media, and through direct contact with interested parties. Comments will be solicited on the draft document.

FOR FURTHER INFORMATION CONTACT: Ed Warner, Bureau of Reclamation, Western Colorado Area Office, 2764 Compass Drive, Suite 106, Grand Junction, Colorado 81506; telephone (970) 248–0654; e-mail: *ewarner@uc.usbr.gov*; or Steve McCall, Bureau of Reclamation, Western Colorado Area Office, 2764 Compass Drive, Suite 106, Grand Junction, Colorado 81506; telephone (970) 248–0638; e-mail: *smccall@uc.usbr.gov.*

SUPPLEMENTARY INFORMATION: The purpose of Reclamation's proposed action is to operate the Aspinall Unit to avoid jeopardy to endangered species while maintaining the congressionally authorized Unit purposes. Alternative operations will be considered. Authorized purposes include (1) Regulating the flow of the Colorado River, (2) storing water for beneficial consumptive use, (3) providing for the reclamation of arid and semi-arid land, (4) providing for the generation of hydroelectric power, (5) providing for fish and wildlife enhancement and public recreation, (6) providing for the control of floods, and (7) allowing the Upper Basin States to develop Colorado River Compact apportioned waters.

The Aspinall Unit is located on the Gunnison River in Gunnison and Montrose Counties, Colorado, and consists of Blue Mesa, Morrow Point and Crystal Reservoirs, Dams, and Powerplants. Blue Mesa Reservoir is the most upstream reservoir and is the largest reservoir in Colorado. Blue Mesa and Morrow Point Reservoirs currently operate to meet peaking power demands for the Colorado River Storage Project (CRSP). Crystal Reservoir, the most downstream reservoir, is operated to regulate flows in the Gunnison River.

Flow Recommendations

The U.S. Fish and Wildlife Service (Service) published flow recommendations entitled *Flow Recommendations to Benefit Endangered Fishes in the Colorado and Gunnison Rivers* in July 2003. In general, the flow recommendations call for higher flows in the spring and moderate baseflows the remainder of the year. Reclamation will develop alternatives to address the Service's flow recommendations. These alternatives will be the basis of analysis for this EIS. Copies of the flow recommendations are available on the Internet at *http://www.r6.fws.gov/crrip/doc/GunnCoflowrec.pdf.*

Aspinall Unit and the Colorado River Storage Project

The Aspinall Unit was authorized in 1956 as part of the CRSP. The CRSP provides for comprehensive development of the Upper Colorado River Basin by furnishing the long-term water storage needed to permit states in the Upper Basin to meet their flow obligation at Lee Ferry, Arizona, as defined in the Colorado River Compact, and still utilize their apportioned water. The CRSP includes four storage units: Glen Canyon on the Colorado River, Flaming Gorge on the Green River, Navajo on the San Juan River, and Aspinall on the Gunnison River. The reservoirs formed by the four units of the CRSP have a total capacity of nearly 34 million acre-feet.

Reclamation is required to comply with the ESA for operations of CRSP facilities, including the Aspinall Unit. Within the exercise of its discretionary authority, Reclamation must avoid jeopardizing the continued existence of listed species and destroying or adversely modifying designated critical habitat.

The Aspinall Unit was constructed between 1963 and 1977 and consists of a series of three dams and reservoirs (Blue Mesa, Morrow Point, and Crystal) along a 40-mile reach of the Gunnison River. Primary water storage occurs in the uppermost and largest reservoir, Blue Mesa. Powerplants at Blue Mesa and Morrow Point are operated on a peaking basis, while the dam and powerplant at Crystal are operated to regulate downstream flows. Since 1965, recreational development and use of lands associated with the Aspinall Unit has been managed by the National Park Service as the Curecanti Recreation Area. The Western Area Power Administration markets hydropower from the Aspinall Unit. Fish and wildlife facilities, including wildlife areas and fishing easements, are managed by other agencies.

Reclamation operates the Aspinall Unit within certain sideboards including annual hydrologic conditions, senior water rights, minimum downstream flow requirements, powerplant and outlet capacities, reservoir elevation targets, fishery management recommendations, and others. Some sideboards can be considered mandates, such as honoring senior water rights and flood control, while others, such as reservoir elevation criteria to reduce landslides, are given a high priority. To conserve water for later use, an operational target is to fill Blue Mesa Reservoir by the end of July. Another operational target is to draw Blue Mesa Reservoir down to an elevation of 7,490 feet by December 31 to provide space for the next spring's runoff, and to avoid ice damage upstream. In general, operation of the Aspinall Unit has reduced downstream spring peak flows and increased flows during the remainder of the year.

The Aspinall Unit was largely completed prior to passage of the Endangered Species Act in 1973. Operation of the Unit, which is located upstream from historical habitat of four endangered fish species, changed the flow regime of the lower Gunnison and Colorado Rivers within what is now critical habitat for the Colorado pikeminnow, razorback sucker, humpback chub, and bonytail. ESA consultation on the operation of the Aspinall Unit will be completed concurrently with the EIS process.

Upper Colorado River Endangered Fish Recovery Program

Since 1988, Reclamation and the Upper Colorado River Endangered Fish Recovery Program (Recovery Program) have worked together to address upper Colorado River water issues. The Recovery Program is a partnership created to recover the endangered Colorado pikeminnow, razorback sucker, humpback chub, and bonytail while allowing for continued and future water development. The Recovery Program was initiated in 1988 when a cooperative agreement was signed by the Governors of Colorado, Utah, and Wyoming; the Secretary of the Interior; and the Administrator of the Western Area Power Administration. Recovery Program partners include the Colorado River Energy Distributors Association, Colorado Water Congress, Western Resource Advocates, State of Colorado, State of Utah, State of Wyoming, The Nature Conservancy, Reclamation, the Service, National Park Service, Utah Water Users Association, Western Area

Power Administration, and Wyoming Water Association.

Public Disclosure

It is our practice to make comments, including names and home addresses of respondents, available for public review. Individual respondents may request that we withhold their home address from public disclosure, which we will honor to the extent allowable by law. There also may be circumstances in which we would withhold a respondent's identify from public disclosure, as allowable by law. If you wish us to withhold your name and/or address, you must state this prominently at the beginning of your comment. We will make all submissions from organizations or businesses, and from individuals identifying themselves as representatives or officials of organizations or businesses, available for public disclosure in their entirety.

Dated: January 14, 2004.

Connie L. Rupp,

Assistant Regional Director—UC Region, Bureau of Reclamation.

[FR Doc. 04–1171 Filed 1–20–04; 8:45 am]

BILLING CODE 4310–MN–P

DEPARTMENT OF JUSTICE

Antitrust Division

Notice Pursuant to the National Cooperative Research and Production Act of 1993—AAF Association, Inc.

Notice is hereby give that, on December 19, 2003, pursuant to section 6(a) of the National Cooperative Research and Production Act of 1993, 15 U.S.C. 4301 *et seq.* (''the Act''), AAF Association, Inc. has filed written notifications simultaneously with the Attorney General and the Federal Trade Commission disclosing changes in its membership status. The notifications were filed for the purpose of extending the Act's provisions limiting the recovery of antitrust plaintiffs to actual damages under specified circumstances. Specifically, BAE Systems, San Diego, CA; Curious Rabbit Software, Livermore, CA; Diaquest LLC, Benicia, CA; Eastman Koday Company, Rochester, NY; Merging Tech Inc., Northbrook, IL; Synthetic Aperture, San Juan Capistrano, CA; and Universitat Pompeu Fabra, Barcelona, Spain have been added as parties to this venture. Also, da Vinci Systems, Inc., Coral Springs, FL; Leitch Incorporated, Burbank, CA; and VRT (Vlaamse Radio- en Televisioeomroep), Brussels, Belgium have been dropped as parties to this venture.

No other changes have been made in either the membership or planned activity of the group research project. Membership in this group research project remains open, and AAF Association, Inc. intends to file additional written notification disclosing all changes in membership.

On March 28, 2000, AAF Association, Inc. filed its original notification pursuant to Section 6(a) of the Act. The Department of Justice published a notice in the **Federal Register** pursuant to Section 6(b) of the Act on June 29, 2000 (65 FR 40127).

The last notification was filed with the Department on September 11, 2003. A notice was published in the **Federal Register** pursuant to section 6(b) of the Act on October 1, 2003 (68 FR 56650).

Dorothy B. Fountain,

Deputy Director of Operations, Antitrust Division.

[FR Doc. 04–1155 Filed 1–20–04; 8:45 am]

BILLING CODE 4410–11–M

DEPARTMENT OF JUSTICE

Antitrust Division

Notice Pursuant to the National Cooperative Research and Production Act of 1993—Deep Trek High Temperature Electronics

Notice is hereby given that, on December 18, 2003, pursuant to section 6(a) of the National Cooperative Research and Production Act of 1993, 15 U.S.C. 4301 *et seq.* (''the Act''), Deep Trek High Temperature Electronics has filed written notifications simultaneously with the Attorney General and the Federal Trade Commission disclosing (1) the identities of the parties and (2) the nature and objectives of the venture. The notifications were filed for the purpose of invoking the Act's provisions limiting the recovery of antitrust plaintiffs to actual damages under specified circumstances. Pursuant to Section 6(b) of the Act, the identities of the parties are Honeywell International Inc., Plymouth, MN: Schlumberger Technology Corporation, Sugar Land, TX; Baker Hughes Incorporated, Houston, TX; Halliburton Engine Services, Carrollton, TX; Goodrich Engine Control Systems, Birmingham, United Kingdom; Qwartzdyne, Inc., Salt Lake City, UT; Novatek Engineering, Inc., Provo, UT; and BP America Inc., Houston, TX. The nature and objectives of the venture are to develop a suite of high temperature electronic components for the purpose of addressing the need for high temperature instrumentation in the gas and petroleum deep well domain. The project is being conducted in connection with Honeywell's role as the prime recipient under U.S. Department of Energy Cooperative Agreement Number DE–FC26–03NT41834.

Dorothy B. Fountain,

Deputy Director of Operations, Antitrust Division.

[FR Doc. 04–1160 Filed 1–20–04; 8:45 am]

BILLING CODE 4410–11–M

DEPARTMENT OF JUSTICE

Antitrust Division

Notice Pursuant to the National Cooperative Research and Production Act of 1993—Interchangeable Virtual Instruments Foundation, Inc.

Notice is hereby given that, on December 12, 2003, pursuant to section 6(a) of the National Cooperative Research and Production Act of 1993, 15 U.S.C. 4301 *et seq.* (''the Act''), Interchangeable Virtual Instruments Foundation, Inc. has filed written notifications simultaneously with the Attorney General and the Federal Trade Commission disclosing changes in its membership status. The notifications were filed for the purpose of extending the Act's provisions limiting the recovery of antitrust plaintiffs to actual damages under specified circumstances. Specifically, Easbeacon Test Systems Ltd., Beijing, People's Republic of China has been added as a party to this venture.

No other changes have been made in either the membership or planned activity of the group research project. Membership in this group research project remains open, and Interchangeable Virtual Instruments Foundation, Inc. intends to file additional written notification disclosing all changes in membership.

On May 29, 2001, Interchangeable Virtual Instruments Foundation, Inc. filed its original notification pursuant to section 6(a) of the Act. The Department of Justice published a notice in the **Federal Register** pursuant to section 6(b) of the Act of July 30, 2001 (66 FR 39336).

The last notification was filed with the Department on September 22, 2003. A notice was published in the **Federal**

Register pursuant to section 6(b) of the Act on October 14, 2003 (68 FR 59197).

Dorothy B. Fountain,

Deputy Director of Operations, Antitrust Division.

[FR Doc. 04–1157 Filed 1–20–04; 8:45 am]

BILLING CODE 4410–11–M

DEPARTMENT OF JUSTICE

Antitrust Division

Notice Pursuant to the National Cooperative Research and Production Act of 1993—PXI Systems Alliance, Inc.

Notice is hereby given that, on December 12, 2003, pursuant to section 6(a) of the National Cooperative Research and Production Act of 1993, 15 U.S.C. 4301 *et seq.* (''the Act''), PXI Systems Alliance, Inc. has filed written notifications simultaneously with the Attorney General and the Federal Trade Commission disclosing changes in its membership status. The notifications were filed for the purpose of extending the Act's provisions limiting the recovery of antitrust plaintiffs to actual damages under specified circumstances. Specifically, Conduant Corporation, Longmont, CO; and Strategic Test AB, Akersberga-Stockholm, Sweden have been added as parties to this venture. Also, Acromag, Inc., Wixom, MI; Dolch Computer Systems, Fremont, CA; and Modular Integration Technologies, Boonton, NJ have been dropped as parties to this venture.

No other changes have been made in either the membership or planned activity of the group research project. Membership in this group research project remains open, and PXI Systems Alliance, Inc. intends to file additional written notification disclosing all changes in membership.

On November 22, 2000, PXI Systems Alliance, Inc. filed its original notification pursuant to section 6(a) of the Act. The Department of Justice published a notice in the **Federal Register** pursuant to section 6(b) of the Act on March 8, 2001 (66 FR 13971).

The last notification was filed with the Department on September 22, 2003. A notice was published in the **Federal Register** pursuant to section 6(b) of the Act on October 14, 2003 (68 FR 59198).

Dorothy B. Fountain,

Deputy Director of Operations, Antitrust Division.

[FR Doc. 04–1156 Filed 1–20–04; 8:45 am]

BILLING CODE 4410–11–M

DEPARTMENT OF JUSTICE

Antitrust Division

Notice Pursuant to the National Cooperative Research and Production Act of 1993—Southwest Research Institute (''SwRI''): Fuel/Water Separation Characteristics Program

Notice is hereby given that, on December 17, 2003, pursuant to Section 6(a) of the National Cooperative Research and Production Act of 1993, 15 U.S.C. 4301 *et seq.* (''the Act''), Southwest Research Institute (''SwRI''): Fuel/Water Separation Characteristics Program has filed written notifications simultaneously with the Attorney General and the Federal Trade Commission disclosing changes in its project status and membership. The notifications were filed for the purpose of extending the Act's provisions limiting the recovery of antitrust plaintiffs to actual damages under specified circumstances. Specifically, performance was reinstated and the period was initially extended to October 1, 2003; the period of performance has now been extended to July 1, 2004. In addition, Lydall Filtration/Separation, Inc., Rochester, NH, has become a member.

No other changes have been made in either the membership or planned activity of the group research project. Membership in this group research project remains open, and Southwest Research Institute (''SwRI''): Fuel/Water Separation Characteristics Program intends to file additional written notification disclosing all changes in membership.

On March 10, 2000, Southwest Research Institute (''SwRI''): Fuel/Water Separation Characteristics Program filed its original notification pursuant to Section 6(a) of the Act. The Department of Justice published a notice in the **Federal Register** pursuant to section 6(b) of the Act on November 2, 2000 (65 FR 65882).

The last notification was filed with the Department on June 11, 2001. A notice was published in the **Federal Register** pursuant to section 6(b) of the Act on July 30, 2001 (66 FR 39337).

Dorothy B. Fountain,

Deputy Director of Operations, Antitrust Division.

[FR Doc. 04–1158 Filed 1–20–04; 8:45 am]

BILLING CODE 4410–11–M

DEPARTMENT OF JUSTICE

Antitrust Division

Notice Pursuant to The National Cooperative Research and Production Act of 1993—Investigation of Soot Removal Testing Methods for Automotive Applications

Notice is hereby given that, on December 17, 2003, pursuant to section 6(a) of the National Cooperative Research and Production Act of 1993, 15 U.S.C. 4301 *et seq.* (''the Act''), Southwest Research Institute (''SwRI'') has filed written notifications simultaneously with the Attorney General and the Federal Trade Commission disclosing changes in planned activities and in its membership. The notifications were filed for the purpose of extending the Act's provisions limiting the recovery of antitrust plaintiffs to actual damages under specified circumstances. Specifically, Baldwin Filters, Kearney, NE has withdrawn as a party to this venture, and the period of performance has been extended to December 31, 2003.

No other changes have been made in either the membership or planned activity of the group research project. Membership in this group research project remains open, and Southwest Research Institute (''SwRI'') intends to file additional written notification disclosing all changes in membership.

On September 23, 2002, Southwest Research Institute (''SwRI'') filed its original notification pursuant to section 6(a) of the Act. The Department of Justice published a notice in the **Federal Register** pursuant to section 6(b) of the Act on November 6, 2002 (67 FR 67650).

Dorothy B. Fountain,

Deputy Director of Operations Antitrust Division.

[FR Doc. 04–1159 Filed 1–20–04; 8:45 am]

BILLING CODE 4410–11–M

DEPARTMENT OF LABOR

Employment Standards Administration

Proposed Collection; Comment Request

ACTION: Notice.

SUMMARY: The Department of Labor, as part of its continuing effort to reduce paperwork and respondent burden, conducts a preclearance consultation program to provide the general public and Federal agencies with an opportunity to comment on proposed

and/or continuing collections of information in accordance with the Paperwork Reduction Act of 1995 (PRA95) [44 U.S.C. 3506(c)(2)(A)]. This program helps to ensure that requested data can be provided in the desired format, reporting burden (time and financial resources) is minimized, collection instruments are clearly understood, and the impact of collection requirements on respondents can be properly assessed. Currently, the Employment Standards Administration is soliciting comments concerning the proposed collection: Vehicle Mechanical Inspection Report for Transportation Subject to Department of Transportation Requirements (WH–514); Vehicle Mechanical Inspection Report for Transportation Subject to Department of Labor Safety Standards (WH–514a). A copy of the proposed information collection request can be obtained by contacting the office listed below in the addresses section of this Notice.

DATES: Written comments must be submitted to the office listed in the **ADDRESSES** section below on or before March 22, 2004.

ADDRESSES: Ms. Hazel M. Bell, U.S. Department of Labor, 200 Constitution Ave., NW., Room S–3201, Washington, DC 20210, telephone (202) 693–0418, fax (202) 693–1451, e-mail *bell.hazel@dol.gov*. Please use only one method of transmission for comments (mail, fax, or e-mail).

SUPPLEMENTARY INFORMATION

I. Background

Section 401 of the Migrant and Seasonal Agricultural Worker Protection Act (MSPA) requires that farm labor contractor, agricultural employers, or agricultural associations who use any vehicle to transport a migrant or seasonal agricultural worker, ensure that such vehicle conforms to vehicle State safety standards prescribed by MSPA and other applicable Federal and State safety standards. The use of forms WH–514 and WH–514a enable an applicant to verify to the Department or appropriate State agency that the vehicles used to transport such workers meet these safety standards. The WH–514 is used to verify that Department of Transportation safety standards are set for all vehicles other than passenger automobiles or station wagons, and the WH–514a is used to verify that Department of Labor safety standards are met for all vehicles including passenger automobiles or station wagons. This information collection is currently approved for use through July 31, 2004.

II. Review Focus

The Department of Labor is particularly interested in comments which:

- Evaluate whether the proposed collection of information is necessary for the proper performance of the functions of the agency, including whether the information will have practical utility;
- Evaluate the accuracy of the agency's estimate of the burden of the proposed collection of information, including the validity of the methodology and assumptions used;
- Enhance the quality, utility and clarity of the information to be collected; and
- Minimize the burden of the collection of information on those who are to respond, including through the use of appropriate automated, electronic, mechanical, or other technological collection techniques or other forms of information technology, *e.g.*, permitting electronic submissions of responses.

III. Current Actions

The Department of Labor seeks approval for the extension of this information collection in order to verify that farm labor contractors, agricultural employers, and agricultural associations have complied with the applicable safety standards.

Type of Review: Extension.

Agency: Employment Standards Administration.

Title: Vehicle Mechanical Inspection Report for Transportation Subject to Department of Transportation Requirements (WH–514); Vehicle Mechanical Inspection Report for Transportation Subject to Department of Labor Safety Standards (WH–514a).

OMB Number: 1215–0036.

Agency Number: WH–514 and WH–514a.

Affected Public: Business or other for profit; Farms.

Total Respondents: 1,020.

Total Responses: 3,060.

Average Time per Response: 5 minutes.

Estimated Total Burden Hours: 255.

Frequency: On Occasion.

Total Burden Cost (capital/startup): $0.

Total Burden Cost (operating/maintenance): $140,760.

Comments submitted in response to this notice will be summarized and/or included in the request for Office of Management and Budget approval of the information collection request; they will also become a matter of public record.

Dated: January 14, 2004.

Bruce Bohanon,

Chief, Branch of Management Review and Internal Control, Division of Financial Management, Office of Management, Administration and Planning, Employment Standards Administration.

[FR Doc. 04–1176 Filed 1–20–04; 8:45 am]

BILLING CODE 4510–27–P

MERIT SYSTEMS PROTECTION BOARD

Privacy Act of 1974; Amendment of Privacy Act System of Records

AGENCY: Merit Systems Protection Board.

ACTION: Notice of adding a new system of records.

SUMMARY: The Merit Systems Protection Board (MSPB or the Board) issues public notice that it is adding a system of records subject to the Privacy Act of 1974 (5 U.S.C. 552a), namely MSPB/INTERNAL–4, ''Case Memoranda/Draft Decisions.''

EFFECTIVE DATE: January 14, 2004.

ADDRESSES: Office of the Clerk of the Board, U.S. Merit Systems Protection Board, 1615 M Street, NW., Washington, DC 20419.

FOR FURTHER INFORMATION CONTACT: Timothy L. Korb, Privacy Act Officer, at (202) 653–7200.

SUPPLEMENTARY INFORMATION: By **Federal Register** notice of June 7, 2000 (65 FR 36166), the Board informed the public that it would no longer maintain records in the system known as MSPB/Internal–4 by the name or personal identifier of the record subject. MSPB/Internal–4 contained advisory memoranda from Board attorneys to the Board members regarding appeals pending before the Board. Following this **Federal Register** notice, the Board continued to maintain these memoranda in its computer system, but deleted personal identifiers such as party names and docket numbers once a decision was issued. Recently, however, the Board determined that it would no longer delete these identifiers from the memoranda, which means that these memoranda are once again contained in a system of records subject to the Privacy Act.

Although the case memoranda are again covered by the Privacy Act, the Board does not intend to release them to the public, either under the Freedom of Information Act (FOIA), or under the Privacy Act, because the memoranda fall within statutory exemptions to the general duty to provide requested

records. Case memoranda come within FOIA Exemption 5, which covers ''inter-agency or intra-agency memorandums or letters which would not be available by law to a party other than an agency in litigation with the agency.'' 5 U.S.C. 552(b)(5). Case memoranda also come within Privacy Act Exemption (d)(5), which provides that ''nothing in this section shall allow an individual access to any information compiled in reasonable anticipation of a civil action or proceeding.'' 5 U.S.C. 552a(d)(5).

As required by 5 U.S.C. 552a(e)(4), additional information about MSPB/INTERNAL–4, ''Case Memoranda/Draft Decisions,'' is provided as follows:

MSPB/INTERNAL–4

SYSTEM NAME:

Case Memoranda/Draft Decisions.

SYSTEM LOCATION:

Office of the Clerk of the Board and Office of Information Resources Management, Merit Systems Protection Board (MSPB), 1615 M Street, NW., Washington, DC 20419.

CATEGORIES OF INDIVIDUALS COVERED BY THE SYSTEM:

Current and former Federal employees, applicants for employment, annuitants, and other individuals who have filed petitions or requests for review with MSPB, or have been a party in an original jurisdiction case.

CATEGORIES OF RECORDS IN THE SYSTEM:

These records consist of advisory memoranda and draft decisions prepared by Board attorneys and employees working under the supervision of Board attorneys for the consideration of Board members in connection with appeals pending before the Board. These records contain individual appellants' names, and may contain appellants' veterans status, race, sex, age, religion, national origin, disability status, and other personal information.

AUTHORITY FOR MAINTENANCE OF THE SYSTEM:

5 U.S.C. 1204, 7701, 7702.

PURPOSE(S):

These records are used by the Board members in determining how they will decide the appeals that come before them. These records are also used by Board employees for internal legal research.

ROUTINE USES OF RECORDS MAINTAINED IN THE SYSTEM, INCLUDING CATEGORIES OF USERS AND THE PURPOSE OF SUCH USES:

There are no routine uses or disclosures to persons who are not Board employees.

STORAGE:

These records are maintained in electronic form on file servers connected to the Board's local area network or in the Board's document management system.

RETRIEVABILITY:

These records are retrieved by the names of the individuals on whom they are maintained, and by MSPB docket numbers.

SAFEGUARDS:

Access to these records is limited by password and other system-based procedures to persons whose official duties require such access.

RETENTION AND DISPOSAL:

Electronic records in this system may be maintained indefinitely, or until the Board no longer needs them.

SYSTEM MANAGERS AND ADDRESSES:

The Clerk of the Board and the Office of Information Resources Management, Merit Systems Protection Board, 1615 M Street, NW., Washington, DC 20419.

NOTIFICATION PROCEDURES:

Individuals wishing to inquire whether this system of records contains information about them should contact the Clerk of the Board and must follow the MSPB Privacy Act regulations at 5 CFR part 1205.

RECORD ACCESS PROCEDURES:

Individuals requesting access to their records should contact the Clerk of the Board, Merit Systems Protection Board, 1615 M Street NW., Washington, DC 20419. Requests for access must comply with the MSPB Privacy Act regulations at 5 CFR part 1205.

RECORD SOURCE CATEGORIES:

The sources of these records are Board attorneys and other employees acting under the supervision of Board attorneys.

Dated: January 14, 2004.

Bentley M. Roberts, Jr.,

Clerk of the Board.

[FR Doc. 04–1179 Filed 1–20–04; 8:45 am]

BILLING CODE 7400–01–P

NATIONAL AERONAUTICS AND SPACE ADMINISTRATION

[Notice: (04–006)]

Notice of Information Collection Under OMB Review

AGENCY: National Aeronautics and Space Administration (NASA).

ACTION: Notice of information collection under OMB review.

CORRECTION: Information on this collection originally appeared as notice document 03–144 on page 63820 in the issue of Monday, November 10, 2003, with corrections published as notice document 03–153 on Tuesday, December 2, 2003. This notice reflects a change in the title of the collection, as well as slight revisions to the cost and hour burden information provided in the previous notices. The full collection notice, with revisions, is reproduced here.

SUMMARY: The National Aeronautics and Space Administration (NASA) has submitted the following information collection request to the Office of Management and Budget (OMB) for review and approval in accordance with the procedures of the Paperwork Reduction Act of 1995 (Public Law 104–13, 44 U.S.C. 3506(c)(2)(A)).

DATES: All comments should be submitted within 30 calendar days from the date of this publication.

ADDRESSES: All comments should be addressed to Desk Officer for NASA; Office of Information and Regulatory Affairs; Office of Management and Budget; Room 10236; New Executive Office Building; Washington, DC, 20503.

FOR FURTHER INFORMATION CONTACT: Ms. Nancy Kaplan, NASA Reports Officer, (202) 358–1372.

Title: Effective Messaging Research.

OMB Number: 2700.

Type of review: New collection.

Need and Uses: The analysis of this survey will position NASA to develop a strategy to effectively communicate Agency messages.

Affected Public: Individuals or households; Business or other for-profit; Not-for-profit institutions; Federal Government; State, Local, or Tribal Government.

Number of Respondents: 2,100.

Responses Per Respondent: 1.

Annual Responses: 2,100.

Hours Per Request: 20 minutes.

Annual Burden Hours: 900.

Frequency of Report: Other (one time).

Patricia L. Dunnington,

Chief Information Officer, Office of the Administrator.

[FR Doc. 04–1196 Filed 1–20–04; 8:45 am]

BILLING CODE 7510–13–P

NATIONAL AERONAUTICS AND SPACE ADMINISTRATION

[Notice (04–007)]

U.S. Centennial of Flight Commission.

AGENCY: National Aeronautics and Space Administration.

ACTION: Notice of meeting.

SUMMARY: In accordance with the Federal Advisory Committee Act, Pub. L. 92–463, as amended, the National Aeronautics and Space Administration announces a joint meeting of the U.S. Centennial of Flight Commission and the First Flight Centennial Federal Advisory Board.

DATES: Friday, February 6, 2004, 1 p.m. to 4 p.m.

ADDRESSES: National Aeronautics and Space Administration, 300 E Street, SW., Room 9H40 (PRC), Washington, DC 20546.

FOR FURTHER INFORMATION CONTACT: Ms. Beverly Farmarco, Code IC, National Aeronautics and Space Administration, Washington, DC 20546, 202/358–1903.

SUPPLEMENTARY INFORMATION: The meeting will be open to the public up to the seating capacity of the room. The agenda for the meeting is as follows:

—Opening Remarks
—Roundtable Discussion of the Past Year's Events
—Carter Ryley Thomas Update
—NASA Update
—North Carolina Update
—Experimental Aircraft Association Update
—The Wright Experience Update
—Closing Comments

Attendees will be requested to sign a register and to comply with NASA security requirements, including the presentation of a valid picture ID, before receiving an access badge. Foreign nationals attending this meeting will be required to provide the following information: Full name; gender; date/place of birth; citizenship; visa/green card information (number, type, expiration date); employer/affiliation information (name of institution, address, county, phone); and title/position of attendee. To expedite admittance, attendees can provide identifying information in advance by contacting Ms. Beverly Farmarco via e-mail at *beverly.j.farmarco@nasa.gov* or by telephone at (202) 358–1903. Persons with disabilities who require assistance should indicate this.

It is imperative that the meeting be held on this date to accommodate the scheduling priorities of the key participant.

Michael F. O'Brien,

Assistant Administrator for External Relations, National Aeronautics and Space Administration.

[FR Doc. 04–1229 Filed 1–20–04; 8:45 am]

BILLING CODE 7510–01–P

NATIONAL CREDIT UNION ADMINISTRATION

Notice of Meeting

Time and Date: 10 a.m., Thursday, January 22, 2004.

Place: Board Room, 7th Floor, Room 7047, 1775 Duke Street, Alexandria, VA 22314–3428.

Status: Open.

Matters to be Considered:

1. Quarterly Insurance Fund Report.
2. Request from a Federal Credit Union to Convert to a Community Charter.
3. *Proposed Rule:* Parts 703 and 704 of NCUA's Rules and Regulations, Investment in Exchangeable Collateralized Mortgage Obligations.

FOR FURTHER INFORMATION CONTACT: Becky Baker, Secretary of the Board, Telephone: (703) 518–6304.

Becky Baker,

Secretary of the Board.

[FR Doc. 04–1292 Filed 1–15–04; 4:29 pm]

BILLING CODE 7535–01–M

NATIONAL SCIENCE FOUNDATION

Agency Information Collection Activities: Proposed Revision to Approved Collection OMB 3245–0182; Comment Request

AGENCY: National Science Foundation.

ACTION: Notice.

SUMMARY: The National Science Foundation (NSF) is announcing plans to revise this collection. In accordance with the requirement of section 3506(c)(2)(A) of the Paperwork Reduction Act of 1995, we are providing opportunity for public comment on this action. After obtaining and considering public comment, NSF will prepare the submission requesting OMB clearance of this collection for no longer than 3 years.

Comments are invited on: (a) Whether the proposed collection of information is necessary for the proper performance of the functions of the Agency, including whether the information shall have practical utility; (b) the accuracy of the Agency's estimate of the burden of the proposed collection of information; (c) ways to enhance the quality, utility, and clarity of the information on respondents, including through the use of automated collection techniques or other forms of information technology; and (d) ways to minimize the burden of the collection of information on respondents, including through the use of automated collection techniques or other forms of information technology.

DATES: Written comments should be received by February 20, 2004 to be assured of consideration. Comments received after that date would be considered to the extent practicable.

ADDRESSES: Written comments regarding the information collection and requests for copies of the proposed information collection request should be addressed to Suzanne Plimpton, Reports Clearance Officer, National Science Foundation, 4201 Wilson Blvd., Rm. 295, Arlington, VA 22230, or by e-mail to *splimpto@nsf.gov.*

FOR FURTHER INFORMATION CONTACT: Suzanne Plimpton at (703) 292–7556 or send e-mail to *splimpto@nsf.gov.* Individuals who use a telecommunications device for the deaf (TDD) may call the Federal Information Relay Service (FIRS) at 1–800–877–8339 between 8 a.m. and 8 p.m., Eastern time, Monday through Friday.

SUPPLEMENTARY INFORMATION:

Title of Collection: Evaluation of the Initial Impacts of the Integrative Graduate Education Research and Traineeship Program (IGERT) (formerly called the Cross-Site Analysis of the IGERT Program)

OMB Control No.: 3145–0182.

Expiration Date Of Approval: July 31, 2005.

Abstract: This document has been prepared to support a revision to an OMB-approved data collection used in the evaluation of the Initial Impacts of the Integrative Graduate Education Research and Traineeship Program) (IGERT). Managed by the Directorate for Education and Human Resources' (EHR) Division of Graduate Education (DGE), and crosscutting several NSF research directorates, the IGERT Program has been developed to meet the challenges of educating U.S. Ph.D. scientists, engineers, and educators with the interdisciplinary backgrounds, deep knowledge in chosen disciplines, and technical, professional, and personal skills to become in their own careers the leaders and creative agents for change. The program is intended to catalyze a cultural change in graduate education and to facilitate greater diversity in student participation and preparation.

Monitoring and evaluation of the IGERT Program has been underway since shortly after its inception in 1997, and focuses on the implementation of projects at individual universities. Beginning in 2002, REC funded a multiple-methods study cleared as ''The Cross-Site Analysis of the IGERT program'' (OMB 3154–0182), focused on project implementation and impacts, and consisting of site visits to projects in their third year of implementation. The next step is to ask questions about the impact of IGERT on participants, institutions, and Science, Technology, Engineering, and Mathematics (STEM) fields as compared to the experiences of appropriate comparison groups and/or external respondents. Topics addressed will include the following: What is the added recruitment value of the IGERT project? How do the content and structure of IGERT educational and research experiences differ from those experienced by students in a single-discipline doctoral program? How do IGERT students, faculty, and graduates differ from non-IGERT comparison groups in terms of their productivity, academic skills, ability to work in cross-disciplinary teams, and interest in interdisciplinary research? At their home institutions, have IGERT projects expanded? Do they benefit from institutional financial or policy support beyond that experienced by non-IGERT departments? Have projects resulted in new courses or degree programs? Outside their home institution, how well are IGERT projects known, and what impact is the IGERT program having on STEM fields at large?

A series of surveys and interviews will be employed to answer these questions along with the previously cleared site visits. Internet surveys will be administered to PIs; IGERT department chairs and comparison department chairs; IGERT trainees and comparison department doctoral students; and IGERT and comparison department faculty. Secondly, interviews will be conducted with IGERT institutional administrators and comparison institutional administrators. Finally, e-mail surveys will be developed for graduates of IGERT programs and corresponding comparison graduates; supervisors at IGERT internship sites; and leaders of professional associations and educational agencies (national and international).

The IGERT program consists of multidisciiplinary projects that bring together faculty and students from multiple departments. To form an appropriate comparison group for this program, this study will match the two departments with the largest number of students from each IGERT project with non-IGERT single discipline departments. This approach compares the multidisciplinary graduate education experience with traditional single department graduate education, and uses IGERT as the examplar of the multidisciplinary. The counter-factual provided by this comparison group choice is the single department experience trainees would have had, had they not become IGERT trainees.

Expected respondents: The data for this study will be gathered through surveys and telephone interviews. The expected respondents are:

Surveys:

(1) Current IGERT students and comparison non-IGERT students

(2) Current IGERT faculty and comparison non-IGERT faculty

(3) Current IGERT PIs

(4) IGERT department chairs and comparison non-IGERT department chairs

(5) IGERT graduates and comparison non-IGERT graduates

(6) Representatives of STEM fields

(7) Leaders in STEM fields (heads of associations, renowned researchers * * *)

(8) Supervisors at IGERT student internship sites

Interviews:

(9) Administrators at IGERT and non-IGERT institutions

Burden on the Public: This study's total sample is 3350 individuals, and the total estimated burden for this collection is 980 hours. The average estimated reporting burden is 20 minutes per respondent. The study includes IGERT program participants and a comparison group in close to equal proportions. Because the comparison group members are members of the general public not funded by the program being evaluated, the burden upon the general public is calculated to be 473 hours.

Dated: January 14, 2004.

Suzanne H. Plimpton,

Reports Clearance Officer, National Science Foundation.

[FR Doc. 04–1204 Filed 1–20–04; 8:45 am]

BILLING CODE 7555–01–M

NATIONAL TRANSPORTATION SAFETY BOARD

Sunshine Act Meeting

TIME AND PLACE: 9:30 a.m., Tuesday, January 27, 2004.

PLACE: NTSB Conference Center, 429 L'Enfant Plaza SW., Washington, DC 20594.

STATUS: The two items are open to the public.

MATTERS TO BE CONSIDERED:

7610—Highway Accident Report—School Bus Run-off-Bridge Accident, Omaha, Nebraska, October 13, 2001.

7470C—Opinion and Order: Administrator v. Donnelly, Docket SE–16222; Disposition of Respondent's and the Administrator's Petitions for Reconsideration.

NEWS MEDIA CONTACT: Telephone: (202) 314–6100.

Individuals requesting specific accommodations should contact Ms. Carolyn Dargan at (202) 314–6305 by Friday, January 23, 2004.

FOR FURTHER INFORMATION CONTACT: Vicky D'Onofrio, (202) 314–6410.

Dated: January 16, 2004.

Vicky D'Onofrio,

Federal Register Liaison Officer.

[FR Doc. 04–1340 Filed 1–16–04; 1:00 pm]

BILLING CODE 7533–01–M

NATIONAL WOMEN'S BUSINESS COUNCIL

Sunshine Act; Notice of Public Meeting

In accordance with the Women's Business Ownership Act, Public Law 106–554 as amended, the National Women's Business Council (NWBC) would like to announce a forthcoming Council meeting. The meeting will introduce the National Women's Business Council's agenda and action items for fiscal year 2003 included by not limited to procurement, access to capital, access to training and technical assistance, access to markets and affordable health care.

DATES: January 29, 2004.

ADDRESSES: The Senate Committee on Small Business and Entrepreneurship Hearing Room, 428A Russell Senate Office Building, Washington, DC.

Time: 10 a.m. to 3 p.m.

Status: Open to the public. Attendance by RSVP only.

FOR FURTHER INFORMATION CONTACT: National Women's Business Council, (202) 205–6695—Katherine Stanley.

Anyone wishing to attend and make an oral presentation at the meeting must contact Katherine Stanley, no later than Monday, January 26, 2004 at (202) 205–6695.

Matthew Becker,

Director of Advisory Councils.

[FR Doc. 04–1394 Filed 1–16–04; 3:25 pm]

BILLING CODE 6820–AB–P

NUCLEAR REGULATORY COMMISSION

Advisory Committee on Reactor Safeguards

Subcommittee Meeting on Planning and Procedures; Notice of Meeting

The ACRS Subcommittee on Planning and Procedures will hold a meeting on February 4, 2004, Room T–2B1, 11545 Rockville Pike, Rockville, Maryland.

The entire meeting will be open to public attendance, with the exception of a portion that may be closed pursuant to 5 U.S.C. 552b(c)(2) and (6) to discuss organizational and personnel matters that relate solely to internal personnel rules and practices of ACRS, and information the release of which would constitute a clearly unwarranted invasion of personal privacy.

The agenda for the subject meeting shall be as follows:

Wednesday, February 4, 2004—12 Noon–1:30 P.M.

The Subcommittee will discuss proposed ACRS activities and related matters. The Subcommittee will gather information, analyze relevant issues and facts, and formulate proposed positions and actions, as appropriate, for deliberation by the full Committee.

Members of the public desiring to provide oral statements and/or written comments should notify the Designated Federal Official, Mr. Sam Duraiswamy (telephone: 301–415–7364) between 7:30 a.m. and 4:15 p.m. (ET) five days prior to the meeting, if possible, so that appropriate arrangements can be made. Electronic recordings will be permitted only during those portions of the meeting that are open to the public.

Further information regarding this meeting can be obtained by contacting the Designated Federal Official between 7:30 a.m. and 4:15 p.m. (ET). Persons planning to attend this meeting are urged to contact the above named individual at least two working days prior to the meeting to be advised of any potential changes in the agenda.

Dated: January 13, 2004.

Sher Bahadur,

Associate Director for Technical Support, ACRS/ACNW.

[FR Doc. 04–1173 Filed 1–20–04; 8:45 am]

BILLING CODE 7590–01–P

NUCLEAR REGULATORY COMMISSION

Advisory Committee on Reactor Safeguards; Meeting Notice

In accordance with the purposes of sections 29 and 182b. of the Atomic Energy Act (42 U.S.C. 2039, 2232b), the Advisory Committee on Reactor Safeguards (ACRS) will hold a meeting on February 5–7, 2004, 11545 Rockville Pike, Rockville, Maryland. The date of this meeting was previously published in the **Federal Register** on Monday, November 21, 2003 (68 FR 65743).

Thursday, February 5, 2004, Conference Room T–2B3, Two White Flint North, Rockville, Maryland

8:30 a.m.–8:35 a.m.: Opening Remarks by the ACRS Chairman (Open)—The ACRS Chairman will make opening remarks regarding the conduct of the meeting.

8:35 a.m.–10:30 a.m.: ESBWR Design—Thermal-Hydraulic Issues (Open/Closed)—The Committee will hear presentations by and hold discussions with representatives of the NRC staff on the use of the TRAC–G computer code to perform analyses of the Economic Simplified Boiling Water Reactor (ESBWR) design.

Note: A portion of this session may be closed to discuss General Electric proprietary information applicable to this matter.

10:45 a.m.–11:45 a.m.: South Texas Project Cause Investigation of the Reactor Vessel Bottom Mounted Penetration Leakage (Open)—The Committee will hear presentations by and hold discussions with representatives of the NRC staff regarding the South Texas Project investigation of the cause of the leakage from reactor vessel bottom mounted penetration.

12:45 p.m.–2:45 p.m.: Resolution of Certain Items Identified by the ACRS in NUREG–1740 Related to the Differing Professional Opinion (DPO) on Steam Generator Tube Integrity (Open)—The Committee will hear presentations by and hold discussions with representatives of the NRC staff regarding the staff's resolution of certain items identified by the ACRS in NUREG–1740, ''Voltage-Based Alternative Repair Criteria,'' related to the DPO on steam generator tube integrity, as well as the status of resolution of the remaining items.

3 p.m.–4 p.m.: Evaluation of the Effectiveness (Quality) of the NRC Safety Research Programs (Open)—The Committee will discuss a proposed approach for the ACRS evaluation of the effectiveness (quality) of the NRC Safety Research Programs.

4 p.m.–7 p.m.: Preparation of ACRS Reports (Open)—The Committee will discuss proposed ACRS reports on matters considered during this meeting as well as a proposed report on the NRC Safety Research Program.

Friday, February 6, 2004, Conference Room T–2B3, Two White Flint North, Rockville, Maryland

8:30 a.m.–8:35 a.m.: Opening Remarks by the ACRS Chairman (Open)—The ACRS Chairman will make opening remarks regarding the conduct of the meeting.

8:35 a.m.–12:30 p.m.: ACRS Report on the NRC Safety Research Program (Open)—The Committee will discuss the draft ACRS report to the Commission on the NRC Safety Research Program.

1:30 p.m.–2 p.m.: Subcommittee Report—ACR–700 Design (Open)—The Committee will hear a report by and discussions with the Chairman of the ACRS Subcommittee on Future Plant Designs regarding the Subcommittee's review of the design features of the ACR–700 design and related matters.

2 p.m.–3 p.m.: Future ACRS Activities/Report of the Planning and Procedures Subcommittee (Open)—The Committee will discuss the recommendations of the Planning and Procedures Subcommittee regarding items proposed for consideration by the full Committee during future meetings. Also, it will hear a report of the Planning and Procedures Subcommittee on matters related to the conduct of ACRS business, including anticipated workload and member assignments.

3 p.m.–3:15 p.m.: Reconciliation of ACRS Comments and Recommendations (Open)—The Committee will discuss the responses from the NRC Executive Director for Operations (EDO) to comments and recommendations included in recent ACRS reports and letters. The EDO responses are expected to be made available to the Committee prior to the meeting.

3:30 p.m.–7 p.m.: Preparation of ACRS Reports (Open)—The Committee will discuss proposed ACRS reports on matters considered during this meeting.

Saturday, February 7, 2004, Conference Room T–2B3, Two White Flint North, Rockville, Maryland

8:30 a.m.–12 Noon: Preparation of ACRS Reports (Open)—The Committee will discuss proposed ACRS reports on matters considered during this meeting.

12 Noon–12:30 p.m.: Miscellaneous (Open)—The Committee will discuss

matters related to the conduct of Committee activities and matters and specific issues that were not completed during previous meetings, as time and availability of information permit.

Procedures for the conduct of and participation in ACRS meetings were published in the **Federal Register** on October 16, 2003 (68 FR 59644). In accordance with those procedures, oral or written views may be presented by members of the public, including representatives of the nuclear industry. Electronic recordings will be permitted only during the open portions of the meeting. Persons desiring to make oral statements should notify the Associate Director for Technical Support named below five days before the meeting, if possible, so that appropriate arrangements can be made to allow necessary time during the meeting for such statements. Use of still, motion picture, and television cameras during the meeting may be limited to selected portions of the meeting as determined by the Chairman. Information regarding the time to be set aside for this purpose may be obtained by contacting the Associate Director for Technical Support prior to the meeting. In view of the possibility that the schedule for ACRS meetings may be adjusted by the Chairman as necessary to facilitate the conduct of the meeting, persons planning to attend should check with the Associate Director for Technical Support if such rescheduling would result in major inconvenience.

In accordance with subsection 10(d) Public Law 92–463, I have determined that it is necessary to close a portion of this meeting noted above to discuss General Electric proprietary information pursuant to 5 U.S.C. 552b(c)(4).

Further information regarding topics to be discussed, whether the meeting has been canceled or rescheduled, as well as the Chairman's ruling on requests for the opportunity to present oral statements and the time allotted therefor can be obtained by contacting Dr. Sher Bahadur, Associate Director for Technical Support (301–415–0138), between 7:30 a.m. and 4:15 p.m., e.t.

ACRS meeting agenda, meeting transcripts, and letter reports are available through the NRC Public Document Room at *pdr@nrc.gov*, or by calling the PDR at 1–800–397–4209, or from the Publicly Available Records System (PARS) component of NRC's document system (ADAMS) which is accessible from the NRC Web site at *http://www.nrc.gov/reading-rm/adams.html* or *http://www.nrc.gov/reading-rm/doc-collections/* (ACRS & ACNW Mtg schedules/agendas).

Videoteleconferencing service is available for observing open sessions of ACRS meetings. Those wishing to use this service for observing ACRS meetings should contact Mr. Theron Brown, ACRS Audio Visual Technician (301–415–8066), between 7:30 a.m. and 3:45 p.m., e.t., at least 10 days before the meeting to ensure the availability of this service. Individuals or organizations requesting this service will be responsible for telephone line charges and for providing the equipment and facilities that they use to establish the videoteleconferencing link. The availability of videoteleconferencing services is not guaranteed.

Dated: January 14, 2004.

Annette Vietti-Cook,

Secretary of the Commission.

[FR Doc. 04–1174 Filed 1–20–04; 8:45 am]

BILLING CODE 7590–01–P

NUCLEAR REGULATORY COMMISSION

Sunshine Act Meeting

AGENCY HOLDING THE MEETING: Nuclear Regulatory Commission.

DATE: Weeks of January 19, 26; February 2, 9, 16, 23, 2004.

PLACE: Commissioners' Conference Room, 11555 Rockville Pike, Rockville, Maryland.

STATUS: Public and Closed.

MATTERS TO BE CONSIDERED:

Week of January 19, 2004

Wednesday, January 21, 2004

1:30 p.m.—Discussion of Security Issues (Closed—Ex. 1)

Friday, January 23, 2004

1:30 p.m.—Meeting with FERC to Discuss Security Issues (closed—Ex. 1)

Week of January 26, 2004—Tentative

There are no meetings scheduled for the Week of January 26, 2004.

Week of February 2, 2004—Tentative

There are no meetings scheduled for the Week of February 2, 2004.

Week of February 9, 2004—Tentative

There are no meetings scheduled for the Week of February 9, 2004.

Week of February 16, 2004—Tentative

Wednesday, February 18, 2004

9:30 a.m.—Briefing on Status of Office of Chief Financial Officer Programs, Performance, and Plans (Public Meeting) (Contact: Edward L. New, 301–415–5646)

This meeting will be webcast live at the Web address—*www.nrc.gov.*

Week of February 23, 2004—Tentative

Tuesday, February 24, 2004

9:30 a.m.—Meeting with UK Regulators to Discuss Security Issues (Closed—Ex. 1)

Wednesday, February 25, 2004

9:30 a.m.—Discussion of Security Issues (Closed—Ex. 1)

* The schedule for Commission meetings is subject to change on short notice. To verify the status of meetings call (recording)—(301) 415–1292. Contact person for more information: Timothy J. Frye, (301) 415–1651.

* * * * *

Additional Information: By a vote of 3–0 on January 13, the Commission determined pursuant to U.S.C. 552b(e) and § 9.107(a) of the Commission's rules that ''Affirmation of SECY–03–0225 (Sequoyah Fuels Corp; Cherokee Nation's Petition for Review of LBP–03–24)'' be held on January 14, and on less than one week's notice to the public.

* * * * *

The NRC Commission Meeting Schedule can be found on the Internet at: *www.nrc.gov/what-we-do/policy-making/schedule.html.*

* * * * *

This notice is distributed by mail to several hundred subscribers; if you no longer wish to receive it, or would like to be added to the distribution, please contact the Office of the Secretary, Washington, DC 20555 (301–415–1969). In addition, distribution of this meeting notice over the Internet system is available. If you are interested in receiving this Commission meeting schedule electronically, please send an electronic message to *dkw@nrc.gov.*

Dated: January 15, 2004.

Timothy J. Frye,

Technical Coordinator, Office of the Secretary.

[FR Doc. 04–1317 Filed 1–16–04; 11:17 am]

BILLING CODE 7590–01–M

OVERSEAS PRIVATE INVESTMENT CORPORATION

Sunshine Act; January 29, 2004 Board of Directors Meeting

TIME AND DATE: Thursday, January 29, 2004, 1:30 p.m. (Open Portion), 1:45 p.m. (Closed Portion).

PLACE: Offices of the Corporation, Twelfth Floor Board Room, 1100 New York Avenue, NW., Washington, DC.

STATUS: Meeting OPEN to the Public from 1:30 p.m. to 1:45 p.m., Closed

portion will commence at 1:45 p.m. (approx.).

MATTERS TO BE CONSIDERED:

1. President's Report.
2. Approval of October 30, 2003 Minutes (Open Portion).
3. Approval of the January 6, 2004 Minutes (Open Portion).

FURTHER MATTERS TO BE CONSIDERED: (Closed to the Public 1:45 p.m.).

1. Finance Project—Caribbean and Central America.
2. Finance Project—Latin America.
3. Finance Project—Latin America.
4. Insurance Project—Gaza.
5. Approval of October 30, 2003 Minutes (Closed Portion).
6. Approval of January 6, 2004 Minutes (Closed Portion).
8. Pending Major Projects.
9. Reports.

FOR FURTHER INFORMATION CONTACT: Information on the meeting may be obtained from Connie M. Downs at (202) 336–8438.

Dated: January 16, 2004.

Connie M. Downs,

Corporate Secretary, Overseas Private Investment Corporation.

[FR Doc. 04–1300 Filed 1–16–04; 9:50 am]

BILLING CODE 3210–01–M

OFFICE OF PERSONNEL MANAGEMENT

Excepted Service

AGENCY: Office of Personnel Management.

ACTION: Notice.

SUMMARY: This gives notice of OPM decisions granting authority to make appointments under Schedules A, B and C in the excepted service as required by 5 CFR 6.6 and 213.103.

FOR FURTHER INFORMATION CONTACT: Deborah Grade, Director, Washington Services Branch, Center for Talent Services, Division for Human Resources Products and Services. (202) 606–5027.

SUPPLEMENTARY INFORMATION: Appearing in the listing below are the individual authorities established under Schedule C between November 1, 2003 and November 30, 2003. Future notices will be published on the fourth Tuesday of each month, or as soon as possible thereafter. A consolidated listing of all authorities as of June 30 is published each year.

Schedule A

No Schedule A appointments for November 2003.

Schedule B

No Schedule B appointments for November 2003.

Schedule C

The following Schedule C appointments were approved for November:

Section 213.3303 Executive Office of the President, Office of Management and Budget

BOGS60021 Press Secretary to the Deputy Director for Management. Effective November 24, 2003.

BOGS60011 Special Assistant to the Administrator, Office of Information and Regulatory Affairs. Effective November 25, 2003.

Section 213.3304 Department of State

DSGS60708 Senior Advisor to the Representative to the United Nations. Effective November 05, 2003.

DSGS60715 Special Assistant to the Under Secretary for Arms Control and Security Affairs. Effective November 05, 2003.

DSGS60707 Executive Director to the Under Secretary for Arms Control and Security Affairs. Effective November 07, 2003.

DSGS60710 Special Assistant to the Under Secretary for Global Affairs. Effective November 13, 2003.

DSGS60711 Staff Assistant to the Deputy Ambassador-at-Large for War Crimes. Effective November 13, 2003.

DSGS60716 Legislative Management Officer to the Assistant Legal Adviser for African Affairs. Effective November 13, 2003.

DSGS60709 Staff Assistant to the Chief Financial Officer. Effective November 18, 2003.

DSGS60719 Senior Advisor to the Comptroller. Effective November 19, 2003.

Section 213.3305 Department of the Treasury

DYGS00436 Public Affairs Specialist to the Deputy Assistant Secretary (Public Affairs). Effective November 21, 2003.

Section 213.3306 Department of Defense

DDGS16774 Speechwriter to the Special Advisor to the Deputy Secretary of Defense for Communications Strategy. Effective November 10, 2003.

DDGS16694 Special Assistant to the Principal Deputy Assistant Secretary of Defense (Legal Affairs). Effective November 14, 2003.

DDGS00771 Staff Assistant to the Principal Deputy Assistant Secretary of Defense (International Security Affairs). Effective November 21, 2003.

DDGS00772 Staff Assistant to the Principal Deputy Assistant Secretary of Defense (International Security Affairs). Effective November 21, 2003.

DDGS00778 Staff Assistant to the Deputy Assistant Secretary of Defense (Negotiations Policy). Effective November 21, 2003.

DDGS00779 Staff Assistant to the Principal Deputy Assistant Secretary of Defense (International Security Affairs). Effective November 21, 2003.

DDGS16777 Defense Fellow to the Director of Administration and Management/Director of Washington Headquarters Service. Effective November 21, 2003.

Section 213.3310 Department of Justice

DJGS00041 Special Assistant to the Director, Office of Public Affairs. Effective November 05, 2003.

DJGS60233 Counsel to the Assistant Attorney General, Civil Division. Effective November 05, 2003.

Section 213.3311 Department of Homeland Security

DMGS00152 Special Projects Coordinator to the Director of Special Projects. Effective November 05, 2003.

DMGS00153 Staff Assistant to the Chief of Staff. Effective November 13, 2003.

Section 213.3313 Department of Agriculture

DAGS00201 Director, Intergovernmental Affairs to the Assistant Secretary for Congressional Relations. Effective November 04, 2003.

DAGS00193 Special Assistant to the Under Secretary for Marketing and Regulatory Programs. Effective November 21, 2003.

Section 213.3314 Department of Commerce

DCGS00200 Legislative Affairs Specialist to the Deputy Secretary. Effective November 05, 2003.

DCGS00278 Special Assistant to the Assistant Secretary for Export Administration. Effective November 05, 2003.

DCGS00675 Special Assistant to the Assistant Secretary for Market Access and Compliance. Effective November 14, 2003.

DCGS00629 Deputy Director of Public Affairs to the Director of Public Affairs. Effective November 18, 2003.

DCGS00680 Deputy Press Secretary to the Director of Public Affairs. Effective November 18, 2003.

DCGS00571 Senior Policy Advisor to the Deputy Assistant Secretary for Service Industries, Tourism. Effective November 21, 2003.
DCGS00420 Special Assistant to the Deputy Assistant Secretary for Export Promotion Services. Effective November 24, 2003.
DCGS00558 Confidential Assistant to the Chief of Staff. Effective November 24, 2003.
DCGS00609 Confidential Assistant to the Chief of Staff. Effective November 24, 2003.
DCGS00628 Confidential Assistant to the Deputy Assistant Secretary for Export Promotion Services. Effective November 24, 2003.

Section 213.3315 Department of Labor

DLGS60003 Special Assistant to the Secretary of Labor. Effective November 13, 2003.
DLGS60116 Special Assistant to the Chief Financial Officer. Effective November 13, 2003.
DLGS60149 Special Assistant to the Director of the Women's Bureau. Effective November 13, 2003.
DLGS60247 Intergovernmental Assistant to the Assistant Secretary for Congressional and Intergovernmental Affairs. Effective November 13, 2003.
DLGS60174 Staff Assistant to the Secretary of Labor. Effective November 21, 2003.
DLGS60182 Staff Assistant to the Deputy Secretary of Labor. Effective November 21, 2003.
DLGS60220 Special Assistant to the Assistant Secretary for Public Affairs. Effective November 25, 2003.

Section 213.3317 Department of Education

DBGS00300 Confidential Assistant to the Chief of Staff. Effective November 04, 2003.
DBGS00299 Special Assistant to the Assistant Secretary for Elementary and Secondary Education. Effective November 07, 2003.

Section 213.3331 Department of Energy

DEGS00382 Senior Policy Advisor to the Assistant Secretary of Energy (Environmental Management). Effective November 05, 2003.
DEGS00386 Director, Press Office to the Director, Public Affairs. Effective November 21, 2003.

Section 213.3332 Small Business Administration

SBGS60174 Regional Administrator to the Associate Administrator for Field Operations. Effective November 19, 2003.

Section 213.3351 Federal Mine Safety and Health Review Commission

FRGS90501 Attorney Advisor (General) to the Chairman. Effective November 04, 2003.
FRGS90504 Attorney Advisor (General) to a Member. Effective November 04, 2003.

Section 213.3382 National Endowment for the Arts

NAGS00051 National Initiatives Program Manager to the Senior Deputy Chairman. Effective November 05, 2003.

Section 213.3394 Department of Transportation

DTGS60365 Special Assistant to the Assistant Secretary for Transportation Policy. Effective November 10, 2003.
DTGS60237 Special Assistant to the Director of Public Affairs. Effective November 13, 2003.
DTGS60268 Speechwriter to the Associate Director for Speechwriting. Effective November 13, 2003.

Authority: 5 U.S.C. 3301 and 3302; E.O. 10577, 3 CFR 1954–1958 Comp., p. 218

Office of Personnel Management.

Kay Coles James,

Director.

[FR Doc. 04–1175 Filed 1–20–04; 8:45 am]

BILLING CODE 6325–38–P

SECURITIES AND EXCHANGE COMMISSION

[Release No. 34–49060; File No. SR–NASD–2003–172]

Self-Regulatory Organizations; Notice of Filing and Immediate Effectiveness of Proposed Rule Change and Amendment Nos. 1, 2, 3, and 4 Thereto by the National Association of Securities Dealers, Inc. Relating to Certain Technical and Clarifying Changes to NASD Rules 4200, 4200A, 4350, and 4350A

January 12, 2004.

Pursuant to section 19(b)(1) of the Securities Exchange Act of 1934 (''Act'')[1] and Rule 19b–4 thereunder,[2] notice is hereby given that on November 25, 2003, the National Association of Securities Dealers, Inc. (''NASD''), through its subsidiary, The Nasdaq Stock Market, Inc. (''Nasdaq''), filed with the Securities and Exchange Commission (''Commission'') the proposed rule change as described in Items I, II, and III below, which Items have been prepared by Nasdaq. On December 18, 2003, December 23, 2003, December 29, 2003, and January 9, 2004, Nasdaq submitted Amendment Nos. 1, 2, 3, and 4, respectively, to the proposed rule change.[3] Nasdaq has filed the proposed rule change as a ''non-controversial'' rule change under Rule 19b–4(f)(6) under the Act,[4] which renders the proposal effective upon filing with the Commission. The Commission is publishing this notice to solicit comments on the proposed rule change from interested persons.

I. Self-Regulatory Organization's Statement of the Terms of Substance of the Proposed Rule Change

The NASD through Nasdaq is proposing changes to NASD Rules 4200, 4200A, 4350, and 4350A to make certain technical and clarifying amendments to these rules, including, for example, inserting the date of Commission approval, correcting errors in numbering of sections, and clarifying the deadline for disclosure of waivers of a company's code of conduct. Below is the text of the proposed rule change. Proposed new language is in *italics*; proposed deletions are in brackets.

* * * * *

Rule 4200 Definitions

* * * * *

IM—4200 Definition of Independence—Rule 4200(a)(15)

It is important for investors to have confidence that individuals serving as independent directors do not have a relationship with the listed company that would impair their independence. The board has a responsibility to make an affirmative determination that no such relationships exist through the application of Rule 4200. Rule 4200 also provides a list of certain relationships that preclude a board finding of

[1] 15 U.S.C. 78s(b)(1).

[2] 17 CFR 240.19b–4.

[3] *See* letters from Eleni Constantine, Associate General Counsel, Nasdaq, to Katherine A. England, Assistant Director, Division of Market Regulation (''Division''), Commission, dated December 17, 2003 (''Amendment No. 1''), December 22, 2003 (''Amendment No. 2''), and December 22, 2003 (''Amendment No. 3''), and letter from John D. Nachmann, Senior Attorney, Nasdaq, to Katherine A. England, Assistant Director, Division, Commission, dated January 8, 2004 (''Amendment No. 4''). Amendment No. 1 made technical corrections to the original submission. Amendment No. 2 included references to section 19(b)(3)(A) of the Act that had been omitted in the original filing and made a minor clarification. Amendment No. 3 restored Nasdaq's request, made in the original filing, for acceleration of the operative date of the proposed rule change. Amendment No. 4 deleted references to the manner in which foreign issuers must disclose any waivers of the issuer's code of conduct. Nasdaq noted its intention to file a proposed rule change that addresses this issue in the near future. The changes made by Amendment Nos. 1, 2, 3, and 4 are incorporated in this notice.

[4] 17 CFR 240.19b–4(f)(6).

independence. These objective measures provide transparency to investors and companies, facilitate uniform application of the rules, and ease administration. Because Nasdaq does not believe that ownership of company stock by itself would preclude a board finding of independence, it is not included in the aforementioned objective factors. It should be noted that there are additional, more stringent requirements that apply to directors serving on audit committees, as specified in Rule 4350.

The rule's reference to a ''parent or subsidiary'' is intended to cover entities the issuer controls and consolidates with the issuer's financial statements as filed with the U.S. Securities and Exchange Commission (but not if the issuer reflects such entity solely as an investment in its financial statements). The reference to executive officer means those officers covered in Rule 16a-1(f) under the Act. In the context of the definition of Family Member under Rule 4200(a)(14), the reference to marriage is intended to capture relationships specified in the rule (parents, children and siblings) that arise as a result of marriage, such as ''in-law'' relationships.

The three year look-back periods referenced in paragraphs (A), (C), (E) and (F) of the rule commence on the date the relationship ceases. For example, a director employed by the company is not independent until three years after such employment terminates. Paragraph (B) of the rule is generally intended to capture situations where a payment is made directly to (or for the benefit of) the director or a family member of the director. For example, consulting or personal service contracts with a director or family member of the director or political contributions to the campaign of a director or a family member of the director would be considered under paragraph (B) of the rule.

Paragraph (D) of the rule is generally intended to capture payments to an entity with which the director or Family Member of the director is affiliated by serving as a partner, controlling shareholder or executive officer of such entity. Under exceptional circumstances, such as where a director has direct, significant business holdings, it may be appropriate to apply the corporate measurements in paragraph (D), rather than the individual measurements of paragraph (B). Issuers should contact Nasdaq if they wish to apply the rule in this manner. The reference to a partner in paragraph (D) is not intended to include limited partners. It should be noted that the independence requirements of paragraph (D) of the rule are broader than Rule 10A–3(e)(8) under the Act.

Under paragraph (D), a director who is, or who has a Family Member who is, an executive officer of a charitable organization may not be considered independent if the company makes payments to the charity in excess of the greater of [the greater of] 5% of the charity's revenues or $200,000. However, Nasdaq encourages companies to consider other situations where a director or their Family Member and the company each have a relationship with the same charity when assessing director independence.

For purposes of determining whether a lawyer is eligible to serve on an audit committee, Rule 10A–3 under the Act generally provides that any partner in a law firm that receives payments from the issuer is ineligible to serve on that issuer's audit committee. In determining whether a director may be considered independent for purposes other than the audit committee, payments to a law firm would generally be considered under Rule 4200(a)(15)(D), which looks to whether the payment exceeds the greater of 5% of the recipient's gross revenues or $200,000; however, if the firm is a sole proprietorship, Rule 4200(a)(15)(B), which looks to whether the payment exceeds $60,000, applies.

Paragraph (G) of the rule provides a different measurement for independence for investment companies in order to harmonize with the Investment Company Act of 1940. In particular, in lieu of paragraphs (A)–(F), a director who is an ''interested person'' of the company as defined in section 2(a)(19) of the Investment Company Act of 1940, other than in his or her capacity as a member of the board of directors or any board committee, would not be considered to be independent.

Rule 4200A. Definitions

* * * * *

(a) For purposes of the Rule 4000 Series, unless the context requires otherwise:

(14) No change.

Rule 4350. Qualitative Listing Requirements for Nasdaq National Market and Nasdaq SmallCap Market Issuers Except for Limited Partnerships

(a) Applicability

(1) through (4) No change.

(5) Effective Dates/Transition. In order to allow companies to make necessary adjustments in the course of their regular annual meeting schedule, and consistent with Exchange Act Rule 10A–3, Rules *4200* [4300] and 4350 are effective as set out in this subsection. During the transition period between [[insert date of approval by the Commission]] *November 4, 2003* and the effective date of Rules 4200 and 4350, companies that have not brought themselves into compliance with these rules must continue to comply with Rules 4200A and 4350A, which consist of sunsetting sections of previously existing Rules 4200 and 4350.

The provisions of Rule 4200(a) and Rule 4350(c), (d) and (m) regarding director independence, independent committees, and notification of noncompliance shall be implemented by the following dates:

- July 31, 2005 for foreign private issuers and small business issuers (as defined in Rule 12b–2); and
- For all other listed issuers, by the earlier of: (1) the listed issuer's first annual shareholders meeting after January 15, 2004; or (2) October 31, 2004.

In the case of an issuer with a staggered board, with the exception of the audit committee requirements, the issuer shall have until their second annual meeting after January 15, 2004, but not later than December 31, 2005, to implement all new requirements relating to board composition, if the issuer would be required to change a director who would not normally stand for election at an earlier annual meeting. Such issuers shall comply with the audit committee requirements pursuant to the implementation schedule bulleted above.

Issuers that have listed or shall be listed in conjunction with their initial public offering shall be afforded exemptions from all board composition requirements consistent with the exemptions afforded in Rule 10A–3(b)(1)(iv)(A) under the Act. That is, for each committee that the company adopts, the company shall have one independent member at the time of listing, a majority of independent members within 90 days of listing and all independent members within one year. It should be noted, however, that investment companies are not afforded these exemptions under Rule 10A–3. Issuers may choose not to adopt a compensation or nomination committee and may instead rely upon a majority of the independent directors to discharge responsibilities under the rules. These issuers shall be required to meet the majority independent board requirement within one year of listing.

Companies transferring from other markets with a substantially similar requirement shall be afforded the balance of any grace period afforded by the other market. Companies

transferring from other listed markets that do not have a substantially similar requirement shall be afforded one year from the date of listing on Nasdaq. This transition period is not intended to supplant any applicable requirements of Rule 10A–3 under the Act.

The limitations on corporate governance exemptions to foreign private issuers shall be effective July 31, 2005. However, the requirement that a foreign issuer disclose the receipt of a corporate governance exemption from Nasdaq shall be effective for new listings and filings made after January 1, 2004.

Rule 4350(n), requiring issuers to adopt a code of conduct, shall be effective [[insert date six months after approval by the Commission]]*May 4, 2003.*

Rule 4350(h), requiring audit committee approval of related party transactions, shall be effective January 15, 2004.

The remainder of Rule 4350(a) and Rule 4350(b) are effective [[insert date of approval by the Commission]] *November 4, 2003.*

(b) through (l) No change.

(m) *Notification of Material Noncompliance*

An issuer must provide Nasdaq with prompt notification after an executive officer of the corporation becomes aware of any material noncompliance by the issuer with the requirements of this Rule 4350.

(n) *Code of Conduct*

Each issuer shall adopt a code of conduct applicable to all directors, officers and employees, which shall be publicly available. A code of conduct satisfying this rule must comply with the definition of a ''code of ethics'' set out in section 406(c) of the Sarbanes-Oxley Act of 2002 (''the Sarbanes-Oxley Act'') and any regulations promulgated thereunder by the Commission. See 17 CFR 228.406 and 17 CFR 229.406. In addition, the code must provide for an enforcement mechanism. Any waivers of the code for directors or executive officers must be approved by the Board. *Domestic issuers shall disclose* [and must be disclosed] *such waivers* in a Form 8–K within five *business* days.

IM–4350–1 to IM–4350–5

No change.

IM–4350–6: *Applicability*

No change.

IM–4350–7: *Code of Conduct*

Ethical behavior is required and expected of every corporate director, officer and employee whether or not a formal code of conduct exists. The requirement of a publicly available code of conduct applicable to all directors, officers and employees of an issuer is intended to demonstrate to investors that the board and management of Nasdaq issuers have carefully considered the requirement of ethical dealing and have put in place a system to ensure that they become aware of and take prompt action against any questionable behavior. For company personnel, a code of conduct with enforcement provisions provides assurance that reporting of questionable behavior is protected and encouraged, and fosters an atmosphere of self-awareness and prudent conduct.

Rule 4350[(m)]*(n)* requires issuers to adopt a code of conduct complying with the definition of a ''code of ethics'' under section 406(c) of the Sarbanes-Oxley Act of 2002 (''the Sarbanes-Oxley Act'') and any regulations promulgated thereunder by the Commission. See 17 CFR 228.406 and 17 CFR 229.406. Thus, the code must include such standards as are reasonably necessary to promote the ethical handling of conflicts of interest, full and fair disclosure, and compliance with laws, rules and regulations, as specified by the Sarbanes-Oxley Act. However, the code of conduct required by Rule 4350[(m)]*(n)* must apply to all directors, officers, and employees. Issuers can satisfy this obligation by adopting one or more codes of conduct, such that all directors, officers and employees are subject to a code that satisfies the definition of a ''code of ethics.''

As the Sarbanes-Oxley Act recognizes, investors are harmed when the real or perceived private interest of a director, officer or employee is in conflict with the interests of the company, as when the individual receives improper personal benefits as a result of his or her position with the company, or when the individual has other duties, responsibilities or obligations that run counter to his or her duty to the company. Also, the disclosures an issuer makes to the Commission are the essential source of information about the company for regulators and investors—there can be no question about the duty to make them fairly, accurately and timely. Finally, illegal action must be dealt with swiftly and the violators reported to the appropriate authorities. Each code of conduct must require that any waiver of the code for executive officers or directors may be made only by the board and must be promptly disclosed to shareholders, along with the reasons for the waiver. This disclosure requirement provides investors the comfort that waivers are not granted except where they are truly necessary and warranted, and that they are limited and qualified so as to protect the company to the greatest extent possible. Consistent with applicable law, *domestic issuers must disclose such waivers* [disclosure must be made] in a Form 8–K within five *business* days.

Each code of conduct must also contain an enforcement mechanism that ensures prompt and consistent enforcement of the code, protection for persons reporting questionable behavior, clear and objective standards for compliance, and a fair process by which to determine violations.

Rule 4350A. Qualitative Listing Requirements for Nasdaq National Market and Nasdaq SmallCap Market Issuers Except for Limited Partnerships

Rule 4350A(a), (c), (d) or (h) shall continue to apply to any company until Rule 4350(a), (c), (d) or (h), respectively, becomes effective for such company. The effective dates of Rule 4350(a), (c), (d) or (h) are set out in Rule 4350(a)(5).

(a) No change.

(c) [(b)] Independent Directors

Each issuer shall maintain a sufficient number of independent directors on its board of directors to satisfy the audit committee requirement set forth in Rule 4350(d)(2).

(d) [(c)] Audit Committee

(1) Audit Committee Charter

No Change.

(2) Audit Committee Composition

No Change.

(h) No change.

* * * * *

II. Self-Regulatory Organization's Statement of the Purpose of, and Statutory Basis for, the Proposed Rule Change

In its filing with the Commission, Nasdaq included statements concerning the purpose of and basis for the proposed rule change and discussed any comments it received on the proposed rule change. The text of these statements may be examined at the places specified in Item IV below. Nasdaq has prepared summaries, set forth in Sections A, B, and C below, of the most significant aspects of such statements.

A. Self-Regulatory Organization's Statement of the Purpose of, and Statutory Basis for, the Proposed Rule Change

1. Purpose

On November 4, 2003, the Commission approved a number of rule changes to the corporate governance rules of Nasdaq and of the New York Stock Exchange.[5] These rule changes constituted a major reform in the corporate governance rules of these two markets. In the aftermath of those rule changes, Nasdaq proposes technical amendments to the rules by, for example, inserting the date of Commission approval, correcting some errors in numbering sections, inserting missing headings for certain sections, and similar technical changes. In addition, Nasdaq seeks to clarify that the five-day window allowed by Rule 4350(n) to file disclosure of a code of conduct waiver in a Form 8–K means five business days.

2. Statutory Basis

Nasdaq believes that the proposed rule change is consistent with the provisions of section 15A of the Act,[6] in general and with section 15A(b)(6) of the Act,[7] in particular, in that it is designed to prevent fraudulent and manipulative acts and practices, to promote just and equitable principles of trade, remove impediments to a free and open market and a national market system, and, in general, to protect investors and the public interest. Nasdaq believes that clarifying the new rules helps investors and issuers.

B. Self-Regulatory Organization's Statement on Burden on Competition

Nasdaq does not believe that the proposed rule change will impose any burden on competition that is not necessary or appropriate in furtherance of the purposes of the Act.

C. Self-Regulatory Organization's Statement on Comments on the Proposed Rule Change Received From Members, Participants, or Others

Written comments were neither solicited nor received.

III. Date of Effectiveness of the Proposed Rule Change and Timing for Commission Action

The proposed rule change has been filed by Nasdaq as a ''non-controversial'' rule change pursuant to section 19(b)(3)(A) of the Act[8] and subparagraph (f)(6) of Rule 19b–4 thereunder.[9]

Consequently, because the foregoing proposed rule change, as amended: (1) Does not significantly affect the protection of investors or the public interest, (2) does not impose any significant burden on competition, and (3) by its terms does not become operative for 30 days after the date of this filing, or such shorter time as the Commission may designate, if consistent with the protection of investors and the public interest, provided that the self-regulatory organization has given the Commission written notice of its intent to file the proposed rule change, along with a brief description and text of the proposed rule change, at least five business days prior to the date of filing of the proposed rule change, or such shorter time as the Commission may designate, it has become effective pursuant to section 19(b)(3)(A) of the Act[10] and Rule 19b–4(f)(6) thereunder.[11]

Pursuant to Rule 19b–4(f)(6)(iii),[12] a proposed ''non-controversial'' rule change does not become operative for 30 days after the date of filing, or such shorter time as the Commission may designate if consistent with the protection of investors and the public interest. Nasdaq has requested that the Commission waive the five-day pre-notice requirement and the 30-day operative delay, to permit the NASD to implement the proposal immediately.

The Commission believes that waiving the 30-day operative delay is consistent with the protection of investors and the public interest. The revisions contained in the proposed rule change constitute either technical changes or minor revisions that, in the Commission's view, bring clarity to Nasdaq's new corporate governance listing standards. For these reasons, the Commission designates the proposed rule change, as amended, to be effective and operative upon filing with the Commission.[13] The Commission also waives the five-business day pre-filing requirement.

At any time within 60 days of the filing of the proposed rule change, the Commission may summarily abrogate such rule change if it appears to the Commission that such action is necessary or appropriate in the public interest, for the protection of investors, or otherwise in furtherance of the purposes of the Act.[14]

IV. Solicitation of Comments

Interested persons are invited to submit written data, views, and arguments concerning the proposed rule change, as amended, including whether the proposed rule change is consistent with the Act. Persons making written submissions should file six copies thereof with the Secretary, Securities and Exchange Commission, 450 Fifth Street, NW., Washington, DC 20549–0609. Comments may also be submitted electronically at the following e-mail address: *rule-comments@sec.gov.* All comment letters should refer to File No. SR–NASD–2003–172 . This file number should be included on the subject line if e-mail is used. To help the Commission process and review your comments more efficiently, comments should be sent in hardcopy or by e-mail but not by both methods. Copies of the submission, all subsequent amendments, all written statements with respect to the proposed rule change that are filed with the Commission, and all written communications relating to the proposed rule change between the Commission and any person, other than those that may be withheld from the public in accordance with the provisions of 5 U.S.C. 552, will be available for inspection and copying at the Commission's Public Reference Room. Copies of such filing will also be available for inspection and copying at the principal office of the NASD. All submissions should refer to the File No. SR–NASD–2003–172 and should be submitted by February 11, 2004.

For the Commission, by the Division of Market Regulation, pursuant to delegated authority.[15]

Margaret H. McFarland,

Deputy Secretary.

[FR Doc. 04–1162 Filed 1–20–04; 8:45 am]

BILLING CODE 8010–01–P

[5] *See* Securities Exchange Act Release No. 48745 (November 4, 2003), 68 FR 64154 (November 12, 2003).

[6] 15 U.S.C. 78o–3.

[7] 15 U.S.C. 78o–3(b)(6).

[8] 15 U.S.C. 78s(b)(3)(A).

[9] 17 CFR 240.19b–4(f)(6).

[10] 15 U.S.C. 78s(b)(3)(A).

[11] 17 CFR 240.19b–4(f)(6).

[12] 17 CFR 240.19b–4(f)(6)(iii).

[13] For the purposes only of accelerating the operative date of this proposal, the Commission has considered the proposed rules impact on efficiency, competition, and capital formation. 15 U.S.C. 78c(f).

[14] For purposes of calculating the 60-day abrogation period, the Commission considers the period to commence on January 9, 2004, the date that the NASD filed Amendment No. 4.

[15] 17 CFR 200.30–3(a)(12).

SECURITIES AND EXCHANGE COMMISSION

[Release No. 34–49063; File No. SR–NYSE–2003–36]

Self-Regulatory Organizations; Notice of Filing and Immediate Effectiveness of Proposed Rule Change and Amendment No. 1 Thereto by the New York Stock Exchange, Inc. Relating to Interpretation of Rule 15A (ITS ''Trade-Throughs'' and ''Locked Markets'')

January 13, 2004.

Pursuant to section 19(b)(1) of the Securities Exchange Act of 1934 (''Act'')[1] and Rule 19b–4 thereunder,[2] notice is hereby given that on November 18, 2003, the New York Stock Exchange, Inc. (''NYSE'' or ''Exchange'') filed with the Securities and Exchange Commission (''Commission'') the proposed rule change as described in Items I, II, and III below, which Items have been prepared by the Exchange. On January 6, 2004, the Exchange submitted Amendment No. 1 to the proposed rule change.[3] The Commission is publishing this notice to solicit comments on the proposed rule change, as amended, from interested persons.

I. Self-Regulatory Organization's Statement of the Terms of Substance of the Proposed Rule Change

The proposed rule change is based on a long-standing interpretation of NYSE Rule 15A (ITS ''Trade-Throughs'' and ''Locked Markets'') that trading on the NYSE and sending contemporaneously an Intermarket Trading System (''ITS'') commitment to trade to another participating market to fully satisfy the quote thereon constitutes full compliance with the Rule. A complaint under these circumstances is not valid, even if the commitment cancels/expires or there is more stock behind the quote on the other market. The text of the interpretation is below:

* * * * *

Rule 15A. ITS ''Trade-Throughs'' and ''Locked Markets''

(a)–(e) No Change.

Interpretation

i. *the terms ''Exchange trade-through'' and ''Third participating market center trade-through'' do not include the situation where a member who initiates the purchase (sale) of an ITS security at a price which is higher (lower) than the price at which the security is being offered (bid) in another ITS participating market, sends contemporaneously through ITS to such ITS participating market a commitment to trade at such offer (bid) price or better and for at least the number of shares displayed with that market center's better-priced offer (bid); and*

ii. *a trade-through complaint sent in these circumstances is not valid, even if the commitment sent in satisfaction cancels or expires, and even if there is more stock behind the quote in the other market.*

* * * * *

II. Self-Regulatory Organization's Statement of the Purpose of, and Statutory Basis for, the Proposed Rule Change

In its filing with the Commission, the NYSE included statements concerning the purpose of, and basis for, the proposed rule change, and discussed any comments it received on the proposed rule change. The text of these statements may be examined at the places specified in Item IV below. The Exchange has prepared summaries, set forth in sections A, B, and C below, of the most significant aspects of such statements.

A. Self-Regulatory Organization's Statement of the Purpose of, and Statutory Basis for, the Proposed Rule Change

1. Purpose

The Exchange is proposing to codify a long-standing interpretation of NYSE Rule 15A. NYSE Rule 15A uses certain defined terms as follows:

- An ''Exchange trade-through'', as that term is used in this Rule, occurs whenever a member on the Exchange initiates the purchase on the Exchange of a security traded through ITS (an ''ITS Security'') at a price which is higher than the price at which the security is being offered (or initiates the sale on the Exchange of such a security at a price which is lower than the price at which the security is being bid for) at the time of the purchase (or sale) in another ITS participating market center as reflected by the offer (bid) then being displayed on the Exchange from such other market center. The member described in the foregoing sentence is referred to in this Rule as the ''member who initiated an Exchange trade-through.''
- A ''third participating market center trade-through'', as that term is used in this Rule, occurs whenever a member on the Exchange initiates the purchase of an ITS Security by sending a commitment to trade through the system and such commitment results in an execution at a price which is higher than the price at which the security is being offered (or initiates the sale of such a security by sending a commitment to trade through the System and such commitment results in an execution at a price which is lower than the price at which the security is being bid for) at the time of the purchase (or sale) in another ITS participating market center as reflected by the offer (bid) then being displayed on the Exchange from such other market center. The member described in the foregoing sentence is referred to in this Rule as the ''member who initiated a third participating market center trade-through.''
- A ''trade-through,'' as that term is used in this Rule, means either an Exchange trade-through or a third participating market center trade-through.

The Exchange believes that the basic concept of the trade-through rule is that superior priced quotations in a security displayed from other participant markets should be protected/satisfied if, in another participant market, an execution in the security occurs at an inferior price (a trade-through). One of the remedies that NYSE Rule 15A provides is that, upon a valid complaint of a trade-through, a commitment to trade at the price, and for the number of shares in the disseminated quotation, must be sent to the other Participant market to fully satisfy such quotation. The Exchange believes that the proposed interpretation has long recognized that superior quotations are fully protected/satisfied if an ITS commitment is sent to trade with a bid/offer that would otherwise appear to have been traded-through. That is, a trade will not be considered a trade-through if an ITS commitment is sent contemporaneously from the participant executing the trade for the purpose of being executed against the better-priced displayed bid or offer. A complaint is not valid even if a commitment cancels or expires or there is more stock behind the away quote. Furthermore, the Exchange believes that the interpretation recognizes the impracticality of having to wait for the other market to revise its quotation as a result of trading with a satisfying commitment before trade activity may occur in other markets. Specifically, the interpretation states that:

i. The terms ''Exchange trade-through'' and ''Third participating market center trade-through'' do not include the

[1] 15 U.S.C. 78s(b)(1).

[2] 17 CFR 240.19b–4.

[3] *See* e-mail from Karen Lorentz, Director of Intermarket Relations, NYSE, to Katherine England, Assistant Director, Division of Market Regulation, Commission, dated January 6, 2004 (''Amendment No. 1''). In Amendment No. 1, the NYSE clarified that the proposed interpretation will be added as rule text immediately after NYSE Rule 15A.

situation where a member who initiates the purchase (sale) of an ITS security at a price which is higher (lower) than the price at which the security is being offered (bid) in another ITS participating market, sends contemporaneously through ITS to such ITS participating market a commitment to trade at such offer (bid) price or better and for at least the number of shares displayed with that market center's better-priced offer (bid); and

ii. A trade-through complaint sent in these circumstances is not valid, even if the commitment sent in satisfaction cancels or expires, and even if there is more stock behind the quote in the other market.

2. Statutory Basis

The Exchange believes that the proposal is consistent with section 6(b) of the Act,[4] in general, and Section 6(b)(5) of the Act,[5] in particular, in that it will promote just and equitable principles of trade, facilitate transactions in securities, remove impediments to and perfect the mechanisms of a free and open market and a national market system, and protect investors and the public interest.

B. Self-Regulatory Organization's Statement on Burden on Competition

The Exchange does not believe that the proposed rule change will impose any burden on competition that is not necessary or appropriate in furtherance of the purposes of the Act.

C. Self-Regulatory Organization's Statement on Comments on the Proposed Rule Change Received From Members, Participants or Others

Written comments on the proposed rule change were neither solicited nor received.

III. Date of Effectiveness of the Proposed Rule Change and Timing for Commission Action

The foregoing rule change has become effective pursuant to section 19(b)(3)(A)(i) of the Act[6] and subparagraph (f)(1) of Rule 19b–4 thereunder,[7] because it is concerned solely with the interpretation of the meaning, administration or enforcement of existing NYSE Rule 15A. At any time within 60 days of the filing of such proposed rule change, the Commission may summarily abrogate such rule change if it appears to the Commission that such action is necessary or appropriate in the public interest, for the protection of investors, or otherwise in furtherance of the purposes of the Act.[8]

IV. Solicitation of Comments

Interested persons are invited to submit written data, views and arguments concerning the foregoing, including whether the proposed rule change, as amended, is consistent with the Act. Persons making written submissions should file six copies thereof with the Secretary, Securities and Exchange Commission, 450 Fifth Street, NW., Washington, DC 20549–0609. Comments may also be submitted electronically at the following e-mail address: *rule-comments@sec.gov.* All comment letters should refer to File No. SR–NYSE–2003–36. This file number should be included on the subject line if e-mail is used. To help the Commission process and review comments more efficiently, comments should be sent in hardcopy or by e-mail but not by both methods. Copies of the submission, all subsequent amendments, all written statements with respect to the proposed rule change that are filed with the Commission, and all written communications relating to the proposed rule change between the Commission and any person, other than those that may be withheld from the public in accordance with the provisions of 5 U.S.C. 552, will be available for inspection and copying in the Commission's Public Reference Room. Copies of such filing will also be available for inspection and copying at the principal office of the NYSE. All submissions should refer to file number SR–NYSE–2003–36 and should be submitted by February 11, 2004.

For the Commission, by the Division of Market Regulation, pursuant to delegated authority.[9]

J. Lynn Taylor,

Assistant Secretary.

[FR Doc. 04–1212 Filed 1–20–04; 8:45 am]

BILLING CODE 8010–01–P

[4] 15 U.S.C. 78f(b).

[5] 15 U.S.C. 78f(b)(5).

[6] 15 U.S.C 78s(b)(3)(A)(i).

[7] 17 CFR 240.19b–4(f)(1).

[8] For purposes of determining the effective date of the filing and calculating the 60-day abrogation date, the Commission considers the period to commence on January 6, 2004, the date the NYSE filed Amendment No. 1.

[9] 17 CFR 200.30–3(a)(12).

SECURITIES AND EXCHANGE COMMISSION

[Release No. 34–49074; File No. SR–Phlx–2003–72]

Self-Regulatory Organizations; Notice of Filing of a Proposed Rule Change by the Philadelphia Stock Exchange, Inc. To Reduce Strike Prices for Index Options

January 14, 2004.

Pursuant to Section 19(b)(1) of the Securities Exchange Act of 1934 (''Act''),[1] and Rule 19b–4 thereunder,[2] notice is hereby given that on December 4, 2003, the Philadelphia Stock Exchange, Inc. (''Phlx'' or ''Exchange'') filed with the Securities and Exchange Commission (''Commission'') the proposed rule change as described in Items I, II, and III, below, which Items have been prepared by the Phlx. The Commission is publishing this notice to solicit comments on the proposed rule change from interested persons.

I. Self-Regulatory Organization's Statement of the Terms of Substance of the Proposed Rule Change

The Phlx proposes to amend Phlx Rule 1101A (''Terms of Option Contracts'') to provide that strike price intervals for index options[3] shall be $2.50 for the three consecutive near-term months, $5 for the fourth month, and $10 for the fifth month. The text of the proposed rule change is available at the Office of the Secretary, the Phlx, and at the Commission.

II. Self-Regulatory Organization's Statement of the Purpose of, and Statutory Basis for, the Proposed Rule Change

In its filing with the Commission, the Phlx included statements concerning the purpose of, and basis for, the proposed rule change and discussed any comments it received on the proposed rule change. The text of these statements may be examined at the places specified in Item IV below. The Phlx has prepared summaries, set forth in Sections A, B, and C below, of the most significant aspects of such statements.

A. Self-Regulatory Organization's Statement of the Purpose of, and Statutory Basis for, the Proposed Rule Change

1. Purpose

The Phlx proposes to reduce strike price intervals of index options, thereby

[1] 15 U.S.C. 78s(b)(1).

[2] 17 CFR 240.19b–4.

[3] Index options traded on the Exchange are also known as sector index options.

providing added flexibility to customers trading index options.

Currently, Phlx Rule 1101A provides that strike price intervals for index options shall be $5 for the three consecutive near-term months, $10 for the fourth month, and $30 for the fifth, and that the Exchange may determine to list strike prices at $5 intervals in response to demonstrated customer interest or a specialist request. The proposed rule change would significantly reduce the strike price intervals of index option products—to $2.50 for three consecutive near-term months, $5 for the fourth month, and $10 for the fifth month—and continue to allow the Exchange to list index price options at the new strike prices in response to customer and option specialist requests.

The Phlx believes the proposed rule change is particularly necessary in current economic conditions. Over the past two years, the Exchange notes that stock prices in general have dropped and the prices of certain listed stocks suffered precipitous declines, resulting in a proliferation of stocks trading below $25 (''lowest-tier stocks'') at the Exchange. Many such lowest-tier stocks are the components of the largest index options traded on the Exchange. The Exchange states that at this time, for example, between 40% and 75% of the components of the three largest index options traded on the Exchange (XAU, the Phlx Gold/Silver Index; OSX, the Phlx Oil Service Index; and SOX, the Phlx Semiconductor Index) are lowest-tier stocks. In addition, the Phlx states that the depressed prices of many of the components that make up these index options would require substantial price movement to move between the current $5, $10, and $30 strike price ranges.

The Exchange believes that, given the current last prices of its 14 index options from a range of approximately $86 to $531 as of December 2, 2003,[4] and annualized volatilities ranging from 14% to 39%, 11 of the Exchange's index options would not be statistically expected to: (a) On a daily basis move through the next higher or lower strike price, from the current minimum $5 strike price; (b) on a weekly basis move through more than one $5 strike price; or (c) on a monthly basis move through more than three $5 strike prices. The Phlx believes that many index options are not expected to move through a strike price range at all. Under the current Phlx Rule 1101A strike price structure, for example, seven index options are not expected to move through even one $5 strike price on a weekly basis, and two index options are not expected to move through a single $5 strike price on a monthly basis.

The minimum $5 strike price for index options in Phlx Rule 1101A results in many index options products expiring at or out-of-the-money. The Phlx believes that allowing $2.50 strikes in index options and reducing the current $10 and $30 strikes would give investors increased flexibility and an opportunity to trade options series that are more likely to expire in-the-money.

Moreover, the Exchange believes that, according to Options Price Reporting Authority (''OPRA'') figures, there is sufficient OPRA system capacity to accommodate the Exchange's proposal. On a daily basis, for example, the OPRA participants (AMEX, CBOE, ISE, PCX, and Phlx)[5] are using an average of less than 10,000 messages per second (''mps''), which is less than one third of the current total system capacity of 32,000 mps.[6] To date, the OPRA participants have yet to exceed 16,000 mps for any extended period of time.[7] Thus, the Phlx believes that implementing the proposed strike price changes to Phlx Rule 1101A should not have any significant negative impact on OPRA system capacity.

2. Statutory Basis

The Exchange believes that the proposed rule change is consistent with Section 6(b) of the Act[8] in general, and furthers the objectives of Section 6(b)(5) of the Act[9] in particular, in that it is designed to perfect the mechanism of a free and open market and the national market system, protect investors and the public interest and promote just and equitable principles of trade, by allowing the Exchange to list index options at strike price intervals of $2.50 for three consecutive near-term months, $5 for the fourth month, and $10 for the fifth month, and thereby providing added flexibility to customers trading index options.

B. Self-Regulatory Organization's Statement on Burden on Competition

The Exchange does not believe that the proposed rule change will impose any inappropriate burden on competition.

C. Self-Regulatory Organization's Statement on Comments on the Proposed Rule Change Received From Members, Participants, or Others

No written comments were either solicited or received.

III. Date of Effectiveness of the Proposed Rule Change and Timing for Commission Action

Within 35 days of the date of publication of this notice in the **Federal Register** or within such longer period (i) as the Commission may designate up to 90 days of such date if it finds such longer period to be appropriate and publishes its reasons for so finding or (ii) as to which Phlx consents, the Commission will:

A. By order approve such proposed rule change; or

B. institute proceedings to determine whether the proposed rule change should be disapproved.

IV. Solicitation of Comments

Interested persons are invited to submit written data, views and arguments concerning the foregoing, including whether the proposed rule change is consistent with the Act. Persons making written submissions should file six copies thereof with the Secretary, Securities and Exchange Commission, 450 Fifth Street, NW., Washington, DC 20549–0609. Comments may also be submitted electronically at the following e-mail address: *rule-comments@sec.gov.* All comment letters should refer to File No. SR–Phlx–2003–72. This file number should be included on the subject line if e-mail is used. To help the Commission process and review your comments more efficiently, comments should be sent in hardcopy or by e-mail but not by both methods. Copies of the submission, all subsequent amendments, all written statements with respect to the proposed rule change that are filed with the Commission, and all written communications relating to the proposed rule change between the Commission and any person, other than those that may be withheld from the public in accordance with the provisions of 5 U.S.C. 552, will be available for inspection and copying in the Commission's Public Reference Room. Copies of such filing will also be available for inspection and copying at

[4] The Exchange notes that the last price of the highest-priced index, the Phlx/KBX Bank Index, at approximately $955, is almost twice that of the second-highest-priced index, the Phlx Semiconductor Index, and significantly higher-priced than the Exchange's 12 other indexes.

[5] The OPRA participants are: American Stock Exchange LLC; Chicago Board Options Exchange, Inc.; International Securities Exchange, Inc.; and Pacific Exchange, Inc.

[6] The OPRA participants have recently voted to expand OPRA system capacity to 40,000 mps.

[7] According to OPRA's information processor, Securities Industry Information Corporation (''SIAC''), on September 30, 2003, the one-minute peak (total for all participants) was approximately 15,069 mps, and the five-minute peak was approximately 12,639 mps.

[8] 15 U.S.C. 78f(b).

[9] 15 U.S.C. 78f(b)(5).

the principal office of the Phlx. All submissions should refer to File No. SR–Phlx–2003–72 and should be submitted by February 11, 2004.

For the Commission, by the Division of Market Regulation, pursuant to delegated authority.[10]

J. Lynn Taylor,

Assistant Secretary.

[FR Doc. 04–1213 Filed 1–20–04; 8:45 am]

BILLING CODE 8010–01–P

SOCIAL SECURITY ADMINISTRATION

The Ticket To Work and Work Incentives Advisory Panel Meeting

AGENCY: Social Security Administration (SSA).

ACTION: Notice of meetings.

DATES: February 10, 2004, 9 a.m.–4 p.m.;* February 11, 2004, 9 a.m.–5 p.m.; February 12, 2004, 9 a.m.–1 p.m.

* The full deliberative panel meeting ends at 4 p.m. The standing committees of the Panel will meet from 4 p.m. until 5:30 p.m.

ADDRESSES: Wyndham Bonaventure Resort & Spa, 250 Racquet Club Road, Weston, FL 33326, Phone: (954) 389–3300.

SUPPLEMENTARY INFORMATION:

Type of meeting: This is a quarterly meeting open to the public. The public is invited to participate by coming to the address listed above. Public comment will be taken during the quarterly meeting. The public is also invited to submit comments in writing on the implementation of the Ticket to Work and Work Incentives Improvement Act (TWWIIA) of 1999 at any time.

Purpose: In accordance with section 10(a)(2) of the Federal Advisory Committee Act, the Social Security Administration (SSA) announces a meeting of the Ticket to Work and Work Incentives Advisory Panel (the Panel). Section 101(f) of Pub. L. 106–170 establishes the Panel to advise the President, the Congress and the Commissioner of SSA, on issues related to work incentives programs, planning and assistance for individuals with disabilities as provided under section 101(f)(2)(A) of the TWWIIA. The Panel is also to advise the Commissioner on matters specified in section 101(f)(2)(B) of that Act, including certain issues related to the Ticket to Work and Self-Sufficiency Program established under section 101(a) of that Act.

Interested parties are invited to attend the meeting. The Panel will use the meeting time to receive briefings, hear presentations, conduct full Panel deliberations on the implementation of TWWIIA and receive public testimony. The topics for the meeting will include presentations of Vocational Rehabilitation, Use and Access to the SSA Work Incentives, Employment Supports, Advocacy and the Ticket, and agency updates from SSA, the Department of Education and the Department of Health and Human Services.

The Panel will meet in person commencing on Tuesday, February 10, 2004 from 9 a.m. to 4 p.m. (standing committee meetings from 4 p.m. to 5:30 p.m.); Wednesday, February 11, 2004 from 9 a.m. to 5 p.m.; and Thursday, February 12, 2004 from 9 a.m. to 1 p.m.

Agenda: The Panel will hold a quarterly meeting. Briefings, presentations, full Panel deliberations and other Panel business will be held Tuesday, Wednesday and Thursday, February 10, 11, and 12, 2004. Public testimony will be heard in person Tuesday, February 10, 2004 from 3:15 p.m. to 3:45 p.m. and on Thursday, February 12, 2004 from 9 a.m. to 9:30 a.m. Members of the public must schedule a timeslot in order to comment. In the event that the public comments do not take up the scheduled time period for public comment, the Panel will use that time to deliberate and conduct other Panel business.

Individuals interested in providing testimony in person should contact the Panel staff as outlined below to schedule time slots. Each presenter will be called on by the Chair in the order in which they are scheduled to testify and is limited to a maximum five-minute verbal presentation. Full written testimony on TWWIIA Implementation, no longer than 5 pages, may be submitted in person or by mail, fax or email on an on-going basis to the Panel for consideration.

Since seating may be limited, persons interested in providing testimony at the meeting should contact the Panel staff by e-mailing Monique Fisher, at *Monique.Fisher@ssa.gov* or calling (202) 358–6435.

The full agenda for the meeting will be posted on the Internet at *http://www.ssa.gov/work/panel* at least one week before the meeting or can be received in advance electronically or by fax upon request.

Contact Information: Anyone requiring information regarding the Panel should contact the TWWIIA Panel staff. Records are being kept of all Panel proceedings and will be available for public inspection by appointment at the Panel office. Anyone requiring information regarding the Panel should contact the Panel staff by:

- Mail addressed to Social Security Administration, Ticket to Work and Work Incentives Advisory Panel Staff, 400 Virginia Avenue, SW., Suite 700, Washington, DC 20024.
- Telephone contact with Monique Fisher at (202) 358–6435.
- Fax at (202) 358–6440.
- E-mail to *TWWIIAPanel@ssa.gov.*

Dated: January 13, 2004.

Deborah Morrison,

Designated Federal Officer.

[FR Doc. 04–1230 Filed 1–20–04; 8:45 am]

BILLING CODE 4191–02–P

DEPARTMENT OF TRANSPORTATION

Federal Highway Administration

Environmental Impact Statement, Manatee County, FL

AGENCY: Federal Highway Administration (FHWA), DOT.

ACTION: Revised notice of intent.

SUMMARY: On November 13, 2000, the FHWA published a notice of intent in the **Federal Register** (Vol. 65, No. 219, pg. 67791) to prepare an environmental impact statement (EIS) for a proposed roadway/bridge project in Manatee County, Florida. Subsequent study indicated that there was very little controversy and impacts to pristine natural environment as previously anticipated. The FHWA is re-issuing this notice to advise the public that although an environmental assessment (EA) was prepared and approved, an EIS will now be prepared in response to growing public controversy.

FOR FURTHER INFORMATION CONTACT: Mr. BSB Murthy, District Transportation Engineer, Federal Highway Administration, 227 North Bronough Street, Room 2015, Tallahassee, Florida 32301–2015, Telephone (850) 942–9650, Ext. 3032.

SUPPLEMENTARY INFORMATION: The FHWA, in consultation with the Florida Department of Transportation, will prepare an EIS for a proposal to improve regional traffic circulation in the rapidly developing portion of eastern Manatee County. The EIS will examine a study area bounded by State Road (SR) 64 to the south, Rye Road to the east, CR 675 and U.S. 301 to the north and I–75 to the west. The proposed project will include improvements to Upper Manatee River Road and Fort Hamer Road, and provide a new bridge connection across the Upper Manatee River south of the community of Parrish

[10] 17 CFR 200.30–3(a)(12).

in Manatee County, Florida. The project limits extend a distance of approximately 7.0 miles from SR 64 on the south to U.S. 301 on the north.

This project is commonly referred to as the Upper Manatee River Project Development and Environment (PD&E) Study. This project has been identified as a high priority by the Sarasota/Manatee Metropolitan Planning Organization and is needed to accommodate future growth and to serve as an additional hurricane evacuation route.

An EA was previously completed for the project and signed on September 6, 2002. After the identification and analysis of numerous corridors, alternatives and locations, the EA study recommended two through lanes in each direction along the existing Upper Manatee River Road/Fort Hamer Road corridor and a new four-lane bridge across the Manatee River. During the EA study, the proposed project generated significant controversy among residents within the study area. As a result, an EIS is now being prepared and will consider all reasonable alternatives, as well as a no-build alternative.

Letters describing the proposed action and soliciting comments will be sent to appropriate Federal, State, and local agencies, and to private organizations and citizens who have expressed interest in this proposal. Public meetings will be held between January and November 2004. In addition, a Public Hearing will be held in the study area. Public notice will be given of the time and place of the meetings and hearing. The Draft EIS will be made available for public and agency review and comment. No formal scoping meeting is planned at this time.

To ensure that the full range of issues related to the proposed action is addressed and all significant issues identified, comments and suggestions are invited from all interested parties. Comments or questions concerning this proposed action and the EIS should be directed to the FHWA at the address provided above.

(Catalog of Federal Domestic Assistance Program Number 20.205, Highway Research, Planning and Construction. The regulations implementing Executive Order 12372 regarding intergovernmental consultation on Federal programs and activities apply to this program)

Issued on: January 14, 2004.

BSB Murthy,

District Transportation Engineer, Tallahassee, Florida.

[FR Doc. 04–1223 Filed 1–20–04; 8:45 am]

BILLING CODE 4910–22–M

DEPARTMENT OF THE TREASURY

Internal Revenue Service

Open Meeting of the Area 6 Taxpayer Advocacy Panel (Including the States of Alaska, Arizona, Colorado, Hawaii, Idaho, Montana, New Mexico, Nevada, Oregon, Washington, and Wyoming)

AGENCY: Internal Revenue Service (IRS), Treasury.

ACTION: Notice.

SUMMARY: An open meeting of the Area 6 Taxpayer Advocacy Panel will be conducted (via teleconference). The Taxpayer Advocacy Panel (TAP) is soliciting public comments, ideas, and suggestions on improving customer service at the Internal Revenue Service. The TAP will use citizen input to make recommendations to the Internal Revenue Service.

DATES: The meeting will be held Monday, February 23, 2004.

FOR FURTHER INFORMATION CONTACT: Judi Nicholas at 1–888–912–1227, or 206–220–6096.

SUPPLEMENTARY INFORMATION: Notice is hereby given pursuant to section 10(a)(2) of the Federal Advisory Committee Act, 5 U.S.C. App. (1988) that an open meeting of the Area 6 Taxpayer Advocacy Panel will be held Monday, February 23, 2004, from 2 p.m. Pacific time to 3 p.m. Pacific time via a telephone conference call. The public is invited to make oral comments. Individual comments will be limited to 5 minutes. If you would like to have the TAP consider a written statement, please call 1–888–912–1227 or 206–220–6096, or write to Judi Nicholas, TAP Office, 915 2nd Avenue, MS W–406, Seattle, WA 98174. Due to limited conference lines, notification of intent to participate in the telephone conference call meeting must be made with Judi Nicholas. Ms. Nicholas can be reached at 1–888–912–1227 or 206–220–6096.

The agenda will include the following: Various IRS issues.

Dated: January 14, 2004.

Bernard Coston,

Director, Taxpayer Advocacy Panel.

[FR Doc. 04–1226 Filed 1–20–04; 8:45 am]

BILLING CODE 4830–01–P

DEPARTMENT OF THE TREASURY

Internal Revenue Service

Open Meeting of the Taxpayer Advocacy Panel (TAP) Multilingual Initiative Issue (MLI) Committee Will Be Conducted (Via Teleconference)

AGENCY: Internal Revenue Service (IRS), Treasury.

ACTION: Notice.

SUMMARY: An open meeting of the Taxpayer Advocacy Panel (TAP) Multilingual Initiative Issue (MLI) Committee will be conducted (via teleconference). The Taxpayer Advocacy Panel is soliciting public comments, ideas, and suggestions on improving customer service at the Internal Revenue Service.

DATES: The meeting will be held Friday, February 20, 2004, from 1 p.m. e.s.t. to 2 p.m. e.s.t.

FOR FURTHER INFORMATION CONTACT: Inez E. De Jesus at 1–888–912–1227, or 954–423–7977.

SUPPLEMENTARY INFORMATION: Notice is hereby given pursuant to section 10(a)(2) of the Federal Advisory Committee Act, 5 U.S.C. App. (1988) that an open meeting of the Taxpayer Advocacy Panel Multilingual Initiative Issue Committee will be held Friday, February 20, 2004, from 1 p.m. e.s.t. to 2 p.m. e.s.t. via a telephone conference call. Individual comments will be limited to 5 minutes. If you would like to have the TAP consider a written statement, please call 1–888–912–1227 or 954–423–7977, or write Inez E. De Jesus, TAP Office, 1000 South Pine Island Rd., Suite 340, Plantation, FL 33324. Due to limited conference lines, notification of intent to participate in the telephone conference call meeting must be made with Inez E. De Jesus. Ms. De Jesus can be reached at 1–888–912–1227 or 954–423–7977.

The agenda will include the following: Various IRS issues.

Dated: January 14, 2004.

Bernard Coston,

Director, Taxpayer Advocacy Panel.

[FR Doc. 04–1227 Filed 1–20–04; 8:45 am]

BILLING CODE 4830–01–P

DEPARTMENT OF VETERANS AFFAIRS

Privacy Act of 1974; System of Records

AGENCY: Department of Veterans Affairs (VA).

ACTION: Notice of amendment to system of records.

SUMMARY: The Privacy Act of 1974 (5 U.S.C. 552a(e)(4)) requires that all agencies publish in the **Federal Register** a notice of the existence and character of their systems of records. Notice is hereby given that the Department of Veterans Affairs (VA) is amending the system of records entitled, ''Gulf War Registry—VA'' (93VA131) as set forth in the **Federal Register** 66 FR 64072–64075, December 11, 2001. VA is amending the system by revising the System Location, Categories of Records in the System, the Authority for Maintenance of the System, the Purpose(s) of the System, the Routine Uses of Records Maintained in the System, including Categories of Users and the Purposes of Such Uses, and the Policies and Practices for Storing, Retrieving, Accessing, Retaining and Disposing of Records in the System. VA is republishing the system notice in its entirety.

DATES: Comments on the establishment of this system of records must be received no later than February 20, 2004. If no public comment is received, the amended system will become effective February 20, 2004.

ADDRESSES: You may mail or hand-deliver written comments concerning the proposed amended system of records to the Director, Regulations Management (00REG1), Department of Veterans Affairs, 810 Vermont Avenue, NW., Washington, DC 20420; or fax comments to (202) 273–9026; or email comments to ''*OGCRegulations@mail.va.gov*''. All relevant material received before February 20, 2004 will be considered. Comments will be available for public inspection at the above address in the Office of Regulations Management, Room 1063B, between the hours of 8 a.m. and 4:30 p.m., Monday through Friday (except holidays).

FOR FURTHER INFORMATION CONTACT: Veterans Health Administration (VHA) Privacy Act Officer (19F2), Department of Veterans Affairs, 810 Vermont Avenue, NW., Washington, DC 20420, (727) 320–1839.

SUPPLEMENTARY INFORMATION: The Gulf War Registry (GWR), located at the Austin Automation Center (AAC), Austin, Texas, is an automated integrated system. The registry contains demographic and medical data of registry examinations from August 2, 1990, until such time as Congress by law ends the Gulf War, for veterans serving in the Southwest Asia theatre of operations during the Gulf War who may have been exposed to a toxic substance or environmental hazard. There is also registry data on veteran's spouse or children suffering from an illness or disorder (including birth defects, miscarriages, or stillbirth) that cannot be disassociated from the veteran's service in the Southwest Asia theatre of operations.

These data are entered manually on code sheets by VA facility staff or, in the case of veterans' spouses and children, by VA or non-VA clinicians. Hard copies of these code sheets then are sent to the AAC for entry into the GWR data set. The principal identifiers in these GWR records are the Social Security Number and veteran's name. The GWR system of records located at VA Central Office, Washington, DC, is an optical disk system containing images of paper records, *i.e.*, Gulf War (GW) code sheets. Once these paper records are scanned on optical disks, they are disposed of in accordance with VHA Records Control Schedule (RCS) 10–1.

The System Location has been amended to include the GWR system's change to a secure web-based data entry procedure. The process moved to a secure web-based data entry system at each VA facility during the first quarter of calendar year 2003. The secure web-based data entry system is maintained by the AAC and provides retrievable images to users. The optical disk system is currently being utilized where there is no access to the secure web-based system. However, the optical disk system for images of paper records, *i.e.*, GW code sheets, is scheduled to be discontinued in 2004 and all access to the GWR system will be through the secure web-based data entry system.

The Categories of Records in the System has been amended to change the phrase ''signature of examiner'' to ''signature of examiner/environmental health clinician'' and to delete the phrase ''whether veteran consented to having the DU questionnaire data shared with the Department of Defense'' as the Department of Defense no longer requires this information from the Department of Veterans Affairs.

The Authority for Maintenance of the System has been amended to delete a duplicate reference to U.S.C. 1710(e)(1)(B).

The Purpose(s) of this GWR system of records has been amended to add a reference to examinations by VA clinicians. The purpose of the system is to provide information about veterans who have had a GWR examination at a VA facility, and their spouses and/or children who have had examinations by VA or non-VA clinicians. The records may be used to assist researchers in generating hypotheses for research studies; to enable management to track patient demographics; to assist in planning the delivery of health care services, including the associated costs; and, to possibly be used in the adjudication of claims perhaps related to exposure to a toxic substance or environmental hazard.

VA is proposing to amend the following routine use disclosures of information to be maintained in the system:

- Routine use number seven (7) is being amended in its entirety. VA must be able to comply with the requirements of agencies charged with enforcing the law and conducting investigations. VA must also be able to provide information to state or local agencies charged with protecting the public's health as set forth in state law. The routine use will be as follows:

On its own initiative, VA may disclose information, except for the names and home addresses of veterans and their dependents, to a Federal, state, local, tribal or foreign agency charged with the responsibility of investigating or prosecuting civil, criminal or regulatory violations of law, or charged with enforcing or implementing the statute, regulation, rule or order issued pursuant thereto. On its own initiative, VA may also disclose the names and addresses of veterans and their dependents to a Federal agency charged with the responsibility of investigating or prosecuting civil, criminal or regulatory violations of law, or charged with enforcing or implementing the statute, regulation, rule or order issued pursuant thereto.

The Privacy Act permits VA to disclose information about individuals without their consent for a routine use when the information will be used for a purpose that is compatible with the purpose for which VA collected the information. In all of the routine use disclosures described above, the recipient of the information will use the information in connection with a matter relating to one of VA's programs, will use the information to provide a benefit to VA, or disclosure is required by law.

Under section 264, Subtitle F of Title II of the Health Insurance Portability and Accountability Act of 1996 (HIPAA) Public Law 104–191, 100 Stat. 1936, 2033–34 (1996), the United States Department of Health and Human Services (HHS) published a final rule, as amended, establishing Standards for Privacy of Individually-Identifiable Health Information, 45 CFR parts 160 and 164. VHA may not disclose individually-identifiable health information (as defined in HIPAA and

the Privacy Rule, 42 U.S.C. 1320(d)(6) and 45 CFR 164.501) pursuant to a routine use unless either: (a) the disclosure is required by law, or (b) the disclosure is also permitted or required by the HHS Privacy Rule. The disclosures of individually-identifiable health information contemplated in the routine uses published in this amended system of records notice are permitted under the Privacy Rule or required by law. However, to also have authority to make such disclosures under the Privacy Act, VA must publish these routine uses. Consequently, VA is publishing these routine uses and is adding a preliminary paragraph to the routine uses portion of the system of records notice stating that any disclosure pursuant to the routine uses in this system of records notice must be either required by law or permitted by the Privacy Rule before VHA may disclose the covered information.

The Storage section of Policies and Practices for Storing, Retrieving, Accessing, Retaining and Disposing of Records in the System has been amended to address the data collection process move to a web-based system.

References throughout the system notice to VA Headquarters have been amended to VA Central Office.

The Report of Intent to Publish an Amended System of Records and an advance copy of the system notice have been sent to the appropriate Congressional committees and to the Director of Office of Management and Budget (OMB) as required by 5 U.S.C. 552a(r) (Privacy Act) and guidelines issued by OMB (65 FR 77677), December 12, 2000.

Approved: December 29, 2003.

Anthony J. Principi,

Secretary of Veterans Affairs.

93VA131

SYSTEM NAME:

Gulf War Registry-VA.

SYSTEM LOCATION:

Character-based data from Gulf War Registry Code Sheets are maintained in a registry dataset at the Austin Automation Center (AAC), 1615 Woodward Street, Austin, Texas 78772. Since the dataset at the AAC is not all-inclusive, *i.e.,* narratives, signatures, noted on the code sheets are not entered into this system, images of the code sheets are maintained at the Department of Veterans Affairs (VA), Environmental Agents Service (131), 810 Vermont Avenue, NW., Washington, DC 20420. These are electronic images of paper records, *i.e.,* code sheets and questionnaires that are stored on optical disks. With the transition to a web-based data entry system, this optical disk system will be discontinued in 2004. Images of code sheets are accessible in the web-based data entry system.

CATEGORIES OF INDIVIDUALS COVERED BY THIS SYSTEM:

Veterans who may have been exposed to toxic substances or environmental hazard while serving in the Southwest theatre of operations during the Gulf War from August 2, 1990, until such time as Congress by law ends the Gulf War, and have had a Gulf War Registry (GWR) examination at a VA medical facility. Also, a spouse or child suffering from an illness or disorder (including birth defects, miscarriages, or stillbirth), which cannot be disassociated from the veteran's service in the Southwest Asia theatre of operations and who has had a GWR examination performed by a VA or non-VA clinician.

CATEGORIES OF RECORDS IN THE SYSTEM:

These records consist of code sheet records recording VA facility code identifier where veteran was examined or treated; veteran's name; address; social security number; date of birth; race/ethnicity; marital status; sex; branch of service; periods of service; hospital status, *i.e.,* inpatient; outpatient; areas of service in the Gulf War theatre of operations; list of military units where veteran served; military occupation specialty; names of units in which veteran served; veteran's reported exposure to environmental factors; any traumatic experiences while in the Gulf War; veteran's self-assessment of health; veteran's functional impairment; report of birth defects and infant death(s) among veteran's children and/or problems with pregnancy and infertility; date of registry examination; veteran's complaints/symptoms; consultations; diagnoses; disposition (hospitalized, referred for outpatient treatment, *etc.*); whether veteran had an unexplained illness and had further tests and consultations and diagnoses as part of a Phase II, Uniform Case Assessment Examination; and name and signature of examiner/clinician coordinator, when provided. Similar responses for spouse and children of Gulf War veterans examined by non-VA physicians are contained in the records.

Another category of data entries is obtained from depleted uranium (DU) questionnaires, a supplement to the Gulf War code sheet. The data entries may contain the facility identifier where the information was completed; demographic information (name and social security number); daytime and evening phone numbers; date of questionnaire completion; date of arrival in and departure from the Gulf War theatre of operations; source of referral to VA medical center for evaluation; where veteran served (*i.e.*, Iraq, Kuwait, Saudi Arabia, the neutral zone [between Iraq and Saudi Arabia], Bahrain, Qatar, the United Arab Emirates, Oman, Gulf of Aden, Gulf of Oman and the Waters of the Persian Gulf, Arabian Sea and Red Sea); capacity in which veteran served; questions relating to potential inhalation exposures to DU including those on, in, or near vehicles hit with friendly fire or enemy fire, entering burning vehicles, individuals near fires involving DU munitions, individuals salvaging damaged vehicles, and those near burning vehicles; whether veteran was wounded, retained DU fragments in veteran's body, handled DU penetrator rounds or any other exposures to DU; whether a 24-hour urine collection for uranium was performed; name, title and signature of examiner/environmental health clinician, when provided, and results of urine uranium tests, expressed per microgram per gram creatinine.

AUTHORITY FOR MAINTENANCE OF THE SYSTEM:

Title 38, United States Code (U.S.C.) 1710(e)(1)(B) and § 1720E.

PURPOSE(S):

The records will be used for the purpose of providing information about: Veterans who have had a GWR examination at a VA facility and their spouses and/or children who have had examinations by VA or non-VA clinicians to assist in generating hypotheses for research studies; providing management with the capability to track patient demographics; reporting birth defects among veterans' children and grandchildren; planning the delivery of health care services and associated cost; and assisting in the adjudication of claims possibly related to exposure to a toxic substance or environmental hazard.

ROUTINE USES OF RECORDS MAINTAINED IN THE SYSTEM, INCLUDING CATEGORIES OF USERS AND THE PURPOSES OF SUCH USES:

VA may disclose protected health information pursuant to the following routine uses where required by law, or required or permitted by 45 CFR parts 160 and 164.

1. The record of an individual who is covered by this system may be disclosed to a member of Congress or staff person acting for the member when the member or staff person requests the record on

behalf of, and at the written request of, that individual.

2. Disclosure of records covered by this system, as deemed necessary and proper to named individuals serving as accredited service organization representatives, and other individuals named as approved agents or attorneys for a documented purpose and period of time, to aid beneficiaries in the preparation and presentation of their cases during the verification and/or due process procedures, and in the presentation and prosecution of claims under laws administered by VA.

3. A record containing the name(s) and address(es) of present or former members of the armed services and/or their dependents may be released from this system of records under certain circumstances:

a. To any nonprofit organization if the release is directly connected with the conduct of programs and the utilization of benefits under Title 38, and

b. To any criminal or civil law enforcement governmental agency or instrumentality charged under applicable law with the protection of the public health or safety if a qualified representative of such organization, agency or instrumentality has made a written request that such name(s) or address(es) be provided for a purpose authorized by law; provided, further, that the record(s) will not be used for any purpose other than that stated in the request and that the organization, agency or instrumentality is aware of the penalty provision of 38 U.S.C. 5701(f).

4. Disclosure may be made to the National Archives and Record Administration (NARA) in records management inspections conducted under authority of Title 44 United States Code.

5. Disclosure of information, excluding name and address (unless name and address is furnished by the requestor) for research purposes determined to be necessary and proper, to epidemiological and other research facilities approved by the Under Secretary for Health.

6. In order to conduct Federal research necessary to accomplish a statutory purpose of an agency, at the written request of the head of the agency, or designee of the head of that agency, the name(s) and address(es) of present or former personnel or the Armed Services and/or their dependents may be disclosed

a. to a Federal department or agency, or

b. directly to a contractor of a Federal department or agency. When a disclosure of this information is to be made directly to the contractor, VA may impose applicable conditions on the department, agency, and/or contractor to ensure the appropriateness of the disclosure to the contractor.

7. VA may disclose on its own initiative any information in this system, except the names and home addresses of veterans and their dependents, which is relevant to a suspected or reasonably imminent violation of law, whether civil, criminal or regulatory in nature and whether arising by general or program statute or by regulation, rule or order issued pursuant thereto, to a Federal, state, local, tribal, or foreign agency charged with the responsibility of investigating or prosecuting such violation, or charged with enforcing or implementing the statute, regulation, rule or order. On its own initiative, VA may also disclose the names and addresses of veterans and their dependents to a Federal agency charged with the responsibility of investigating or prosecuting civil, criminal or regulatory violations of law, or charged with enforcing or implementing the statute, regulation, rule or order issued pursuant thereto.

8. For program review purposes and the seeking of accreditation and/or certification, disclosure may be made to survey teams of the Joint Commission on Accreditation of Healthcare Organizations (JCAHO), College of American Pathologists, American Association of Blood Banks, and similar national accreditation agencies or boards with whom VA has a contract or agreement to conduct such reviews but only to the extent that the information is necessary and relevant to the review.

9. Records from this system of records may be disclosed to the Department of Justice (DOJ) or in a proceeding before a court, adjudicative body, or other administrative body before which the Department is authorized to appear when: (a) The Department, or any component thereof; or (b) any employee of the Department in his or her official capacity where the DOJ or the Department has agreed to represent the employee; or (c) the U.S., when the Department determines that litigation is likely to affect the Department or any of its components; is a party to litigation, and has an interest in such litigation, and the use of such records by the DOJ or the Department is deemed by the Department to be relevant and necessary to the litigation provided, however, that the disclosure is compatible with the purpose for which the records were collected.

10. Relevant information may be disclosed to individuals, organizations, private or public agencies, etc., with whom VA has a contract or agreement to perform such services as VA may deem practical for the purposes of laws administered by VA, in order for the contractor to perform the services of the contract or agreement.

POLICIES AND PRACTICES FOR STORING, RETRIEVING, ACCESSING, RETAINING AND DISPOSING OF RECORDS IN THE SYSTEM:

STORAGE:

In 2003, the data collection process moved to a secure web-based system. Data previously recorded manually and converted to electronic format is now input through the secure VA Intranet system. Data is stored on a web server hosted by the AAC and is retrievable by the facility. Three levels of access are provided for the data that is input, using password security linked to the AAC Top Secret Security system, with mandated changes every 90 days. Data from individual facilities is uploaded nightly and stored on Direct Access Storage Devices at the AAC, Austin, Texas, and on optical disks at VA Central Office, Washington, DC. AAC stores registry tapes for disaster back up at an off-site location. VA Central Office also has back-up optical disks stored off-site. In addition to electronic data, registry reports are maintained on paper documents and microfiche.

The optical disk system is currently being utilized where there is no access to the secure web-based system. The optical disk system is scheduled to be discontinued in 2004 and all access to the GWR system will be through the secure web-based data entry system. Records will be maintained and disposed of in accordance with records disposition authority approved by the Archivist of the United States.

RETRIEVABILITY:

Records are indexed by name of veteran and social security number.

SAFEGUARDS:

Access to records at VA Central Office is only authorized to VA personnel on a ''need to know'' basis. Records are maintained in manned rooms during working hours. During non-working hours, there is limited access to the building with visitor control by security personnel. Registry data maintained at the AAC can only be updated by authorized AAC personnel.

Data is securely located behind the VA firewall and only accessible from the VA Local Area Network (LAN) through the VA Intranet. Read access to the data is granted through a telecommunications network to authorized VA Central Office staff. AAC reports are also accessible through a

telecommunications network on a read-only basis to the owner (VA facility) of the data. Access is limited to authorized employees by individually unique access codes which are changed periodically.

Physical access to the AAC is generally restricted to AAC staff, VA Central Office staff, custodial personnel, Federal Protective Service and authorized operational personnel through electronic locking devices. All other persons gaining access to the computer rooms are escorted. Backup records stored off-site for both the AAC and VA Central Office are safeguarded in secured storage areas. A disaster recovery plan is in place and system recovery is tested at an off-site facility in accordance with established schedules.

RETENTION AND DISPOSAL:

Records will be maintained and disposed of in accordance with records disposition authority approved by the Archivist of the United States.

SYSTEM MANAGER(S) AND ADDRESS:

Director, Environmental Agents Service (131), Office of Public Health and Environmental Hazards, (clinical issues) and Management/Program Analyst, Environmental Agents Service (131) (administrative issues), VA Central Office, 810 Vermont Avenue, NW., Washington, DC 20420.

NOTIFICATION PROCEDURE:

An individual who wishes to determine whether a record is being maintained in this system under his or her name or other personal identifier, or wants to determine the contents of such record, should submit a written request or apply in person to the last VA facility where medical care was provided or submit a written request to the Director, Environmental Agents Service (131), Office of Public Health and Environmental Hazards or the Management/Program Analyst, Environmental Agents Service (131), VA Central Office, 810 Vermont Avenue, NW., Washington, DC 20420. Inquiries should include the veteran's name, social security number, and return address.

RECORD ACCESS PROCEDURES:

An individual who seeks access to records maintained under his or her name may write or visit the nearest VA facility or write to the Director, Environmental Agents Service (131) or the Management/Program Analyst, Environmental Agents Service (131), VA Central Office, 810 Vermont Avenue, NW., Washington, DC 20420.

CONTESTING RECORDS PROCEDURES:

(See ''Record Access Procedures.'')

RECORD SOURCE CATEGORIES:

VA patient medical records, various automated record systems providing clinical and managerial support to VA health care facilities, the veteran, family members, and records from the Veterans Benefits Administration, Department of Defense, Department of the Army, Department of the Air Force, Department of the Navy and other Federal agencies.

[FR Doc. 04–1164 Filed 1–20–04; 8:45 am]

BILLING CODE 8320–01–P

Corrections

Federal Register

Vol. 69, No. 13

Wednesday, January 21, 2004

This section of the FEDERAL REGISTER contains editorial corrections of previously published Presidential, Rule, Proposed Rule, and Notice documents. These corrections are prepared by the Office of the Federal Register. Agency prepared corrections are issued as signed documents and appear in the appropriate document categories elsewhere in the issue.

ENVIRONMENTAL PROTECTION AGENCY

40 CFR Part 52

[IA–200–1200; FRL–7608–3]

Approval and Promulgation of Implementation Plans; State of Iowa; Correction

Correction

In rule document 04–374 beginning on page 1537 in the issue of Friday, January 9, 2004, make the following correction:

§52.820 [Corrected]

On page 1538, in §52.820, in the table, in the entry for Polk County, in the third column ''Comments,'' the first line ''Article I, Board of Section 5–2'' should read, ''Article I, Section 5–2.''

[FR Doc. C4–374 Filed 1–20–04; 8:45 am]

BILLING CODE 1505–01–D

SECURITIES AND EXCHANGE COMMISSION

[Release No. 34–48883; File No. SR–PCX–2003–24]

Self-Regulatory Organizations; Pacific Exchange, Inc.; Order Approving Proposed Rule Change and Amendments No. 1 and 2 and Notice of Filing and Order Granting Accelerated Approval to Amendment No. 3 Relating to the Implementation of a Closing Auction for the Archipelago Exchange and the Establishment of Market-on-Close and Limit-on-Close Order Types

December 4, 2003.

Correction

In notice document 03–30838 beginning on page 69748 in the issue of Monday, December 15, 2003, make the following correction:

On page 69753, in the first column, under the heading ''**IV. Solicitation of Comments**'', in the last two lines, ''[insert date 21 days from date of publication]'' should read ''January 5, 2004''.

[FR Doc. C3–30838 Filed 1–20–04; 8:45 am]

BILLING CODE 1505–01–D

Federal Register

Wednesday,
January 21, 2004

Part II

Department of Transportation

Federal Aviation Administration

14 CFR Parts 21, 121, 135, 145, and 183
Establishment of Organization Designation Authorization Procedures; Proposed Rule

DEPARTMENT OF TRANSPORTATION

Federal Aviation Administration

14 CFR Parts 21, 121, 135, 145, and 183

[Docket No. FAA–2003–16685; Notice No. 03–13]

RIN 2120–AH79

Establishment of Organization Designation Authorization Procedures

AGENCY: Federal Aviation Administration (FAA), DOT.

ACTION: Notice of proposed rulemaking (NPRM).

SUMMARY: The FAA proposes to create an Organization Designation Authorization (ODA) program. This program would expand the approval functions of FAA organizational designees; standardize these functions to increase efficiency; and expand eligibility for organizational designees, including organizations not eligible under the current rules. In addition, as the FAA transitions to the ODA program, the agency would phase-out the Delegation Option Authorization (DOA), Designated Alteration Station Authorization (DAS), SFAR 36 authorization, and the Organizational Designated Airworthiness Representative (ODAR). These actions are necessary to provide the FAA with a more efficient process to delegate certain tasks to external organizations. The intended effect of these actions is to preserve and increase aviation safety.

DATES: Send your comments by May 20, 2004.

ADDRESSES: You may send comments (identified by Docket Number FAA–2003–16685) using any of the following methods:

- *DOT Docket Web site:* Go to *http://dms.dot.gov* and follow the instructions for sending your comments electronically.
- *Government-wide rulemaking Web site:* Go to *http://www.regulations.gov* and follow the instructions for sending your comments electronically.
- *Mail:* Docket Management Facility; U.S. Department of Transportation, 400 Seventh Street, SW., Nassif Building, Room PL–401, Washington, DC 20590–001.
- *Fax:* 1–202–493–2251.
- *Hand Delivery:* Room PL–401 on the plaza level of the Nassif Building, 400 Seventh Street, SW., Washington, DC, between 9 a.m. and 5 p.m., Monday through Friday, except Federal holidays.

For more information on the rulemaking process, *see* the **SUPPLEMENTARY INFORMATION** section of this document.

Privacy: We will post all comments we receive, without change, to *http://dms.dot.gov,* including any personal information you provide. For more information, *see* the Privacy Act discussion in the **SUPPLEMENTARY INFORMATION** section of this document.

Docket: To read background documents or comments received, go to *http://dms.dot.gov* or to Room PL–401 on the plaza level of the Nassif Building, 400 Seventh Street, SW., Washington, DC, between 9 a.m. and 5 p.m., Monday through Friday, except Federal holidays.

FOR FURTHER INFORMATION CONTACT: Ralph Meyer, Delegation and Airworthiness Programs Branch, Aircraft Engineering Division (AIR–140), Aircraft Certification Service, Federal Aviation Administration, 6500 S. MacArthur Blvd, ARB Room 304A, Oklahoma City, OK, 73169; telephone (405) 954–7072; facsimile (405) 954–4104, e-mail *ralph.meyer@faa.gov.*

SUPPLEMENTARY INFORMATION:

Comments Invited

The FAA invites interested persons to participate in this rulemaking by sending written comments, data, or views. We also invite comments about the economic, environmental, energy or federalism impacts that might result from adopting the proposals in this document. The most helpful comments reference a specific portion of the proposal, explain the reason for any recommended change, and include supporting data. We ask that you send us two copies of your written comments.

We will file in the docket all comments we receive, as well as a report summarizing each substantive public contact with FAA personnel about this proposed rulemaking. The docket is available for public inspection before and after the comment closing date. If you wish to review the docket in person, go to the address in the **ADDRESSES** section of this preamble between 9 a.m. and 5 p.m., Monday through Friday, except Federal holidays. You may also review the docket using the Internet at the Web address in the **ADDRESSES** section.

Privacy Act: Using the search function of our docket Web site, anyone can find and read the comments received into any of our dockets, including the name of the individual sending the comment (or signing the comment on behalf of an association, business, labor union, etc.). You may review DOT's complete Privacy Act Statement in the **Federal Register** published on April 11, 2000 (65 FR 19477–78), or you may visit *http://dms.dot.gov.*

Before acting on this proposal, we will consider all comments we receive by the closing date for comments. We will consider comments filed late if it is possible to do so without incurring expense or delay. We may change this proposal because of the comments we receive.

If you want the FAA to acknowledge receipt of your comments about this proposal, include with your comments a preaddressed, stamped postcard on which the docket number appears. We will stamp the date on the postcard and mail it to you.

Availability of Rulemaking Documents

You can get an electronic copy using the Internet by:

(1) Searching the Department of Transportation's electronic Docket Management System (DMS) Web page (*http://dms.dot.gov/search*);

(2) Visiting the Office of Rulemaking's Web page at *http://www.faa.gov/avr/arm/index.cfm*; or

(3) Accessing the Government Printing Office's Web page at *http://www.access.gpo.gov/su_docs/aces/aces140.html.*

You can also get a copy by sending a request to the Federal Aviation Administration, Office of Rulemaking, ARM–1, 800 Independence Avenue, SW., Washington, DC 20591, or by calling (202) 267–9680. Make sure to identify the docket number, notice number, or amendment number of this rulemaking.

Background

Legal Authority

Title 49 section 44702(d) of the United States Code provides that the Administrator may delegate to a qualified private person, or an employee supervised by that person, a matter related to the examination, testing, and inspection necessary to issue a certificate and the issuance of the certificate. The term ''private person'' means an individual or organization other than a governmental authority.

Under the statutory authority, the FAA has set up a delegation system to designate individuals and organizations to perform certain certification functions. Those holding these designations are commonly referred to as ''representatives of the Administrator'' and ''designees.'' When acting as representatives of the Administrator, designees are required to perform in a manner consistent with the policies, guidelines, and directives of the Administrator. When performing a delegated function, designees are legally distinct from and act independent of the organizations that employ them.

Regulations about individuals and organizations performing airman and aircraft certification functions have been promulgated in 14 CFR parts 21 and 183, and Special Federal Aviation Regulation (SFAR) 36.

Industry/FAA Working Group

The FAA established the Aviation Rulemaking Advisory Committee (ARAC) in January 1991 to provide a continuing mechanism to involve the public in the regulatory process (56 FR 2190, January 22, 1991; 59 FR 9230, February 19, 1993). One subject that ARAC addresses is aircraft certification procedures (57 FR 39267, August 28, 1992).

On March 29, 1993, the FAA established the Delegation System Working Group of ARAC (58 FR 16573) to examine one aspect of certification procedures. Specifically, the Delegation System Working Group was tasked with reviewing the current designee programs to determine what would improve the safety and the quality and effectiveness of the system. Also, the Working Group was tasked with recommending to the ARAC new rules, revised rules, and advisory, guidance, and other collateral materials (including legislative and training materials).

The FAA sought a recommendation for a comprehensive, up-to-date, systematic approach for delegating aircraft certification functions to both individuals and organizations. The expectation was the proposed approach would provide a smooth transition from the current designation system to the recommended system, and the recommended system would be compatible with similar aviation systems of other countries. The Delegation System Working Group members were directed to send their recommendations to the ARAC, which would determine whether to send them to the FAA.

On June 19, 1998, the FAA expanded the task of the Delegation Working Group (63 FR 33758, June 19, 1998) to include recommendations on designating organizational Designated Airworthiness Representatives (DARs) under § 183.33. Further, the expanded task included evaluation of organizations that would be designated to find compliance for issuing operating certificates under parts 133 and 137, air agency certificates under part 141, and training center certificates under part 142. The Working Group was also asked to review § 183.15 about the duration of designations under part 183.

The ARAC Delegation System Working Group sent a recommendation to the ARAC. The ARAC accepted the recommendation and gave it to the FAA. This proposed rule is based on this recommendation.

History

The present delegation system has evolved over many decades of aircraft certification experience and regulatory development.

In the mid 1940s the FAA's predecessor agency, the Civil Aeronautics Administration (CAA), set up programs to appoint designees to perform airman-, airworthiness-, and certification-approval tasks. These designee programs included the Designated Engineering Representative (DER), the Designated Manufacturing Inspection Representative (DMIR), and the Designated Pilot Examiner (DPE).

In the early 1950s, because of the rapidly expanding aircraft industry and limited CAA engineering and manufacturing resources, the CAA began Delegation Option Authorization (DOA) procedures (currently in part 21, subpart J) for performing aircraft certification functions. The DOA procedures facilitate certification of products manufactured by experienced, knowledgeable organizations. DOAs are granted to manufacturers after an evaluation of their engineering competency, facilities, personnel, and experience. DOAs may be used for certification and airworthiness approval of the products manufactured by the authorization holder.

During the mid 1950s, the CAA received many complaints from the aviation industry about delays in issuing supplemental type certificates (STCs) to approve major alterations. In cooperation with an industry committee representing modification facilities, the CAA studied these delays. The resulting recommendation was the delays could be decreased by allowing approved engineering staffs of repair stations to issue STCs. Amendment No. 21–6 (30 FR 11379, September 8, 1965) established the procedures for the Designated Alteration Station (DAS) in 14 CFR part 21, subpart M. This designation allows eligible air carriers, commercial operators, domestic repair stations, and manufacturers of products to issue STCs and related airworthiness certificates.

In the mid 1970s, the FAA conducted an operations review program to increase the agency's responsiveness to the needs of the public and the aviation community. While major alteration data could be approved using STCs issued under the DAS provisions of subpart M, similar provisions did not allow approval of major repair data. The FAA, therefore, issued SFAR 36 (43 FR 3085, January 23, 1978) to allow eligible air carriers, commercial operators, and domestic repair stations to develop and use major repair data without getting FAA approval.

During the 1980s, there was an increase in requests for FAA airworthiness certification functions. As a result, Amendment 183–8 (48 FR 16176, April 14, 1983) was adopted in 1983 to set up the Designated Airworthiness Representative (DAR) as a new category of designee. The rule authorized functions not previously covered in 14 CFR part 183. Also, § 183.33 allowed for the designation of organizations to serve as DARs. Such a designation is known as an Organizational Designated Airworthiness Representative (ODAR).

In the late 1990s, the FAA formed a team to consolidate FAA policies and procedures for DAS, DOA, and SFAR 36 authorization holders. The goal of the team was to standardize the selection, oversight, and certification processes of these designated organizations throughout the FAA. As a result, the FAA developed Order 8100.9, DAS, DOA, and SFAR 36 Authorization Procedures. The requirements of the Order will serve as the basis for managing future delegation efforts, including ODA.

The present system of designations of organizations (DOA, DAS, SFAR 36, and ODAR) has evolved over more than 40 years, during which organizational designations have gained specific experience in aircraft certification. The FAA's management and supervision of the designee system has ensured the system works well. Based on its decades of experience with the system, the FAA has determined the quality of approvals processed by these designee organizations equals those processed by the FAA. The designee system has continually improved procedures and has become essential to the certification system. These programs are examples of those that have continued under the FAA and that have been valuable to the agency and to the aviation industry. They have allowed the FAA to target its direct involvement to the most critical certification functions and provide timely services to the aviation industry, while assuring the airworthiness of aeronautical products.

Also, the FAA has delegated other functions about airmen and operations approvals. For example, the agency has authorized organizations to conduct the knowledge tests that lead to the certification of airmen (Computer Test Designee Program). Further, it has issued a number of Letters of Authorization and Memorandums of

Understanding to organizations for determining operational functions. Examples of related programs include—

- The Aerobatic Competency Evaluator Program that authorizes the International Council of Air Shows to conduct functions under 14 CFR part 91; and
- The National Designated Pilot and Designated Flight Engineer Examiners Program that authorizes the Experimental Aircraft Association to conduct functions leading to the certification of pilot and crew-member applicants in vintage aircraft under 14 CFR parts 61 and 63.

In addition, other operational functions have been authorized to help with FAA approvals in various specialized areas.

Delegation Holders Are Not Certificate Holders

Title 49 United States Code section 44702 provides the Administrator of the FAA with the authority to issue certificates (44702(a)) and to make delegations (44702(d)). Delegation holders have different rights than certificate holders. Specifically, a person who holds a delegation holds it at the Administrator's discretion. The Administrator may suspend or revoke the delegation at any time for any reason. This power is specifically described in section 44702(d)(2). By comparison, once a certificate is issued under the power of section 44702(a), that certificate holder has specific appeal rights external to the Administrator, which include a right to appeal an adverse decision to the National Transportation Safety Board (NTSB).

Unfortunately, some existing Federal Aviation Regulations use the term ''certificate'' to describe the document evidencing a delegation. For example, 14 CFR part 183 says a ''Certificate of Designation'' or a ''Certificate of Authority'' is issued to a person who receives a delegation. Although the term ''certificate'' is used to describe the document, the authority granted is a delegation by the Administrator under 44702(d), not a certificate issued under section 44702(a).

Because of the statutory structure, the authority granted to an ODA Holder under the proposed regulation will be a 44702(d) delegation, not a 44702(a) certificate. This authorization will be in the form of an ODA Letter of Designation. The authority of the Administrator to suspend, revoke, or withhold issuance of the delegations will not be subject to appeal to the NTSB. The procedures used to determine whether delegations will be made, suspended, or revoked will be controlled by administrative procedures set up by the Administrator under the applicable Order.

The Need for Regulatory Change

The FAA's designee management system is essential to the FAA's safety management system and the certification procedures within that system. The designee system enables the FAA to meet its safety requirements and responsibilities and provide timely certification services. Delegating FAA authority to designees maximizes FAA participation in certification projects and allows the FAA to focus on critical safety areas.

Through the designee system, the FAA can focus resources on new applications of existing technology, on new and evolving technologies, and on the growth in the aviation industry as a whole. By consolidating designee programs, the agency can further its standardization efforts and use the resources of the aviation industry more effectively.

There are several factors that are beginning to affect the certification process. FAA workload continues to increase because of increased requests for services and increased levels of complexity in the products being introduced in the aerospace market. Also, the FAA has focused its resources toward continuing the operational safety of in-service products, and developing regulations and airworthiness standards necessary to increase the level of safety. The net effect is a decrease in FAA capacity to perform certification of products or other certificate holders. In combination, these factors have made it more difficult for the FAA to provide timely services to its customers.

A report issued by the United States General Accounting Office (GAO), entitled ''Aircraft Certification: New FAA Approach Needed to Meet Challenges of Advanced Technology'' (GAO/RCED–93–155, September 1993), states that since the late 1950s, official estimates show a fivefold increase in the work needed to certificate a new aircraft. During this same period, the FAA's workload increased in areas such as monitoring already certificated aircraft, issuing airworthiness directives, and developing new regulations and policies. With the rise in workload, the FAA's dependence on the designee system has increased. This is particularly true for the certification of new, advanced-technology aircraft software and computer systems.

The report entitled ''Challenge 2000: Recommendations for Future Aviation Safety Regulations'' prepared for the FAA by Booz-Allen and Hamilton, Incorporated (April 1996), lends support to enhancing the designee program. The report states given the increasing complexity in aircraft manufacturing and maintenance, and in airline operations, ownership, and services, when Federal government resources are being constrained, the FAA must find a means to ''do more with less.'' One of the resources available to the FAA involves working in concert with industry and improving the designation process to make it more effective; this would, in turn, provide industry with needed flexibility to manage its affairs more efficiently. It would also allow the FAA to focus on safety-critical issues.

In response to issues raised in these reports and in recognition of the environment that led to their publication, the FAA determined that the designee program would be further improved by expanding the eligibility for qualified organizations. Currently, a designated organization must hold some type of FAA certificate, such as a repair station or manufacturer approval. The proposal will allow qualified organizations without FAA certificates to be eligible for certain designations. Also, the current rules are limited in what functions may be delegated. The proposal will allow the FAA to delegate functions it considers necessary to qualified organizations. This expansion would reduce the time and cost of the certification process.

These added designations and delegated functions would benefit general aviation operations because these operations are widely varied and specialized. For example, agricultural aviation is one area where delegation to conduct inspections and issue operating certificates would benefit the FAA and industry. Operators associated with the agricultural aviation industry tend to remain in the industry, and little of that expertise finds its way to the FAA ranks. By allowing delegations in this area, the FAA could benefit from this expertise.

Added benefit is gained by appointing organizations rather than individual designees. Organizational designees are managed using a systems approach, which relies on the experience and qualifications of the organization, approval of the procedures used by the organization and oversight of the functions the organization performs. Thus, the FAA can focus on that organization's delegated functions as one system, rather than concentrating on monitoring and supervising individual designees. Such partnerships with industry leverage the abilities of industry and maximize the effectiveness

of the certification process for both the FAA and the organization.

Increasing the number of delegations to organizations will also help prepare industry and the FAA for future certification programs, which may include the Certified Design Organization. Certified Design Organizations were authorized in section 227 of the FAA reauthorization bill-Vision 100—Century of Aviation Reauthorization Act. Under the Certified Design Organization concept, manufacturers would be responsible for ensuring the systems they design and manufacture comply with all FAA requirements. The FAA would rate qualified certificate holders according to their experience and allow them to make the approvals necessary for the certification of the projects they manufacture. The system management concepts implemented under ODA could serve as a basis for the structure and management of the Certified Design Organizations.

In summary, the designee system allows the FAA to maintain the highest level of safety by performing certification services. Through the designee system, the FAA can focus on safety critical issues and its core workload of continued operational safety and regulatory development. By expanding organizational designee programs, the agency can further its standardization efforts and use resources more effectively.

General Discussion of the Proposed Rule

The proposed rule would standardize the duration of certificates for aircraft certification and flight standards individual designees. The designation of individuals would continue under the authority of part 183, subparts B and C. The proposal would create a new subpart D in part 183 that would contain one set of rules to apply to all types of organizational designees. The proposed rule would replace the existing DAS, DOA, SFAR 36, and ODAR delegation programs with a new delegation program for organizations. Accordingly, subparts J and M of part 21, and SFAR 36 would be phased out.

The proposed designation would be called an Organization Designation Authorization (ODA). The ODA would typically include an ODA Unit and an ODA Holder. The ODA Unit would be an identifiable unit of two or more individuals within an organization that performs the functions on behalf of the Administrator. The ODA Holder would be the parent organization that the FAA grants an ODA Letter of Designation. A common misconception is a designated organization and its parent certificate holder are the same entity. The proposal specifies separate requirements for the designee organization (ODA Unit) and the parent organization (ODA Holder).

Because there will be no eligibility requirement that an applicant hold any FAA certificate, consultant-type groups of engineering and inspection personnel could form an organization, which would be eligible for an ODA. In this situation, it is possible the ODA Holder would be made up entirely by the ODA Unit. The individuals within an organization can perform functions both on behalf of the ODA Unit (as an FAA authority) and the ODA Holder.

The proposal would allow the FAA to delegate aircraft certification approval functions to qualified organizations other than manufacturers, air carriers, commercial operators, or repair stations. The proposal would make organizations that have demonstrated competence, integrity, and expertise in aircraft certification functions eligible for an ODA. More qualified organizations would be eligible for designations to perform airmen and general aviation operations functions discussed in the paragraphs that follow.

The proposal also expands the designee system to delegate more functions related to aircraft certification and new functions pertaining to certification and authorization of airmen, operators, and air agencies. For general aviation operations, the proposed rule would allow designated organizations to issue airman certificates or authorizations under 14 CFR parts 61, 63, and 91. Additionally, the proposed rule would allow designated organizations to find compliance or conduct functions leading to the issuance of certificates or authorizations for—

- Parachute jumping operations under 14 CFR part 105;
- Rotorcraft external load operations under 14 CFR part 133;
- Agricultural operations under 14 CFR part 137;
- Air agencies operations under 14 CFR part 141; and
- Training centers operators under 14 CFR part 142 (air carrier functions excluded).

The proposed rule would contain general requirements to provide flexibility for FAA delegation programs. The proposal allows for future expansion of the designation of organizations and the delegation of functions without further rulemaking. Because every type of delegated function that could be performed by an ODA Unit cannot be foreseen, it is not possible to specify in the regulation all areas in which an ODA Unit may perform. So, specific functions that may be delegated and the eligibility requirements for those functions would be described in the associated FAA Order. The Order also addresses the specific selection, appointment, and oversight procedures the FAA will follow to manage these designations. You may get a draft of this Order, entitled Organization Designation Authorization Procedures, from the Internet at *http://av-info.faa.gov/dst/oda.*

The proposed rule provides safeguards to ensure the integrity of the ODA Holder. The proposal requires the ODA Holder to perform self-audits and ensure that no one interferes with individuals performing functions for the FAA. These terms are in addition to current authorization requirements for procedures manuals, recordkeeping, inspections, and data review if an airworthiness problem or unsafe condition occurs. ODA Holders would also be required to cooperate with the FAA in its audit, oversight, and surveillance of their facilities.

The proposal requires the ODA Unit to function as an identifiable unit when performing FAA functions. The proposal does not specify requirements for the structure of the organization. But the structure must ensure the ODA Unit members have enough authority and independence to perform their delegated function without interference. The organizational structure of the existing delegations vary from integrated organizational structures with a matrix-type relationship, which DOAs have successfully employed for many years, to ''stand-alone'' organizations performing the delegated functions. Under this proposal, the FAA will continue to allow similar variations in structure. Consultants may serve on the ODA Unit as needed. This proposal would require these individuals to be made part of the ODA Unit before they perform activities on behalf of the ODA Unit.

The ODA Holder is ultimately responsible for the functions performed by the ODA Unit. The procedures that the ODA Unit and ODA Holder follow would be identified in the procedures manual. The administration of the ODA Unit would be independent of other parts of the organization whose work the ODA Unit is reviewing and, therefore, the ODA Unit may not be subjected to pressure by any other part of the organization.

The FAA intends to evaluate the performance of the ODA Holder and ODA Unit, using the management principles originally established under

Order 8100.9, DAS, DOA and SFAR 36 Authorization Procedures. The FAA does not intend to focus on the activities of individuals but will focus instead on the performance of the ODA Holder's system and how the functions are carried out. The FAA always retains the authority to monitor and supervise the ODA Unit to the extent necessary to ensure that the designee functions are carried out properly. For example, an individual may be removed from a designee function to correct any deficiency.

Organizations that currently have individual designees could—

- Continue to use only these designees and operate under standard certification procedures;
- Choose to operate under an ODA rather than use individual designees; or
- Operate under both systems (but not on the same project or program), depending on the certification needs of the organization and the regulatory needs of the FAA.

Organizations that get ODAs would be expected to surrender a significant number of individual designees. Even those organizations that operate under both ODA and standard certification procedures in the future would need a much smaller number of individual designees. The FAA envisions that the functions most designees employed by the organization perform would be done under the auspices of the ODA system. This is necessary to reduce the FAA's administrative burden associated with managing individual designees.

The FAA does not intend to issue authorizations to all qualified organizations that might apply for an ODA. The FAA will issue authorizations only if it has resources to manage the organization and only if the designation will benefit the FAA and the public. Like all designations, the proposed ODA designations may be revoked or canceled at any time for any reason the Administrator considers proper.

Although the FAA is proposing to expand the delegation system to include organizations that are not eligible under current rules, the proposed system would not dramatically increase aircraft-approval-related delegations. Except for the general aviation operations functions, and certain aircraft-approval-related functions, most of the functions are already delegated to either individuals or organizations. The FAA expects that most ODAs will be issued to existing DAS, DOA, SFAR 36, and ODAR organizations, and other organizations currently authorized to perform delegated functions.

Transition to ODA Procedures

No new DAS, DOA, SFAR 36, or ODAR applications would be accepted after the date the final rule is published. Existing DAS, DOA, SFAR 36, and ODAR designations would need to reapply under part 183, subpart D for an ODA. This will allow the FAA to determine if each applicant meets all the requirements of the ODA regulations, such as the requirements for the procedures manual. To allow for an orderly transition from the current designation system to an ODA, the FAA proposes a transition period of 3 years to begin on the date the final rule is published. At the end of the 3 years, current subparts J and M of part 21 would be terminated. SFAR 36 would terminate 3 years after the publication date of the final rule. Also, all DAS, DOA, SFAR 36, and ODAR designations would be terminated.

Current DASs, DOAs, SFAR 36s, and ODARs would need to apply for an ODA as soon as possible after the publication date of the final rule to allow time for the FAA to review their applications, draft procedures manuals, and other materials. Other qualified organizations may apply for an ODA after publication of the final rule. The FAA's main priority during the 3-year transition period would be to manage the transition of the existing authorizations to ODAs. Other applications would be processed as FAA resources allow.

The Proposed Rule—Section-by-Section

Part 21, Subparts J and M; SFAR 36

Sections 21.230, 21.430, and section 4 of SFAR 36 would fix a date after which applications for DAS, DOA, or SFAR 36 authority would no longer be accepted. Sections 21.230 and 21.430 would prohibit performing DAS and DOA functions under those authorizations after 3 years from the publication date of the final rule. Section 4 of SFAR 36 sets the expiration date of the SFAR at the same 3-year date. Existing DASs, DOAs, SFAR 36s, and ODARs must convert to an ODA system within 3 years after the date the final rule is published to maintain their delegated authority.

For further discussion of the transition period for existing authorizations, see the section immediately preceding this one entitled ''Transition to ODA Procedures.''

Section 183.1 Scope

The current § 183.1 refers to ''designating private persons.'' As defined in The Federal Aviation Regulations, ''person'' can refer to an individual or various types of organizations (14 CFR 1.1). Section 183.1 would be revised to reflect that subparts B and C would cover designations of private individuals, while new subpart D would cover private organizations.

Section 183.15 Duration of Certificates

Currently, the duration of certificates for individual designees under part 183 varies. For Aircraft Certification and Flight Standards designees, the FAA proposes to amend § 183.15(b) to state that the designations are effective until the expiration date shown on the Certificate of Authority. This is the same system currently used for DARs. The appointing office may set a period of 1 to 5 years, depending on the experience and track record of the individual. The specific instructions for the appointing office would be detailed in the associated FAA Order.

Section 183.41 Applicability and Definitions

This section begins the proposed new subpart D that would apply to any organization that seeks an ODA to perform functions leading to certification or authorization in the areas of engineering, manufacturing, operations, airworthiness, and maintenance. This section introduces the subpart and contains definitions for terms used in subpart D.

Section 183.43 Application

This section describes the application process and prescribes the application contents. The specific application form, content, instruction, and processes would be provided in the associated FAA Order.

Section 183.45 Issuance of Organization Designation Authorizations

This proposed section states the Administrator may issue an ODA Letter of Designation if the Administrator finds the applicant complies with applicable requirements of this subpart and there is an FAA need for the functions requested. The proposed section incorporates what is implicit in 49 U.S.C. 44702(d) that the designation is at the Administrator's discretion. There would be no assurance that qualified applicants would receive a designation. Designations would be issued when they benefit the FAA and the public.

The ODA Letter of Designation would identify the authorized functions and limitations; and, as applicable, list the categories of products, components, parts, appliances, and ratings, which may be approved under the designation. The list could be a general list of

products, components, parts, appliances, and ratings, authorized under the ODA, or it could be more specific, such as a listing of specific Technical Standard Order items.

Section 183.47 Eligibility

The FAA proposes that only applicants within the United States that have enough experience using standard certification procedures or are current designation holders would be eligible for an ODA. Oversight of non-U.S. activities would be unduly burdensome to the FAA.

The proposed eligibility requirements in paragraph (b) would include all persons who are now eligible under subpart J or subpart M of part 21 or under SFAR 36, and would expand the eligibility to include STC (supplemental type certificate) holders.

Under proposed § 183.47(b)(6), an applicant that has not been issued one of the certificates or authorizations listed would be eligible for an ODA if the applicant has enough experience and proper experience in performing the functions sought. This allows the FAA to issue ODAs to any qualified organization. The specific qualifications and experience requirements for specific designations and functions would be described in the associated FAA Order.

Proposed § 183.47(c) applies to any applicant seeking a designation for a production system. Experience in production is necessary to demonstrate the ODA applicant's production competence. Applicants in this category would have to demonstrate experience in both design approval and production approval.

Proposed § 183.47(d) would clarify that for purposes of this section, specifically 183.47(b)(1), standard procedures would not include transfers and licenses issued under part 21 and approvals based on identicality covered under § 21.303(c)(4). Thus, certificates used to establish eligibility must have been issued to the applicant by the FAA. The certificates could not have been obtained by transfer from another party, or in the case of Parts Manufacturer Approvals (PMA), could not have been obtained based on findings of identicality.

Section 183.49 Authorized Functions

Under proposed § 183.49(a), the authorized functions are dependent on the qualifications and experience of the applicant, and an ODA Unit is allowed to perform only those functions specifically authorized by the FAA Administrator.

Current designation regulations and functions are specific to the type of authorization and provide specific procedures that the authorized person must follow. To simplify the regulations and maintain greater flexibility, the proposed rule would remove specific details, which would instead be contained in the associated FAA Order and in the applicant's procedures manual.

Proposed § 183.49(c) states that the ODA functions are based on finding compliance with the applicable regulations ''of this chapter,'' which refers to the Federal Aviation Regulations in 14 CFR parts 1–199. The proposed list of functions include, among others, approving technical data, finding compliance with airworthiness requirements, and approving or accepting manuals and changes or supplements to manuals. Many of these listed functions are now allowed under current designation regulations. Paragraph (c)(1) lists approving technical data and changes to such data as one of the functions that may be granted; these data refer not only to data associated with aircraft certification functions, but they also refer to data relevant to flight standards and maintenance functions. Proposed paragraph (c)(6) lists ''approving or accepting manuals and changes/supplements to manuals'' (*e.g.,* maintenance manuals and operations manuals).

General aviation operations functions are listed in § 183.49(c). Included are functions leading to certification authorization for parachute jumping operations, external load operators, and agricultural aircraft operators under parts 105, 133, and 137, respectively. Also included are functions for air agencies under part 141, training centers under part 142 (for non-air carriers), and pilots and crewmembers under parts 61, 63, and 91. ODA Holders in these areas would provide initial evaluations and briefings for applicants, review manuals and procedures, inspect facilities, conduct knowledge and skill tests (as appropriate), conduct conformity inspections (as required), and complete the proper certification reports required in the certification process.

Functions currently authorized for individuals to perform would be available to ODA Holders. For example, issuing pilot certificates and authorizations, to include authorizations to conduct aerobatic maneuvers in wavered airspace, Letters of Authorization (LOA) to operate aircraft for which no type designation exists, and evaluation authority to issue additional pilot ratings or certificates.

The proposed list of functions is not meant to cover all possible functions. Proposed § 183.49(c)(15) would allow delegations for other functions considered proper by the Administrator. This would allow the Administrator to authorize added functions, if appropriate, based on the applicant's qualifications and experience. The associated FAA Order would provide a matrix of options for functions that an organization may request authority to perform based on the organization's qualifications.

The FAA has determined that certain functions will not be delegated at this time because they are reserved for the FAA to perform or because experience should be gained with the new delegation system before expanding it to include these functions. The list that follows identifies those areas where the FAA would reserve the functions to itself. The proposed ODA system would allow future delegations in some of these areas if judged proper. Currently, delegation to ODAs would not be considered for—

- Finding compliance for issuing repair station certificates under part 145;
- Finding compliance for issuing training center certificates under part 142 for approval of air carrier training programs;
- Issuing a Type Certificate and an amended Type Certificate;
- Issuing a Production Certificate;
- Approving quality assurance procedures and manuals;
- Issuing a Parts Manufacturer Approval (PMA);
- Making certain findings for issuing a design or a production approval (*e.g.*, establishing the certification basis or special conditions, establishing means of compliance not previously accepted by the FAA, and determining equivalent level of safety);
- Determining operational suitability (Flight Standardization Board);
- Approving Master Minimum Equipment List;
- Approving Air Carrier Minimum Equipment List;
- Approving air carrier flight crew operating manuals; and
- Approving air carrier instructions for continued airworthiness, which includes Maintenance Review Board (MRB) and associated maintenance documents.

The issuance of certain certificates may also involve both discretionary and ''objective'' findings. Thus, the FAA would limit ODA Unit findings of compliance for issuing parts 133, 137, 141, and 142 certificates to those that are objective.

Additionally, there is no regulatory basis for designees to perform rulemaking activity or FAA oversight of certificate holders or other designees. Therefore, ODA will not allow delegation of any of the following:

- Issuing an Airworthiness Directive (AD).
- Issuing an exemption.
- Conducting surveillance and oversight.

Section 183.51 Personnel

The proposed personnel requirements of § 183.51 would call for each ODA applicant to have within its ODA Unit a qualified ODA administrator(s) and staff. The staff for aircraft-approval-related functions would be required to meet the same requirements as individual designees that perform similar functions. Examples include the following:

- ODA Unit personnel making findings of compliance or approving technical data would have to meet the same qualification requirements as a DER.
- Organizations seeking general aviation operations functions would need individuals who have worked as an operator, have held positions required by the FAA that directly relate to the activity the ODA Unit would perform, or have worked for organizations that hold one or more of the certificates listed in § 183.47(b).
- ODA administrators would need 5 years of experience working with the FAA on similar projects as those approved under the ODA and a comprehensive knowledge of related FAA regulations and procedures.
- Both ODA administrators and staff would need to demonstrate integrity and a cooperative attitude with the FAA. The specific administrator and staff eligibility requirements are contained in the draft ODA Order and Order 8100.8, Designee Management Handbook.
- ODA Holders performing operations functions leading to certifications or authorizations under parts 61, 63, 105, 133, 137, 141, and 142 would need to employ qualified, experienced individuals who have held positions in areas directly related to the activity or function to be performed by the ODA Unit.

Section 183.53 Procedures Manual

The proposed rule would require an ODA Holder to have an FAA-approved procedures manual, containing at least the material specified in § 183.53. The procedures manual would specify the authorized functions and limitations of the organization and prescribe the procedures used to perform the authorized functions. The FAA must approve changes to the procedures manual before implementation. As discussed in the following section, the procedures manual is also important in identifying the scope of the ODA Unit's function.

Section 183.55 Limitations

Proposed § 183.55(a) limits the authority of the ODA Unit to the certification and approval functions defined in its approved procedures manual. Any change in limitations or functions desired by the ODA Holder must be approved by the FAA and incorporated into the procedures manual before the ODA Unit may perform the function. Limitations will be defined based on the experience and knowledge of the ODA Holder and ODA Unit.

Proposed § 183.55(b) states the ODA Unit may not perform a function if there is a change in the Unit or Holder that might affect its ability to perform that function. Changes that might affect performing a function must be approved by the FAA and documented in the procedures manual. For example, for ODA Units performing production functions (*e.g.,* conformity inspections, issuance of airworthiness certificates, export, etc.), FAA approval of a change in facilities would be required. The proposal, however, does not require that every change in the location of facilities or organizational structure of every ODA Holder and ODA Unit be approved. Rather, under § 183.53(l), the ODA Holder's procedures manual would show what changes can be made without prior FAA approval. These would be changes that do not affect its qualifications to perform a function. For example, an ODA Unit could continue to perform authorized functions after a minor change in organizational structure if it met the requirements set forth in its procedures manual.

Proposed § 183.55(c) states that an ODA Unit may not issue a certificate or other approval for which a finding of the Administrator is required, such as equivalent level of safety findings, until the Administrator makes that finding. An ODA Holder needs to be aware of the limits of its authority and of the obligation to get necessary approvals from the FAA before exercising its authorized function.

Under proposed § 183.55(d) an ODA Unit would also be subject to any other limitations specified by the Administrator. For example, the ARAC recommendation was to not list the names of ODA Unit staff members in the ODA procedures manual but, instead, identify the positions and qualifications of these staff members. The ARAC proposed that the procedures manual would describe how to maintain and remove the names of the staff members, but the names would be maintained in a file separate from the procedures manual. The ARAC anticipated the staff-member file could be updated without letting the FAA know. The FAA disagrees with the last part of the ARAC recommendation and would continue (as in the current delegation systems) to require FAA approval of ODA Unit staff changes. ODA Unit staff members could be identified in a file separate from the procedures manual. The FAA determined that continuing to approve staff members would enable the agency to gain experience working with these organizations while developing and assessing the systems approach to management of the organizations. The FAA expects that, in the future, qualified ODA Holders will be allowed to make ODA Unit staff changes without FAA involvement, but the FAA would still require notice of staff changes. Although the FAA is not specifically proposing rule language for this requirement, the FAA intends to implement it under § 183.55(d).

Section 183.57 Responsibilities of an ODA Holder

Proposed § 183.57 would show certain responsibilities of an ODA Holder. In effect, when performing the authorized functions, the ODA Unit represents the FAA within the organization. As such, employees performing the designated functions specified in the FAA-approved procedures manual would report to the ODA administrator(s) when performing FAA functions.

Clearly, personnel performing ODA functions must have organizational authority and independence to ensure that authorized functions are performed according to FAA requirements. While performing authorized functions, an ODA Unit within an organization would report to a level of management high enough to enable the ODA Unit to operate without pressure or influence from other organizational segments or individuals. The ODA Unit must be free of conflicting restraints that would limit the ODA Holder's ability to ensure that authorized functions are performed in compliance with FAA regulations. The ODA Holder would also be responsible for cooperating with the FAA during the FAA's audit, oversight, and surveillance activities.

Section 183.59 Continued Eligibility

Proposed § 183.59 would require the ODA Holder to notify the FAA of any change that could affect its ability to meet the requirements of the regulations. For example, if its ODA administrator were to leave the organization, the ODA Holder would have to notify the FAA. The specific changes that require notice would be determined by the types of functions the organization is authorized to perform, and the basis of the organization's eligibility.

Section 183.61 Inspection

The proposed language would require both ODA Holders and applicants to allow the FAA to make any inspection necessary to determine compliance with the regulations. Applicants may be inspected as part of evaluating their application. ODA Holders would have to provide access for the FAA to perform on-site evaluations of the ODA Holder, as the FAA considers necessary.

Section 183.63 Records and Reports

Proposed § 183.63 would require an ODA Holder to maintain and make available certain records. The required records depend on the ODA Holder's specific authority and the work performed under that authority.

Proposed § 183.63(d) would require an ODA Holder and ODA Unit under this part to make such reports that are prescribed by the Administrator. The specific reports would be described in the associated FAA Order.

Section 183.65 Data Review and Service Experience

Proposed § 183.65 would require an ODA Unit to investigate safety concerns it or the FAA identifies. The FAA would require that such investigations take priority over all delegated functions performed by the organization. Additionally, the ODA Unit must provide the FAA with any information in its possession that is necessary to implement corrective action. These responsibilities for safety concerns apply to all approvals and certificates issued by the ODA Unit. This would also apply to certificates and approvals the ODA Unit transfers to other persons.

Section 183.67 Transferability and Duration

Proposed § 183.67(a) states that an ODA Letter of Designation is not transferable and is effective until the expiration date shown on the Letter of Designation. Proposed § 183.67(b) states the circumstances for which an ODA is terminated or suspended. This proposed language is substantively the same as the termination and suspension rules for individual designees. The associated FAA Order will describe some of the reasons for which the FAA might terminate or suspend an ODA. The reasons include improper performance; lack of care, poor judgment, or lack of integrity; lack of FAA need or ability to manage; insufficient activity; and lapse of qualifications. The Order will also outline a means for the ODA Holder to appeal a termination or suspension decision. The right to appeal depends on the reason for the termination or suspension. *See* the associated draft FAA Order for more information.

Paperwork Reduction Act

This proposal contains the following new information collection requirements. As required by the Paperwork Reduction Act of 1995 (44 U.S.C. 3507(d)), the Department of Transportation has sent the information requirements associated with this proposal to the Office of Management and Budget for its review.

Title: Establishment of Organization Designation Authorization Procedures.

Summary: This proposal requires the creation of an Organization Designation Authorization (ODA) program. This program would expand the approval functions of FAA organizational designees; standardize these functions to increase efficiency; and expand eligibility for organizational designees, including organizations not eligible under the current rules. In addition, as the FAA transitions to the ODA program, the agency would phase-out the Delegation Option Authorization (DOA), Designated Alteration Station Authorization (DAS), SFAR 36 authorization, and the Organizational Designated Airworthiness Representative (ODAR).

Use of: The information in this proposal is required to establish the qualifications of prospective applicants and to manage the activities of organizations authorized as Organization Designation Authorization Holders. Reporting and recordkeeping requirements are necessary to manage the various approvals issued by the organization and to document approvals issued that must be maintained to address any future safety issues.

Respondents (including number of): The likely respondents to this proposed information requirement are organizations and companies within industry that desire the authority to make approvals on behalf of the FAA. During the initial 3-year period, it is expected that about 60 applications per year will be processed. We expect about 10 per year after the initial 3-year period.

Frequency: After initial application and authorization, the frequency of submittals will be dependent upon the type of authority granted by the FAA. Recurrent information requirements are based on the approvals issued by the organization and changes to the authorization desired by the authorization holder.

Annual Burden Estimate: We estimate the proposed rule imposes an annual public reporting burden of $235,840 based on 4288 hours at $55.00 per hour. The estimated recordkeeping costs are $161,700, based on 2940 hours at $55.00 per hour. Both of these cost estimates are based on clerical, technical, and overhead expenses.

Estimates of the burden created by the rule are based on the following: The rule will phase-out over 3 years the existing Designated Alteration Station and Delegation Option Authorization rules contained in subparts J and M of part 21, as well as Special Federal Aviation Regulation No. 36. The collection and recordkeeping requirements imposed by those rules will transition to the requirements contained here over the initial 3-year period. In addition, existing Organization Designated Airworthiness Representatives that are currently managed under part 183 will also be converted to Organization Designation Authorization over the initial 3-year period. As a result, the initial 3-year burden will be large, with a smaller burden over the life of the program. It is expected that about 180 applications will be processed within the first 3 years of the program, with an estimated 10 more applications being submitted per year over the life of the program.

The annual cost to the Federal government to analyze and process the information received is estimated to be $69,300 per year. This estimate is based on 1260 hours at $55.00 per hour.

The agency is seeking comments to—

(1) Evaluate whether the proposed information requirement is necessary for the proper performance of the functions of the agency, including whether the information will have practical utility;

(2) Evaluate the accuracy of the agency's estimate of the burden;

(3) Enhance the quality, utility, and clarity of the information to be collected; and

(4) Minimize the burden of the collection of information on those who are to respond, including responses through the use of proper automated, electronic, mechanical, or other technological collection techniques, or other forms of information technology.

Individuals and organizations may send comments on the information collection requirement by March 22, 2004, and should direct them to the address listed in the **ADDRESSES** section of this document.

According to the regulations, implementing the Paperwork Reduction Act of 1995 (5 CFR 1320.8(b)(2)(vi)), an agency may not conduct or sponsor, and a person is not required to respond to, a collection of information unless it displays a currently valid OMB control number. The OMB control number for this information collection will be published in the **Federal Register**, after the Office of Management and Budget approves it.

International Compatibility

In keeping with U.S. obligations under the Convention on International Civil Aviation, it is the FAA's policy to comply with International Civil Aviation Organization (ICAO) Standards and Recommended Practices to the maximum extent practicable. The FAA determined that there are no ICAO Standards and Recommended Practices that correspond to these proposed regulations.

Economic Evaluation, Initial Regulatory Flexibility Determination, International Trade Impact Assessment, and Unfunded Mandates Assessment

Proposed changes to Federal regulations must undergo several economic analyses. First, Executive Order 12866 directs that each Federal agency shall propose or adopt a regulation only upon a reasoned determination that the benefits of the intended regulation justify its costs. Second, the Regulatory Flexibility Act of 1980 requires agencies to analyze the economic effect of regulatory changes on small entities. Third, the Trade Agreements Act (19 U.S.C. 2531–2533) prohibits agencies from setting standards that create unnecessary obstacles to the foreign commerce of the United States. In developing U.S. standards, this Trade Act requires agencies to consider international standards and, where appropriate, that they be the bases of U.S. standards. Fourth, the Unfunded Mandates Reform Act of 1995 (Pub. L. 104–4) requires agencies to prepare a written assessment of the costs, benefits, and other effects of proposed or final rules that include a Federal mandate likely to result in the expenditure by State, local, or tribal governments, in the aggregate, or by the private sector, of $100 million or more annually (adjusted for inflation).

In conducting these analyses, the FAA has determined that this proposed rule: (1) Would generate benefits that justify its costs and would not be ''a significant regulatory action;'' (2) would not have a significant impact on a substantial number of small entities; (3) would have little effect on international trade; and (4) would impose no unfunded mandates on State, local, or tribal governments, or on the private sector. These analyses, contained in the *Initial Regulatory Evaluation, Regulatory Flexibility Analysis, Trade Impact Assessment, and Unfunded Mandates Act Determination for Proposed Rule: Establishment of Organization Designation Authorization Procedures,* which is available in the docket, are summarized as follows.

Request for Comments

The FAA requests comments on its assumptions, methodology, and data used in its economic analyses. The FAA also requests that commentators provide data with supporting documentation for their comments.

Costs

The potential costs of compliance with the proposed rule would occur because the proposed requirement that all organizational designation authorizations under part 21, subparts J or M, or under part 121, SFAR 36, or under part 183 would end within 3 years of the publication date of the final rule. As a result, the costs of compliance would be the added (or incremental) costs required for a company or an organization to apply for and to operate an ODA above the costs required for it to operate its existing designation authorizations. These costs would be both initial (first-year) costs and annual (recurring) costs.

To estimate the potential costs, the FAA used a telephone survey of 8 of the 21 programs that volunteered to participate in the DDS (an acronym taken from *D*OA, *D*AS, and *S*FAR 36) program developed under Order 8100.9. As the DDS program was developed to closely model the proposed ODA program, the FAA assumed the experiences of these DDS participants would likely model the experiences of future ODA programs. These DDS participants have voluntarily experienced the initial compliance costs involved in setting up their programs. However, as the DDS program has not become active at this time, these DDS participants have not experienced the annual compliance costs but did provide anticipated estimates based on their experiences with their existing designation programs. In addition, as there are no ODAR programs in the DDS program, the FAA could not use the DDS participant estimates to proxy the compliance costs for ODAR programs. Rather, the FAA used its knowledge and expertise to develop compliance cost estimates for the ODAR programs.

Compliance costs would vary across companies depending upon the amount of activity that would be administered by the ODA, the size of the company, and the extent to which the existing designated procedures, personnel, and systems would already meet the proposed ODA requirements. Based on the telephone survey, the FAA determined that the larger the DOA, DAS, and SFAR 36 program, the higher the cost would tend to be. The FAA then assumed that a similar result would occur for ODAR programs. On that basis, the FAA estimated the cost impact of an average ''large'' ODA program and an average ''small'' ODA program. The FAA then assumed that a company with an existing designation authorization having more than 1,500 employees would typically have a large ODA program, while one with fewer than 1,500 employees would typically have a small ODA program. Thus, the FAA classified the existing designation authorization programs into the following four general categories. The first category is large DOA, DAS, and SFAR 36 programs (assumed to have an average of 20 ODA personnel). The second category is small DOA, DAS, and SFAR 36 programs (assumed to have an average of 10 ODA personnel). The third category is large ODAR programs (assumed to have an average of 10 ODA personnel). The fourth category is small ODAR programs (assumed to have an average of five ODA personnel).

The primary costs of compliance would result from the number of labor hours of engineers/administrators necessary to meet various proposed requirements. On that basis, the estimated number of additional hours for each of the several requirements in the proposed rule that the DDS participants pointed out would involve incremental costs by type of current designation and by size of designation activity are contained in Table 1. The paragraphs following Table 1 briefly explain these estimated hours. A more complete discussion is found in the *Initial Regulatory Evaluation.*

TABLE 1.—INITIAL NUMBER OF ADMINISTRATIVE HOURS PER COMPANY BY TYPE OF CURRENT DESIGNATION AUTHORIZATION AND BY SIZE OF OPERATION

Type of initial activity	Large non-DDS participant	Small non-DDS participant	Large ODAR	Small ODAR
Revise Procedures Manual	40	20	16	12
Revise Recordkeeping System	4	4	4	4
Initial Employee Instruction	40	20	20	10
FAA Application	26	16	14	14
ODA Administrator Travel	8	8	8	8
Total	118	68	62	48

All the DDS participants reported that their procedures had followed accepted industry practices and did not need to be changed for the DDS program. However, the manuals had to be rewritten into the FAA-approved format and this entailed rewriting and then checking to be certain that the rewrite had not inadvertently introduced potential errors into the procedures. Clearly, then, the more procedures involved, the more time required for the rewrite. Thus, the number of hours would tend to vary with the size of the ODA program.

The number of hours to review the recordkeeping system was determined not to vary very much with the size of the records because it would be a record system review and not a review of each individual type of record.

The number of hours for the initial ODA employee instruction was based mainly on training the employees on the new formats and forms rather than on learning new technical procedures. On that basis, the FAA estimated that this initial training would take 2 hours per ODA employee, which, when multiplied by the average number of ODA employees, produces the estimated number of hours in Table 1.

The number of hours to apply for an FAA approval was based on the size and complexity of the ODA program. These estimates included the number of engineering/administration hours needed to respond to likely FAA questions concerning the program after the initial application was made.

Finally, the proposed FAA Order requires an ODA administrator to attend an ODA Standardization class that would be given by the FAA. The FAA assumed that this would be a class that would require the ODA administrator to spend 1 day (including travel time) away from work.

Thus, the FAA determined that the proposed rule would involve between 48 and 128 additional, initial engineering/administration hours to apply for an ODA.

Similarly, Table 2 contains the FAA's estimate of the annual number of additional engineering/administration hours that would be needed to remain in compliance with the proposed rule. The paragraphs following Table 2 briefly explain these estimated hours. A more complete discussion is found in the *Initial Regulatory Evaluation.*

TABLE 2.—ANNUAL NUMBER OF ADMINISTRATIVE HOURS PER COMPANY BY TYPE OF CURRENT DESIGNATION AUTHORIZATION AND BY SIZE OF OPERATION

Type of annual activity	Large non-DDS participant	Small non-DDS participant	Large ODAR	Small ODAR
Refresher Training	40	20	20	10
Additional ODA Administrator Time	16	12	12	8
Periodic Self-Audits	36	16	16	16
FAA Review	32	12	8	8
ODA Administrator Travel	4	4	4	4
Total	128	64	60	56

Five of the DDS participants reported that they did not have a scheduled refresher training program as would be effectively required by the proposed FAA Order that ODA personnel receive biennial refresher training. Three reported that they did have a scheduled biennial program. On the basis that the DDS participants that did have a training program reported that each employee would need between 4 to 6 hours every 2 years, the FAA estimated that an annual equivalent would be 3 hours per year. Given the expected number of programs that would not incur additional training time, the FAA estimated that, on average, all ODA programs would need to add 2 hours of annual training to comply with the proposed requirement. This increase, when multiplied by the average number of ODA employees, produces the estimated number of additional engineer training hours in Table 2.

The annual additional ODA administrator time is based on the perception of the surveyed DDS participants that an ODA program may require an administrator to perform more documentation for personnel than is required for the previous designation authorizations. As a result, this extra paperwork would likely be directly related to the size and complexity of the ODA program, which is reflected in the estimated numbers of ODA administrator hours in Table 2.

The periodic self-audits were determined to vary by size and complexity of the work being performed under an ODA program. On that basis, the FAA estimated that the large non-DDS participant would need 12 engineering/administration hours and all other designation authorization programs would need 8 engineering/administration hours for a complete self-audit. In addition, the FAA estimated that a large non-DDS participant would conduct three of these self-audits annually while all other designation authorization

programs would conduct two annual self-audits.

Similarly, the FAA anticipates that it would spend more time reviewing larger and more complex ODA programs, which, in turn, would require a larger ODA program to spend more time cooperating with FAA reviews. On that basis, the FAA estimated that it would take 16 engineering/administration hours for a large non-DDS participant ODA program, 12 engineering/administration hours for a small non-DDS participant ODA program, and 8 engineering/administration hours for an ODAR program to cooperate with an FAA review. The FAA also anticipates that it would perform these reviews twice a year for the large non-DDS participant ODA programs and once a year for all other ODA programs.

Finally, the ODA administrator would need to attend the 1-day biennial ODA Standardization class. This analysis assumed that this every other year activity could be approximated by dividing the 8 hours biennial amount of time for travel and class attendance into annual 4-hour equivalents.

Thus, the FAA determined the proposed rule would involve between 56 and 128 more annual engineering/administration hours to apply for an ODA from the FAA.

In converting these hours to dollar values, the FAA assumed that, on average, the total hourly compensation (salary plus fringe benefits) for an engineer/administrator would be $110. This $110 value also incorporates the costs associated with any non-engineering/administration ancillary hours that would be needed for compliance. In addition, the FAA assumed the travel costs for an ODA administrator to attend the FAA ODA Standardization class would be $500 per trip.

On that basis, the FAA calculated the initial and the annual costs of compliance. The initial compliance cost per ODA program is contained in Table 3. The annual compliance cost per ODA program is calculated based on evenly dividing the biennial travel costs of $500 and lost engineering/administration labor cost of $880 by 2 to obtain an annual travel cost of $250 and an annual lost engineering/administration labor cost of $440. The annual compliance cost per ODA program is contained in Table 4.

TABLE 3.—PER COMPANY INITIAL COMPLIANCE COST BY TYPE OF DESIGNATION AUTHORIZATION AND BY SIZE OF OPERATION

Type of initial expenditure	Large non-DDS participant	Small non-DDS participant	Large ODAR	Small ODAR
Revise Procedures Manual	$4,400	$2,200	$1,760	$1,320
Revise Recordkeeping System	440	440	440	440
Initial Employee Instruction	4,400	2,200	2,200	1,100
FAA Application	2,860	1,760	1,540	1,540
Travel	1,380	1,380	1,380	1,380
Total	13,480	7,980	7,320	5,780
Present Value	12,490	7,400	6,780	5,350

TABLE–4.—PER COMPANY ANNUAL COMPLIANCE COST BY TYPE OF DESIGNATION AUTHORIZATION AND BY SIZE OF OPERATION

Type of annual expenditure	Large non-DDS participant	Small Non-DDS participant	Large ODAR	Small ODAR
Refresher Training	$4,400	$2,200	$2,200	$1,100
Additional ODA Administrator Time	1,760	1,320	1,320	880
Periodic Self-Audits	3,960	1,760	1,760	1,760
FAA Review	3,520	1,320	880	880
Travel	690	690	690	690
Total	14,330	7,290	6,850	5,310
Present Value	10,980	5,590	4,835	3,975

In estimating the total compliance costs, the FAA determined that the designation authorization programs taking part in the DDS program would incur minimal compliance costs because they have already incurred the initial costs and they would incur similar annual costs if they remained in the DDS program. Companies in the DDS program have already voluntarily made the initial expenditures and have voluntarily agreed to make the future annual expenditures to remain in the program.

On that basis, the FAA determined that large companies would operate 24 of the non-DDS participant programs and small companies would operate 14 of the non-DDS participant programs. The FAA also determined that large companies would operate 36 of the ODAR programs and small companies would operate 77 of the ODAR programs. As seen in Table 5, the FAA estimates that the undiscounted total initial compliance costs would be $1.144 million, which has a present value of $1.060 million. Further, as seen in Table 6, the FAA estimates that the undiscounted total annual compliance costs would be $1.102 million.

TABLE 5.—TOTAL INITIAL COST BY TYPE OF DESIGNATION AUTHORIZATION AND BY SIZE OF OPERATION

[Values rounded to nearest $100]

Type of initial expenditure	Large non-DDS participant	Small non-DDS participant	Large ODAR	Small ODAR	Total*
Revise Procedures Manual	$105,600	$30,800	$63,400	$101,600	$301,400
Revise Recordkeeping System	10,600	6,200	15,800	33,900	66,400
Initial Employee Instruction	105,600	30,800	79,200	84,700	300,300
FAA Application	68,600	24,600	55,400	118,600	208,400
Travel	33,100	19,300	49,700	102,300	208,40033,220
Total*	323,500	111,700	263,500	445,100	1,143,800
Present Value	299,800	103,500	244,200	412,400	1,059,900

***Note:** Totals may not add due to rounding.

TABLE 6.—TOTAL ANNUAL COST BY TYPE OF DESIGNATION AUTHORIZATION AND BY SIZE OF OPERATION

[Values rounded to nearest $100]

Type of annual expenditure	Large non-DDS participant	Small non-DDS participant	Large ODAR	Small ODAR	Total*
Refresher Training	$105,600	$30,800	$79,200	$84,700	$300,300
Additional ODA Administrator Time	21,100	12,300	31,700	67,800	132,900
Periodic Self-Audits	95,000	24,600	63,400	135,500	318,600
FAA Review	84,500	18,500	31,700	67,800	202,400
ODA Administrator Travel	16,600	9,700	24,800	53,100	104,200
Total*	343,900	102,100	246,600	408,900	1,101,500
Present Value	280,800	83,300	201,300	333,800	899,100

***Note:** Totals may not add due to rounding.

Further, the FAA did not estimate the benefits or costs for companies or organizations that do not now hold a designation authorization but that might apply for an ODA. Any estimate of the number of such companies and organizations would be speculative. Although they would incur costs, their decisions would be voluntary choices because they could continue to employ FAA-approved personnel following standard procedures to meet the FAA requirements. Thus, the decision to apply for an ODA would be made only if a company anticipated making a profit; that is, incurring negative net costs.

Finally, the FAA does not have enough information at this time to estimate the potential costs for companies and organizations to apply for ODAs that would be applicable in the general aviation sector. The FAA requests data and information on these companies and organizations.

Benefits

The proposed rule would enhance safety by: (1) Setting up an improved designation authorization system; and (2) allowing the FAA to better distribute its increasingly scarce certification and inspection resources.

The safety benefits that would arise from an improved designation authorization system would primarily be derived from: (1) An improved FAA-approved procedures manual that would result in higher quality certification processes; and (2) periodic ODA self-audits that would ensure certification activities were performed according to the procedures manual. Although the FAA believes that these are real safety benefits, the FAA is unable to calculate a quantitative value for them because the effect of these improvements in processes cannot be directly translated into a percentage increase in safety. That is, the FAA cannot state that ''the airplane will be X percent safer under an ODA system than under the current designation authorization system. As a result, the FAA can only provide this qualitative discussion of the expected benefits of establishing an ODA system.

The safety benefits that would arise from allowing the FAA to better distribute its increasingly scarce resources would derive from the FAA's applying these resources to evaluating the quality of the certificate and approval holders' performances rather than on witnessing tests and evaluating data. As the number of certifications and approvals increase over time, it is unlikely that FAA resources will increase commensurately. Thus, efficient use of these resources dictates that the FAA review and evaluate the overall quality of the certificate and approval holders' performances that directly relate to maintaining safety; that is, compliant designs and conforming products. This shift in FAA activity would be particularly significant when the FAA is tasked with evaluating designs involving new technology. By using ODAs to address findings of compliance for designs of familiar technology, the FAA would be able to devote more of its certification and inspection resources to addressing the safety concerns associated with new technology. Also, there are certain specialized general aviation areas where the FAA has not been able to obtain adequate resources to perform its certifications and authorizations at the desired quality level. At this time, the FAA cannot quantify the extent of the potential certification and inspection hours that it would be able to shift to other certification and inspection activities because the FAA cannot predict the number of companies that would apply for an ODA or the amount of these activities that would be delegated to the ODA.

By way of illustrating the potential savings in hours associated with a new aircraft certification, the FAA Aircraft Certification Services has estimated that it expended approximately 130,000 labor hours on a recent large transport category airplane certification. Using an estimate of $110 per hour total compensation rate for an FAA engineer/administrator (including salary, medical, vacation and other benefits as

well as an adjustment factor for supervisory and administrative personnel time), the FAA estimates that its Aircraft Certification Services spent about $14.3 million over the 4-year certification program. Note that these estimated hours do not include those hours expended by FAA Flight Standard Service in this same program. Had an organizational designee system approach been in effect, the FAA estimated that it could have shifted between 10 percent and 20 percent or about 13,000 to 26,000 of these hours from that certification program to programs that would have focused on the continued airworthiness of the commercial transport fleet. The FAA would still have expended about 104,000 to 117,000 hours in overseeing the operation of that manufacturer's ODA program for that program's activities.

Cost Savings

The proposed rule would provide potential cost savings to the aviation industry by reducing: (1) The number and length of some delays in work schedules due to the existing designation authorization system; and (2) the number of tests that must be performed.

Industry work schedules have been interrupted and work delayed because the FAA could not complete the requested certifications and approvals at the time needed due to its limited resources, other requests, and other agency priorities. Most of the DDS participants stated that the potential reduction of aircraft downtime was an important consideration in voluntarily undertaking the effort required for the DDS program. As an illustration of the amount of time savings that may be achieved, a member of the Delegation Authorization Working Group reported that his transport category airplane manufacturer implemented an internal designee program similar to that of an ODA and this was estimated to save an average of 50 hours per delivered airplane. This estimate was based on actual post-type certification scheduled activity over a specific period.

Under the current system, some certification tests are performed once for the company's engineers and then repeated for an FAA observer. Further, performing these tests often involve considerable equipment expense to the company, as well as the extra personnel time required. The proposed ODA program would remove some of these duplicate tests, although the Delegation Authorization Working Group members were unable to estimate the number of duplicate tests that would be eliminated.

Cost/Benefit Comparison

The Delegation Authorization Working Group and companies participating in the DDS program believe that the proposed rule would be cost beneficial. As noted earlier, companies that currently use FAA-approved personnel operating under standard practices to get FAA approvals could continue to operate under that system. Those companies would not be required to develop an ODA unless they believed it would be to their financial advantage. Companies that currently have designation authorizations would, however, be required to obtain an ODA if they intend to continue to have a designation authorization. If they do not intend to continue to have a designation authorization, they would be able to use FAA-approved personnel operating under standard practices. Members of the Delegation Authorization Working Group and seven of the eight surveyed DDS participants believe that the financial advantages from having an ODA would be sufficiently large that all, or nearly all, of the companies holding a current designation authorization would develop an ODA. They further reported that an ODA, as proposed in this rule, would be more cost-effective and would provide greater safety benefits than those provided by the current designation authorizations. Finally, the fact that many more designation authorization programs than the 21 ultimately selected by the FAA tried to enroll in the prototype program, provides strong evidence that those programs had expected a positive benefit cost result from participating in an ODA-like system.

Regarding general aviation, the FAA believes extending an ODA system to areas in general aviation that currently do not have designation authorization type programs would similarly benefit many in general aviation by reducing certification and authorization delays. On net, the FAA believes that the expansion of the ODA program in general aviation would have a positive net benefit.

In conclusion, the FAA believes that the benefits from the proposed rule would be greater than the costs of complying with the proposed rule.

Regulatory Flexibility Determination

The Regulatory Flexibility Act of 1980 (RFA) establishes as a principle of regulatory issuance that agencies shall endeavor, consistent with the objective of the rule and of applicable statutes, to fit regulatory and informational requirements to the scale of the business, organizations, and governmental jurisdictions subject to regulation. To achieve that principle, the Act requires agencies to solicit and consider flexible regulatory proposals and to explain the rationale for their actions.

Agencies must perform a review to determine whether a proposed or a final rule will have a significant economic impact on a substantial number of small entities. If the determination is that it will, the agency must prepare a Regulatory Flexibility Analysis as described in the RFA.

If an agency determines that a proposed or final rule is not expected to have a significant economic impact on a substantial number of small entities, section 605(b) of the RFA provides that the head of the agency may so certify and a Regulatory Flexibility Analysis is not required. The certification must include a statement providing the factual basis for this determination, and the reasoning should be clear.

This proposed rule would promote greater efficiency gains than it would create added costs. For example, small manufacturing companies would be able to set their production schedules without being dependent upon an outside individual's availibility at the required time to approve a product. Further, small airlines and repair stations would be able to minimize the amount of aircraft downtime, which results in lost revenue, to complete specified repairs. In addition, a small company that does not now have a designation authorization would voluntarily choose to apply for an ODA only if it was financially advantageous. Finally, the costs for an individual small business would ultimately be borne by the end user and the distribution of those costs between large and small businesses could not be determined.

Because of those arguments, the FAA Administrator certifies that the proposed rule would not have a significant economic impact on a substantial number of small entities.

International Trade Impact Analysis

The Trade Agreement Act of 1979 prohibits Federal agencies from engaging in any standards or related activities that would create unnecessary obstacles to the foreign commerce of the United States. Legitimate domestic objectives, such as safety, are not considered unnecessary obstacles. The statute also requires consideration of international standards and, where proper, that they be the basis for U.S. standards. The FAA has assessed the

potential effect of this proposed rule, according to that standard.

Thus, for both U.S. and European companies with plants and repair stations operating in the United States, the proposed rule would reduce the costs of certifying certain exams, tests, and inspections. The European aviation product certification system is so significantly different from the U.S. system that a harmonization effort is not possible. As a result, the FAA concludes that the proposed rule would have a minimal impact on international trade.

Unfunded Mandates Assessment

Title II of the Unfunded Mandates Reform Act of 1995 (the Act), enacted as Pub. L. 104–4 on March 22, 1995, requires each Federal agency, to the extent permitted by law, to prepare a written assessment of the effects of any Federal mandate in a proposed or final agency rule that may result in the expenditure by State, local, and tribal governments, in the aggregate, or by the private sector, of $100 million or more (adjusted annually for inflation) in any 1 year. Section 204(a) of the Act, 2 U.S.C. 1534(a), requires the Federal agency to develop an effective process to permit timely input by elected officers (or their designees) of State, local, and tribal governments on a proposed ''significant intergovernmental mandate.'' A ''significant intergovernmental mandate'' under the Act is any provision in a Federal agency regulation that will impose an enforceable duty upon State, local, and tribal governments, in the aggregate, of $100 million (adjusted annually for inflation) in any one year. The FAA determined that this proposed rule would not contain a Federal intergovernmental or private sector mandate that would exceed $100 million in any year, therefore, the requirements of the Act do not apply.

Executive Order 13132, Federalism

The FAA has analyzed this proposed rule under the principles and criteria of Executive Order 13132, Federalism. The FAA has determined that this action would not have a substantial direct effect on the States, on the relationship between the national government and the States, or on the distribution of power and responsibilities among the various levels of government. Also, the FAA has determined that this notice of proposed rulemaking would not have federalism implications.

List of Subjects

14 CFR Part 21

Aircraft, Aviation safety, Exports, Imports, Reporting and recordkeeping requirements.

14 CFR Part 121

Air carriers, Aircraft, Airmen, Aviation safety, Reporting and recordkeeping requirements, Safety, Transportation.

14 CFR Part 135

Air taxis, Aircraft, Airmen, Aviation safety, Reporting and recordkeeping requirements.

14 CFR Part 145

Aircraft, Aviation safety, Reporting and recordkeeping requirements.

14 CFR Part 183

Aircraft, Airmen, Authority delegations (Government agencies), Reporting and recordkeeping requirements.

The Proposed Amendment

The Federal Aviation Administration proposes to amend parts 21, 121, 135, 145, and 183 of the Federal Aviation Regulations as follows:

PART 21—CERTIFICATION PROCEDURES FOR PRODUCTS AND PARTS

1. The authority citation for part 21 continues to read as follows:

Authority: 42 U.S.C. 7572; 49 U.S.C. 106(g), 40105, 40113, 44701–44702, 44707, 44709, 44711, 44713, 44715, 45303.

2. Section 21.230 is added to read as follows:

§ 21.230 Compliance dates.

(a) No person may apply for a Delegation Option Authorization under this subpart after [insert date of publication in the **Federal Register** of the final rule]. A person may apply for an Organization Designation Authorization under subpart D of part 183 of this chapter on or after [insert date of publication in the **Federal Register** of the final rule].

(b) No person may perform the functions of a Delegation Option Authorization issued under this subpart after [insert date 3 years after date of publication in the **Federal Register** of the final rule].

3. Section 21.430 is added to read as follows:

§ 21.430 Compliance dates.

(a) No person may apply for a Designated Alteration Station authorization under this subpart after [insert date of publication in the **Federal Register** of the final rule]. A person may apply for an Organization Designation Authorization under subpart D of part 183 of this chapter on or after [insert date of publication in the **Federal Register** of the final rule].

(b) No person may perform the functions of a designated alteration station authorization issued under this subpart after [insert date 3 years after date of publication in the **Federal Register** of the final rule].

PART 121—OPERATING REQUIREMENTS: DOMESTIC, FLAG, AND SUPPLEMENTAL OPERATIONS

4. The authority citation for part 121 continues to read as follows:

Authority: 49 U.S.C. 106(g), 40113, 40119, 44101, 44701–44702, 44705, 44709–44711, 44713, 44716–44717, 44722, 44901, 44903–44904, 44912, 46105.

PART 135—OPERATING REQUIREMENTS: COMMUTER AND ON DEMAND OPERATIONS AND RULES GOVERNING PERSONS ON BOARD SUCH AIRCRAFT

5. The authority citation for part 135 continues to read as follows:

Authority: 49 U.S.C. 106(g), 40113, 44701–44702, 44705, 44709, 44711–44713, 44715–44717, 44722.

PART 145—REPAIR STATIONS

6. The authority citation for part 145 continues to read as follows:

Authority: 49 U.S.C. 106(g), 40113, 44701–44702, 44707, 44717.

7. In parts 121, 135, and 145, Special Federal Aviation Regulation No. 36, the text of which is found at the beginning of part 121, is amended by—

(a) Revising the introductory text of section 4 as set forth below; and

(b) Revising the unnumbered paragraph in section 13 to read as set forth below.

Special Federal Aviation Regulation No. 36

* * * * *

4. *Application.* The applicant for an authorization under this Special Federal Aviation Regulation must submit an application before [insert date of publication of final rule], in writing, and signed by an officer of the applicant, to the certificate holding district office. On or after [insert date of publication in the **Federal Register** of the final rule] a person may apply for an Organization Designation Authorization under subpart D of part 183 of this chapter. The application must contain—

* * * * *

This Special Federal Aviation Regulation terminates [insert date 3 years after date of publication in the **Federal Register** of the final rule], and no person may perform a function authorized under this SFAR after that date.

PART 183—REPRESENTATIVES OF THE ADMINISTRATOR

8. The authority citation for part 183 continues to read as follows:

Authority: 31 U.S.C. 9701; 49 U.S.C. 106(g), 40113, 44702, 44721, 45303.

9. Section 183.1 is revised to read as follows:

§ 183.1 Scope.

This part describes the requirements for designating private persons to act as representatives of the Administrator in examining, inspecting, and testing persons and aircraft for the purpose of issuing airman, operating, and aircraft certificates. In addition, this part states the privileges of those representatives and prescribes rules for the exercising of those privileges, as follows:

(a) Private individuals may be designated as representatives of the Administrator under subparts B and C of this part.

(b) Private organizations may be designated as representatives of the Administrator by obtaining Organization Designation Authorizations under subpart D of this part.

10. Section 183.15 is amended by removing paragraph (c), redesignating paragraph (d) as paragraph (c), and revising paragraphs (a) and (b) to read as follows:

§ 183.15 Duration of certificates.

(a) Unless sooner terminated under paragraph (c) of this section, a designation as an Aviation Medical Examiner is effective for 1 year after the date it is issued, and may be renewed for additional periods of 1 year at the Federal Air Surgeon's discretion. A renewal is effected by a letter and issuance of a new identification card specifying the renewal period.

(b) Unless sooner terminated under paragraph (c) of this section, a designation as Flight Standards or Aircraft Certification Service Designated Representative as described in §§ 183.27, 183.29, 183.31, or 183.33 is effective until the expiration date shown on the Certificate of Authority.

* * * * *

11. A new subpart D is added to part 183 to read as follows:

Subpart D—Organization Designation Authorization

Sec.

183.41 Applicability and definitions.
183.43 Application.
183.45 Issuance of Organization Designation Authorizations.
183.47 Eligibility.
183.49 Authorized functions.
183.51 Personnel.
183.53 Procedures manual.
183.55 Limitations.
183.57 Responsibilities of an ODA Holder.
183.59 Continued eligibility.
183.61 Inspection.
183.63 Records and reports.
183.65 Data review and service experience.
183.67 Transferability and duration.

§ 183.41 Applicability and definitions.

(a) This subpart prescribes—

(1) The procedural requirements for obtaining an Organization Designation Authorization (ODA) to perform functions authorized in the areas of engineering, manufacturing, operations, airworthiness, and maintenance; and

(2) The rules governing the holders and units of such authorizations.

(b) For the purposes of this subpart—

(1) *ODA Unit* means an identifiable unit of two or more individuals within an organization that performs the functions on behalf of the Administrator, according to this subpart;

(2) *ODA Holder* means the parent organization that obtained an ODA Letter of Designation; and

(3) *ODA* means the authorization to perform functions on behalf of the FAA.

§ 183.43 Application.

(a) An application for an ODA must be submitted in a form and manner prescribed by the Administrator.

(b) The application must include the following:

(1) A description of the authorized functions requested and evidence of eligibility for the functions in accordance with § 183.47.

(2) A description of the applicant's proposed organizational structure, including the ODA Unit as it relates to the relevant overall structure.

(3) A proposed procedures manual as described in § 183.53.

§ 183.45 Issuance of Organization Designation Authorizations.

The Administrator may issue an ODA Letter of Designation if the Administrator finds that the applicant meets the applicable requirements of this subpart and if there is an FAA need.

(a) The ODA Letter of Designation identifies the ODA Holder, type of ODA, the ODA number, expiration date, location of facilities, date issued, authorizing office, and authorized functions with any limitations; and as applicable, the categories of products, components, parts, appliances, ratings, or specific certificates or authorizations.

(b) An ODA Holder must apply to and obtain approval from the Administrator for any changes to the authorized functions or limitations.

§ 183.47 Eligibility.

(a) To be eligible for an ODA, the applicant must—

(1) Have adequate facilities located in the United States, resources, personnel, and qualifications appropriate to the functions sought; and

(2) Have sufficient experience with FAA requirements, policy, processes, and procedures appropriate to the functions sought.

(b) An applicant for an ODA must meet one or more of the following requirements as appropriate to the functions sought:

(1) Have been issued and hold a current type certificate, supplemental type certificate (STC), or parts manufacturer approval (PMA) under the standard procedures of part 21 of this chapter for a product approved under the same or predecessor regulation part for which an ODA is sought.

(2) Have been issued and hold a current repair station certificate under part 145 of this chapter.

(3) Have been issued and hold a current air carrier or commercial operating certificate under part 119 of this chapter.

(4) Hold or have held designation authority for the issuance of airman certificates or authorizations.

(5) Hold or have held designation authority for conducting pilot and flight engineer proficiency checks.

(6) Have sufficient experience, as determined by the Administrator, in design approval; airworthiness inspection; conformity inspection; certification and authorizations of pilots and crew members; external load operations; agricultural operations; pilot schools; training centers; or parachute jumping operations, as appropriate for performing the ODA authorizations sought.

(c) An applicant seeking functions in the area of production must also meet the following requirements:

(1) For the product, components, parts, or appliances for which the applicant seeks functions, the applicant must have one of the following design approvals:

(i) A current type certificate.

(ii) A current supplemental type certificate.

(iii) Design data developed by the PMA applicant under standard

procedures using tests and computations. This means the Administrator approved the data.

(2) For the product, components, parts, or appliances for which the applicant is seeking designation authorization, the applicant must have a current Production Certificate or PMA issued under the standard procedures of part 21 of this chapter.

(d) For the purposes of this section, standard procedures do not include transfers and licenses issued under part 21 of this chapter and approvals based on identicality under § 21.303(c)(4) of this chapter.

§ 183.49 Authorized functions.

(a) The Administrator may authorize, consistent with the ODA Holder's qualifications and experience, functions that may be performed by an ODA Unit.

(b) The ODA Unit may perform, within the limits prescribed by and under the general supervision of the Administrator, functions authorized by the Administrator.

(c) ODA functions that may be authorized by the Administrator, based on findings of compliance with the applicable regulations of this chapter, may include one or more of the following:

(1) Approving technical data and changes to approved data.

(2) Determining means of compliance with airworthiness standards previously approved by the Administrator.

(3) Finding compliance with airworthiness standards.

(4) Issuing STCs.

(5) Issuing PMA supplements for test and computations or licensing agreements.

(6) Approving or accepting manuals and changes/supplements to manuals.

(7) Issuing certain Airworthiness Certificates and related approvals.

(8) Establishing conformity requirements and determining conformity.

(9) Finding compliance to part 21, subpart G necessary to issue a Production Limitation Record.

(10) Conducting knowledge tests required for the certification of airmen.

(11) Finding compliance with operating requirements for certification and authorization of pilots and crewmembers under parts 61 and 63, and authorizations under part 91.

(12) Issuing authorizations for determining operational competency or proficiency.

(13) Issuing authorizations for parachute jumping operations under part 105.

(14) Finding compliance with operating requirements for certification and authorization of air agencies under part 141, training centers under part 142, external load operators under part 133, and agricultural operators under part 137.

(15) Performing any other functions deemed appropriate by the Administrator.

§ 183.51 Personnel.

Each ODA Holder must have within the ODA Unit—

(a) A qualified ODA administrator(s); and

(b) A staff consisting of engineering, flight test, inspection, and maintenance personnel appropriate for the performance of authorized functions, who have the experience and expertise in aircraft certification to find compliance, determine conformity and airworthiness, issue certificates; or

(c) A staff consisting of operations personnel who have the experience and expertise to find compliance for the issuance of pilot, crew member, or operating certificates, authorizations, or endorsements as appropriate for the performance of functions requested.

§ 183.53 Procedures manual.

An ODA may be issued under this subpart when the applicant submits to the FAA and obtains approval of a procedures manual. The current approved procedures manual must be made available to each individual of the ODA Unit. Changes to the procedures manual may not be implemented until approved by the FAA. The procedures manual must contain—

(a) The authorized certification and approval functions and the appropriate categories of products, certificates, authorizations, or ratings for the designation requested, and any limitations;

(b) The procedures for performing the authorized functions;

(c) Procedures that explain the ODA organizational structure and responsibilities;

(d) A description of the facilities used in performing the authorized functions;

(e) A process and procedure for self-audit by the ODA Holder of the ODA Unit;

(f) Procedures that document the self-audit results and demonstrate that all necessary corrective actions were taken;

(g) The requirements, methods, and procedures for communicating and consulting with the appropriate FAA offices;

(h) The training required for personnel performing functions authorized under the ODA Unit;

(i) The content of records and manner of maintaining records;

(j) Position descriptions and required qualifications;

(k) The procedures for appointing ODA Unit staff members and the means for documenting the names of such individuals;

(l) The method of documenting and determining the approval requirements for changes in facilities or organizational structure;

(m) The procedures for obtaining and maintaining related regulatory guidance material;

(n) Procedures for performing continued airworthiness functions, including coordinating and assisting the FAA in the investigation and resolution of service difficulties; and

(o) The process and procedures for revising the procedures manual and notifying the FAA of the changes.

§ 183.55 Limitations.

(a) An ODA Unit may perform only the certification, authorization, and approval functions set forth in the procedures manual.

(b) An ODA Unit may not perform an authorized function if there has been a change within the ODA Unit or ODA Holder that may affect the Unit's qualifications or ability to perform that function (including but not limited to changes in location of facilities, resources, personnel or the organizational structure) until the Administrator is notified of the change and the change has been appropriately documented and approved as required in the procedures manual.

(c) An ODA Unit may not issue a certificate, authorization, or other approval for which a finding of the Administrator is required until the Administrator makes that finding.

(d) An ODA Unit is subject to any other limitations as specified by the Administrator.

§ 183.57 Responsibilities of an ODA Holder.

The ODA Holder must—

(a) Comply with the procedures in its approved procedures manual;

(b) Give its personnel performing as ODA authorized representatives within the ODA Unit, sufficient authority and independence to enable them to administer and perform the authorized functions according to FAA regulations and policies;

(c) Ensure that no interference or conflicting restraints are placed on the ODA Unit or on the personnel performing the designated functions while complying with this part and the approved procedures manual; and

(d) Cooperate with the FAA, as necessary, in the performance of the

FAA's audit, oversight, and surveillance of an ODA Unit.

§ 183.59 Continued eligibility.

An ODA Holder must continue to meet the requirements of this subpart. The ODA Holder must notify the FAA Administrator within 48 hours of a change that could affect the ODA Holder's ability to meet the requirements of this subpart.

§ 183.61 Inspection.

Each applicant and ODA Holder must allow the FAA to inspect facilities, products, components, parts, appliances, procedures, operations, and records associated with the authorized designation to determine compliance with this part.

§ 183.63 Records and reports.

(a) The ODA Holder must—

(1) Upon request of the FAA, make available, at any time, for examination, the records and data specified in this section; and

(2) Identify and send the records and data specified in this section to the Administrator as soon as the ODA is surrendered, suspended, revoked, or otherwise terminated.

(b) Each ODA Holder must maintain or ensure that the following records are maintained for the duration of the authorization:

(1) The records required to approve technical data. These records must include any other data as prescribed by 14 CFR part 21, the original type inspection report, amendments to that report, required certification reports, and associated correspondence.

(2) The data required to be submitted with the application for a production certificate, PMA and amendments thereof.

(3) The data required to be submitted to support the issuance of supplemental type certificates, airworthiness certificates, export approvals, production limitation record, or any other approval authorized under this subpart.

(4) A list of the products, components, parts, or appliances for which an ODA Unit performs an authorized function. For each product, the list must include manufacturer and model, manufacturer's serial number, as applicable, and any FAA identification number that has been issued under this subpart or under a type certificate, amended type certificate, supplemental type certificate, or a major repair or alteration as applicable.

(5) The names (including signatures), responsibilities, and qualifications of individuals, who are performing or have performed functions under the ODA.

(6) Applications and applicable data for issuance of certificates and/or approvals.

(7) A copy of the approved or accepted manuals, including all changes.

(8) Training records showing ODA Unit personnel and ODA administrator training.

(9) Self-audit and corrective action records.

(10) All other records required by the approved ODA procedures manual.

(c) Each ODA Holder must maintain for 2 years—

(1) A complete inspection record, by serial number, for each product manufactured and data covering the processes and tests to which the product's materials and parts are subjected; and

(2) A record of service difficulties reported to the ODA Unit.

(d) Each ODA Holder and each ODA Unit under this subpart must make such reports as prescribed by the Administrator.

§ 183.65 Data review and service experience.

(a) If the Administrator or ODA Unit finds that a potentially unsafe condition exists in a product or the product does not meet the applicable airworthiness requirements for which approval or issuance of a certificate or authorization was authorized under this subpart, the ODA Unit, in coordination with the FAA, must investigate the matter. The investigation must take priority over all other delegated activities. The ODA Unit must report to the FAA the results of the investigation and action, if any, taken or proposed by the ODA Holder, as required by 14 CFR 21.3 and 21.99.

(b) If the Administrator determines that further action is necessary for the safe operation of the product for a condition specified in paragraph (a) of this section, the ODA Unit must submit to the FAA the information in its possession necessary to support the FAA in implementing corrective action.

(c) An ODA Unit performing operations certification or authorization under parts 61, 63, 91, 105, 133, 137, 141, or 142 of this chapter, that finds an unsafe or unsatisfactory condition must notify the Administrator and halt the certification or authorization process until such time as the condition or operation has been determined by the Administrator to be corrected and in compliance with the requirements.

§ 183.67 Transferability and duration.

(a) An Organization Designation Authorization is effective until the expiration date shown on the Letter of Designation and is not transferable.

(b) An ODA terminates, or may be suspended, upon any of the following circumstances:

(1) The written request of the ODA Holder.

(2) A determination by the Administrator that the ODA Unit has not properly performed its duty under the designation.

(3) A determination by the Administrator that the assistance of the ODA Unit is no longer needed.

(4) Any other reason the Administrator considers appropriate.

Issued in Washington, DC, on January 13, 2004.

John J. Hickey,

Director, Aircraft Certification Service.

[FR Doc. 04–1133 Filed 1–20–04; 8:45 am]

BILLING CODE 4910–13–P

Federal Register

Wednesday,
January 21, 2004

Part III

Department of Defense
General Services Administration
National Aeronautics and Space Administration

48 CFR Parts 2 and 52

Federal Acquisition Regulation; Definitions Clause; Proposed Rule

DEPARTMENT OF DEFENSE

GENERAL SERVICES ADMINISTRATION

NATIONAL AERONAUTICS AND SPACE ADMINISTRATION

48 CFR Parts 2 and 52

[FAR Case 2002–013]

RIN: 9000–AJ83

Federal Acquisition Regulation; Definitions Clause

AGENCIES: Department of Defense (DoD), General Services Administration (GSA), and National Aeronautics and Space Administration (NASA).

ACTION: Proposed rule.

SUMMARY: The Civilian Agency Acquisition Council and the Defense Acquisition Regulations Council (Councils) are proposing to amend the Federal Acquisition Regulation (FAR) to clarify what FAR definitions apply to FAR solicitation provisions and contract clauses.

DATES: Interested parties should submit comments in writing on or before March 22, 2004 to be considered in the formulation of a final rule.

ADDRESSES: Submit written comments to—General Services Administration, FAR Secretariat (MVA), 1800 F Street, NW., Room 4035, ATTN: Laurie Duarte, Washington, DC 20405. Submit electronic comments via the Internet to—*farcase.2002–013@gsa.gov.* Please submit comments only and cite FAR case 2002–013 in all correspondence related to this case.

FOR FURTHER INFORMATION CONTACT: The FAR Secretariat at (202) 501–4755 for information pertaining to status or publication schedules. For clarification of content, contact Ms. Jeritta Parnell, Procurement Analyst, at (202) 501–4082. Please cite FAR case 2002–013.

SUPPLEMENTARY INFORMATION:

A. Background

This proposed FAR rule amends the FAR to address the issue that FAR clause 52.202–1, Definitions, is an incomplete list of definitions applicable to the provisions and clauses. This case clarifies what FAR definitions apply to FAR solicitation provisions and contract clauses.

This is not a significant regulatory action and, therefore, was not subject to review under Section 6(b) of Executive Order 12866, Regulatory Planning and Review, dated September 30, 1993. This rule is not a major rule under 5 U.S.C. 804.

B. Regulatory Flexibility Act

The Councils do not expect this proposed rule to have a significant economic impact on a substantial number of small entities within the meaning of the Regulatory Flexibility Act, 5 U.S.C. 601, *et seq.*, because the principle of how definitions apply is already expressed in FAR Part 2. But, it is not as clearly expressed in the Part 52 clauses. This case repeats the principle in a clause so contractors have a clearer idea of which words have official FAR definitions. An Initial Regulatory Flexibility Analysis has, therefore, not been performed. We invite comments from small businesses and other interested parties. The Councils will consider comments from small entities concerning the affected FAR Parts 2 and 52 in accordance with 5 U.S.C. 610. Interested parties must submit such comments separately and should cite 5 U.S.C. 601, *et seq.* (FAR case 2002–013), in correspondence.

C. Paperwork Reduction Act

The Paperwork Reduction Act does not apply because the proposed changes to the FAR do not impose information collection requirements that require the approval of the Office of Management and Budget under 44 U.S.C. 3501, *et seq.*

List of Subjects in 48 CFR Parts 2 and 52

Government procurement.

Dated: January 13, 2004.

Laura Auletta,

Director, Acquisition Policy Division.

Therefore, DoD, GSA, and NASA propose amending 48 CFR parts 2 and 52 as set forth below:

1. The authority citation for 48 CFR parts 2 and 52 continues to read as follows:

Authority: 40 U.S.C. 486(c); 10 U.S.C. chapter 137; and 42 U.S.C. 2473(c).

PART 2—DEFINITIONS OF WORDS AND TERMS

2. Revise section 2.201 to read as follows:

2.201 Contract clause.

Insert the clause at 52.202–1, Definitions, in solicitations and contracts that exceed the simplified acquisition threshold.

PART 52—SOLICITATION PROVISIONS AND CONTRACT CLAUSES

3. Revise section 52.202–1 to read as follows:

52.202–1 Definitions.

As prescribed in section 2.201, insert the following clause:

Definitions (Date)

(a) When a solicitation provision or contract clause uses a word or term that is defined in the Federal Acquisition Regulation (FAR), the word or term has the same meaning as the definition in FAR 2.101 in effect at the time the solicitation was issued, unless—

(1) The solicitation, or amended solicitation, provides a different definition;

(2) The contracting parties agree to a different definition;

(3) The part, subpart, or section of the FAR where the provision or clause is prescribed provides a different meaning; or

(4) The word or term is defined in Subpart 31 for use in the cost principles and procedures.

(b) The FAR Index is a guide to words and terms the FAR defines and shows where each definition is located. The FAR Index is available via the Internet at *http://www.arnet.gov/* at the end of the Federal Acquisition Regulation, after the FAR Appendix.

(End of clause)

4. In section 52.244–6(a), revise the definition ''Commercial item'' to read as follows:

52.244–6 Subcontracts for Commercial Items.

* * * * *

(a) * * *

Commercial item has the meaning contained in Federal Acquisition Regulation 2.101, Definitions.

* * * * *

[FR Doc. 04–1152 Filed 1–20–04; 8:45 am]

BILLING CODE 6820–EP–P

Federal Register

Wednesday,
January 21, 2004

Part IV

The President

Notice of January 16, 2004—Continuation of the National Emergency With Respect to Terrorists Who Threaten To Disrupt the Middle East Peace Process

Federal Register
Vol. 69, No. 13
Wednesday, January 21, 2004

Presidential Documents

Title 3—

The President

Notice of January 16, 2004

Continuation of the National Emergency With Respect to Terrorists Who Threaten To Disrupt the Middle East Peace Process

On January 23, 1995, by Executive Order 12947, the President declared a national emergency pursuant to the International Emergency Economic Powers Act (50 U.S.C. 1701–1706) to deal with the unusual and extraordinary threat to the national security, foreign policy, and economy of the United States constituted by grave acts of violence committed by foreign terrorists who threaten to disrupt the Middle East peace process. On August 20, 1998, by Executive Order 13099, the President modified the Annex to Executive Order 12947 to identify four additional persons, including Usama bin Laden, who threaten to disrupt the Middle East peace process.

Because these terrorist activities continue to threaten the Middle East peace process and continue to pose an unusual and extraordinary threat to the national security, foreign policy, and economy of the United States, the national emergency declared on January 23, 1995, as expanded on August 20, 1998, and the measures adopted on those dates to deal with that emergency must continue in effect beyond January 23, 2004. Therefore, in accordance with section 202(d) of the National Emergencies Act (50 U.S.C. 1622(d)), I am continuing for 1 year the national emergency with respect to foreign terrorists who threaten to disrupt the Middle East peace process.

This notice shall be published in the **Federal Register** and transmitted to the Congress.

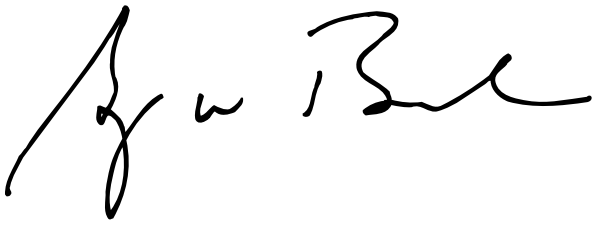

THE WHITE HOUSE,
January 16, 2004.

[FR Doc. 04–1407
Filed 1–20–04; 9:21 am]
Billing code 3195–01–P

Federal Register

Wednesday,
January 21, 2004

Part V

The President

Proclamation 7753—Religious Freedom Day, 2004

Federal Register
Vol. 69, No. 13
Wednesday, January 21, 2004

Presidential Documents

Title 3—

The President

Proclamation 7753 of January 16, 2004

Religious Freedom Day, 2004

By the President of the United States of America

A Proclamation

America is a land of many faiths, and the right to religious freedom is a foundation of our Nation. On Religious Freedom Day, Americans acknowledge the centrality of their faith and reaffirm that the great strength of our country is the heart and soul of our citizens.

Religious Freedom Day celebrates the passage of the Virginia Statute for Religious Freedom on January 16, 1786. Thomas Jefferson, drafter of the legislation, considered it one of his three greatest accomplishments, along with writing the Declaration of Independence and founding the University of Virginia. Recognizing the importance of faith to our people, our Founding Fathers guaranteed religious freedom in the Constitution.

Protecting our religious freedom requires the vigilance of the American people and of government at all levels. Within my Administration, the Department of Justice is acting to protect religious freedom, including prosecuting those who attack people or places of worship because of religious affiliation. The Department of Education has issued new guidelines that allow students to engage in constitutionally protected religious activity in public schools. These guidelines protect, for example, students' rights to say a prayer before meals in the cafeteria, to gather with other students before school to pray, and to engage in other expressions of personal faith.

Through my Faith-Based and Community Initiative, my Administration continues to encourage the essential work of faith-based and community organizations. Governments can and should support effective social services, including those provided by religious people and organizations. When government gives that support, it is important that faith-based institutions not be forced to change their religious character. In December 2002, I signed an Executive Order to end discrimination against faith-based organizations in the Federal grants process. In September 2003, in implementing this order, my Administration eliminated many of the barriers that have kept faith-based charities from partnering with the Federal Government to help Americans in need. Six Federal agencies have proposed or finalized new regulations to ensure that no organization or beneficiary will be discriminated against in a Federally funded social service program on the basis of religion.

NOW, THEREFORE, I, GEORGE W. BUSH, President of the United States of America, by virtue of the authority vested in me by the Constitution and laws of the United States, do hereby proclaim January 16, 2004, as Religious Freedom Day. I urge all Americans to reflect on the blessings of our religious freedom and to observe this day through appropriate events and activities in homes, schools, and places of worship.

IN WITNESS WHEREOF, I have hereunto set my hand this sixteenth day of January, in the year of our Lord two thousand four, and of the Independence of the United States of America the two hundred and twenty-eighth.

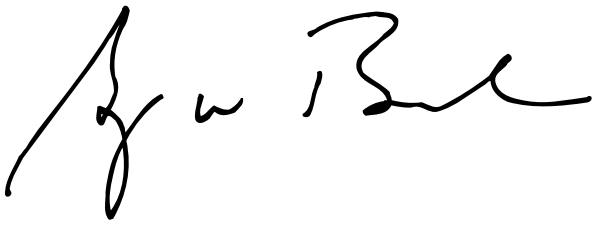

[FR Doc. 04–1426
Filed 1–20–04; 10:57 am]
Billing code 3195–01–P

Reader Aids

Federal Register

Vol. 69, No. 13

Wednesday, January 21, 2004

CUSTOMER SERVICE AND INFORMATION

Federal Register/Code of Federal Regulations	
General Information, indexes and other finding aids	**202–741–6000**
Laws	**741–6000**
Presidential Documents	
Executive orders and proclamations	**741–6000**
The United States Government Manual	**741–6000**
Other Services	
Electronic and on-line services (voice)	**741–6020**
Privacy Act Compilation	**741–6064**
Public Laws Update Service (numbers, dates, etc.)	**741–6043**
TTY for the deaf-and-hard-of-hearing	**741–6086**

ELECTRONIC RESEARCH

World Wide Web

Full text of the daily Federal Register, CFR and other publications is located at: **http://www.access.gpo.gov/nara**

Federal Register information and research tools, including Public Inspection List, indexes, and links to GPO Access are located at: **http://www.archives.gov/federal__register/**

E-mail

FEDREGTOC-L (Federal Register Table of Contents LISTSERV) is an open e-mail service that provides subscribers with a digital form of the Federal Register Table of Contents. The digital form of the Federal Register Table of Contents includes HTML and PDF links to the full text of each document.

To join or leave, go to **http://listserv.access.gpo.gov** and select *Online mailing list archives, FEDREGTOC-L, Join or leave the list (orchange settings);* then follow the instructions.

PENS (Public Law Electronic Notification Service) is an e-mail service that notifies subscribers of recently enacted laws.

To subscribe, go to **http://listserv.gsa.gov/archives/publaws-l.html** and select *Join or leave the list* (or change settings); then follow the instructions.

FEDREGTOC-L and **PENS** are mailing lists only. We cannot respond to specific inquiries.

Reference questions. Send questions and comments about the Federal Register system to: **info@fedreg.nara.gov**

The Federal Register staff cannot interpret specific documents or regulations.

FEDERAL REGISTER PAGES AND DATE, JANUARY

1–242 2
243–484 5
485–848 6
849–1268 7
1269–1502 8
1503–1646 9
1647–1892 12
1893–2052 13
2053–2288 14
2289–2478 15
2479–2652 16
2654–2824 20
2825–2996 21

CFR PARTS AFFECTED DURING JANUARY

At the end of each month, the Office of the Federal Register publishes separately a List of CFR Sections Affected (LSA), which lists parts and sections affected by documents published since the revision date of each title.

3 CFR

Proclamations:
7748 227
7751 2819
7752 2821
7753 2995

Executive Orders:
12543 (See Notice of January 5, 2004 847
12947 (See Notice of January 16, 2004) 2991
13099 (See Notice of January 16, 2004) 2991
13194 (See EO 3324) 2823
13213 (See EO 3324) 2823
13322 231
13323 241
13324 2823

Administrative Orders:
Notices:
Notice of January 5, 2004 847
Notice of January 16, 2004 2991
Memorandums:
Memorandum of May 6, 2003 (Amended by Memorandum of December 5, 2003) 1645
Presidential Determinations:
No. 2004–16 2053
No. 2004–17 2055
No. 2004–18 2057
No. 2004–19 2479
No. 2004–20 2477

5 CFR

317 2048
352 2048
531 2048
534 2048

Proposed Rules:
370 2308
2634 1954

7 CFR

55 1647
301 .....243, 245, 247, 2653
319 .....2289, 2481
718 249
868 1893
905 485
944 485
959 2491
981 1269
982 2493
1124 1654
1480 249

Proposed Rules:
981 551
1135 1957
1469 .....194, 2083, 2852
1980 2521
4279 2521

8 CFR

214 468
215 468
235 468

9 CFR

300 250
301 .....250, 1874
306 250
309 1862
310 .....1862, 1885
311 1862
313 1885
318 .....250, 1862, 1874
319 1862
320 .....250, 1874
381 250
592 1647

Proposed Rules:
381 1547

10 CFR

1 2182
2 2182
50 2182
51 2182
52 2182
54 2182
60 2182
63 2182
70 2182
72 .....849, 2182, 2497
73 2182
75 2182
76 2182
110 2182

Proposed Rules:
50 879
72 2528

11 CFR

Proposed Rules:
4 2083
5 2083
11 2083

12 CFR

7 .....1895, 1904
34 1904
229 1655
330 2825
1102 2500

Proposed Rules:
Ch. I 2852
Ch. II 2852
Ch. III 2852

Ch. V....2852
5....1, 892
229....1470

14 CFR

1....1620
23....488
25....490
39....492, 494, 859, 861, 864, 867, 869, 871, 1503, 1504, 1505, 1507, 1509, 1511, 1513, 1515, 1516, 1519, 1521, 1657, 1659, 2059, 2062, 2655, 2656, 2657, 2659, 2661
71....495, 497, 1661, 1662, 1663, 1664, 1666, 1667, 1668, 1669, 1670, 1671, 1672, 1783, 2295, 2296, 2297, 2816
91....1620
95....2830
97....1674
121....1620, 1840
125....1620
135....1620
255....976
1260....2831

Proposed Rules:

1....551
21....282, 551, 2970
25....551
33....551
39....282, 284, 287, 289, 291, 293, 895, 897, 900, 1274, 1275, 1547, 1549, 1551, 2855
61....2529
71....2084, 2085, 2086, 2088, 2089, 2090, 2091, 2311, 2312
73....552
91....2529
119....2529
121....282, 551, 2529, 2970
135....551, 2529, 2970
136....2529
145....2970
183....2970

15 CFR

711....2501

Proposed Rules:

740....1685
742....1685
748....1685
754....1685
772....1685

17 CFR

Proposed Rules:

240....2531

18 CFR

385....2503

19 CFR

Proposed Rules:

101....2092
162....2093

20 CFR

404....497
422....497

Proposed Rules:

416....554

21 CFR

1....1675
201....255, 1320
510....1522
520....499
522....500
524....500
558....1522
610....255, 1320
1300....2062
1309....2062
1310....2062

Proposed Rules:

184....2313

22 CFR

121....873

24 CFR

203....4

Proposed Rules:

1000....2094

25 CFR

514....2504

Proposed Rules:

Ch. 1....2317

26 CFR

1....5, 12, 22, 436, 502, 1918
20....12
25....12
26....12
301....506
602....22, 436, 1918

Proposed Rules:

1....42, 43, 47, 2862
301....47

28 CFR

31....2832
33....2832
38....2298, 2832
90....2832
91....2832
93....2832
302....1524

29 CFR

102....1675
4022....2299
4044....2299

Proposed Rules:

1926....1277

30 CFR

934....2663

Proposed Rules:

780....1036
816....1036
817....1036
935....2689

31 CFR

363....2506

32 CFR

320....2066
806b....507, 954
1665....1524

33 CFR

17....267
117....1525, 1918, 2508
148....724
149....724
150....724
165....268, 1527, 1618, 2066, 2666, 2841
334....271

Proposed Rules:

110....2095
117....1554, 1958, 2552
147....2691, 2694
151....1078
165....1556, 2318, 2320, 2554
174....2098

36 CFR

215....1529
218....1529
223....29

Proposed Rules:

1254....295
1256....295

38 CFR

17....1060

40 CFR

9....2398
52....34, 1271, 1537, 1677, 1682, 1919, 1921, 2300, 2509, 2671, 2967
60....1786
62....2302, 2304
63....130, 394
70....2511
86....2398
90....1824, 2398
180....2069
271....2674
300....1923, 2304, 2306
721....1924
1051....2398

Proposed Rules:

52....302, 558, 1685, 2323, 2557, 2696
62....2323
70....2558
81....558
90....1836
122....1558
123....1558
148....1319
261....1319
268....1319
271....1319, 2696
302....1319
404....307
416....307

42 CFR

52h....272
405....1084
414....1084
419....820
447....508

Proposed Rules:

447....565

43 CFR

Proposed Rules:

4100....569, 2559

44 CFR

64....40
65....514, 516, 518
67....521, 522, 524

Proposed Rules:

67....570, 584, 586, 609

45 CFR

13....2843
1310....2513

46 CFR

12....526
401....128, 533
404....128, 533

47 CFR

2....2677
15....2677, 2848
20....2517
73....534, 535, 536, 537, 874, 2519, 2688
76....2848

Proposed Rules:

0....2862
1....2697, 2862
15....2863
61....2560, 2697, 2862
69....2560, 2697, 2862
73....611, 612, 613

48 CFR

Ch. 1....1050, 1057
1....1050
5....1051
12....1051
13....1051
14....1051
17....1051
19....1051
22....1051
25....1051
36....1050
52....1051, 1618
53....1050
202....128, 1926
204....128
211....128
212....128, 1926
213....1926
225....1926
232....1926
243....128
252....128, 1926

Proposed Rules:

2....2448, 2988
3....2448
12....2448
22....2448
23....2448
25....2448
27....2448
44....2448
47....2448
52....2448, 2988

49 CFR

192....2307
195....537
222....1930
229....1930
571....279

Proposed Rules:

571....307

50 CFR

622....1538
648....2074, 2307
660....1322

679 .....875, 1930, 1951, 2849, 2850

Proposed Rules:

17 .....1560, 1960, 2100
92.....1686
622 .....309, 310, 1278
648 .....1561, 2561, 2870
660 .....1380, 1563, 2324
679.....614, 2875

REMINDERS

The items in this list were editorially compiled as an aid to Federal Register users. Inclusion or exclusion from this list has no legal significance.

RULES GOING INTO EFFECT JANUARY 21, 2004

COMMERCE DEPARTMENT

National Oceanic and Atmospheric Administration

Fishery conservation and management:

Alaska; fisheries of Exclusive Economic Zone—

Pollock; published 1-21-04

COMMERCE DEPARTMENT

Patent and Trademark Office

Patent cases:

Inter partes reexamination and technical amendments; published 12-22-03

FEDERAL COMMUNICATIONS COMMISSION

Radio frequency devices and television broadcasting:

Commission's rules; editorial modifications; published 1-21-04

GENERAL SERVICES ADMINISTRATION

Federal travel:

eTravel service; published 12-22-03

HEALTH AND HUMAN SERVICES DEPARTMENT

Food and Drug Administration

Biological products:

Human cells, tissues, and cellular and tissue-based products; establishment registration and listing; published 1-21-03

NATIONAL AERONAUTICS AND SPACE ADMINISTRATION

Grant and Cooperative Agreement Handbook:

Central contractor registration; published 1-21-04

TRANSPORTATION DEPARTMENT

Federal Aviation Administration

Airworthiness directives:

Rolls-Royce Corp.; published 12-17-03

COMMENTS DUE NEXT WEEK

AGRICULTURE DEPARTMENT

Agricultural Marketing Service

Oranges and grapefruit grown in—

Texas; comments due by 1-26-04; published 11-25-03 [FR 03-29513]

AGRICULTURE DEPARTMENT

Debarment and suspension (nonprocurement) and drug-free workplace (grants):

Governmentwide requirements; comments due by 1-26-04; published 11-26-03 [FR 03-28454]

Procurement and property management:

Excess personal property acquisition and transfer guidelines; comments due by 1-29-04; published 12-30-03 [FR 03-32013]

COMMERCE DEPARTMENT

National Oceanic and Atmospheric Administration

Fishery conservation and management:

Magnuson-Stevens Act provisions—

Essential fish habitat; comments due by 1-26-04; published 12-11-03 [FR 03-30728]

West Coast States and Western Pacific fisheries—

Highly Migratory Species Fisheries Management Plan; comments due by 1-26-04; published 12-10-03 [FR 03-30486]

Pacific Coast groundfish; comments due by 1-30-04; published 1-15-04 [FR 04-00910]

COMMERCE DEPARTMENT

Patent and Trademark Office

Practice and procedure:

Practice before Board of Patent Appeal and Interferences; comments due by 1-26-04; published 11-26-03 [FR 03-29154]

COMMODITY FUTURES TRADING COMMISSION

Commodity Exchange Act:

Exempt commercial markets; comments due by 1-26-04; published 11-25-03 [FR 03-29437]

COURT SERVICES AND OFFENDER SUPERVISION AGENCY FOR THE DISTRICT OF COLUMBIA

Semi-annual agenda; Open for comments until further notice; published 12-22-03 [FR 03-25121]

DEFENSE DEPARTMENT

Army Department

Acquisition regulations:

Foreign acquisition; contractors accompanying the force; deployment of contractor personnel in support of military operations; comments due by 1-27-04; published 11-28-03 [FR 03-29416]

Solicitation provisions and contract clauses; contractors accompanying the force; comments due by 1-27-04; published 11-28-03 [FR 03-29417]

DEFENSE DEPARTMENT

Federal Acquisition Regulation (FAR):

Cost principles and penalties for unallowable costs; applicability; comments due by 1-27-04; published 11-28-03 [FR 03-29640]

Excluded Parties List System enhancement; comments due by 1-30-04; published 12-1-03 [FR 03-29819]

ENERGY DEPARTMENT

Acquisition regulations:

Conditional payment of fee, profit, and other incentives; comments due by 1-26-04; published 12-10-03 [FR 03-30364]

ENERGY DEPARTMENT

Federal Energy Regulatory Commission

Electric rate and corporate regulation filings:

Virginia Electric & Power Co. et al.; Open for comments until further notice; published 10-1-03 [FR 03-24818]

ENVIRONMENTAL PROTECTION AGENCY

Air pollution control:

State operating permit programs—

California; comments due by 1-28-04; published 12-29-03 [FR 03-31871]

California; comments due by 1-28-04; published 12-29-03 [FR 03-31872]

Air quality implementation plans; approval and promulgation; various States:

Maryland; comments due by 1-29-04; published 12-30-03 [FR 03-32028]

Air quality; prevention of significant deterioration (PSD):

Permit determinations, etc.—

Virgin Islands; comments due by 1-30-04; published 12-31-03 [FR 03-32207]

Virgin Islands; comments due by 1-30-04; published 12-31-03 [FR 03-32206]

Environmental statements; availability, etc.:

Coastal nonpoint pollution control program—

Minnesota and Texas; Open for comments until further notice; published 10-16-03 [FR 03-26087]

Pesticides; tolerances in food, animal feeds, and raw agricultural commodities:

Dihydroazadirachtin, etc.; comments due by 1-26-04; published 11-26-03 [FR 03-29322]

Solid wastes:

Certain recyclable hazardous secondary materials identification as not discarded; Definition revisions; comments due by 1-26-04; published 10-28-03 [FR 03-26754]

EXPORT-IMPORT BANK

Debarment and suspension (nonprocurement) and drug-free workplace (grants):

Governmentwide requirements; comments due by 1-26-04; published 11-26-03 [FR 03-28454]

FEDERAL COMMUNICATIONS COMMISSION

Common carrier services:

Incumbent local exchange carriers—

Accounting and ARMIS reporting requirements; review by Federal-State Joint Conference on Accounting Issues; effective date delay; comments due by 1-30-04; published 12-31-03 [FR 03-32148]

Radio stations; table of assignments:

Arkansas; comments due by 1-30-04; published 12-19-03 [FR 03-31258]

Arkansas and Tennessee; comments due by 1-30-04; published 12-24-03 [FR 03-31635]

Georgia; comments due by 1-30-04; published 12-23-03 [FR 03-31608]

Texas; comments due by 1-30-04; published 12-23-03 [FR 03-31605]

FEDERAL MARITIME COMMISSION

Ocean common carriers and marine terminal operators agreements; comments due by 1-30-04; published 12-2-03 [FR 03-29738]

FEDERAL RESERVE SYSTEM

Consumer leasing (Regulation M);

Clear and conspicuous disclosures; comments due by 1-30-04; published 12-10-03 [FR 03-29944]

Electronic fund transfers (Regulation E):

Clear and conspicuous disclosures; comments due by 1-30-04; published 12-10-03 [FR 03-29943]

Equal credit opportunity (Regulation B):

Clear and conspicuous disclosures; comments due by 1-30-04; published 12-10-03 [FR 03-29942]

Truth in lending (Regulation Z):

Clear and conspicuous disclosures; comments due by 1-30-04; published 12-10-03 [FR 03-29945]

Truth in savings (Regulation DD):

Clear and conspicuous disclosures; comments due by 1-30-04; published 12-10-03 [FR 03-29946]

GENERAL SERVICES ADMINISTRATION

Federal Acquisition Regulation (FAR):

Cost principles and penalties for unallowable costs; applicability; comments due by 1-27-04; published 11-28-03 [FR 03-29640]

Excluded Parties List System enhancement; comments due by 1-30-04; published 12-1-03 [FR 03-29819]

HEALTH AND HUMAN SERVICES DEPARTMENT

Centers for Medicare & Medicaid Services

Medicare:

Ambulance services; coverage and payment; 2004 inflation update; comments due by 1-29-04; published 12-5-03 [FR 03-30152]

Hospital inpatient services of psychiatric facilities; prospective payment system; comments due by 1-27-04; published 11-28-03 [FR 03-29137]

HEALTH AND HUMAN SERVICES DEPARTMENT

Food and Drug Administration

Food additives:

Acesulfame potassium; comments due by 1-30-04; published 12-31-03 [FR 03-32101]

Food for human consumption:

Food labeling—

Dietary guidance; comments due by 1-26-04; published 11-25-03 [FR 03-29448]

Milk, cream, and yogurt products; lowfat and nonfat yogurt standards revocation petition; yogurt and cultured milk standards amendment; comments due by 1-27-04; published 10-29-03 [FR 03-27188]

Human drugs:

In vivo bioequivalence data; submission requirements; comments due by 1-27-04; published 10-29-03 [FR 03-27187]

Reports and guidance documents; availability, etc.:

Evaluating safety of antimicrobial new animal drugs with regard to their microbiological effects on bacteria of human health concern; Open for comments until further notice; published 10-27-03 [FR 03-27113]

HOMELAND SECURITY DEPARTMENT

Coast Guard

Anchorage regulations:

Maryland; Open for comments until further notice; published 1-14-04 [FR 04-00749]

Drawbridge operations:

California; comments due by 1-26-04; published 11-25-03 [FR 03-29389]

New Jersey; comments due by 1-26-04; published 11-25-03 [FR 03-29388]

Ports and waterways safety:

San Carlos Bay, FL; regulated navigation area; comments due by 1-29-04; published 12-9-03 [FR 03-30446]

San Francisco Bay, CA; security zones; comments due by 1-26-04; published 11-25-03 [FR 03-29387]

HOUSING AND URBAN DEVELOPMENT DEPARTMENT

Low income housing:

Supportive housing for elderly or persons with disabilities; mixed-finance development; comments due by 1-30-04; published 12-1-03 [FR 03-29749]

INTERIOR DEPARTMENT

Fish and Wildlife Service

Endangered and threatened species:

Nesogenes rotensis, etc. (three plants from Mariana Islands and Guam); comments due by 1-26-04; published 1-9-04 [FR 04-00384]

JUSTICE DEPARTMENT

Drug Enforcement Administration

Controlled substances; manufacturers, distributors, and dispensers; registration:

Chemical registration waivers; fee exemption; comments due by 1-26-04; published 11-25-03 [FR 03-29236]

Records, reports, and exports of listed chemicals:

Drug products containing gamma-hydroxybutyric acid; comments due by 1-26-04; published 11-25-03 [FR 03-29336]

JUSTICE DEPARTMENT

Justice Programs Office

Grants:

STOP Violence Against Women Formula Grant Program and Stop Violence Against Indian Women Discretionary Grant Program; match requirement clarification; comments due by 1-29-04; published 12-30-03 [FR 03-32017]

JUSTICE DEPARTMENT

Debarment and suspension (nonprocurement) and drug-free workplace (grants):

Governmentwide requirements; comments due by 1-26-04; published 11-26-03 [FR 03-28454]

NATIONAL AERONAUTICS AND SPACE ADMINISTRATION

Federal Acquisition Regulation (FAR):

Cost principles and penalties for unallowable costs; applicability; comments due by 1-27-04; published 11-28-03 [FR 03-29640]

Excluded Parties List System enhancement; comments due by 1-30-04; published 12-1-03 [FR 03-29819]

TRANSPORTATION DEPARTMENT

Federal Aviation Administration

Air carrier certification and operations:

Repair stations; service difficulty reporting; comments due by 1-29-04; published 12-30-03 [FR 03-31884]

Airworthiness directives:

Boeing; comments due by 1-26-04; published 12-11-03 [FR 03-30675]

Bombardier; comments due by 1-30-04; published 12-31-03 [FR 03-32133]

Empresa Brasileira de Aeronautica S.A.; comments due by 1-30-04; published 12-31-03 [FR 03-32135]

McDonnell Douglas; comments due by 1-26-04; published 12-11-03 [FR 03-30674]

MD Helicopters, Inc.; comments due by 1-26-04; published 11-25-03 [FR 03-29222]

Airworthiness standards:

Aircraft engines—

General Electric Model CT7-8A, -8A5, -8B, -8B5, -8E, -8E5, -8F, and -8F5 engines; comments due by 1-31-04; published 12-24-03 [FR 03-31734]

Special conditions—

Hamilton Sundstrand Model 54460-77E propeller; comments due by 1-30-04; published 11-17-03 [FR 03-28676]

Class E airspace; comments due by 1-27-04; published 1-15-04 [FR 04-00917]

TREASURY DEPARTMENT

Debarment and suspension (nonprocurement) and drug-free workplace (grants):

Governmentwide requirements; comments due by 1-26-04; published 11-26-03 [FR 03-28454]

LIST OF PUBLIC LAWS

Note: The List of Public Laws for the first session of the 108th Congress has been completed. It will resume when bills are enacted into public law during the next session of Congress. A cumulative List of Public Laws for the first session of the 108th Congress will appear in the issue of January 30, 2004.

Last List December 24, 2003

Public Laws Electronic Notification Service (PENS)

PENS is a free electronic mail notification service of newly enacted public laws. To subscribe, go to *http://listserv.gsa.gov/archives/publaws-l.html*

Note: PENS will resume service when bills are enacted into law during the next session of Congress. This service is strictly for E-mail notification of new laws. The text of laws is not available through this service. **PENS** cannot respond to specific inquiries sent to this address.