AUTHENTICATED
U.S. GOVERNMENT
INFORMATION
GPO

Federal Register

10–10–03 Friday
Vol. 68 No. 197 Oct. 10, 2003

Pages 58575–59078

The **FEDERAL REGISTER** (ISSN 0097–6326) is published daily, Monday through Friday, except official holidays, by the Office of the Federal Register, National Archives and Records Administration, Washington, DC 20408, under the Federal Register Act (44 U.S.C. Ch. 15) and the regulations of the Administrative Committee of the Federal Register (1 CFR Ch. I). The Superintendent of Documents, U.S. Government Printing Office, Washington, DC 20402 is the exclusive distributor of the official edition. Periodicals postage is paid at Washington, DC.

The **FEDERAL REGISTER** provides a uniform system for making available to the public regulations and legal notices issued by Federal agencies. These include Presidential proclamations and Executive Orders, Federal agency documents having general applicability and legal effect, documents required to be published by act of Congress, and other Federal agency documents of public interest.

Documents are on file for public inspection in the Office of the Federal Register the day before they are published, unless the issuing agency requests earlier filing. For a list of documents currently on file for public inspection, see *http://www.nara.gov/fedreg.*

The seal of the National Archives and Records Administration authenticates the Federal Register as the official serial publication established under the Federal Register Act. Under 44 U.S.C. 1507, the contents of the **Federal Register** shall be judicially noticed.

The **Federal Register** is published in paper and on 24x microfiche. It is also available online at no charge as one of the databases on GPO Access, a service of the U.S. Government Printing Office.

The online edition of the **Federal Register** *www.access.gpo.gov/nara,* available through GPO Access, is issued under the authority of the Administrative Committee of the Federal Register as the official legal equivalent of the paper and microfiche editions (44 U.S.C. 4101 and 1 CFR 5.10). It is updated by 6 a.m. each day the **Federal Register** is published and includes both text and graphics from Volume 59, Number 1 (January 2, 1994) forward.

For more information about GPO Access, contact the GPO Access User Support Team, call toll free 1-888-293-6498; DC area 202-512-1530; fax at 202-512-1262; or via email at *gpoaccess@gpo.gov.* The Support Team is available between 7:00 a.m. and 5:30 p.m. Eastern Time, Monday–Friday, except official holidays.

The annual subscription price for the **Federal Register** paper edition is $699, or $764 for a combined **Federal Register, Federal Register** Index and List of CFR Sections Affected (LSA) subscription; the microfiche edition of the **Federal Register** including the **Federal Register** Index and LSA is $264. Six month subscriptions are available for one-half the annual rate. The charge for individual copies in paper form is $10.00 for each issue, or $10.00 for each group of pages as actually bound; or $2.00 for each issue in microfiche form. All prices include regular domestic postage and handling. International customers please add 40% for foreign handling. Remit check or money order, made payable to the Superintendent of Documents, or charge to your GPO Deposit Account, VISA, MasterCard, American Express, or Discover. Mail to: New Orders, Superintendent of Documents, P.O. Box 371954, Pittsburgh, PA 15250-7954; or call toll free 1-866-512-1800, DC area 202-512-1800; or go to the U.S. Government Online Bookstore site, *bookstore@gpo.gov.*

There are no restrictions on the republication of material appearing in the **Federal Register.**

How To Cite This Publication: Use the volume number and the page number. Example: 68 FR 12345.

Postmaster: Send address changes to the Superintendent of Documents, Federal Register, U.S. Government Printing Office, Washington DC 20402, along with the entire mailing label from the last issue received.

SUBSCRIPTIONS AND COPIES

PUBLIC	
Subscriptions:	
Paper or fiche	**202–512–1800**
Assistance with public subscriptions	**202–512–1806**
General online information	**202–512–1530; 1–888–293–6498**
Single copies/back copies:	
Paper or fiche	**202–512–1800**
Assistance with public single copies	**1–866–512–1800 (Toll-Free)**
FEDERAL AGENCIES	
Subscriptions:	
Paper or fiche	**202–741–6005**
Assistance with Federal agency subscriptions	**202–741–6005**

What's NEW!

Federal Register Table of Contents via e-mail

Subscribe to FEDREGTOC, to receive the **Federal Register** Table of Contents in your e-mail every day.

If you get the HTML version, you can click directly to any document in the issue.

To subscribe, go to **http://listserv.access.gpo.gov** and select:

Online mailing list archives
FEDREGTOC-L
Join or leave the list

Then follow the instructions.

Printed on recycled paper.

Contents

Federal Register

Vol. 68, No. 197

Friday, October 10, 2003

Agricultural Marketing Service
PROPOSED RULES
Cherries (sweet) grown in—
Washington, 58636–58638
Potatoes (Irish) grown in—
Washington, 58638–58640
NOTICES
Agency information collection activities; proposals, submissions, and approvals, 58647–58648

Agricultural Research Service
NOTICES
Patent licenses; non-exclusive, exclusive, or partially exclusive:
Agdia Inc., 58648
Next Pharmaceuticals, Inc., 58648
zuChem, Inc., 58648

Agriculture Department
See Agricultural Marketing Service
See Agricultural Research Service
See Animal and Plant Health Inspection Service
See Forest Service

Air Force Department
NOTICES
Meetings:
Air University Board of Visitors, 58664
Science Advisory Board, 58664–58665

Alcohol and Tobacco Tax and Trade Bureau
RULES
Electronic signatures; electronic submission of forms, 58600–58603
NOTICES
Agency information collection activities; proposals, submissions, and approvals, 58750–58753

Animal and Plant Health Inspection Service
RULES
Animal welfare:
Transportation of animals on foreign air carriers, 58575–58577

Army Department
See Engineers Corps
NOTICES
Patent licenses; non-exclusive, exclusive, or partially exclusive:
Enzymatic detoxification of organophosphorus compounds, 58665

Blind or Severely Disabled, Committee for Purchase From People Who Are
See Committee for Purchase From People Who Are Blind or Severely Disabled

Centers for Disease Control and Prevention
NOTICES
Agency information collection activities; proposals, submissions, and approvals, 58687–58689

Centers for Medicare & Medicaid Services
RULES
Medicare:
Skilled nursing facilities; prospective payment system and consolidated billing; update
Correction, 58756
NOTICES
Agency information collection activities; proposals, submissions, and approvals, 58689–58690

Civil Rights Commission
NOTICES
Meetings; Sunshine Act, 58652

Coast Guard
RULES
Ports and waterways safety:
Ohio River—
Cincinnati, OH; safety zone, 58606–58608
Portland, OR—
Captain of Port Zone, OR; safety zones, 58604–58606
Prospect Bay, Kent Island Narrows, MD; regulated navigational area, 58603–58604
PROPOSED RULES
Drawbridge operations:
Florida, 58642–58644
Regattas and marine parades:
International Tug-of-War, MD, 58640–58642

Commerce Department
See Foreign-Trade Zones Board
See Industry and Security Bureau
See International Trade Administration
See National Oceanic and Atmospheric Administration

Committee for Purchase From People Who Are Blind or Severely Disabled
NOTICES
Procurement list; additions and deletions, 58650–58652

Commodity Futures Trading Commission
RULES
Foreign futures and options transactions:
UK regulatory and self-regulatory organizations, 58583–58587

Defense Department
See Air Force Department
See Army Department
See Engineers Corps
RULES
Federal Acquisition Regulation (FAR):
Unique item identification and valuation; supplement, 58631–58635

Drug Enforcement Administration
RULES
Controlled substances; manufacturers, distributors, and dispensers; registration:
Diversion Control Program; registration and reregistration application fee schedule; adjustment, 58587–58600

Employment and Training Administration
NOTICES
Adjustment assistance:
Agere Systems, 58708
Apparel Ventures, Inc., 58708
Ault Inc., 58708
Brad Aga Setnet Operation, 58708
BSN-JOBST, Inc., 58708
Carolina Pad & Paper Co., et al., 58708–58710
Chevron Products Co., 58710
Compaq Computer Corp., 58710–58711
Eureka Co., 58711
Fishing Vessel (F/V) Rimrock, 58711
Hanes Dye & Finishing Co., 58711
Honeywell Nylon, Inc., 58711–58712
Implementation Strategies, Inc., 58712
Jacksonlea, 58712
Joy Mining Machinery, et al., 58712–58713
Lego Systems, Inc., 58713
Markwins Beauty Products, Inc, 58713
Micro Instrument Co., 58713–58714
Miller Casket Co., 58714
Multilayer Technology (Multek), Inc., 58714
Nokia, Inc., 58714–58715
Paxar Corp., 58715
Progressive Screen Engraving, Inc., 58715
PSC Metals, Inc., 58716
Redman Knitting Inc., 58716
Sisiutl Fisheries, 58716
Snap-on Tools, 58717
Taylor Precision Products, et al., 58717–58718
Textron Fastening Systems et al., 58718–58722
Vesuvius USA, 58722
White Rodgers Coils Division, 58722–58723
Wirco Castings, Inc., 58723
W-Phone, Inc., 58722

Employment Standards Administration
NOTICES
Minimum wages for Federal and federally-assisted construction; general wage determination decisions, 58723–58724

Engineers Corps
NOTICES
Environmental statements; notice of intent:
Hendry County, FL; Caloosahatchee River Aquifer Storage and Recovery Pilot Projects, 58665–58666
San Bernardino County, CA; Big Bear Lake aquatic ecosytem restoration, 58666–58667

Environmental Protection Agency
RULES
Air pollutants, hazardous; national emission standards:
Primary magnesium refining facilities, 58615–58629
Air quality implementation plans; approval and promulgation; various States:
Nevada, 58613–58615
Pennsylvania, 58608–58613
PROPOSED RULES
Air pollution; standards of performance for new stationary sources:
Instrumental test methods; harmonize, simplify, and update, 58837–58866
Air quality implementation plans; approval and promulgation; various States:
Nevada, 58646
Pennsylvania, 58644–58646
Water programs:
Water quality standards—
Oregon, 58757–58790
NOTICES
Environmental statements; availability, etc.:
Agency statements—
Comment availability, 58667–58668
Weekly receipts, 58668–58669
Meetings:
Local Government Advisory Committee, 58669–58670
Privacy Act:
Systems of records, 58670–58672
Superfund; response and remedial actions, proposed settlements, etc.:
Windham Alloys Site, 58672–58673

Federal Aviation Administration
RULES
Airworthiness directives:
Eurocopter Deutschland GmbH, 58581–58582
Raytheon, 58578–58581
Class E airspace, 58582–58583
NOTICES
Advisory circulars; availability, etc.:
Transport category airplanes—
Powerplant and auxilliary power unit installations, 58746
Environmental statements; notice of intent:
Pueblo Memorial Airport, CO, 58747

Federal Communications Commission
RULES
Common carrier services:
Satellite communications—
Alaska; domestic satellite earth stations licensing in bush communities, 58629–58631
NOTICES
Agency information collection activities; proposals, submissions, and approvals, 58673
Rulemaking proceedings; petitions filed, granted, denied, etc., 58673–58674

Federal Housing Finance Board
NOTICES
Federal home loan bank system:
Community support review; members selected for review; list, 58674–58682

Federal Reserve System
NOTICES
Banks and bank holding companies:
Change in bank control, 58682
Formations, acquisitions, and mergers, 58682–58683

Federal Trade Commission
NOTICES
Agency information collection activities; proposals, submissions, and approvals, 58683–58684
Premerger notification waiting periods; early terminations, 58684–58687

Food and Drug Administration
RULES
Public Health Security and Bioterrorism Preparedness and Response Act of 2002;
Food facilities registration, 58893–58974
Food importation notice to FDA, 58973–59077

NOTICES
Agency information collection activities; proposals, submissions, and approvals, 58690–58692
Reports and guidance documents; availability, etc.:
Food terrorism and other food safety concerns; risk assessment, 59077–59078

Foreign-Trade Zones Board
NOTICES
Applications, hearings, determinations, etc.:
New Jersey, 58652
Puerto Rico, 58652–58653

Forest Service
NOTICES
Environmental statements; notice of intent:
Lost Cabin Mine, Medicine Bow-Routt National Forests, WY, 58649–58650

Health and Human Services Department
See Centers for Disease Control and Prevention
See Centers for Medicare & Medicaid Services
See Food and Drug Administration
See National Institutes of Health
See Public Health Service

Homeland Security Department
See Coast Guard

Housing and Urban Development Department
NOTICES
Agency information collection activities; proposals, submissions, and approvals, 58701–58702
Grants and cooperative agreements; availability, etc.:
Facilities to assist the homeless—
Excess and surplus Federal property, 58702
Urban Scholars Fellowship Program, 58867–58891

Industry and Security Bureau
NOTICES
Meetings:
Sensors and Instrumentation Technical Advisory Committee, 58653

Interior Department
See Land Management Bureau
See Minerals Management Service
See Reclamation Bureau

Internal Revenue Service
NOTICES
Agency information collection activities; proposals, submissions, and approvals, 58753–58754
Meetings:
Taxpayer Advocacy Panels, 58755

International Trade Administration
NOTICES
Antidumping:
Folding gift boxes from—
China, 58653–58658
Persulfates from—
China, 58658–58660
Stainless steel bar from—
United Kingdom, 58661–58662
Various countries, 58660–58661

International Trade Commission
NOTICES
Meetings; Sunshine Act, 58706

Justice Department
See Drug Enforcement Administration
See Justice Programs Office

Justice Programs Office
NOTICES
Meetings:
Amber Alert Technology Conference, 58706

Labor Department
See Employment and Training Administration
See Employment Standards Administration
See Occupational Safety and Health Administration
NOTICES
Agency information collection activities; proposals, submissions, and approvals, 58707–58708

Land Management Bureau
NOTICES
Environmental statements; availability, etc.:
Headwaters Forest Reserve Resource Management Plan, CA, 58702–58703
Meetings:
Resource Advisory Councils—
Upper Columbia-Salmon Clearwater District, 58704
Utah, 58703–58704
Survey plat filings:
Colorado, 58704–58705
Idaho, 58705

Minerals Management Service
NOTICES
Outer Continental Shelf operations:
Oil and gas lease sales—
Restricted joint bidders list, 58705

National Aeronautics and Space Administration
NOTICES
Meetings:
Advisory Council, 58724–58725
Space Science Advisory Committee, 58725

National Communications System
NOTICES
Meetings:
Telecommunications Service Priority System Oversight Committee, 58725

National Institutes of Health
NOTICES
Meetings:
Interagency Autism Coordinating Committee, 58692
National Cancer Institute, 58692–58694
National Center for Research Resources, 58694
National Heart, Lung, and Blood Institute, 58694–58695
National Human Genome Research Institute, 58695
National Institute of Allergy and Infectious Diseases, 58696
National Institute of Dental and Craniofacial Research, 58696–58697
National Institute of Diabetes and Digestive and Kidney Diseases, 58695
National Institute of Mental Health, 58696
National Institute of Neurological Disorders and Stroke, 58697
National Institute on Alcohol Abuse and Alcoholism, 58696
Recombinant DNA Advisory Committee, 58697–58698

Scientific Review Center, 58698–58699
Senior Executive Service:
Performance Review Board; membership, 58699
Submission for OMB review; comment request, 58699–58700

National Oceanic and Atmospheric Administration
NOTICES
Marine mammals:
Incidental taking; authorization letters, etc.—
Scripps Institution of Oceanography; CA; North Pacific Acoustic laboratory; low frequency sound source, 58662
Meetings:
Gulf of Mexico Fishery Management Council, 58662–58663
Permits:
Marine mammals, 58663–58664

Nuclear Regulatory Commission
RULES
Electronic maintenance and submission of information, 58791–58835
NOTICES
Regulatory guides; issuance, availability, and withdrawal, 58727–58728
Applications, hearings, determinations, etc.:
Pacific Gas & Electric Co., 58726–58727
STP Nuclear Operating Co., 58727
Union Electric Co., 58727

Occupational Safety and Health Administration
NOTICES
Agency information collection activities; proposals, submissions, and approvals, 58724

Postal Service
NOTICES
Meetings; Sunshine Act, 58728

Public Debt Bureau
NOTICES
Senior Executive Service:
Performance Review Board; membership, 58755

Public Health Service
NOTICES
Reports and guidance documents; availability, etc.:
National Toxicology Program—
NTP-CERHR Monograph on Methanol, 58700–58701

Reclamation Bureau
NOTICES
Meetings:
Colorado River Basin Salinity Control Advisory Council, 58705–58706

Securities and Exchange Commission
NOTICES
Meetings; Sunshine Act, 58728
Self-regulatory organizations; proposed rule changes:
Chicago Board Options Exchange, Inc., 58728–58732
National Association of Securities Dealers, Inc., 58732–58735
OneChicago, LLC, 58735–58737

Small Business Administration
NOTICES
Disaster loan areas:
Virginia, 58737–58738
West Virginia, 58738
Meetings:
Regulatory Fairness Boards—
Region III, 58738

State Department
NOTICES
Foreign terrorists and terrorist organizations; designation:
Basque Fatherland and Liberty et al., 58738
Kahane Chai et al., 58738–58739
Grants and cooperative agreements; availability, etc.:
Partnerships for Learning Undergraduate Studies Program, 58739–58741
Pre-Academic English Language Training and Academic Readiness, 58741–58744
Meetings:
International Communications and Information Policy Advisory Committee, 58744
North Pacific Anadromous Fish Commission U.S. Section Advisory Panel, 58744

Surface Transportation Board
NOTICES
Railroad services abandonment:
Paducah & Louisville Railway, Inc., 58747–58748
Union Pacific Railroad Co., 58748–58749
Wyoming and Colorado Railroad Co., 58749

Transportation Department
See Federal Aviation Administration
See Surface Transportation Board
See Transportation Statistics Bureau
NOTICES
Agency information collection activities; proposals, submissions, and approvals, 58744–58746
Aviation proceedings:
Agreements filed, etc., 58746

Transportation Statistics Bureau
NOTICES
Meetings:
Transportation Statistics Advisory Council, 58749–58750

Treasury Department
See Alcohol and Tobacco Tax and Trade Bureau
See Internal Revenue Service
See Public Debt Bureau
NOTICES
Meetings:
Debt Mangement Advisory Committee, 58750

Separate Parts In This Issue

Part II
Environmental Protection Agency, 58757–58790

Part III
Nuclear Regulatory Commission, 58791–58835

Part IV
Environmental Protection Agency, 58837–58866

Part V
Housing and Urban Development Department, 58867–58891

Part VI
Health and Human Services Department, Food and Drug Administration, 58893–59077

Reader Aids
Consult the Reader Aids section at the end of this issue for phone numbers, online resources, finding aids, reminders, and notice of recently enacted public laws.

To subscribe to the Federal Register Table of Contents LISTSERV electronic mailing list, go to http://listserv.access.gpo.gov and select Online mailing list archives, FEDREGTOC-L, Join or leave the list (or change settings); then follow the instructions.

CFR PARTS AFFECTED IN THIS ISSUE

A cumulative list of the parts affected this month can be found in the Reader Aids section at the end of this issue.

7 CFR

Proposed Rules:

923 58636
946 58638

9 CFR

1 58575
2 58575
3 58575

10 CFR

Ch. I 58792

14 CFR

39 (2 documents) 58578, 58581
71 58582

17 CFR

30 58583

21 CFR

1 (2 documents) 58894, 58974
20 58894
1301 58587

27 CFR

73 58600

33 CFR

100 58603
165 (2 documents) 58604, 58606

Proposed Rules:

100 58640
117 58642

40 CFR

52 58608
62 58613
63 58615

Proposed Rules:

52 58644
60 58838
62 58646
131 58758

42 CFR

409 58756
411 58756
413 58756
440 58756
483 58756
488 58756
489 58756

47 CFR

1 58629
25 58629

48 CFR

202 58631
204 58631
211 58631
212 58631
243 58631
252 58631

Rules and Regulations

Federal Register
Vol. 68, No. 197
Friday, October 10, 2003

This section of the FEDERAL REGISTER contains regulatory documents having general applicability and legal effect, most of which are keyed to and codified in the Code of Federal Regulations, which is published under 50 titles pursuant to 44 U.S.C. 1510.

The Code of Federal Regulations is sold by the Superintendent of Documents. Prices of new books are listed in the first FEDERAL REGISTER issue of each week.

DEPARTMENT OF AGRICULTURE

Animal and Plant Health Inspection Service

9 CFR Parts 1, 2, and 3

[Docket No. 02–012–1]

RIN 0579–AB51

Animal Welfare; Transportation of Animals on Foreign Air Carriers

AGENCY: Animal and Plant Health Inspection Service, USDA.

ACTION: Determination to regulate and request for comments.

SUMMARY: In this document, we are giving notice of, and requesting comment on, our intent to begin applying the Animal Welfare Act (AWA) regulations and standards for the humane transportation of animals in commerce to all foreign air carriers operating to or from any point within the United States, its territories, possessions, or the District of Columbia. While these AWA regulations and standards have been enforced on U.S. air carriers, foreign air carriers, as a matter of policy, have not been asked to comply with the regulations, although some have done so voluntarily. Our determination to begin regulating foreign air carriers will ensure that any animal covered by the AWA, whether coming into, traveling from point to point in, or leaving the United States, its territories, possessions, or the District of Columbia, will be provided the protection of the AWA regulations and standards. We intend to begin applying these AWA regulations and standards unless substantial issues bearing on the effects of this action are brought to our attention.

DATES: This determination to regulate will be effective on April 7, 2004, unless we receive comments raising substantial issues bearing on the effects of this action by December 9, 2003 (*see* ''Effective Date and Request for Comments'' under **SUPPLEMENTARY INFORMATION**).

ADDRESSES: You may submit comments by postal mail/commercial delivery or by e-mail. If you use postal mail/commercial delivery, please send four copies of your comment (an original and three copies) to: Docket No. 02–012–1, Regulatory Analysis and Development, PPD, APHIS, Station 3C71, 4700 River Road Unit 118, Riverdale, MD 20737–1238. Please state that your comment refers to Docket No. 02–012–1. If you use e-mail, address your comment to *regulations@aphis.usda.gov.* Your comment must be contained in the body of your message; do not send attached files. Please include your name and address in your message and ''Docket No. 02–012–1'' on the subject line.

You may read any comments that we receive in our reading room. The reading room is located in room 1141 of the USDA South Building, 14th Street and Independence Avenue, SW., Washington, DC. Normal reading room hours are 8 a.m. to 4:30 p.m., Monday through Friday, except holidays. To be sure someone is there to help you, please call (202) 690–2817 before coming.

APHIS documents published in the **Federal Register**, and related information, including the names of organizations and individuals who have commented on APHIS dockets, are available on the Internet at *http://www.aphis.usda.gov/ppd/rad/webrepor.html.*

FOR FURTHER INFORMATION CONTACT: Dr. Jerry DePoyster, Senior Veterinary Medical Officer, Animal Care, APHIS, 4700 River Road Unit 84, Riverdale, MD 20737–1236; (301) 734–7586.

SUPPLEMENTARY INFORMATION:

Background

The Animal Welfare regulations contained in 9 CFR chapter I, subchapter A, part 3 (referred to below as ''the regulations'') provide standards for the humane handling, care, treatment, and transportation, by regulated entities, of animals covered by the Animal Welfare Act (AWA, 7 U.S.C. 2131 *et seq.*). The regulations in part 3 are divided into six subparts, designated as subparts A through F, each of which contains facility and operating standards, animal health and husbandry standards, and transportation standards for a specific category of animals. These subparts consist of the following: Subpart A—dogs and cats; subpart B—guinea pigs and hamsters; subpart C—rabbits; subpart D—nonhuman primates; subpart E—marine mammals; and subpart F—warmblooded animals other than dogs, cats, rabbits, hamsters, guinea pigs, nonhuman primates, and marine mammals. Transportation standards for dogs and cats are contained in §§ 3.13 through 3.19; for guinea pigs and hamsters, in §§ 3.35 through 3.41; for rabbits, in §§ 3.60 through 3.66; for nonhuman primates, in §§ 3.86 through 3.92; for marine mammals, in §§ 3.112 through 3.118; and for all other warmblooded animals, in §§ 3.136 through 3.142.

A carrier is defined in § 1.1 as ''the operator of any airline, railroad, motor carrier, shipping line, or other enterprise which is engaged in the business of transporting animals for hire.''

While the Animal Care unit of the U.S. Department of Agriculture's (USDA's) Animal and Plant Health Inspection Service (APHIS) currently enforces the AWA regulations and standards on U.S. air carriers, foreign air carriers (as defined in 49 U.S.C 40102) operating in the United States have not been regulated as a matter of policy. We believe that animals being transported by foreign air carriers operating to or from any point within the United States, its territories, possessions, or the District of Columbia should be afforded the same protection under the AWA as if they were being transported by U.S. air carriers. This determination to regulate gives notice that APHIS intends to begin applying the AWA transportation regulations and standards to all foreign air carriers operating to or from any point within the United States, its territories, possessions, or the District of Columbia.

There are approximately 517 foreign air carriers which hold currently effective economic authority from the U.S. Department of Transportation to conduct operations in foreign air transportation to and from the United States. In order to ensure the widest possible notice of our determination to begin applying AWA regulations and standards on foreign air carriers, we intend to mail these carriers copies of this notice. In this way, the airlines will

be informed that, beginning 180 days after the publication of this determination to regulate, they will be subject to the transportation regulations and standards of the AWA while in the United States, its territories, possessions, or the District of Columbia. Also, copies of this notice will be sent to trade organizations involved with air transportation of animals, such as the Animal Transportation Association, Air Transport Association, and International Air Transportation Association (IATA), with a request that copies be included in newsletters they send to their members. These organizations have been consulted with regard to this determination to regulate, and we have been coordinating with them on a regular basis.

Effective Date and Request for Comments

Although we have been consulting and coordinating with the trade organizations cited above and, by extension, their member airlines, we believe it is appropriate to provide an opportunity for affected entities to comment prior to this determination to regulate becoming effective. Therefore, we are soliciting comments on this determination to regulate for a period of 60 days. If, through the comments we receive, substantial issues bearing on the effects of this action are brought to our attention, we will publish a notice in the **Federal Register** prior to the effective date of this determination to regulate to inform the public as to what action we will be taking to address those issues. Conversely, if the comments we receive yield no substantial issues, we will publish a notice in the **Federal Register** confirming the effective date.

Effects of This Determination to Regulate

Within 180 days after publication of this notice, each foreign air carrier will need to complete an AWA registration form pursuant to § 2.25 of the AWA regulations, which may be obtained by calling the APHIS Animal Care Western Regional Office at (970) 494–7478 or the Eastern Regional Office at (919) 716–5532. Registered foreign air carriers will need to provide Animal Care with a U.S. business address or the address of an agent where the records required to be kept pursuant to the AWA regulations will be available for inspection. Animal Care inspectors will conduct unannounced inspections of the overall health and condition of the animals being transported, their enclosures, environmental factors, and required records upon the foreign air carrier's arrival within the United States, its territories, possessions, or the District of Columbia. Carriers that violate the AWA by failing to meet the AWA transportation regulations and standards are subject to fines and/or penalties.

We believe that the 180-day delay in the effective date of applying AWA regulations and standards to the operations of foreign air carriers should allow adequate time for them to become familiar with the provisions of the AWA and the AWA transportation regulations and standards and to make any necessary changes in procedure. Many foreign air carriers are members of the IATA and may already be in compliance with most of the physical requirements of the regulations and standards of the AWA. The IATA regulations generally meet or exceed the intent of the AWA in ensuring the humane and safe transportation of animals, but diverge from the USDA regulations primarily in their recordkeeping requirements. Under this determination to regulate, where such divergences exist, the AWA regulations will take precedence.

This action will require foreign air carriers operating to or from any point within the United States, its territories, possessions, or the District of Columbia to meet certain requirements of the AWA transportation regulations and standards that are not contained in the IATA regulations. For example, various sections of the transportation standards in 9 CFR part 3 require that no live animals can be presented to a carrier more than 4 hours before the scheduled departure time of the flight on which the animal is to be transported. With prior arrangements, this time may be extended to 6 hours. The IATA regulations contain no such provision. Various sections of the transportation standards in 9 CFR part 3 also have specific primary enclosure requirements which differ from those of the IATA. Most often, the IATA space requirements for animals are consistent with the AWA requirements, but with at least one species—the guinea pig—the space requirements are not consistent with the AWA requirements. Various sections of the transportation standards in 9 CFR part 3 also have minimum and maximum temperature requirements for holding areas for animals in transit (usually 45 or 50 °F to 85 °F). The IATA regulations, in contrast, do not mandate minimum or maximum temperatures. Instead, guidelines are offered for acceptable temperature ranges for various species in transport.

In addition to the physical requirements, foreign air carriers operating to or from any point within the United States, its territories, possessions, or the District of Columbia, will have to meet recordkeeping requirements set out in the AWA regulations. Records that foreign air carriers will have to keep and maintain include a copy of the consignor's written guarantee of payment for transportation for C.O.D. shipments, a shipping document, and an animal health certificate executed and issued by a licensed veterinarian. In addition, depending on the species, the AWA regulations may require that instructions for the administration of drugs, medication, other special care, food, and water, as well as other shipping documents, be attached to the outside of the animal's primary enclosure.

This determination to regulate will not necessitate any changes to the current AWA transportation regulations or standards but will increase Animal Care's inspection activities. The increased burden on Animal Care is not likely to be significant, however, because Animal Care inspectors already perform inspections at the airports that foreign air carriers use.

This determination to regulate will ensure that any animal covered by the AWA, whether coming into, traveling from point to point in, or leaving the United States, its territories, possessions, or the District of Columbia, will be provided the protection of the AWA regulations and standards.

Therefore, unless substantial issues bearing on the effects of this action are brought to our attention, APHIS intends to begin applying the AWA transportation regulations and standards to foreign air carriers operating to or from any point within the United States, its territories, possessions, or the District of Columbia 180 days from the date of publication in the **Federal Register** of this notice.

Executive Order 12866 and Regulatory Flexibility Act

This determination to regulate rule has been reviewed under Executive Order 12866. The determination to regulate has been determined to be significant for the purposes of Executive Order 12866 and, therefore, has been reviewed by the Office of Management and Budget.

This document gives notice that we intend to begin applying the AWA regulations and standards for the humane transportation of animals in commerce to all foreign air carriers operating to or from any point within the United States, its territories, possessions, or the District of Columbia.

For the reasons discussed earlier in this document, we do not expect that there will be any significant economic

effects on entities affected by this determination to regulate (*i.e.*, foreign air carriers and APHIS). We note that many foreign air carriers are members of the IATA and observe that organization's regulations regarding animal transport, which generally meet or exceed the intent of the AWA in ensuring the humane and safe transportation of animals. Thus, many foreign air carriers may already be in compliance with most of the physical requirements of the regulations and standards of the AWA. The primary aspect in which the IATA regulations diverge from the USDA regulations is in their recordkeeping requirements; as we note below under ''Paperwork Reduction Act, ''we expect that the additional time that foreign air carriers will need to expend in order to comply with the reporting and recordkeeping requirements of the AWA regulations will be minimal. While the routine inspection of foreign air carriers will lead to an increased inspection burden on APHIS' Animal Care inspectors, that burden is not likely to be significant because those inspectors already perform inspections at the airports that foreign air carriers use.

As an alternative to this determination to regulate, we considered maintaining the status quo, *i.e.*, continuing with our policy of not applying the requirements of the regulations to foreign air carriers. While some foreign air carriers voluntarily comply with the regulations and many others observe the IATA's regulations regarding animal transport, such compliance or observance is not universal. To ensure that animals being transported to or from any point within the United States, its territories, possessions, or the District of Columbia are afforded consistent protection, regardless of whether they are being transported by foreign air carriers or U.S. air carriers, we have determined that it is necessary to begin applying the AWA transportation regulations and standards to all foreign air carriers operating to or from any point within the United States, its territories, possessions, or the District of Columbia.

We believe that the small additional costs associated with this determination to regulate will be outweighed by the benefits of ensuring that animals being transported by foreign air carriers operating to or from any point within the United States, its territories, possessions, or the District of Columbia are afforded the same protection under the AWA as if they were being transported by U.S. air carriers.

Under these circumstances, the Administrator of the Animal and Plant Health Inspection Service has determined that this determination to regulate will not have a significant economic impact on a substantial number of small entities.

Paperwork Reduction Act

In accordance with section 3507(d) of the Paperwork Reduction Act of 1995 (44 U.S.C. 3501 *et seq.*), the information collection or recordkeeping requirements included in this determination to regulate have been submitted for approval to the Office of Management and Budget (OMB). Please send written comments concerning the information collection or recordkeeping requirements included in this determination to regulate to the Office of Information and Regulatory Affairs, OMB, Attention: Desk Officer for APHIS, Washington, DC 20503. Please state that your comments refer to Docket No. 02–012–1. Please send a copy of your comments to: (1) Docket No. 02–012–1, Regulatory Analysis and Development, PPD, APHIS, Station 3C71, 4700 River Road Unit 118, Riverdale, MD 20737–1238, and (2) Clearance Officer, OCIO, USDA, room 404–W, 14th Street and Independence Avenue, SW., Washington, DC 20250.

Within 180 days after publication of this determination to regulate, every foreign air carrier operating to or from any point within the United States, its territories, possessions, or the District of Columbia will need to complete a registration form. Registered foreign air carriers will also be required to keep and maintain records required under the AWA regulations pertaining to animal transport. These records may include a copy of the consignor's written guarantee of payment for transportation for C.O.D. shipments; a shipping document; an animal health certificate executed and issued by a licensed veterinarian; and, if needed, an acclimation statement indicating that the animal being transported can withstand temperatures colder or warmer than the minimums or maximums specified in the regulations. In addition, depending on the species, the regulations may require that instructions for the administration of drugs, medication, other special care, food, and water, as well as other shipping documents, be attached to the outside of the animal's primary enclosure.

We are soliciting comments from the public (as well as affected agencies) concerning our proposed information collection and recordkeeping requirements. These comments will help us:

(1) Evaluate whether the proposed information collection is necessary for the proper performance of our agency's functions, including whether the information will have practical utility;

(2) Evaluate the accuracy of our estimate of the burden of the proposed information collection, including the validity of the methodology and assumptions used;

(3) Enhance the quality, utility, and clarity of the information to be collected; and

(4) Minimize the burden of the information collection on those who are to respond (such as through the use of appropriate automated, electronic, mechanical, or other technological collection techniques or other forms of information technology; *e.g.*, permitting electronic submission of responses).

Estimate of burden: Public reporting burden for this collection of information is estimated to average 0.162037 hours per response.

Respondents: Foreign air carriers transporting animals covered by the Animal Welfare Act.

Estimated annual number of respondents: 20.

Estimated annual number of responses per respondent: 54.

Estimated annual number of responses: 1,080.

Estimated total annual burden on respondents: 175 hours. (Due to averaging, the total annual burden hours may not equal the product of the annual number of responses multiplied by the reporting burden per response.)

Copies of this information collection can be obtained from Mrs. Celeste Sickles, APHIS'' Information Collection Coordinator, at (301) 734–7477.

Government Paperwork Elimination Act Compliance

The Animal and Plant Health Inspection Service is committed to compliance with the Government Paperwork Elimination Act (GPEA), which requires Government agencies in general to provide the public the option of submitting information or transacting business electronically to the maximum extent possible. For information pertinent to GPEA compliance related to this interim rule, please contact

Authority: 7 U.S.C. 2131–2159; 7 CFR 2.22, 2.80, and 371.7.

Done in Washington, DC, this 6th day of October, 2003.

Bill Hawks,

Under Secretary for Marketing and Regulatory Programs.

[FR Doc. 03–25788 Filed 10–9–03; 8:45 am]

BILLING CODE 3410–34–P

DEPARTMENT OF TRANSPORTATION

Federal Aviation Administration

14 CFR Part 39

[Docket No. 2003–CE–43–AD; Amendment 39–13328; AD 2003–20–10]

RIN 2120–AA64

Airworthiness Directives; Raytheon Aircraft Company Beech Models 1900, 1900C, and 1900D Airplanes

AGENCY: Federal Aviation Administration (FAA), DOT.

ACTION: Final rule; request for comments.

SUMMARY: The FAA is adopting a new airworthiness directive (AD) that applies to all Raytheon Aircraft Company (Raytheon) Beech Models 1900, 1900C, and 1900D airplanes. This AD requires you to make a correction to the elevator trim system maintenance procedures, incorporate a temporary revision to the applicable maintenance manual, and incorporate procedures that will enhance the existing elevator trim operational check every time you have maintenance done on the elevator trim system. This AD is the result of an analysis of the maintenance procedures of the elevator trim system. We are issuing this AD to detect and correct any maintenance-induced problems with the elevator trim system installation before problems occur during operation. Such a condition could lead to difficulties in controlling the airplane or a total loss of pitch control.

DATES: This AD becomes effective on October 15, 2003.

The Director of the Federal Register approved the incorporation by reference of certain publications listed in the regulation as of October 15, 2003.

We must receive any comments on this AD by December 7, 2003.

ADDRESSES: Use one of the following to submit comments on this AD:

- *By mail:* FAA, Central Region, Office of the Regional Counsel, Attention: Rules Docket No. 2003–CE–43–AD, 901 Locust, Room 506, Kansas City, Missouri 64106.
- *By fax:* (816) 329–3771.
- *By e-mail: 9-ACE-7-Docket@faa.gov.* Comments sent electronically must contain ''Docket No. 2003–CE–43–AD'' in the subject line. If you send comments electronically as attached electronic files, the files must be formatted in Microsoft Word 97 for Windows or ASCII.

You may get the service information identified in this AD from Raytheon Aircraft Company, 9709 E. Central, Wichita, Kansas 67201–0085; telephone: (800) 429–5372 or (316) 676–3140.

You may view the AD docket at FAA, Central Region, Office of the Regional Counsel, Attention: Rules Docket No. 2003–CE–43–AD, 901 Locust, Room 506, Kansas City, Missouri 64106. Office hours are 8 a.m. to 4 p.m., Monday through Friday, except Federal holidays.

FOR FURTHER INFORMATION CONTACT: Chris B. Morgan, Aerospace Engineer, FAA, Wichita Aircraft Certification Office, 1801 Airport Road, Room 100, Mid-Continent Airport, Wichita, Kansas 67209; telephone: (316) 946–4154; facsimile: (316) 946–4107.

SUPPLEMENTARY INFORMATION:

Discussion

What Events Have Caused This AD?

On August 26, 2003, a Raytheon Model Beech 1900D twin-turboprop airplane was involved in an accident in the Nantucket Sound off southeastern Massachusetts. The Raytheon Beech Model 1900D is designed to carry 19 passengers. According to initial reports, the airplane took off of Runway 24 at Barnstable Municipal Airport on Cape Cod. The pilot immediately declared an emergency and, while en route to make an emergency landing on Runway 33, crashed into the water.

While there is no determination of the cause of the accident and the investigation is ongoing, FAA's review of the current maintenance procedures of the elevator trim system reveals the following:

—The figures in the applicable maintenance manuals depict the elevator trim cable drum at 180 degrees from the installed position and show the open, keyed side of the drum instead of the flat side of the drum. Following these figures when installing the control cables on the forward control cable drum could reverse the action of the elevator manual trim system; and

—The existing procedure can be enhanced by visually confirming the trim wheel position and the trim tab position are consistent. Such a check would detect and correct any problems with the elevator trim system installation before problems occur during operation.

Although the figures (figure 9 for the 1900/1900C and figure 201 for the 1900D) in the existing maintenance manuals are incorrectly depicted, following the step-by-step written instructions in the existing procedure and referring to the orientation of the parts removed would result in the correct installation and action of the elevator trim system.

What Are the Consequences if the Condition Is Not Corrected?

An incorrectly installed elevator trim system component, if not detected and corrected, could result in difficulties in controlling the airplane or a total loss of pitch control.

Is There Service Information That Applies to This Subject?

Raytheon has issued Safety Communiqué No. 234, dated September 2003, to address this issue.

What Are the Provisions of This Service Information?

The safety communiqué includes information about the incorrect depictions of the figures in the applicable maintenance manuals and also references the following temporary maintenance manual revisions:

—Temporary Revision No. 27–5 to the Model 1900/1900C Airliner Maintenance Manual: Revised ELEVATOR TRIM OPERATIONAL CHECK; and

—Temporary Revision No. 27–9 to the Model 1900D Airliner Maintenance Manual: Added MANUAL ELEVATOR TRIM OPERATIONAL CHECK.

FAA's Determination and Requirements of the AD

What Has FAA Decided?

We have evaluated all pertinent information and identified an unsafe condition that is likely to exist or develop on other products of this same type design.

Since the unsafe condition described previously is likely to exist or develop on other Raytheon Beech Models 1900, 1900C, and 1900D airplanes of the same type design, this AD is being issued to detect and correct any maintenance-induced problems with the elevator trim system installation before problems occur during operation. Such a condition could lead to difficulties in controlling the airplane or a total loss of pitch control.

What Does This AD Require?

This AD requires you to:

—Make a correction to the elevator trim system maintenance procedures;

—Incorporate a temporary revision to the applicable maintenance manual; and

—Incorporate procedures that will enhance the existing elevator trim operational check every time you have maintenance done on the elevator trim system.

How Does the Revision to 14 CFR Part 39 Affect This AD?

On July 10, 2002, we published a new version of 14 CFR part 39 (67 FR 47997, July 22, 2002), which governs FAA's AD system. This regulation now includes material that relates to altered products, special flight permits, and alternative methods of compliance. This material previously was included in each individual AD. Since this material is included in 14 CFR part 39, we will not include it in future AD actions.

Comments Invited

Will I Have the Opportunity To Comment Prior to the Issuance of the Rule?

This AD is a final rule that involves requirements affecting flight safety and was not preceded by notice and an opportunity for public comment; however, we invite you to submit any written relevant data, views, or arguments regarding this AD. Send your comments to an address listed under **ADDRESSES.** Include ''AD Docket No. 2003–CE–43–AD'' in the subject line of your comments. If you want us to acknowledge receipt of your mailed comments, send us a self-addressed, stamped postcard with the docket number written on it; we will date-stamp your postcard and mail it back to you. We specifically invite comments on the overall regulatory, economic, environmental, and energy aspects of the rule that might suggest a need to modify it. If a person contacts us through a nonwritten communication, and that contact relates to a substantive part of this AD, we will summarize the contact and place the summary in the docket. We will consider all comments received by the closing date and may amend the AD in light of those comments.

Regulatory Findings

Will This AD Impact Various Entities?

We have determined that this AD will not have federalism implications under Executive Order 13132. This AD will not have a substantial direct effect on the States, on the relationship between the national government and the States, or on the distribution of power and responsibilities among the various levels of government.

Will This AD Involve a Significant Rule or Regulatory Action?

For the reasons discussed above, I certify that this AD:

1. Is not a ''significant regulatory action'' under Executive Order 12866;

2. Is not a ''significant rule'' under the DOT Regulatory Policies and Procedures (44 FR 11034, February 26, 1979); and

3. Will not have a significant economic impact, positive or negative, on a substantial number of small entities under the criteria of the Regulatory Flexibility Act.

We prepared a summary of the costs to comply with this AD and placed it in the AD Docket. You may get a copy of this summary by sending a request to us at the address listed under **ADDRESSES.** Include ''AD Docket No. 2003–CE–43–AD'' in your request.

List of Subjects in 14 CFR Part 39

Air transportation, Aircraft, Aviation safety, Incorporation by reference, Safety.

Adoption of the Amendment

■ Accordingly, under the authority delegated to me by the Administrator, the Federal Aviation Administration amends part 39 of the Federal Aviation Regulations (14 CFR part 39) as follows:

PART 39—AIRWORTHINESS DIRECTIVES

■ 1. The authority citation for part 39 continues to read as follows:

Authority: 49 U.S.C. 106(g), 40113, 44701.

§ 39.13 [Amended]

■ 2. The FAA amends § 39.13 by adding the following new airworthiness directive (AD):

2003–20–10 Raytheon Aircraft Company: Amendment 39–13328; Docket No. 2003–CE–43–AD.

When Does This AD Become Effective?

(a) This AD becomes effective on October 15, 2003.

Are Any Other ADs Affected by This Action?

(b) None.

What Airplanes Are Affected by This AD?

(c) This AD affects Models Beech 1900, 1900C, and 1900D airplanes, all serial numbers, that are certificated in any category.

What Is the Unsafe Condition Presented in This AD?

(d) This AD is the result of an analysis of the maintenance procedures of the elevator trim system. We are issuing this AD to detect and correct any maintenance-induced problems with the elevator trim system installation before problems occur during operation. Such a condition could lead to difficulties in controlling the airplane or a total loss of pitch control.

What Must I Do To Address This Problem?

(e) To address this problem, you must accomplish the following:

Actions	Compliance	Procedures
(1) Using pen and ink, mark the applicable figure in the maintenance manual as referenced below. The depiction in the referenced figures is incorrect for the elevator trim drum only and depicts the cable drum at 180 degrees from the installed position and shows the open, keyed side of the drum instead of the flat side of the drum. Insert corrected figure (Figure 1 of this AD) into the applicable maintenance manual and identify it accordingly: (i) Figure 9 of Chapter 27–10–00 of the Model 1900/1900C Airliner Maintenance Manual (114–590021–7B) Clearly note in pen that existing portion of Figure 9 is correct for the aileron trim drum only and insert corrected figure (Figure 1 of this AD) marked in pen as correct for the elevator trim drum only; or	Before the next time you have maintenance done on the elevator trim system.	As specified in Raytheon Safety Communiqué No. 234, dated September 2003.

Actions	Compliance	Procedures
(ii) Mark out Figure 201 of Chapter 27–30–04 of the Model 1900D Airliner Maintenance Manual (125–590000–15). Insert corrected figure (Figure 1 of this AD)		
(2) Incorporate the applicable temporary revision into the maintenance manuals as follows: (i) Temporary Revision No. 27–5 to the Model 1900/1900C Airliner Maintenance Manual: Revised ELEVATOR TRIM OPERATIONAL CHECK; or (ii) Temporary Revision No. 27–9 to the Model 1900D Airliner Maintenance Manual: Added MANUAL ELEVATOR TRIM OPERATIONAL CHECK.	Before the next time you have maintenance done on the elevator trim system.	As specified in Raytheon Safety Communiqué No. 234, dated September 2003.
(3) Do the elevator trim operational check that is specified in the applicable maintenance manual and temporary revisions to the maintenance manual as referenced in paragraph (e)(2) of this AD	Prior to further flight after each time you have maintenance done on the elevator trim system.	As specified in Raytheon Safety Communiqué No. 234, dated September 2003: and Temporary Revision No. 27–5 to the Model 1900/1900C Airliner Maintenance Manual: Revised ELEVATOR TRIM OPERATIONAL CHECK; or Temporary Revision No. 27–9 to the Model 1900D Airliner Maintenance Manual: Added MANUAL ELEVATOR TRIM OPERATIONAL CHECK, both dated September 12, 2003, as applicable.

BILLING CODE 4910–13–P

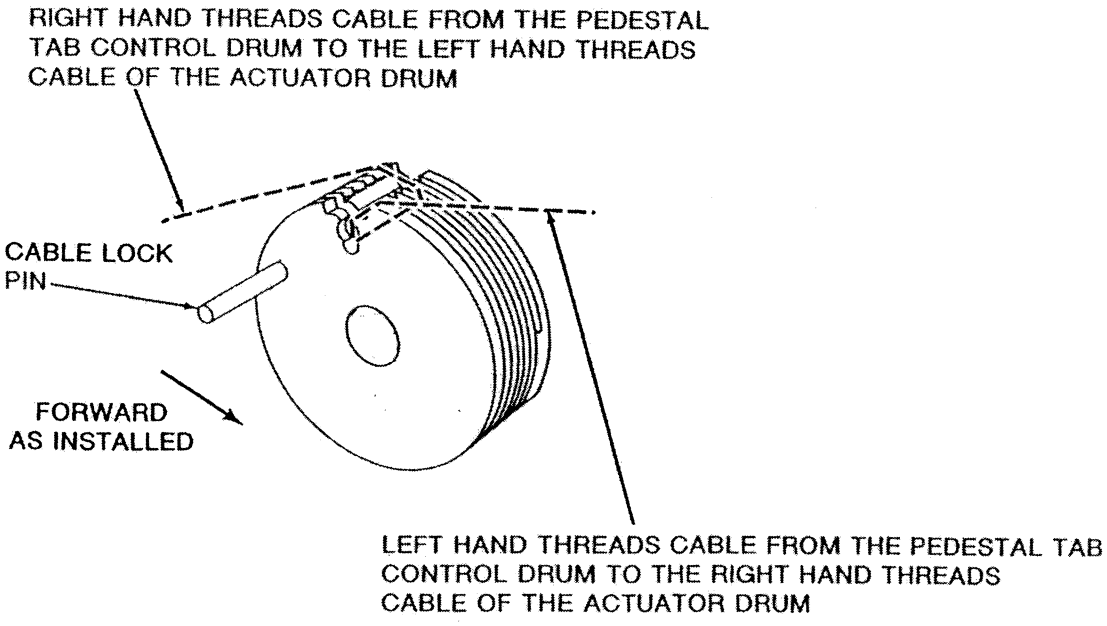

Figure 1

BILLING CODE 4910–13–C

What About Alternative Methods of Compliance?

(f) You may request a different method of compliance or a different compliance time for this AD by following the procedures in 14 CFR 39.13. Send your request to the Manager, Wichita Aircraft Certification Office (ACO), FAA. For information on any already approved alternative methods of compliance, contact Chris B. Morgan, Aerospace Engineer, FAA, Wichita Aircraft Certification Office, 1801 Airport Road, Room 100, Mid-Continent Airport, Wichita, Kansas 67209; telephone: (316) 946–4154; facsimile: (316) 946–4107.

Is There Material Incorporated by Reference?

(g) You must do the actions required by this AD per Raytheon Safety Communiqué No. 234, dated September 2003; and either Raytheon Temporary Revision No. 27–5 to the Model 1900/1900C Airliner Maintenance Manual: Revised ELEVATOR TRIM OPERATIONAL CHECK, or Raytheon Temporary Revision No. 27–9 to the Model 1900D Airliner Maintenance Manual: Added MANUAL ELEVATOR TRIM OPERATIONAL CHECK, both dated September 12, 2003. The Director of the Federal Register approved the incorporation by reference of this service bulletin in accordance with 5 U.S.C. 552(a) and 1 CFR part 51. Raytheon Aircraft Company, 9709 E. Central, Wichita, Kansas 67201–0085; telephone: (800) 429–5372 or (316) 676–3140. You may review copies at FAA, Central Region, Office of the Regional Counsel, 901 Locust, Room 506, Kansas City, Missouri 64106; or at the Office of the Federal Register, 800 North Capitol Street, NW., suite 700, Washington, DC.

Issued in Kansas City, Missouri, on October 2, 2003.

Dorenda D. Baker,

Acting Manager, Small Airplane Directorate, Aircraft Certification Service.

[FR Doc. 03–25591 Filed 10–9–03; 8:45 am]

BILLING CODE 4910–13–P

DEPARTMENT OF TRANSPORTATION

Federal Aviation Administration

14 CFR Part 39

[Docket No. 2003–SW–08–AD; Amendment 39–13329; AD 2003–20–11]

RIN 2120–AA64

Airworthiness Directives; Eurocopter Deutschland GmbH Model EC135 P1, P2, T1, and T2 Helicopters

AGENCY: Federal Aviation Administration, DOT.

ACTION: Final rule.

SUMMARY: This amendment supersedes an existing airworthiness directive (AD) for Eurocopter Deutschland GmbH (ECD) Model EC135 P1 and EC135 T1 helicopters. That AD currently requires adding the AD or a statement to the Rotorcraft Flight Manual (RFM) informing the pilot to reduce power and land as soon as practicable if a thump-like sound followed by unusual vibration occurs during flight. That AD also requires visually inspecting the main rotor drive torque strut assembly (strut) for a crack or a break, recording the inspections in the historical or equivalent record, and re-marking and relocating the strut, as appropriate, and replacing any unairworthy strut with an airworthy strut. Also, that AD establishes life limits for certain struts and revises the life limit for other struts. This amendment retains the same requirements but adds the ECD Model EC135 P2 and EC135 T2 helicopters to the applicability and requires replacing certain life-limited struts with titanium struts. This amendment is prompted by the manufacture of a titanium strut that provides a permanent correction to the unsafe condition that led to limiting the life of other struts that have failed. The actions specified by this AD are intended to prevent failure of a strut and subsequent loss of control of the helicopter.

DATES: Effective November 14, 2003.

The incorporation by reference of certain publications listed in the regulations is approved by the Director of the Federal Register as of November 14, 2003.

ADDRESSES: The service information referenced in this AD may be obtained from American Eurocopter Corporation, 2701 Forum Drive, Grand Prairie, Texas 75053–4005, telephone (972) 641–3460, fax (972) 641–3527. This information may be examined at the FAA, Office of the Regional Counsel, Southwest Region, 2601 Meacham Blvd., Room 663, Fort Worth, Texas; or at the Office of the Federal Register, 800 North Capitol Street, NW., suite 700, Washington, DC.

FOR FURTHER INFORMATION CONTACT: Richard Monschke, Aviation Safety Engineer, FAA, Rotorcraft Directorate, Rotorcraft Standards Staff, Fort Worth, Texas 76193–0110, telephone (817) 222–5116, fax (817) 222–5961.

SUPPLEMENTARY INFORMATION: A proposal to amend 14 CFR part 39 by superseding AD 2001–18–13, Amendment 39–12439 (66 FR 47878, September 14, 2001), for the specified model helicopters was published in the **Federal Register** on June 5, 2003 (68 FR 33663). The action proposed retaining the requirements to add the AD or a statement to the Rotorcraft Flight Manual (RFM) informing the pilot to reduce power and land as soon as practicable if a thump-like sound followed by unusual vibration occurs during flight. Also, the action proposed retaining the requirements to visually inspect each strut for a crack or a break; to record the inspections in the historical or equivalent record; to re-mark and relocate the strut, as appropriate; to replace any unairworthy strut with an airworthy strut; and to establish or revise life limits for certain struts. In addition to the requirements in the current AD, that action proposed adding the ECD Model EC135 P2 and EC135 T2 helicopters to the applicability and replacing certain life-limited struts with titanium struts.

The Luftfahrt-Bundesamt (LBA), the airworthiness authority for the Federal Republic of Germany, advises that struts, (P/N) L633M1001 103 and L633M1001 105, should not be used beyond December 31, 2004. The LBA advises replacing those struts with torque struts, P/N L633M1001 104, after January 1, 2005.

ECD has issued Alert Service Bulletin EC135–63A–002, Revision 2, dated June 26, 2002 (ASB), which specifies inspecting for a crack, marking strut locations and serial numbers, and transferring the location side of the torque struts or replacing each strut, P/N L633M1001 103 or L633M10001 105, with a torque strut, P/N L633M1001 104, that is anodized and not coated with paint, which have no life limit. The LBA classified this ASB as mandatory and issued AD No. 2001–107/2, dated September 19, 2002, to ensure the continued airworthiness of these helicopters in the Federal Republic of Germany.

Interested persons have been afforded an opportunity to participate in the making of this amendment. No comments were received on the proposal or the FAA's determination of the cost to the public. The FAA has determined that air safety and the public interest require the adoption of the rule as proposed.

On July 10, 2002, the FAA issued a new version of 14 CFR part 39 (67 FR 47997, July 22, 2002), which governs FAA's AD system. This regulation now includes material that relates to special flight permits, alternative methods of compliance, and altered products. This material previously was included in each individual AD. Since this material is included in 14 CFR part 39, we have not included it in this AD action.

The FAA estimates that this AD will affect 50 helicopters of U.S. registry. The AD will take approximately ½ work hour for the flashlight and mirror inspection; 2.5 work hours to remark, relocate, and inspect with a magnifying glass; and 1 hour to replace both struts.

The average labor rate is $60 per work hour. Required parts will cost approximately $9,696 per helicopter. Based on these figures, we estimate the total cost impact of the proposed AD on U.S. operators to be $496,800.

The regulations adopted herein will not have a substantial direct effect on the States, on the relationship between the national Government and the States, or on the distribution of power and responsibilities among the various levels of government. Therefore, it is determined that this final rule does not have federalism implications under Executive Order 13132.

For the reasons discussed above, I certify that this action (1) is not a ''significant regulatory action'' under Executive Order 12866; (2) is not a ''significant rule'' under DOT Regulatory Policies and Procedures (44 FR 11034, February 26, 1979); and (3) will not have a significant economic impact, positive or negative, on a substantial number of small entities under the criteria of the Regulatory Flexibility Act. A final evaluation has been prepared for this action and it is contained in the Rules Docket. A copy of it may be obtained from the Rules Docket at the location provided under the caption **ADDRESSES.**

List of Subjects in 14 CFR Part 39

Air transportation, Aircraft, Aviation safety, Incorporation by reference, Safety.

Adoption of the Amendment

■ Accordingly, pursuant to the authority delegated to me by the Administrator, the Federal Aviation Administration amends part 39 of the Federal Aviation Regulations (14 CFR part 39) as follows:

PART 39—AIRWORTHINESS DIRECTIVES

■ 1. The authority citation for part 39 continues to read as follows:

Authority: 49 U.S.C. 106(g), 40113, 44701.

§ 39.13 [Amended]

■ 2. Section 39.13 is amended by removing Amendment 39–12439 (66 FR 47878, September 14, 2001), and by adding a new airworthiness directive (AD), Amendment 39–13329 to read as follows:

2003–20–11 Eurocopter Deutschland GmbH: Amendment 39–13329, Docket No. 2003–SW–08–AD. Supersedes AD 2001–18–13, Amendment 39–12439, Docket No. 2001-SW–19-AD.

Applicability: Model EC135 P1, P2, T1, and T2 helicopters, with main rotor drive torque strut assembly (strut), part number (P/N) L633M1001 103 or L633M1001 105, installed, certificated in any category.

Compliance: Required as indicated, unless accomplished previously.

To prevent failure of the strut and subsequent loss of control of the helicopter, accomplish the following:

(a) Before further flight, insert a copy of this AD or a statement into the Emergency Procedures Section of the Rotorcraft Flight Manual (RFM) to inform the pilot to reduce power and land as soon as practicable if a thump-like sound followed by unusual vibration occurs during flight.

(b) Within 10 hours time-in-service (TIS), visually inspect each strut with 950 or more hours TIS for a crack or a break using a flashlight and a mirror in accordance with the Accomplishment Instructions, paragraph 3.B.(1) and 3.B.(2), of Eurocopter Alert Service Bulletin EC135–63A–002, Revision 2, dated June 26, 2002 (ASB). Replace any cracked or broken strut with an airworthy strut before further flight.

(c) Inspect the following struts for a crack or a break, using a 6-power or higher magnifying glass, and re-mark and relocate each strut in accordance with the Accomplishment Instructions, paragraph 3.C., of the ASB. This AD does not require you to return any part to the manufacturer.

(1) For a strut with less than 950 hours TIS, inspect before accumulating 1000 hours TIS.

(2) For a strut with 950 or more hours TIS, inspect within 50 hours TIS.

(3) Replace any cracked or broken strut with an airworthy strut before further flight.

(d) This AD revises the Airworthiness Limitations section of the maintenance manual by establishing a life limit of 1000 hours TIS for each strut, P/N L633M1001 103 and L633M1001 105, in its original location, with an additional 1000 hours TIS if properly re-marked and relocated (2000 hours total TIS) in accordance with the Accomplishment Instructions, paragraph 3.C.(3) of the ASB.

(e) Record details of the inspections in the historical or equivalent records in accordance with the Accomplishment Instructions, paragraph 3.C.(4) of the ASB.

(f) When a strut, P/N L633M1001 103 or L633M1001 105, reaches its life limit, replace it with a titanium strut, P/N L633M1001 104, which must be used in pairs, one strut on each side of the transmission. The titanium struts have no life limit. After installing a strut, P/N L633M1001 104, adjust the weight and balance by using the weight and moment stated in the Planning Information, paragraph 1.H., of the ASB.

(g) On or before December 31, 2004, replace each strut, P/N L633M1001 103 or L633M1001 105, with a strut, P/N L633M1001 104.

(h) Replacing struts, P/N L633M1001 103 and L633M1001 105, with titanium struts, P/N L633M1001 104, constitutes terminating action for the requirements of this AD.

(i) To request a different method of compliance or a different compliance time for this AD, follow the procedures in 14 CFR 39.19. Contact the Safety Management Group for information about previously approved alternative methods of compliance.

(j) The inspections and replacement of the struts shall be done in accordance with Eurocopter Deutschland (GmbH) Alert Service Bulletin EC135–63A–002, Revision 2, dated June 26, 2002. The Director of the Federal Register approved the incorporation by reference in accordance with 5 U.S.C. 552(a) and 1 CFR part 51. Copies may be obtained from American Eurocopter Corporation, 2701 Forum Drive, Grand Prairie, Texas 75053–4005, telephone (972) 641–3460, fax (972) 641–3527. Copies may be inspected at the FAA, Office of the Regional Counsel, Southwest Region, 2601 Meacham Blvd., Room 663, Fort Worth, Texas; or at the Office of the Federal Register, 800 North Capitol Street, NW., suite 700, Washington, DC.

Note: The subject of this AD is addressed in Luftfahrt-Bundesamt (Federal Republic of Germany) AD 2001–107/2, dated September 19, 2002.

Issued in Fort Worth, Texas, on September 29, 2003.

David A. Downey,

Manager, Rotorcraft Directorate, , Aircraft Certification Service.

[FR Doc. 03–25592 Filed 10–9–03; 8:45 am]

BILLING CODE 4910–13–P

DEPARTMENT OF TRANSPORTATION

Federal Aviation Administration

14 CFR Part 71

[Docket No. FAA–2003–15718; Airspace Docket No. 03–ACE–60]

Modification of Class E Airspace; Wayne, NE

AGENCY: Federal Aviation Administration, DOT.

ACTION: Direct final rule; confirmation of effective date.

SUMMARY: This document confirms the effective date of the direct final rule which revises Class E airspace at Wayne, NE.

EFFECTIVE DATE: 0901 UTC, December 25, 2003.

FOR FURTHER INFORMATION CONTACT: Brenda Mumper, Air Traffic Division, Airspace Branch, ACE–520A DOT Regional Headquarters Building, Federal Aviation Administration, 901 Locust, Kansas City, MO 64106; telephone: (816) 329–2524.

SUPPLEMENTARY INFORMATION: The FAA published this direct final rule with a request for comments in the **Federal Register** on August 18, 2003 (68 FR 49349). The FAA uses the direct final rulemaking procedure for a non-controversial rule where the FAA believes that there will be no adverse public comment. This direct final rule advised the public that no adverse comments were anticipated, and that unless a written adverse comment, or a

written notice of intent to submit such an adverse comment, were received within the comment period, the regulation would become effective on December 25, 2003. No adverse comments were received, and thus this notice confirms that this direct final rule will become effective on that date.

Issued in Kansas City, MO, on September 25, 2003.

Paul J. Sheridan,

Acting Manager, Air Traffic Division, Central Region.

[FR Doc. 03–25748 Filed 10–9–03; 8:45 am]

BILLING CODE 4910–13–M

COMMODITY FUTURES TRADING COMMISSION

17 CFR Part 30

Foreign Futures and Options Transactions

AGENCY: Commodity Futures Trading Commission.

ACTION: Order.

SUMMARY: By this Order, the Commodity Futures Trading Commission (''Commission'') is consolidating and updating the relief set forth in prior orders issued pursuant to Commission Rule 30.10 regarding the offer and sale of foreign futures and options contracts to customers located in the U.S. by firms located in the U.K. to reflect the substitution of the Financial Services Authority for various U.K. regulatory and self-regulatory organizations.

EFFECTIVE DATE: October 10, 2003.

FOR FURTHER INFORMATION CONTACT: Lawrence B. Patent, Esq., Deputy Director, or Andrew V. Chapin, Esq., Special Counsel, Compliance and Registration Section, Division of Clearing and Intermediary Oversight, Commodity Futures Trading Commission, 1155 21st Street, NW., Washington, DC, 20581. Telephone: (202) 418–5430. E-mail: *lpatent@cftc.gov* or *achapin@cftc.gov*, respectively.

SUPPLEMENTARY INFORMATION: The Commission has issued the following Order:

Order Substituting the Financial Services Authority as the Sole Regulatory Authority in the United Kingdom in Prior Commission Orders and Amending Certain Terms and Conditions

Existing Rule 30.10 Relief

In 1989, the Commission issued a series of orders pursuant to Rule 30.10 authorizing certain firms located in the U.K. to conduct brokerage activities for U.S. customers on certain non-U.S. exchanges without having to register with the Commission as a futures commission merchant or otherwise comply with certain other requirements set forth in Parts 1 and 30 of the Commission's rules.[1] The Orders were issued to the Securities Investment Board (''SIB''), the Investment Management Regulatory Organisation (''IMRO''), the Association of Futures Brokers and Dealers (''AFBD''), and The Securities Association (''TSA'').[2] The U.K. Rule 30.10 Orders applied to brokerage activities on or subject to the rules of Recognized Investment Exchanges (''RIES'') in the U.K. or any non-U.S. exchange designated by the SIB as an investment exchange (referred to as Designated Investment Exchanges or ''DIEs'') undertaken by firms authorized to conduct investment business in the U.K. from a location in the U.K.

Since 1989, the Commission has amended and supplemented the U.K. 30.10 Orders to reflect changes in the U.K. regulatory structure, clarify the terms and conditions set forth therein, and provide related relief. First, effective April 1, 1991, the TSA and AFBD merged to form the SFA. Accordingly, the Commission issued an order acknowledging the substitution of SFA as a party to several ongoing information sharing and financial intermediary recognition arrangements entered into with the AFBD, TSA and SIB pursuant to Part 30 of the Commissions' rules.[3] In particular, the Commission acknowledged that all confirmations of Rule 30.10 relief previously extended to AFBD and TSA firms remained effective with respect to such firms in their capacity as members of SFA.[4]

Second, in 1992, the Commission issued an order commonly referred to as the Limited Marketing Order.[5] The Limited Marketing Order permits firms that have received confirmation of Rule 30.10 relief, without prior notice to the Commission, to engage in limited marketing conduct with respect to foreign futures or option contracts within the U.S. through their employees or other representatives, subject to the terms and conditions set forth therein. As part of the Limited Marketing Order, the Commission confirmed that the relief set forth therein applied to those firms having received confirmation of relief under the Rule 30.10 orders issued to the SIB, SFA and IMRO.

Third, in 1997, the Commission clarified the procedures set forth in prior Rule 30.10 Orders applicable to the treatment of customer funds for transactions occurring on or subject to the rules of a board of trade located outside the jurisdiction of the recipient of the Rule 30.10 Order. In doing so, the Commission interpreted prior Rule 30.10 Orders to require firms having received confirmation of Rule 30.10 relief to comply with requirements consistent with the secured amount requirement applicable to futures commission merchants as set forth in Rule 30.7.[6] Specifically, the Commission interpreted Rule 30.7 to require each FCM and Rule 30.10 firm to: (a) obtain and retain in its files an acknowledgment from the depository maintaining customer funds or property that the depositor was informed that such money or property was held on behalf of foreign futures and foreign options customer funds in accordance with Rule 30.7; and (b) take appropriate action (*i.e.*, set aside funds in a ''mirror'' account) in the event that it became aware that foreign futures and foreign options customer funds were not being held in the appropriate manner. With respect to the U.K., the Commission clarified the procedures with which SFA and IMRO members should comply

[1] Commission rules referred to herein are found at 17 CFR Ch. I (2003). Rule 30.10 permits a person affected by the requirements contained in Part 30 of the Commission's rules to petition the Commission for an exemption from such requirements. Appendix A to the Part 30 rules provides an interpretative statement that clarifies that a foreign regulator or self-regulatory organization (''SRO'') can petition the Commission under Rule 30.10 for an order to permit regulatees or members to conduct business from locations outside the U.S. for U.S. persons on non-U.S. exchanges without registering as a futures commission merchant under the Commodity Exchange Act (''Act''), based upon the person's substituted compliance with a foreign regulatory structure found comparable to that administered by the Commission under the Act.

[2] 54 FR 21599 (May 9, 1989) (SIB); 54 FR 21604 (May 19, 1989) (AFBD); 54 FR 21609 (May 19, 1989) (TSA); 54 FR 21614 (May 19, 1989) (IMRO) (along with the SFA Order, collectively, the ''U.K. Rule 30.10 Orders'').

[3] 56 FR 14017 (April 5, 1991).

[4] *Id.* at 14018.

[5] 57 FR 49644 (November 3, 1992). In 1994, the Commission expanded the category of persons to whom qualified firms may direct limited marketing conduct. 59 FR 42156 (August 17, 1994).

[6] Rule 30.7 requires FCMs who accept money, securities or property from foreign futures and foreign options customers to maintain in a separate account or accounts, such money, securities or property in an amount at least sufficient to cover or satisfy all of its current obligations to those customers. The separate account or accounts must be maintained under an account name that clearly identifies the funds as belonging to foreign futures and foreign options customers at a depository that meets the requirements of Rule 30.7(c).

when dealing on behalf of U.S. customers on a DIE.[7]

Fourth, in 2000, the Commission further clarified the procedures applicable to the treatment of customer funds by FCMs and Rule 30.10 firms. In new Appendix B to Part 30[8] and an order amending prior Rule 30.10 orders,[9] the Commission revised its prior interpretation of the Rule 30.7 secured amount requirement. In particular, the Commission stated that, subject to an additional disclosure requirement, the Rule 30.7 acknowledgment only applies to the maintenance of the account or accounts containing foreign futures and foreign options customer funds by the initial depository, and not to the manner in which any subsequent depository holds or subsequently transmits those funds. Only if an FCM or Rule 30.10 firm fails to receive the required acknowledgment from the initial depository or provide the necessary disclosure statement, must it then set aside funds with an acceptable depository and receive from such depository the required acknowledgment. With respect to the U.K., the Commission clarified the procedures with which SFA and IMRO members should comply when dealing on behalf of U.S. customers on a DIE.[10]

Information Sharing

Prior to the issuance of the U.K. Rule 30.10 Orders, the Commission entered into the Financial Information Sharing Memorandum of Understanding (''FISMOU'') with, among others, SIB, AFBD, TSA and IMRO.[11] In order to facilitate the exchange of information related to the U.K. Rule 30.10 Orders, the Commission subsequently entered into the ''Addendum dated May 15, 1989 to Financial Information Sharing Memorandum of Understanding'' (''Addendum'') with, among others, SIB, AFBD, TSA and IMRO.[12] The Commission and SIB also exchanged letters, referred to as the Side Letter and the Note to the Side Letter, regarding the continued application of a separate information sharing arrangement between U.S. and U.K. regulators entered into originally in 1986.[13]

Recent Changes to the U.K. Regulatory Structure

On December 1, 2001, pursuant to the Financial Services and Markets Act 2000 (''2000 Act''), the Financial Services Authority (''FSA''), as the successor organization to SIB,[14] assumed its role as the single U.K. regulator directly responsible for the regulation of investment business, including the offer and sale of commodity futures and options. Prior to the enactment of the 2000 Act, the responsibility for supervising commodity futures markets and intermediaries rested with FSA and certain SROs, including the SFA and IMRO. Pursuant to the 1986 Financial Services Act (''FSAct''), FSA regulated the U.K. financial markets and established general standards for investor protection. The SROs conferred the status of authorization for intermediaries and promulgated general fitness standards, financial requirements, sales practice rules and rules designed to ensure the integrity of the market. With the enactment of the 2000 Act, the responsibility for each of these tasks has been assumed by FSA as the single supervisory authority, the U.K. SROs have been wound up, and the members of these now-defunct organizations are deemed to have been authorized by FSA. In addition, the FSA Handbook replaces all prior rules and regulations regarding firm conduct and operations. In light of its new regulatory role, FSA has requested that the Commission amend the U.K. 30.10 Orders to reflect this change in regulatory oversight.

Recent Changes Under the Commodity Futures Modernization Act

The Commission notes that the Commodity Futures Modernization Act[15] amended the Act to provide the Commission greater regulatory flexibility to streamline and eliminate unnecessary regulation for the entities regulated under the Act. With this in mind, Commission staff has reviewed the Commission Orders issued pursuant to Rule 30.10. As part of this review, Commission staff has discussed with each Rule 30.10 Order recipient how best to update, if necessary, the information contained in the Order, whether some or all of the terms and conditions of the order continue to be necessary, and whether new conditions may be required based upon developments in the relevant jurisdiction.

In response to Commission staff's discussion with it, FSA has requested further that the Commission amend certain terms and conditions set forth within the U.K. Rule 30.10 Orders.[16] Specifically, FSA requested the following changes:

1. *Risk Disclosure.* Subsequent to the Commission issuing the U.K. Rule 30.10 Orders, it adopted Appendix A to Rule 1.55(c).[17] In doing so, the Commission noted that the generic risk disclosure statement set forth in Appendix A may be used in lieu of the statements required by Commission Rules 1.55, Rule 33.7 and the special bankruptcy disclosures of Commission Rule 190.1(c).[18] The Commission determined further that all firms operating pursuant to confirmed Rule 30.10 relief may elect to use the generic risk disclosure statement or the risk disclosure statements mandated by Commission Rules 1.55 and 33.7 and applicable Commission orders, as appropriate.[19] FSA has provided DCIO with the written disclosures required to be provided to prospective customers pursuant to FSA conduct of business rules and DCIO has determined that such disclosures track the language set forth in the generic risk disclosure statement. Accordingly, FSA requested that the Commission exempt firms designated by FSA from compliance with the Commission's risk disclosure requirements as they apply to transactions under Part 30.

2. *Segregation of Customer Funds.* At the time that the Commission issued the U.K. Rule 30.10 Orders, U.S. customers were not permitted to opt out of segregation. Accordingly, each U.K. firm receiving

[7] 62 FR 10447 (March 7, 1997) (SFA); 62 FR 10449 (March 7, 1997) (IMRO).

[8] 65 FR 60558 (October 11, 2000).

[9] 65 FR 60560 (October 11, 2000) (referred to herein as the ''Supplemental Client Money Order'').

[10] 65 FR at 60563–64.

[11] Dated September 1, 1988.

[12] *See, e.g.,* 54 FR 21604, 21607–08.

[13] *See, e.g.,* 54 FR 21604, 21608. The Side Letter and Note to the Side Letter referred to the 1986 Memorandum of Understanding Between the United States Securities and Exchange Commission and the United Kingdom Department of Trade and Industry in Matters Relating to Securities and between the United States Commodity Futures Trading Commission and the United Kingdom Department of Trade and Industry in Matters Relating to Futures (dated September 23, 1986), as supplemented by the Memorandum Relating to US/UK MOU (dated November 22, 1988), and superseded by the Memorandum of Understanding on Mutual Assistance and the Exchange of Information Between United States Securities and Exchange Commission and Commodity Futures Trading Commission and the United Kingdom Department of Trade and Industry and the Securities and Investment Board (dated September 25, 1991) (collectively, the ''US/UK MOU''). After the 1991 update to the US/UK MOU, the SIB and CFTC exchanged letters confirming the continued applicability of the Side Letter and the Note to the Side Letter. *See* Letters exchanged by Wendy L. Gramm, Chairman, Commission, and Sir David Walker, Chairman, SIB, dated September 25, 1991.

[14] In 1977, SIB's name was formally changed to FSA as a first step to unite banking supervision and investment services regulation under one body. In 1998, banking supervision was transferred to FSA from the Bank of England.

[15] Pub. L. 106–554, 114 Stat. 2763 (December 21, 2000).

[16] *See* Letter from Michael Folger, Director of Conduct of Business Standards, FSA, to Jane Kang Thorpe, Director for the Division of Clearing and Intermediary Oversight, dated July 24, 2003 (''July 24 Letter''). As part of its policy to promote more transparency to the activities of the Commission and to permit affected parties to voice their support or concerns, the July 24 Letter was posted on the Commission's Web site and interested parties were provided a two-week period to submit any comments. No comments were received.

[17] 59 FR 34376 (July 5, 1994).

[18] *Id.* 34378.

[19] *Id.* 34379.

confirmation of relief was required to consent to refuse U.S. customers the option of not segregating funds notwithstanding relevant provisions of the U.K. regulatory system.[20] The Act recently was amended, however, to permit intermediaries conducting business on a derivatives transaction execution facility (''DTEF'') to offer any customer that is an eligible contract participant (''ECP'') the right to opt out of segregation for any transactions entered into on the DTEF. Pursuant to this authority, the Commission adopted Rule 1.68, which permits a DTEF to adopt rules allowing futures commission merchants (''FCMs'') to offer certain sophisticated customers the right to elect not to have funds, that are being carried by the FCM for purposes of margining, guaranteeing, or securing the customers' trades on or through a DTEF, separately accounted for and segregated.[21] Given that the bulk of foreign futures and options activity undertaken by U.S. persons is conducted by sophisticated customers, FSA requested that the Commission authorize U.K. firms to permit U.S. customers that are ECPs to opt out of segregation with respect to those foreign futures and options transactions entered into pursuant to the revised Order.

3. *Bank Undertakings.* Currently, each U.K. firm using an approved bank undertaking to meet any part of its financial resources requirement is subject to a notification requirement should the value of customer funds segregated on behalf of U.S. customers exceed a specified multiple of the firm's minimum financial requirement. If such an event were to occur, the firm consents to notify FSA on its quarterly financial statement to FSA, or at such other times as may be specified by FSA, the value of funds required to be segregated on behalf of U.S. customers. This notification requirement was designed to take into account the impact of bank undertakings in the context of the Commission's minimum financial resource requirement for futures commission merchants (*i.e.*, four percent of segregated funds). FSA has represented that the European Union's Capital Adequacy Directive forbids certain regulated financial institutions, including firms authorized by FSA to conduct futures business and hold customer funds, from using bank undertakings. Accordingly, FSA requested that the Commission eliminate the notification requirement for firms using an approved bank undertaking.

4. *Regulated Markets.* Currently, the scope of the U.K. Rule 30.10 Orders is limited to foreign futures and options traded on a Recognized Investment Exchange (''RIE'') or a Designated Investment Exchange (''DIE''). As part of the European Union's (''E.U.'s'') attempt to create a single marketplace among all member states, the Investment Services Directive applicable to all E.U. members created a category of markets known as a Regulated Market. A Regulated Market is an exchange organized and operating from within one of the E.U. member states that has been recognized by the E.U. as meeting certain standards for financial integrity and customer protection. With the exception of the London Metal Exchange, the International Petroleum Exchange and EDX London, all U.K. exchanges that are RIEs are now also Regulated Markets within the meaning of the Investment Services Directive. Non-U.K. Regulated Markets have been progressively removed from the category of DIEs because they are exempt from the requirement to be authorized in order to conduct investment business in the U.K. The DIE classification presently includes only non-U.K., non-E.U. markets recognized by FSA. Accordingly, FSA has requested that the Commission expand the scope of the revised Order to include transactions executed on or subject to the rules of RIEs, DIEs, and Regulated Markets, subject to the existing limitation that an exempt firm may not intermediate transactions on behalf of U.S. customers on U.S. exchanges.

Upon consideration of the foregoing, the Commission has determined to consolidate and amend the Orders into a single Order restating the terms and conditions for relief as requested by FSA. Accordingly, the Commission hereby:

(1) Acknowledges that:

(a) Pursuant to the Financial Services and Markets Act 2000, FSA has succeeded the SIB, SFA and IMRO as the relevant U.K. regulatory organization for the supervision of commodity futures and options transactions conducted within the U.K.;

(b) Firms authorized under the Financial Services act 1986 are now authorized to carry on designated investment business under the Financial Services and Markets Act 2000;

(c) Provisions made under the Financial Services Act of 1986 have been replaced by generally equivalent provisions of the FSA Handbook for rules and guidance under the Financial Services and Markets Act 2000;

(d) All confirmations of Rule 30.10 relief previously extended and then in effect by Commission staff or the National Futures Association (''NFA'')[22] to SIB, SFA and IMRO firms remain effective with respect to such firms in their capacity as new regulatees of FSA;

(e) The Financial Information Sharing Memorandum of Understanding and related information-sharing arrangements remain applicable, and that firms authorized to carry on designated investment business by FSA shall be entitled to all of the benefits, subject to the remaining parties' performance of their respective responsibilities, including compliance with the Side Letter and Note to the Side Letter; and

(f) The relief set forth previously in the Limited Marketing Orders and the Supplemental Client Money Order remains effective with respect to each firm that has received confirmation of Rule 30.10 relief pursuant to this Order; and

(2) Confirms that the relief granted pursuant to this Order extends to brokerage activities conducted on or subject to the rules of an RIE, DIE or Regulated Market, but does not extend to rules or regulations relating to trading, directly or indirectly, on U.S. contract markets or derivatives transaction execution facilities; and

(3) Revokes the relief set forth in Orders dated May 19, 1989 and April 5, 1991, issued previously to the now-defunct SIB (54 FR 21599), IMRO (54 FR 21614), and SFA (56 FR 14017).

In connection with the Rule 30.10 relief previously granted to the U.K. regulatory and self-regulatory organizations, Commission staff has issued certain no-action letters regarding the treatment of customer funds attributable to trading on the LME.[23] In light of the changes to the U.K. regulatory program, the Commission believes that it is appropriate to amend these letters by substituting all prior references to AFBD and SFA with FSA.

Based upon the Commission's prior determination to issue relief under Rule 30.10, the information provided to the Commission by FSA describing the recent changes to the U.K. regulatory framework, and the recommendation of Commission staff, the Commission has concluded that the standards for relief set forth in Rule 30.10 and, in particular, Appendix A thereof, generally have been satisfied and that compliance with applicable U.K. law and FSA rules may be substituted for compliance with those sections of the Act and rules thereunder more particularly set forth herein.

By this Order, the Commission hereby exempts, subject to specified conditions, those firms identified to the Commission by FSA as eligible for the relief granted herein from:

—Registration with the Commission for firms and for firm representatives;
—The separate account requirements contained in Commission Rule 30.7, 17 CFR 30.7;
—The requirement in Commission Rule 30.6(a) and (d), 17 CFR 30.6(a) and

[20] The Part 30 Orders mandated compliance with Rule 30.7's secured amount requirement or foreign equivalent. The secured amount requirement set forth in Rule 30.7, and described more fully in Appendix B to Part 30, is similar to the segregation requirement set forth in Section 4d of the Act and rules promulgated thereunder.

[21] 66 FR 20740 (April 25, 2001). At the time of the rulemaking, the Commission determined to defer its decision whether to extend the choice to opt out of segregation to ECPs trading on designated contract markets, but noted that it may reconsider the issue in the future. *Id.* at 20743.

[22] *See infra* n.37.

[23] *See* Letter from Andrea Corcoran, Director, Division of Trading and Markets, to the Hon. Christopher J. Sharples, Chairman, AFBD, dated October 10, 1989; Letter from Andrea Corcoran, Director, Division, to A.R.G. Frase, AFBD, dated June 19, 1990; Letter from Andrea Corcoran, Director, Division of Trading and Markets, to Phillip Thorpe, Chief Executive, AFBD, and Chief Designate, SFA, dated April 1, 1991; Letter from John C. Lawton, Acting Director, Division of Trading and Markets, to Alan Whiting, Executive Director for Regulation and Compliance, LME, dated April 3, 2000.

(d), that firms provide customers located in the U.S. with the risk disclosure statements in Commission Rule 1.55(b), 17 CFR 1.55(b) and Commission Rule 33.7, 17 CFR 33.7, or as otherwise approved under Commission Rule 1.55(c), 17 CFR 1.55(c);

—Those sections of Part 1 of the Commission's financial rules that apply to foreign futures and options sold in the U.S. as set forth in Part 30; and

—Those sections of Part 1 of the Commission's rules relating to books and records which apply to transactions subject to Part 30,

based upon substituted compliance by such persons with the applicable statutes and regulations in effect in the U.K.

This determination to permit substituted compliance is based on, among other things, the Commission's finding that the regulatory scheme governing persons in U.K. who would be exempted hereunder provides:

(1) A system of qualification or authorization of firms who deal in transactions subject top regulation under Part 30 that includes, for example, criteria and procedures for granting, monitoring, suspending and revoking licenses, and provisions for requiring and obtaining access to information about authorized firms and persons who act on behalf of such firms.

(2) Financial requirements for firms including, without limitation, a requirement that all firms immediately notify FSA if the firms' adjusted net capital falls below a specified level and daily mark-to-market settlement and/or accounting procedures;

(3) A system for the protection of assets of appropriate customers that is designed to preclude the use of such customer assets to satisfy house obligations and requires separate accounting for such assets, augmented by a compensation scheme designed to compensate customers whose assets are segregated and who have suffered a loss as a result of fraud and/or insolvency of a firm;

(4) Recordkeeping and reporting requirements pertaining to financial and trade information including, without limitation, order tickets, trade confirmations, monthly customer account statements, customers' segregation records, accounting records for customer and proprietary trades and discretionary account documentation;

(5) Sales practice standards for firms and persons acting on their behalf that include, for example, a requirement that authorized persons know their customers, required disclosures to prospective customers and prohibitions on misleading advertising and improper trading activities;

(6) Procedures to audit for compliance with, and to redress violations of, customer protection and sales practice requirements including, without limitation, an affirmative surveillance program designed to detect trading activities that take advantage of customers, and the existence of broad powers of investigation relating to sales practice abuses; and

(7) Mechanisms for sharing of information between the Commission and FSA and the availability of related mechanisms for sharing monitoring information with the Commission on an ''as needed'' basis including, without limitation, confirmation data, data necessary to trace funds related to trading futures products subject to regulation in U.K., position data, data on firms' standing to do business and financial condition, and for cooperating with the Commission and NFA in inquiries, compliance matters, investigations and enforcement proceedings.

This Order does not provide an exemption from any provision of the Act or rules thereunder not specified herein, for example, without limitation, the antifraud provision in Rule 30.9. Moreover, the relief granted is limited to brokerage activities undertaken on behalf of customers located in the U.S. with respect to transactions on or subject to the rules of an RIE, DIE, or a regulated Market for products that customers located in the U.S. may trade.[24] The relief does not extend to rules relating to trading, directly or indirectly, on U.S. exchanges. For example, a firm trading in U.S. markets for its own account would be subject to the Commission's large trader reporting requirements.[25] Similarly, if such a firm were carrying a position on a U.S. exchange on behalf of foreign clients, it would be subject to the reporting requirements applicable to foreign brokers.[26] The relief herein is inapplicable where the firm solicits or accepts orders from customers located in the U.S. for transactions on U.S. markets.[27] In that case, the firm must comply with all applicable U.S. laws and regulations, including the requirement to register in the appropriate capacity.

The eligibility of any firm to seek relief under this exemptive Order is subject to the following conditions:

(1) The FSA must present in writing to the Commission that:

(a) Each firm of which relief is sought is registered, licensed or authorized, as appropriate, and is otherwise in good standing under the standards in place in the U.K.; such firm is engaged in business with customers in the U.K. as well as in the U.S.; and such firm and its principals and employees who engage in activities subject to Part 30 would not be statutorily disqualified from registration under Section 89a(2) of the Act, 7 U.S.C. § 12(a)(2);

(b) It will monitor firms to which relief is granted for compliance with the regulatory requirements for which substituted compliance is accepted and will promptly notify the Commission or the NFA of any change in status of a firm that would affect its continued eligibility for the exemption granted hereunder, including the termination of its activities in the U.S.;

(c) It will provide the Commission with prompt notice of all material changes to the relevant laws in the U.K., or any rules promulgated thereunder;

(d) Customers located in the U.S. will be provided no less stringent regulatory protection than U.K. customers under all relevant provisions of U.K. law; and

(e) It will cooperate with the Commission in connection with information sharing pursuant to the FISMOU.

(2) Each firm seeking relief hereunder must represent in writing that it:

(a) Is located outside the U.S., its territories and possessions, and where applicable, has subsidiaries or affiliates domiciled in the U.S. with a related business (*e.g.*, banks and broker/dealer affiliates) along with a brief description of each subsidiary's or affiliate's identify and principal business in the U.S.;

(b) Consents to jurisdiction in the U.S. under the Act by filing a valid and binding appointment of an agent in the U.S. for service of process in accordance with the requirements set forth in Rule 30.5;

(c) Acknowledges that it can be required by FSA to provide to FSA immediate access to its books and records related to transactions under Part 30 required to be maintained under the applicable statutes and regulations in effect in the U.K. and that FSA will cooperate in providing access to such books and records in accordance with the FISMOU;

(d) Consents that all futures and options transactions with respect to customers located in the U.S. will be made on or subject to the rules of an RIE, DIE located outside the U.S., or Regulated Market, and will be undertaken consistent with the Financial Services and Markets Act 2000 and the rules and guidance set forth in the FSA Handbook;

(e) Has no principal, or employee who solicits or accepts orders from customers located in the U.S., who would be disqualified from directly applying to do business in the U.S. under Section 8a(2) of the Act, 7 U.S.C. § 12(a)(2);

(f) Consents to participate in any NFA arbitration program that offers a procedure for resolving customer disputes on the papers where such disputes involve representations or activities with respect to transactions under Part 30, even in circumstances where the claim involves a matter arising primarily out of delivery, clearing, settlement or floor practices, and consents to notify customers located in the U.S. of the availability of such a program; provided, however, that the firm may require its customers resident in the U.S. to execute the consent attached hereto as

[24] *See, e.g.,* Sections 2(a)(1)(C) and (D) of the Commodity Exchange Act.

[25] *See, e.g.,* 17 CFR Part 18 (2000).

[26] *See, e.g.,* 17 CFR Parts 17 and 21 (2000).

[27] *See, also*, CFTC Interpretative Letter 03–28 [Current Transfer Binder] Comm. Fut. L. Rep. (CCH) ¶ 29,559 (July 25, 2003) (no-action letter permitting a specific foreiign entity that has previously been granted exemption from registration by a Commission order issued under Rule 30.10 in connection with foreign futures and options to also act as an introducing broker with respect to trades executed on U.S. markets for U.S. institutional customers without registering as an introducing broker).

Exhibit A concerning the exhaustion of certain mediation or conciliation procedures made available by FSA prior to bringing an NFA arbitration proceeding; and provided further, that the firm must undertake to provide the customer with information concerning how to commence such procedures and documentation of the commencement of such procedures pursuant to the consent attached hereto as Exhibit A;

(g) Consents to refuse those customers resident in the U.S. that do not satisfy the criteria for being an Eligible Contract Participant, as defined in section 1a(12) of the Commodity Exchange Act, 7 U.S.C. 1a(12), the option of not segregating funds notwithstanding relevant provisions of the U.K. regulatory system;

(h) Consents to provide all customers resident in the U.S. no less stringent regulatory protection than U.K. customers under all relevant provisions of U.K. law; and

(i) Undertakes to comply with the applicable provisions of U.K. law and FSA rules and guidance that form the basis upon which this exemption from certain provisions of the Act and rules thereunder is granted.

As set forth in the Commission's September 11, 1997 Order delegating to NFA certain responsibilities, the written representations set forth in paragraph (2) shall be filed with NFA.[28] Each firm seeking relief hereunder has an ongoing obligation to notify NFA should there be a material change to any of the representations required in the firm's application for relief.

Any material changes or omissions in the facts and circumstances pursuant to which this Order is granted might require the Commission to reconsider its findings that the standards for relief set forth in Commission Rule 30.10 and, in particular, Appendix A thereof, have generally been satisfied. In addition, if experience demonstrates that the continued effectiveness of this Order in general, or with respect to a particular firm, would be contrary to the public interest, or other circumstances to not warrant continuation of the exemptive relief granted therein, the Commission may condition, modify, suspend, terminate, withhold as to a specific firm or otherwise restrict, the exemptive relief granted, as appropriate on its own motion.

■ Accordingly, 17 CFR part 30 is amended as follows:

[28] 62 FR 47792, 47793 (September 11, 1999). Among other duties, the Commission authorized NFA to receive requests for confirmation of Rule 30.10 relief on behalf of particular firms, to verify such firms' fitness and compliance with the conditions of the appropriate Rule 30.10 Order and to grant exemptive relief from registration to qualify firms.

PART 30—FOREIGN FUTURES AND OPTIONS TRANSACTIONS

■ 1. The authority citation for part 30 continues to read as follows:

Authority: 7 U.S.C. 1a, 2, 4, 6, 6c and 12a, unless otherwise noted.

■ 2. Appendix C to part 30 is amended by:

■ A. Removing the entries for:

Firms designated by the Securities and Investment Board;

Firms designated by the Association of Futures Brokers and Dealers;

Firms designated by the Securities Association; and

Firms designated by the Investment Management Regulatory Organization

■ B. Adding the following entry at the end of the appendix:

Appendix C—Foreign Petitioners Granted Relief From the Application of Certain of the Part 30 Rules Pursuant to § 30.10

* * * * *

Firms designated by the Financial Services Authority (''FSA'').

FR date and citation: October 10, 2003, [insert FR citation].

Issued in Washington, DC, on September 30, 2003.

Jean A. Webb,

Secretary of the Commission.

Note: The following Exhibit A will not appear in the Code of Federal Regulations.

Exhibit A—Form of Consent

In the event that a dispute arises between you, _____, and _____ with respect to transactions subject to Part 30 of the Commodity Futures Trading Commission's Rules, various forums may be available for resolving the dispute, including courts of competent jurisdiction in the United States and United Kingdom and arbitration programs made available both in the United States and United Kingdom.

In the event you wish to initiate an arbitration proceeding against the firm to resolve such dispute under the applicable rules of the National Futures Association (''NFA'') in the United States, you hereby consent that you will first commence conciliation in accordance with such procedures as may be made available by the relevant United Kingdom regulator, details of which are provided to you herewith. The outcome of such United Kingdom conciliation is non binding. You may subsequently accept this resolution, or you may proceed either to binding arbitration under the rules of the relevant United Kingdom regulator or to binding arbitration in the United States under the rules of NFA. If you accept the conciliated resolution or elect to proceed to arbitration, or to any other form of binding resolution, under the rules of the relevant United Kingdom regulator or foreign exchange, you will be precluded from subsequently initiating an arbitration proceeding at NFA.

You may initiate an NFA arbitration proceeding upon receipt of documentation from the relevant United Kingdom regulator:

(i) Evidencing completion of the conciliation process and reminding you of your right of access to NFA's arbitration proceeding, or

(ii) Representing that more than nine months have elapsed since you commenced the conciliation process and that such process is not yet complete and reminding you of your right of access to NFA's arbitration proceeding.

The documentation referred to above must be presented to NFA at the time you initiate the NFA arbitration proceeding. NFA will exercise its discretion not to accept your demand for arbitration in the absence of such documentation.

By signing this consent, you are not waiving any other rights to any other legal remedies available under law.

_____

Customer Signature

_____

Date

[FR Doc. 03–25298 Filed 10–9–03; 8:45 am]

BILLING CODE 6351–01–M

DEPARTMENT OF JUSTICE

Drug Enforcement Administration

21 CFR Part 1301

[Docket No. DEA–232F]

RIN 1117–AA70

Controlled Substances Registration and Reregistration Application Fees

AGENCY: Drug Enforcement Administration (DEA), Justice.

ACTION: Final rule.

SUMMARY: This final rule establishes the fee schedule for DEA registration and reregistration fees relating to the registration and control of the manufacture, distribution and the dispensing of controlled substances. DEA is required to adequately recover necessary costs associated with the Diversion Control Program (DCP) as mandated by the Departments of Commerce, Justice, and State, the Judiciary, and Related Agencies Appropriations Act of 1993.

EFFECTIVE DATE: December 1, 2003. The new fee schedule will be in effect for all new applications postmarked on or after December 1, 2003 and for all renewal applications postmarked on or after December 1, 2003.

FOR FURTHER INFORMATION CONTACT: Patricia M. Good, Chief, Liaison and Policy Section, Office of Diversion Control, Drug Enforcement Administration, Washington, DC 20537; Telephone (202) 307–7297.

SUPPLEMENTARY INFORMATION:

I. Introduction and Statutory Authority

The Drug Enforcement Administration (DEA) published a notice of proposed rulemaking in the **Federal Register** on February 18, 2003 (68 FR 7728) to adjust the registration and reregistration fees for controlled substances handlers. DEA's authority to collect registration fees derives from three statutory provisions.

DEA is authorized by 21 U.S.C. 821 to collect ''reasonable fees relating to the registration and control of the manufacture, distribution and dispensing of controlled substances and to the registration and control of regulated persons and of regulated transactions.'' Secondly, 21 U.S.C. 958(f) permits DEA to collect ''reasonable fees relating to the registration of importers and exporters of controlled substances or List I chemicals.''

Thirdly and importantly, the Departments of Commerce, Justice, and State, the Judiciary, and Related Agencies Appropriations Act of 1993 (Pub. L. 102–395) requires that DEA collect fees to ensure the recovery of the *full costs* of operating the Diversion Control Program (DCP). Section 111(b)(3) of the act, codified at 21 U.S.C. 886a(3), requires that ''fees charged by the Drug Enforcement Administration under its Diversion Control Program shall be set at a level that ensures the recovery of the full costs of operating the various aspects of that program.'' Section 111(b)(1) of the act also requires that ''there shall be deposited as offsetting receipts into that account all fees collected by the Drug Enforcement Administration, in excess of $15,000,000, for the operation of its Diversion Control Program.''

Following an adjustment in registration fees in 1993, the American Medical Association (AMA) and others filed a complaint in the United States District Court for the District of Columbia objecting to the new fees. After the district court issued its final order granting the government's motion for summary judgment and disposing of all claims, the AMA appealed. In the ensuing case, *AMA* v. *Reno*, the United States Court of Appeals for the District of Columbia Circuit found DEA's rulemaking to be inadequate and remanded, without vacating, the rule to DEA, requiring the agency to provide an opportunity for meaningful notice and comment on the fee-funded components of the Diversion Control Program (DCP). In doing so, however, the court also confirmed the boundaries of the DCP that DEA can fund by registration fees (*AMA* v. *Reno*, 57 F.3d 1129, 1135 (D.C. Cir. 1995)). More specifically, the court found that the current statutory scheme requires DEA to set registration fees to recover the full costs of the DCP, while requiring DEA to charge ''reasonable'' fees relating to the registration and control of the manufacture, distribution and dispensing of controlled substances and the registration and control of regulated persons and of regulated transactions.

DEA responded to the remand requirement through a notice in the **Federal Register** on December 30, 1996 (61 FR 68624), describing the fee-funded components and activities of the DCP with an explanation of how each satisfies the statutory requirements for fee-funding. A final rule was subsequently published on August 9, 2002 (67 FR 51988).

DEA, therefore, is bound by the above-referenced statutory requirements in setting fees that recover the full cost of the Diversion Control Program and its activities. DEA has developed its rulemaking according to these legislative mandates.

II. Comments Received

Following publication of the Notice of Proposed Rulemaking on February 18, 2003, DEA received 36 comments to the notice, objecting to the fee schedule contained in the proposed rule. Twenty-seven comments were received from physicians (5 comments) and veterinary (22 comments); two comments were received from pharmacists, and seven comments were received from national or state associations representing different registrant groups. Late comments were also sent by another national group after the close of the comment period. Its comments were already raised by other commenters and, therefore, are addressed accordingly in this final rule.

Most commenters objected to the proposed increase in registration and reregistration fees, most noting that the increase was ''too much'' despite the ten-year period since fees were last adjusted; one commenter wrote that he had no problem with the proposed fee increase for practitioners from $70 to $131. One commenter also raised concern that the proposed fees were based on estimated budgets for Fiscal Years 2004–2006 and that, because the fee schedule would extend only to Fiscal Year 2006, DEA could raise the fees again at that time. Several commenters inaccurately characterized the proposed registration fee as either a ''tax'' or as a ''user fee.''

Four commenters expressed concern about the programmatic and operational costs of the DCP that necessitated the proposed increase in fees. Commenters specifically addressed why the DCP budget authority has doubled since Fiscal Year 1994 and what activities, including what new initiatives, would be supported through registration fees.

Three commenters expressed concern about the potential effect of the proposed increase in fees on small businesses, particularly in the current economy.

Three comments were received regarding individual registrations. One commenter wrote that the ability of residents and hospital- and clinic-based physicians to use their employer's registration number instead of being required by DEA to maintain individual registrations causes confusion with pharmacies. Another commenter argued that veterinarians unfairly support a disproportionate share of DCP costs because veterinary clinics as free-standing hospitals must purchase separate DEA registrations unlike physicians and other practitioners affiliated with human hospitals that may work under the hospital's registration under certain circumstances. Comments also noted that a fee increase would encourage practices, especially large practices, to forego licensure of all practitioners in the practice. Similarly, two commenters requested that registration fees be calculated based on the volume of controlled substances used, as usage differs by type of registrant.

Four commenters expressed concern that Internet pharmaceutical companies selling veterinary products at discounted prices are undermining veterinarian revenue. Other areas addressed by commenters included eliminating the mandatory annual $15 million transfer to the U.S. Treasury; finding alternative sources for funding the Diversion Control Program such as fines to violators of controlled substances laws, fines to insurance companies and health care providers that use DEA registrations for identification purposes, ''taxes'' on Internet pharmacies, fees to large drug companies that ''have billions of dollars,'' and Congressional appropriations; and the provision of additional time beyond the 30 days following publication of the final rule for the new fees to go into effect.

Each of the points raised by commenters is addressed below.

III. Objections to Fee Increase

All but one of the commenters objected to the increase in registration and reregistration fees, many characterizing them as ''arbitrary'' and

''exorbitant.'' Multiple commenters noted that physicians and other practitioners have been experiencing declining reimbursements and increasing operating costs, malpractice insurance costs, and costs of complying with other Federal and State requirements combined with high medical school debt. Several commenters suggested that the fee be raised 1.6 percent consistent with the 2003 increase in Medicare reimbursements; others suggested a 3–4 percent annual increase or a flat $5–10 increase. One commenter questioned how the fee increase compares with the rate of inflation. One commenter alleged that DEA was ''arbitrarily'' raising fees, and several others commented that DEA had not provided adequate justification for the fee increase.

As described above, DEA's authority to charge registration fees to support the Diversion Control Program derives from three statutory provisions. DEA is authorized by 21 U.S.C. 821 to collect reasonable fees relating to the registration and control of the manufacture, distribution and dispensing of controlled substances. Secondly, 21 U.S.C. 958(f) permits DEA to collect reasonable fees relating to the registration of importers and exporters of controlled substances.

Thirdly, the 1993 Departments of Commerce, Justice, and State, the Judiciary, and Related Agencies Appropriations Act established the Drug Diversion Control Fee Account (DDCFA) and specifically mandated that fees ''shall be set at a level that ensures the recovery of the full costs of operating the various aspects of that program.'' 21 U.S.C. 886a(3). Congress, in using the mandatory term ''shall'' as opposed to the discretionary ''may,'' unambiguously required DEA to increase its then-existing registration fees resulting in registrants fully funding DCP expenses. DEA, therefore, lacks discretion in this matter and must fund its DCP totally from registration fees (that is, not from fines, Congressional appropriations or other potential sources). Assuming for the sake of argument that there is some doubt as to whether Congress intended DEA to entirely fund the DCP from registration fees due to its use of the phrase ''various aspects'' of the DCP as opposed to something like ''all aspects,'' the House Conference Report notes that the act's language ''requires the Drug Enforcement Administration to set fees to recover the full cost of their Diversion Control Program.'' H.R. Conf. Rep. No. 918, 102nd Cong., 2d Sess. 44 (1992).

Congress also mandated fulfillment of the requirements of the Appropriations Act ''(n)otwithstanding (a)ny (o)ther (p)rovision of (l)aw,'' thus making its provisions supersede all other provisions of law that would otherwise prevent or impede DEA's recovery of the full costs of the DCP through registration fees. H.R. 5678, 102nd Cong., 2d Sess. 111 (1992).

Accordingly, while DEA recognizes the economic pressures facing practitioners such as declining Medicaid reimbursements and increasing operating, equipment, and insurance costs, the current statutory scheme requires DEA to set registration fees to recover the full costs of the DCP, while limiting DEA to charge ''reasonable'' fees relating to the registration and control of the manufacture, distribution and dispensing of controlled substances. DEA does not have the discretion to partially fund the DCP or to find alternative sources of funding for the program. Rather it is mandated by law to fund the DCP fully through registration fees.

DEA has not adjusted the registration and reregistration fees since March 22, 1993 when it published a final rule in the **Federal Register**, establishing registration fees for controlled substances registrants (58 FR 15272). (This fee schedule then went into effect for all registration applications postmarked on April 21, 1993 or later and all renewal applications with an expiration date of May 21, 1993 or later). Following publication of the final rule, the American Medical Association (AMA) and others filed a complaint in the United States District Court for the District of Columbia objecting to the new fees. The district court issued its final order granting the government's motion for summary judgment and disposing of all claims. Following an appeal by the AMA, the United States Court of Appeals for the District of Columbia Circuit found DEA's rulemaking to be inadequate and remanded, without vacating, the rule to DEA, requiring the agency to provide an opportunity for meaningful notice and comment on the fee-funded components of the Diversion Control Program. DEA responded to the remand requirement through a final rule published in the **Federal Register** on December 30, 1996 (61 FR 68624). DEA then published its Final Rule on the Drug Diversion Control Fee Account and Diversion Control Program funding, responding to comments and clarifying the activities to be funded as part of the DCP, on August 9, 2002 through publication in the **Federal Register** (67 FR 51988).

Over the period of ten years the costs of operating the Diversion Control Program (DCP) have increased, necessitating a review of fees and an increase in those fees that support the program as mandated by statute. Such increase in operating costs, detailed below, include a greater number of diversion investigators, increased investigation costs, additional diversion control efforts such as controlling diversion of licit controlled substances on the Internet, inflation, and increases in salaries and compensation for employees. In setting the fees, DEA is mandated to recover the ''*full costs*'' (emphasis added) of the DCP and does not have the discretion to adjust the fees according to Medicare reimbursements or inflation as suggested by some commenters. DEA is also mandated to charge ''reasonable'' fees. Because the fees do not represent a significant financial burden on registrants (see discussion below regarding the impact on small businesses), DEA has determined that the fees contained in this final rule are reasonable. The individual effect on registrants is minimal, representing from 0.21% to as little as 0.01% of average annual sales (or income) for those registrants qualifying as small businesses. For registrants that are large businesses with higher sales, the impact of the fee is even less.

IV. Fees as a Tax or User Fee

Several commenters inaccurately characterized the registration fee as a tax or user fee. One commenter expressed that the DCP is a program from which the general public benefits and from which physicians do not derive a benefit despite paying a fee. User fees are charges that may be assessed only when a fee-funded service provides special benefits to an identifiable recipient beyond those that accrue to the general public, pursuant to the Independent Offices Appropriations Act (IOAA) (OMB Circular A–25, July 15, 1993). Examples of such services include activities that: Enable the beneficiary to obtain more immediate or substantial gains or values than those that accrue to the general public (*e.g.*, receiving a patent, insurance, or guarantee provision, or a license to carry on a specific activity or business); provide business stability or contributes to public confidence in the business activity of the beneficiary (*e.g.*, insuring deposits in commercial banks); or that are performed at the request of or for the convenience of the recipient, and are beyond the services regularly received by other members of the same industry or group or by the general public (*e.g.*, receiving a passport, visa, airman's

certificate, or a Custom's inspection after regular duty hours).

However, the IOAA applies ''only when there is no independent statutory source for the charging of a fee or where a fee statute fails to define fee-setting criteria'' *AMA* v. *Reno*, 857 F. Supp. at 84 (D.D.C. 1994). Accordingly, the controlled substances registration fees that are the subject of this rulemaking *do not constitute user fees* because other statutory authority (as described above) set specific criteria and funding guidelines. Moreover, in the 1993 Appropriations Act, Congress mandated fulfillment of the requirements of the Act ''(n)otwithstanding (a)ny (o)ther (p)rovision of (l)aw,'' thus making its provisions supersede all other provisions of law that would otherwise prevent or impede DEA's recovery of the full costs of the DCP through registration fees. H.R. 5678, 102nd Cong., 2d Sess. 111 (1992).

However, with that said, registrants who pay the fees *do* receive special benefits not conveyed on the general public. Specifically by registering with the DEA, registrants are able to handle controlled substances, an immediate ''gain or value'' not provided to the general public. Because of the closed system of drug distribution and the diversion control activities of the DCP, there are some tangential public benefits as well, much in the same way that the system of driver's licenses (by which individual drivers receive a specific benefit not conveyed on the public at large) increases the general safety on public roads thus also conveying an ancillary public benefit.

Because Congress specified in the 1993 Appropriations Act (with collection and spending criteria established by prior law (21 U.S.C. 821 and 958(f)), that ''(f)ees charged by the Drug Enforcement Administration under its Diversion Control Program shall be set at a level that ensures the recovery of the full costs of operating the various aspects of that program'' and funds from the Drug Diversion Control Fee Account (DDCFA) to fund the DCP will be raised ''in accordance with estimates made in the budget request of the Attorney General'' (21 U.S.C. 886a(3) and (4)), the registration fees charged by DEA pursuant to this act are not user fees subject to the IOAA because the Appropriations Act and related statutory authorities constitute independent statutory sources for charging the fee and define fee-setting criteria, *i.e.*, to cover the full costs of the DCP. *AMA* v. *Reno*, 857 F. Supp. 80 (D.D.C. 1994).

Thus, the appropriate test for fee-funding DCP activities is not whether they convey a special benefit to registrants but whether the fees are ''reasonable'' and ''relat(e) to the registration and control of the manufacture, distribution, and dispensing of controlled substances'' or relate to the registration of importers and exporters, and are set ''at a level that ensures the recovery of the full costs of operating the various aspects of (the Diversion Control) program.'' 21 U.S.C. 821, 958(f) and 886a(3). DEA has concluded that the fees meet both of these criteria.

V. Diversion Control Programmatic and Operational Costs

Several commenters wrote that DEA had not provided adequate justification for the fee raise with some requesting detailed descriptions of the costs and expenditures made by the DCP. Commenters questioned the programmatic and operational costs of the DCP and raised concern about the rising costs of DCP activities over the past ten years that necessitated the fee increase.

This section describes fee-fundable activities that constitute the DCP, the budget justification for the fee increase, and how the fees were calculated and addresses related comments regarding the operation of the DCP.

A. Fee-Fundable Activities

DEA's mission with respect to licit controlled pharmaceuticals is to prevent, detect and eliminate the diversion of controlled pharmaceuticals from legitimate channels to illegal use, while at the same time ensuring their availability for legitimate medical and scientific purposes. To facilitate these goals, Congress, through the Controlled Substances Act, established a closed system of controlled substance distribution encompassing manufacturers, distributors, pharmacies and practitioners; that is, within this closed system a controlled substance can be traced from the time it is manufactured to the time it is dispensed to the ultimate user. This system has proven effective in reducing the diversion of these substances from legitimate channels to the illicit market. Components of this closed system include scheduling of all controlled substances, registration of all controlled substance handlers, recordkeeping for accountability, security, and manufacturing quotas, all under the oversight of the DCP. (The DCP also possesses similar chemical control responsibilities pursuant to the Chemical Diversion and Trafficking Act (CDTA) and subsequent legislation. The chemical diversion control program and/or its registration and reregistration fees are outside the domain of this rulemaking and therefore are not affected by this rulemaking.)

The plain language of the 1993 Appropriations Act requires DEA to set and collect registration fees to cover the full costs of operating the DCP. In its 1993 final rule publication setting new registration fees, DEA examined all activities that relate to the registration and control of the manufacture, distribution and dispensing of controlled substances and to the registration (and control) of importers and exporters. DEA determined that ''activities contained in the [diversion] program which give rise to the fees consist of diversion investigators, analysts, technicians, and clerical personnel salaries and expenses; and travel, rent, utilities, supplies, equipment and services associated with these positions for the registration and control of the manufacture, distribution and dispensing of controlled substances'' (58 FR 15273). DEA determined that it would not fee-fund costs associated with chemical control efforts (see below), clandestine laboratory efforts, overseas staff (specifically diversion investigators assigned to foreign posts), DEA's Office of Chief Counsel or executive direction (58 FR 15273). DEA concluded that these activities were excluded from the Attorney General's budget delineation for the category of ''Diversion Control'' and thus not included in the determination of the fees. *Id.*

At the time this initial rule was published on March 22, 1993, 21 U.S.C. 821 did not extend to chemical control activities (''regulated transactions''). Accordingly, there were no registration or fee requirements for handlers of List I chemicals, and chemical control activities were not included among those to be supported by controlled substances fees. Congress amended 21 U.S.C. 821 on December 17, 1993 to require reasonable fees relating to ''the registration and control of regulated persons and of regulated transactions.'' Domestic Chemical Diversion Control Act of 1993, 3(a), Pub. L. 103–200, 107 Stat. 2333. Despite this amendment, to date DEA's chemical control activities have continued to be supported by appropriated funds and *not* by the controlled substances fees through the Drug Diversion Control Fee Account (DDCFA). Again, DEA's chemical control activities are not the subject of this rulemaking.

In its December 1996 **Federal Register** notice, DEA further excluded from fee-funding those activities that incidentally support the DCP but are funded

elsewhere in the DEA Salaries Budget (and thus not fee-funded). Specific examples listed in the notice include ''support provided by the Attorneys in DEA's office of Chief Counsel Diversion Regulatory Section; certain laboratory service support; DEA Automated Data Processing Systems support (except the Automation of Reports and Consolidated Orders System (ARCOS) and the Controlled Substances Act (CSA) database); Office of Training staff; DEA Management and Administrative Support; Office of Congressional and Public Affairs; Intelligence Support and Diversion Investigators assigned overseas'' (61 FR 68631).

In its August 2002 Final Rule published in the **Federal Register**, DEA reviewed the history and statutory authority of fee-fundable activities in detail and further described what activities would be fee-funded via the DDCFA. These activities include: Scheduling, registration, investigation, inspection, data collection and analysis, training, establishing production quotas, cooperative efforts with state, local and other federal agencies, cooperative efforts with the regulated industry, international activities relating to the registration and control of the manufacture, distribution and dispensing of controlled substances, and attendant management, personnel, administrative and clerical oversight for the DCP because they too relate to the fee-funding criteria of 21 U.S.C. 821 and 958(f). Fee-fundable activities also include travel, rent, utilities, supplies, equipment and services associated with the above-listed activities (67 FR 51988).

Certain international activities also are supported through fee funds because they relate to the registration and control of the lawful manufacture, distribution and dispensing of controlled substances. Controlled substances lawfully imported or exported relate to Section 821 requirements because imported substances are subsequently distributed to other DEA registrants, and exported substances are initially manufactured and/or distributed domestically prior to export. As explained in the December 30, 1996 **Federal Register** notice, the Controlled Substances Act's closed system of controls over manufacturing, distribution and dispensing was not established and is not administered within the isolation of our domestic borders. Rather, the controls are part of a global system of national and international laws designed to establish an interrelated, worldwide structure of control over the manufacture, distribution, dispensing, import and export of controlled substances, so that controls or lack of controls in one country do not undermine controls in another. Congress found and declared that illegal importation, along with illegal manufacture, distribution, possession and improper use of controlled substances, has a detrimental effect on the health and welfare of the American people, recognizing that ''(a) major portion of the traffic in controlled substances flows through interstate and foreign commerce.'' 21 U.S.C. 801(2) and (3).

The international drug control treaties to which the United States is a signatory require that each party establish a program of controls relating to the registration and control of the manufacture, distribution, dispensing, import and export of controlled substances. The specific language of the Controlled Substances Act and its implementing regulations recognize the obligations of the United States under the international conventions. *See* 21 U.S.C. 801, 801a, 811(d)(1), 823(a) and 958(a), and 21 CFR 1307.02.

The Controlled Substances Act expressly recognized that the United States is a party to the Single Convention on Narcotic Drugs of 1961 and other conventions ''designed to establish effective control over international and domestic traffic in controlled substances.'' 21 U.S.C. 801(7). Likewise, Congress recognized that the abuse of psychotropic substances has become ''a phenomenon common to many countries'' that ''is not confined to national borders,'' making it ''essential that the United States cooperate with other nations in establishing effective controls over international traffic in such substances.'' (21 U.S.C. 801a(1)). Congress further recognized that the United States joined with other countries in executing the Convention on Psychotropic Substances, ''which is designed to establish suitable controls over the manufacture, distribution, transfer, and use of certain psychotropic substances.'' (21 U.S.C. 801a(2)). Congress acknowledged that before the Senate could ratify the convention, the Controlled Substances Act required amending to bring it into compliance with the requirements of the convention. Congress thus recognized that the conventions are an integral part of the United States' programs regarding the registration and control of the manufacture, distribution, and dispensing of controlled substances. By implementing and ratifying the international treaties, Congress recognized that a strong domestic program relating to the registration and control of the manufacture, distribution, dispensing, import or export of controlled substances depends on establishing and maintaining strong controls within other individual nations.

Thus, DEA is obligated to conduct, as part of its Diversion Control Program, certain international activities relating to the lawful manufacture, distribution, dispensing, import and export of controlled substances. DEA fee-funds most international diversion control activities that it had historically conducted since 1971, considering each related to 21 U.S.C. 821 and 958(f) criteria. Among those international activities that are excluded from DDCFA funding are international chemical control activities.

Additional detail on specific international activities supported through fee-funds as part of the DCP is contained in the August 9, 2002 **Federal Register** notice (67 FR 51988).

While diversion control and registration activities are conducted by DEA's Office of Diversion Control, other DEA elements undertake activities in support of the DCP in addition to supporting nonfee-fundable activities. As such, these other elements expend fee-funds to support those fee-fundable DCP activities. For example, the Office of Administration provides office space, makes appropriate office renovations and supplies the security guard force to the diversion groups. The Office of Administration pays rent and other expenses with fee funds. The Office of Resource Management expends fee funds for payroll and employment benefits for the DCP workforce. The Office of Training trains the DCP workforce and spends fee funds on training in support of fee-fundable activities, for example seminars for industry on controlled substances (but not on staff; see below).

Not included among fee-fundable diversion control activities are several elements of DEA operations that, though not part of the DCP, incidentally support the activities of the DCP. To date these activities have been funded through Congressional appropriations rather than through fee funds. Examples of such elements include two sections within the Office of Chief Counsel that (a) litigate administrative actions related to DEA registrants and (b) provide legal support on regulatory policy matters; staff salaries and related staff expenses within a section of the Office of Training that is specifically dedicated to the DCP (note, certain eligible training activities are fee-funded as noted above); a portion of the Office of Forensic Sciences Special Testing Laboratory that supports authentic

sample analyses for licit drugs; and a portion of the budget for DEA's agency-wide computer network, ''Firebird'', related to the work of the DCP. As was discussed more fully in previous rulemakings regarding the use of controlled substances fee funds, while these elements incidentally support diversion control efforts, because their overall function is not primarily devoted to diversion control, they have been included elsewhere in the DEA budget and not as part of fee-fundable activities. In the absence of specific guidance in the 1993 Appropriations Act as to which activities were encompassed within the DCP and thus fee-fundable, DEA has followed the plain language of the act and used the budget categories that had historically been included in the DCP budget request of the Attorney General. As described in DEA's 1996 **Federal Register** notice, for the purposes of budget formulation and appropriation, DEA historically has identified only those resources (with their overhead costs) that were specifically devoted to diversion control efforts as part of the DCP in its annual budget submission to Congress. Other resources which support a broad range of DEA activities, including diversion control, therefore have been included in the budget formulation and appropriation process and not funded through fee funds (61 FR 68631). At this time these activities will continue to be funded through appropriated funds as DEA considers how to better comply with the applicable laws in the future.

B. Budget Justification for Fee Increase

Several commenters questioned the justification for the budget increase necessitating the raise in registration and reregistration fees. Since the fees were last raised in 1993, costs of operating the Diversion Control Program (DCP) have increased. As described above, fee-fundable activities of the DCP include: scheduling, registration, investigation, inspection, data collection and analysis, training, establishing production quotas, cooperative efforts with state, local and other federal agencies, cooperative efforts with the regulated industry, certain international activities relating to the registration and control of the manufacture, distribution and dispensing of controlled substances, and attendant management, personnel, administrative and clerical oversight for the DCP. Fee-fundable activities also include travel, rent, utilities, supplies, equipment and services associated with the above-listed activities.

The costs of the DCP have increased due to both the rising costs of ''doing business'' over the past ten years as well as the implementation of a number of new initiatives and programs. One commenter raised concern that the increase in fees seemed to cover the increased costs of operating the DCP with less emphasis on new programs and activities. As summarized below, the increased costs of operating the DCP to date as well as the anticipated costs through Fiscal Year 2006 have included/include a number of new initiatives including: the creation of Tactical Diversion Squads in Fiscal Year 1997, responding to OxyContin® diversion, responding to Internet-based diversion, development of a system to permit electronic transmission of controlled substances prescriptions, development of controlled substances electronic order forms, upgrades to the Automation of Reports and Consolidated Orders System (ARCOS), significant improvements to registration customer/forms service, and increases in the number of diversion investigators.

In Fiscal Year 1994 the Budget Authority for the DCP was $57.1 million. The Budget Authority for Fiscal Year 2004, based on the President's Budget, is $ 118.6 million. The growth in the DCP has been driven by a number of factors some of which have been reflected in the DEA budget submissions such as the creation of Tactical Diversion Squads in Fiscal Year 1997. Other areas of DCP expansion include the costs of responding to the diversion of OxyContin® which involved opening 247 cases between October 1999 and March 2002, including 159 cases in Fiscal Year 2001 alone—a 270 percent increase from Fiscal Year 2000. These cases, for example, have led to 328 arrests.

DEA also has expended increased time and resources in responding to the diversion of licit controlled substances over the Internet, a concern of several commenters. DEA has opened a number of cases leading to arrests and convictions for illegal diversion over the Internet. In total the number of diversion arrests more than doubled in the five year period of Fiscal Year 1995 (444 arrests) to Fiscal Year 2000 (941 arrests). In Fiscal Year 2001 DEA made 871 diversion arrests. In Fiscal Year 2002 DEA made 714 arrests, and in the first six months of Fiscal Year 2003, DEA made 364 arrests.

The additional investigative and programmatic responsibilities to support investigations have required additional diversion investigators, headquarters staff and increased financial resources to support these staff and their efforts to prevent the diversion of licit controlled substances. Over the past ten years the costs of supporting personnel and the costs of simply ''doing business'' have increased as a result of inflation and general rises in costs. These increases affect staff salaries, benefits, as well as the cost of program-related travel, rent, utilities, supplies, equipment and services associated with diversion control activities. The increasing costs of personnel, activities and general operations— including new initiatives— are shown in the following table that outlines the budget authority for each year from Fiscal Year 1994 to Fiscal Year 2006 (estimated). Note these figures do not include the required $15 million transfer to the U.S. Treasury.

Fiscal year	Budget authority (millions)
FY94	$57.1
FY95	58.4
FY96	62.2
FY97	67.8
FY98	73.2
FY99	76.7
FY00	80.3
FY01	83.5
FY02	86.2
FY03	89
FY04	118.6
FY05 (est.)	139.4
FY06 (est.)	147

C. Use of Estimated Budget Authorities

For Fiscal Years 2005 and 2006 the above budget authority estimates were derived using the President's Budget for Fiscal Year 2004. One commenter expressed concern that DEA was using estimated budget figures in its calculations for the Fiscal Year 2004–2006 period. Use of estimated budgets for future years is a common practice in budgeting to forecast future expenditures and plan future budgets. Because the President's Budget Request for the upcoming fiscal year is typically submitted to Congress in the spring of the prior year with approval following that, if DEA were to wait and use ''actual'', Congressionally-enacted budgets on which to base the fee schedule as suggested by the commenter, significant delays would result in calculating the fees, resulting in potential shortfalls to the fee account which, by statute, must support all activities of the DCP. Importantly too, adjusting the registration and especially the reregistration fees each year would cause significant confusion among registrants as to the correct amount to pay, particularly as the adjustment often would be effective immediately in order to comply with the statute that fees support the ''full costs'' of the DCP. The

process also would result in increased fee calculation, fee collection, and related operating costs for the DCP which would translate to higher registration fees.

D. Calculation of Current Fee

The President's Fiscal Year 2004 budget was calculated using the Fiscal Year 2003 budget as a base and adjusting for inflation, salary increases and programmatic increases or enhancements. The Fiscal Year 2004 budget of $118,561,000 for the DCP was submitted by the President to Congress on February 3, 2003. The Fiscal Year 2004 budget authority of $118,561,000 (that does not include the $15 million transfer to the U.S. Treasury) accounts for increases in program costs due to inflation, increases in federal staff salaries, and additional funds to undertake a number of new initiatives to prevent, detect and eliminate the diversion of controlled substances while ensuring an adequate supply for legitimate medical and scientific purposes. Additional funds would support diversion investigation (93 positions), OxyContin® diversion control, and implementation of a system to detect Internet sites that may divert controlled substances and investigation of those sites, as warranted. Because the registration fees have not been raised since 1993, in recent years the DCP has not been operating with the ideal staffing level of diversion investigators due to budget constraints. The additional funds for OxyContin® and improved Internet diversion control will permit DEA to conduct additional and more complex investigations into the diversion of pharmaceutical controlled substances. Additional funds also would support forty positions and the development of systems to permit the electronic transmission of controlled substances orders and controlled substances prescriptions. These electronic alternatives will provide a similar or higher degree of security/integrity than current paper-based systems and will help DEA to meet its legal mandates under the Government Paperwork Elimination Act. Several commenters highly praised the electronic systems and the increased efficiencies afforded to industry. By increasing reliance on technological resources, the electronic systems also will help to control DCP costs in the future; two commenters raised the issue of streamlining DCP operations and controlling costs through greater reliance on technological resources. The total cost of program enhancements for Fiscal Year 2004 is $27,062,000. Including the mandatory transfer to Treasury of $15 million, the total amount required to be recovered for Fiscal Year 2004 is $133,561,000.

To calculate the anticipated President's Budget Request for Fiscal Year 2005, DEA used a baseline of the Fiscal Year 2004 President's Budget of $118,561,000 (described above) and adjusted the baseline figure for increases in program costs due to inflation (including such items as postage rate increases, increases in cost of employee health benefits, increases in GSA rent, etc.), and costs of federal staff pay increases. The anticipated President's Budget Request for Fiscal Year 2005 is $139,364,000. This figure, revised since the Notice of Proposed Rulemaking in February 2003 because of new guidance on inflationary figures and updated capital asset planning and budgetary information, includes costs to support systems to permit the electronic transmission of controlled substances prescriptions and electronic orders of Schedule I and II controlled substances (systems highly desired and praised by industry, including commenters to the proposed rule), the support and operation of DEA's Internet investigations, a major upgrade to the Automation of Reports and Consolidated Orders System (ARCOS), significant improvements to registration customer/forms service, and 39 additional positions related to these activities. Other funds accounted for include liaison, policy, regulatory, and analytical activities of the Diversion Control Program. Including the mandatory transfer to Treasury of $15 million, the total amount required to be recovered for Fiscal Year 2005 is $154,364,000.

The anticipated President's Budget Request for Fiscal Year 2006 of $147,028,000 was calculated using the same method. This figure also has been revised since the proposed rule based on updated budget figures and reflecting changes in inflationary growth guidance from the Department of Justice. DEA used the anticipated budget request for Fiscal Year 2005 and adjusted that figure for inflationary growth and increases in federal staff salaries, rent and other overhead costs. Including the mandatory transfer to Treasury of $15 million, the total amount anticipated to be required to be recovered for Fiscal Year 2006 is $162,028,000.

In calculating inflationary growth, DEA used inflation figures of 1.5 percent for Fiscal Year 2004, 1.5 percent for Fiscal Year 2005 and 1.6 percent for Fiscal Year 2006 and salary increase assumptions of 4.1 percent for Fiscal Year 2004 and 3.4 percent for both Fiscal Year 2005 and Fiscal Year 2006, based on the Fiscal Year 2005 Department of Justice Modular Cost Standards and the President's Economic Assumptions, respectively.

To calculate the fee schedule for Fiscal Year 2004–2006, DEA used the total amount necessary to collect for the Fiscal Year 2004–2006 period of $449,953,000 and, based on specific statistical calculations, then calculated the fee for each registrant category. To comply with the law that DEA recover the full costs of the DCP, DEA then developed the specific fee levels for each registrant category.

To calculate the fee for each registrant category, DEA first estimated the number of paying registrants for the Fiscal Year 2004–2006 period and then used this figure combined with the full amount required to be collected for this period to set the new fee rate. To calculate the number of paying registrants, DEA used logarithmic regression analysis to project the yearly registrant figures based on historical registrant data for the period of Fiscal Year 1994 through Fiscal Year 2001.

DEA then estimated the number of registrants for each registrant category since different registrant categories pay different fees. Because there were insufficient data for some activities to perform regression analysis, DEA used the percentage for each category using data from the corresponding cycle years in the past.

Finally, based on the analyses conducted, DEA developed the fees for each registrant category consistent with its current fee structure. In doing so, DEA opted to set the fee level for a three-year period (Fiscal Years 2004–2006) to avoid the heavy burden on registrants and the additional administrative expenses to DEA that resetting the fee each year would impose. Accordingly, the fee schedule (see below) developed reflects the total amount necessary to be collected for the full three-year period (Fiscal Years 2004–2006) divided by projected registrants and accounting for projected registrant growth by category for each fiscal year. Because different categories of registrants pay different amounts, DEA weighted the number of registrants in each category to ensure the appropriate reflection in the fee schedule. Because the registrant fees reflect the total amount necessary to be collected for the Fiscal Year 2004–2006 period, there is the possibility that DEA may accumulate additional funds beyond those necessary for actual program operations in the initial year (Fiscal Year 2004), but in the final year of the period (Fiscal Year 2006) fee collections are anticipated to fall short

of the amount necessary to cover expenditures in that year, so DEA will then draw down the previously collected surplus. The alternatives to this approach would be to reset the fee each year or to set a different fee for each fiscal year; both of these options would cause unnecessary confusion and would impose greater administrative burdens on DEA and registrants.

Because of the updated and slightly reduced budget figures for Fiscal Year 2005 and Fiscal Year 2006, it was necessary for DEA to recalculate the fee levels for each category of registrant. As a result, the resulting fee schedule reflects minor changes to the fee levels as indicated below. For most registrants, this change represents a reduction in fee from that included in the Notice of Proposed Rulemaking.

Registrant class	Annual cost
Manufacturers	$1,625
Distributors, Importers/Exporters	813
Dispensers/Practitioners**	130
Researchers, Narcotic Treatment Programs	130

** The three-year registration and reregistration fee for dispensers (including practitioners, hospitals/clinics, and retail pharmacies) and teaching institutions is $390.

This rulemaking supplants the fee structure proposed in the Notice of Proposed Rulemaking published in the **Federal Register** on February 18, 2003.

E. Other DCP Operational Issues

Several commenters questioned the efficiency of DCP operations as related to the rising cost of operating the program, with some raising the issue of streamlining DCP operations through enhanced use of technology, computer upgrades, and improved business practices to negate the need for a fee increase. The mission of the DCP is to prevent the diversion of licit controlled substances which is done in the most efficient and streamlined manner possible. This mission requires the outlay of funds to support diversion investigations and monitoring of the closed system that was created by the Controlled Substances Act to ensure that registrants maintain controls over their activities with controlled substances to prevent and detect their diversion.

DEA works diligently to achieve administrative efficiencies in all of its programs, including the Diversion Control Program. Through a scheduled, periodic review process, virtually all aspects of the DCP are inspected to detect any waste, fraud or abuse. All expenditures charged to the DDCFA also are reviewed and approved by an independent unit charged with this task. Moreover, each of DEA's annual budget requests to Congress, which contains all components of each DEA program, including the DCP, is available for public review. Each budget request is examined and approved by both the Department of Justice and the Office of Management and Budget. DEA will continue to review expenditures through Fiscal Year 2006 and will adjust the fee schedule as necessary again at that time as a result of budget reviews. In February 2003 DEA also established a separate unit, the Diversion Fee Account Validation Unit, to review, approve, and audit fee-funded expenditures.

DEA has undertaken several initiatives to streamline aspects of the DCP both for the DEA and for registrants. For example, DEA is currently developing a system to permit the electronic transmission of controlled substances prescriptions which will significantly increase the efficiency by which prescriptions are transmitted from prescriber to pharmacy. This system, however, will not reduce the review requirements of DEA employees that monitor the prescription process for controlled substances. DEA also is developing a system to permit the electronic transmission of controlled substances orders which, again, will increase efficiencies for industry. DEA is also pursuing upgrades to the Automation of Reports and Consolidated Orders System (ARCOS) and other technological improvements to its information management systems to increase internal efficiencies. In general, consistent with the performance objectives and goals outlined in its Strategic Plan, DEA is constantly monitoring its operations for areas that can be improved through better use of technology and streamlining of business practices.

One commenter also questioned the exclusion of specific goals and performance standards in the notice of proposed rulemaking. Specific performance goals are included in DEA's Strategic Plan and are therefore not duplicated in rulemaking notices. Moreover, in terms of performance measures, as mandated by the Government Performance and Results Act (GPRA) and the President's Management Agenda, DEA, like all other agencies and components, is required to provide a budget summary that incorporates performance information on a quarterly basis. That is, DEA already integrates budget and performance in order to evaluate the effectiveness of programs relative to long-term, measurable outcome goals.

More specifically, in response to GPRA and the President's Management Agenda, the DCP has restructured its budgetary reporting on the Drug Diversion Control Fee Account (DDCFA) to include performance measures that are consistent with DEA's Strategic Plan and reflect the effectiveness of programmatic activities funded by registrant fees. Among the objectives included in the DEA Strategic Plan is continued support to the registrant population through improved technology, including E-commerce and customer support, while maintaining cooperation, support, and assistance from the regulated industry. These efforts, funded through registration fees, will provide immediate benefits to the registrant population such as streamlined processing and improved access to information. They also will reduce the paperwork burden on small businesses; reduce forged or stolen prescriptions; improve authenticity verification of the prescribing or ordering party and reduce processing time; increase overall security; and improve DEA's data quality, agency efficiency and responsiveness in carrying out its mission.

VI. Effects on Small Businesses

As part of its notice of proposed rulemaking published on February 18, 2003, DEA noted that the rulemaking does not constitute a major rule as defined by section 804 of the Small Business Regulatory Enforcement Fairness Act of 1996. While the actual fee collections as part of the registration fee process (independent of this rulemaking) result in an annual effect on the economy of $100,000,000 or more, the net effect of the fee changes captured in this rulemaking on the economy will be less than $100,000,000 and will not result in a major increase in costs or prices or cause significant adverse effects on competition, employment, investment, productivity, innovation, or on the ability of United States-based companies to compete with foreign-based companies in domestic and export markets. Moreover, the individual effect on small business registrants is minimal ranging from $130 to $1,625 per year with the majority of affected registrants paying an annual fee of $130 (or $390 for three years). In categories of registrants qualifying as small businesses (see below), the fee represents less than 0.21% of average annual sales (or income) based on U.S. Census and Bureau of Labor Statistics data (latest available data from 1997). A breakdown of the effect of the fees on

these categories of registrants is provided below.

Based on an evaluation of U.S. Census data, a certain percentage of manufacturers, hospitals/clinics, and pharmacies, narcotic treatment programs and all practitioners that are registrants with the DEA are likely to be small, as defined by the Small Business Administration. All distributors, importers and exporters are likely to be large. All exporters are likely to be large as they usually are also distributors or manufacturers, and only large manufacturers are likely to be involved in exporting. Researchers, teaching institutions, and analytical labs are assumed to be associated with large institutions or government entities and therefore not qualifying as small businesses.

Manufacturers fall into one of two industry classifications: pharmaceutical preparation or medicinal and botanical manufacturing. Based on DEA data on registered manufacturers, DEA estimates that 381 of the 460 manufacturers registered with DEA qualify as small businesses (Small Business Administration definition of less than 750 employees). For manufacturers in the small business category of 20–49 employees, the fee of $1,625 represents less than 0.02% of the average annual sales of $9.7 million (U.S. Census figures).

There are 61,463 pharmacies registered with the DEA and eligible to handle controlled substances. According to the National Association of Chain Drug Stores (NACDS) and census data on mail order prescription firms, there were 35,428 chain pharmacies, mass merchant pharmacies, supermarket pharmacies, and mail order pharmacies in 2001 (latest data available). It is assumed that the remaining 26,035 DEA registrants are independent pharmacies and that these independent pharmacies are small businesses. The chain drug stores, mass merchant pharmacies, supermarket pharmacies, and mail order pharmacies are assumed to be large establishments. For pharmacies in the $250,000–$499,000 category of annual sales, a fee of $130 per year represents 0.05% of average annual sales. In this category, the mean value of annual sales is $429,853 according to the U.S. Census data of which the annual registration fee represents 0.03%.

There are 14,796 hospitals registered with DEA to handle controlled substances. U.S. Census data indicate there are 6,590 hospitals; thus the remaining 8,206 registrants are assumed to be clinics. Census data also indicate there are 4,434 large hospitals; therefore, assuming all hospitals are registered with the DEA, DEA estimates there are 2,156 small hospitals. There are 3,260 clinics that can be defined as large. Thus, assuming that all large clinics are registered with DEA, DEA assumes that the remaining 4,946 clinics that are DEA registrants are small. For hospitals in the small business category of $1 million–$2.5 million in annual revenue, the annual fee of $130 represents less than 0.01% of average annual revenues. For clinics and narcotic treatment programs with annual revenues of less than $100,000 the annual fee of $130 represents 0.13% of annual revenue. Or for entities with the mean annual revenue of $61,909 in this group, the fee represents 0.21% of annual revenue. There are 1,166 narcotic treatment programs registered with the DEA.

Finally, there are 1,038,000 practitioners registered with the DEA to handle controlled substances—the largest registrant category. Because practitioners may hold multiple registrations and because practitioners register for three-year cycles, this figure may double count some practitioners and, accordingly, represents a high estimate. The majority of registered practitioners are physicians, followed by dentists and veterinarians. As of May 2003, there are 736,449 physician registrants, 164,630 dentist registrants, 51,101 veterinarian registrants, 44,800 nurse practitioner registrants, and 24,077 physician assistant registrants. Other practitioner registrants include optometrists, nursing homes, animal shelters, ambulances, naturopaths, euthanasia technicians, certain pharmacists in the state of Washington, certain veterinarian technicians in the state of California, and doctors of oriental medicine.

For the three largest groups of registrants in this category, data from the Bureau of Labor Statistics (2001 survey data) indicate the average annual salary of physicians to be $110,020, of dentists to be $110,790 and of veterinarians to be $69,150. For practitioners with average annual salaries of less than $100,000 the annual fee of $130 represents 0.13% of annual revenue. Of the mean annual salary of practitioners in this category ($63,688 per U.S. Census data), the fee represents 0.20%. For physicians and dentists which account for 87% of practitioner registrants, the fee represents 0.12% of annual average salary.

In summary, while the changes in fee structure will affect a substantial number of individual entities that qualify as small businesses, the impact will be minimal when evaluated as a percentage of average annual sales, revenue or income. Consequently, this rule does not create a significant adverse effect on a substantial number of small entities. In addition, the rule is not a discretionary action but rather responds to a statutory mandate to fully fund the costs of the Diversion Control Program through registrant fees.

VII. Registration Fee

A. Effective Date of New Fee Structure

Based on the methodology described in section V–D of this rulemaking and current calculations, to recover the full costs of the DCP as required by law, DEA plans to incrementally raise the fees in accordance the fee structure summarized in Section V. This fee structure replaces the fee structure proposed in the February 18, 2003 Notice of Proposed Rulemaking.

This fee schedule will go into effect on December 1, 2003. To be as clear as possible about the effective date and to ease processing, this effective date represents the first day of the month following the mandatory 30 days after the publication of the final rule in the **Federal Register**. The new fee schedule will be in effect for all new registration applications postmarked on or after December 1, 2003 and all reregistration applications postmarked on or after December 1, 2003. Registration or reregistration applications postmarked on or after this date must, therefore, include the new fee payment.

Because DEA is required by statute to recover through fees the ''full costs'' of the DCP, DEA will continue to monitor the costs and expenditures of the DCP and will revise the fee structure as necessary. DEA does not expect to revise the fee structure again until Fiscal Year 2006 (to be effective Fiscal Year 2007); however, DEA cannot anticipate events or other catalysts that may necessitate major diversion control initiatives by the DEA in future years.

B. Individual Registrations

Several comments were received relating to the use of individual registrations for practitioners as opposed to clinics or medical facilities. One pharmacist commenter objected to the ability of residents and hospital- and clinic-based physicians to use their employer's registration number instead of being required by DEA to maintain individual registrations. The commenter noted that use of an employer's number leads to confusion among pharmacists when the computer, cross-checking the number against the practitioner's name, indicates that they do not match. The commenter argued that the ability to use employer's registration numbers is

unfair to those who must pay individual registration fees and suggested that before registration fees are increased that DEA require all prescribers of controlled substances to be individually registered. Two commenters noted that it is expensive to license multiple practitioners in a practice and that a fee increase would encourage practitioners to forego licensure of all practitioners especially in large practices. One also noted that it would be beneficial if practitioners could work under an umbrella license for the whole clinic.

The Controlled Substances Act requires that every person who manufactures, distributes or dispenses any controlled substance or who proposes to engage in the manufacture, distribution or dispensing of any controlled substance obtain an annual registration. 21 U.S.C. 822(a)(1) and 822(a)(2). However, the Controlled Substances Act also provides for certain exceptions, including ''an agent or employee of any registered manufacturer, distributor, or dispenser of any controlled substance or list I chemical if such agent or employee is acting in the usual course of his business or employment.'' 21 U.S.C. 822(c)(1).

More specifically, ''an individual practitioner who is an agent or employee of another practitioner (other than a mid-level practitioner) registered to dispense controlled substances'' may be exempted from securing his or her own registration but may ''when acting in the normal course of business or employment, administer or dispense (other than by issuance of prescription) controlled substances if and to the extent that such individual practitioner is authorized or permitted to do so by the jurisdiction in which he or she practices, under the registration of the employer or principal practitioner in lieu of being registered him/herself.'' 21 CFR 1301.22. That is, within a group practice, for example, one DEA-registered physician may take the responsibility for ordering a stock of controlled substances from which other physicians in the practice could dispense. However, only the DEA-registered physician would be authorized to issue prescriptions for controlled substances. That is, prescriptions written under a particular DEA number may *only* be written by the physician possessing that registration number.

Additionally, an individual practitioner who is an agent or employee of a hospital or other institution also may administer, dispense, or prescribe controlled substances under the registration of the hospital or other institution which is registered in lieu of being registered him/herself (much like a pharmacist operates under the pharmacy's DEA registration). However, such registration is permissible only if: (1) Such dispensing, administering or prescribing is done in the usual course of his/her professional practice; (2) Such individual practitioner is authorized or permitted to do so by the jurisdiction in which he/she is practicing; (3) The hospital or other institution by which he/she is employed has verified that the individual practitioner is so permitted to dispense, administer, or prescribe drugs within the jurisdiction; (4) Such individual practitioner is acting only within the scope of his/her employment in the hospital or institution; (5) The hospital or other institution authorizes the individual practitioner to administer, dispense or prescribe under the hospital registration and designates a specific internal code number for each individual practitioner so authorized; and (6) A current list of internal codes and the corresponding individual practitioners is kept by the hospital or other institution and is made available at all times to other registrants and law enforcement agencies upon request for the purpose of verifying the authority of the prescribing individual practitioner (21 CFR 1301.22). Other registrants would include pharmacies wishing to verify the identity and authority of individual practitioners to prescribe controlled substances. Note, state laws differ with regard to clinic registration and the use of ''umbrella'' registration numbers for employees of such clinics.

A separate registration is required for each principal place of business or professional practice at one general physical location where controlled substances are manufactured, distributed, imported, exported, or dispensed by a person (21 U.S.C. 822(e)).

C. Allocation of Fee Based on Usage

Four commenters raised issues related to allocation of the registration fee according to usage of controlled substances. Three commenters wrote that, because veterinarians use a limited amount of controlled substances, they should not be expected to be equal partners with other practitioners in funding the DCP. Another commenter stated that, as staff write only 12 controlled substances prescriptions per year, the fee increase would dramatically increase the cost of each of these prescriptions per unit.

The Controlled Substances Act mandates that ''every person'' who manufactures, distributes or dispenses any controlled substance or who proposes to engage in the manufacture, distribution or dispensing of any controlled substance obtain an annual registration (21 U.S.C. 822(a)(1) and 822(a)(2)). This statute mandates such registration irrespective of the extent such persons handle controlled substances. Accordingly, DEA may not alter the fee structure to account for the extent to which registrants handle controlled substances.

VIII. Enforcement of Controlled Substances Act

Several commenters expressed concern that Internet pharmaceutical companies selling veterinary products at discounted prices are undermining veterinarian revenue, with one commenter alleging that Internet and catalog pharmacies sell prescription medications directly to consumers without a prescription from a veterinarian. Three commenters wrote that it is ''not in my profession['s] best interest to pay such exuberant fees * * * while the internet companies undercut the veterinarian.'' Another commenter stated that Internet pharmacies selling controlled substances to consumers without a prescription should be fined severely.

The mission of the Diversion Control Program, as outlined above, is to prevent the diversion of licit controlled substances in conformance with the Controlled Substances Act. All manufacturers, distributors and dispensers of controlled substances are required to obtain a registration with the DEA (21 U.S.C. 822(a)(1) and 822(a)(2)). This requirement includes Internet-based pharmaceutical companies that dispense controlled substances. No dispenser, including Internet-based companies, is permitted to dispense controlled substances without the prescription of a registered physician or other appropriate practitioner. DEA investigates and prosecutes violations of the Controlled Substances Act, including the dispensing of controlled substances without a legal prescription from an authorized and registered practitioner.

Four commenters, three from the same institution, objected to the ability of Internet pharmaceutical companies to sell veterinary products directly to consumers thus affecting sales directly through the veterinary clinics. Commenters expressed concern that clients were purchasing veterinary pharmaceutical supplies through the Internet companies when veterinarians ''must write prescriptions,'' thus eroding pharmaceutical sales by veterinarians and undermining the

veterinarian-client relationship. One commenter also alleged that Internet pharmacies are selling pharmaceuticals without prescriptions from authorized practitioners. Three commenters from the same institution suggested that the DEA tax the Internet drug companies to fund the DCP and leave the current controlled substance handlers fees at the same level.

DEA assures the commenters that any violations of the Controlled Substances Act, including the unauthorized dispensing of controlled substances, are subject to prosecution to the fullest extent of the law. Over the past several years, DEA has undertaken a number of concerted initiatives to control and prevent the diversion of licit controlled substances over the Internet, with the number of diversion arrests more than doubling between Fiscal Year 1995 and Fiscal Year 2000. DEA's diversion control actions do not cover legal commerce transactions such as the legal dispensing of controlled substances through Internet sites or the sale of non-controlled substances (such as other veterinary products) which is outside the purview of the DEA. DEA also notes that Internet pharmaceutical companies, like other dispensers of controlled substances, must register with the DEA in order to handle controlled substances and as such already pay a registration fee like other registered dispensers.

IX. Miscellaneous Issues

A. Mandatory $15 Million Transfer to U.S. Treasury

One commenter objected to registrant fees supporting the mandatory transfer of $15 million to the U.S. Treasury, noting that this burden should not be placed on registrants and requesting that DEA petition Congress to appropriate the required $15 million, so that all fee funds are used to support DCP activities.

DEA is required by the Appropriations Act of 1993 to transfer the first $15 million of fee revenue to the General Fund of the Treasury each year (21 U.S.C. 886a(1)). Calculation of the fees, therefore, must account for this mandated transfer. That is, DEA has no discretion in that matter, and the fees collected by DEA must represent the total amount necessary to ''fully fund'' the DCP by law *plus* an additional $15 million. For the period of Fiscal Year 1993 through Fiscal Year 1998, Congress appropriated an additional $15 million to offset the transfer requirement (a total infusion to the DDCFA of $90 million). However, beginning in Fiscal Year 1999, Congress discontinued this additional appropriation, and the additional $15 million became an additional net expense to the DCP at that time. Congress has not agreed to appropriate the additional $15 million towards the mandatory transfer since that time.

B. Alternative Funding Sources for DCP

Seven commenters raised the issue of finding alternative sources of funding for the DCP to replace the registration fees, including congressional funding and collecting fees from other non-registrant entities (*e.g.*, health insurance companies). As has been detailed above, DEA's authority to charge registration fees to support the DCP derives from three statutory provisions. Of these provisions, the Appropriations Act of 1993 specifically mandates that DEA collect through fees an amount sufficient to ensure the recovery of the ''*full costs*'' (emphasis added) of the DCP (21 U.S.C. 886(a)(3)). That is, DEA is required by statute to fully fund DCP expenses *through registration fees.* For the period of Fiscal Year 1993 through Fiscal Year 1998, Congress appropriated an additional $15 million to the DDCFA to offset the annual mandatory $15 million transfer to the U.S. Treasury described in the previous section. Such appropriations were discontinued beginning in Fiscal Year 1999, and the DCP remains entirely funded through registration fees.

C. Clarification of Fee Amount

Certain registrants pay a single fee for a three-year registration period. Such registrants include dispensers (including practitioners, hospitals/clinics, and retail pharmacies) and teaching institutions. Since publication of the February 18, 2003 notice of proposed rulemaking, DEA has finalized a number of other regulatory actions which affect the CFR sections amended by this final rule. On June 24, 2003, DEA finalized regulations regarding the use of central fill pharmacies to fill controlled substances prescriptions on behalf of retail pharmacies (68 FR 37405). This final rule amended 21 CFR 1301.13(e)(1)(iii) to add ''central fill pharmacy'' as a business activity under dispensing (effective July 24, 2003). Consequently, central fill pharmacies are subject to the same fee as all other dispensers, including pharmacies and teaching institutions. Effective with this rulemaking, the registration/reregistration fee for dispensers, including central fill pharmacies, and teaching institutions is $390 for a three-year period.

Because other categories of registrants secure a registration on an annual basis, much of the discussion in this rulemaking addressed the value of annual registration. In such discussions, DEA often referred to an annual value of $130 which is one-third of $390.

The annual registration and reregistration fee for researchers, narcotic treatment programs (including compounders), effective with this rulemaking, is $130. These categories of registrants obtain a registration and pay the associated fee on an annual basis.

This rulemaking also establishes new annual registration/reregistration fee amounts for manufacturers of $1,625, for distributors of $813, for importers of $813, and for exporters of $813. Reverse distributors are subject to the same annual fee of $813 as distributors as a result of an interim rule published by DEA on July 11, 2003 defining ''reverse distributor'' and establishing reverse distributor as a new category of registration. (68 FR 41222). This interim rule amended 21 CFR 1301.13 by redesignating paragraph (e)(1)(iii) which contained dispensing activities as paragraph (e)(1)(iv) and adding a new paragraph (e)(1)(iii) ''reverse distributors''. In its February 18, 2003 **Federal Register** notice proposing new registration and reregistration application fees, DEA inadvertently included language in the regulatory text regarding fees to be assessed to reverse distributors (referred to as ''disposers'' in the proposed rulemaking), although regulations establishing reverse distributor as a new registration category had not yet been established. As regulations establishing reverse distributors as a new category of registration have now been established, the fees included in this final rule are now accurate and apply as delineated above to this category of registrants. In its February 18, 2003 proposed rule DEA also inadvertently assigned an incorrect annual fee of $131 to disposers. As described above, reverse distributors or disposers, like other distributors, are subject to an annual fee of $813.

Regulatory Analyses

Regulatory Flexibility Act

The Deputy Assistant Administrator hereby certifies that this rulemaking has been drafted in accordance with the Regulatory Flexibility Act (5 U.S.C. 605(b)), has reviewed this regulation, and by approving it certifies that this regulation will not have a significant economic impact on a substantial number of small entities. DEA recognizes that this regulation will have a financial effect on a substantial number of registrants with the increase in fees; however, DEA believes that, based on the length of time between fee

adjustment, the program growth and cost increases, and the overall size of the increase in fees, the change in fees is not significant, and the economic impact of the fees on individual registrants is not significant. The fee represents from 0.21% to as little as 0.01% of average annual sales (or income) for registrants qualifying as small businesses. Moreover, the fees have not been changed in ten years, and DEA is legally mandated to collect fees to cover the full costs of the Diversion Control Program. The appropriations process was used to determine the budget on which the fees are based. The increase in fees after ten years covers both inflation and enhancements to address additional responsibilities assumed by the Diversion Control Program.

In considering options for collecting the full costs of the Diversion Control Program as mandated by law (21 U.S.C. 886a(3)), DEA considered several alternatives to the approach used in this regulation. One alternative would be to reset the fee each year for each category of registrant according to the budget authority. Another alternative would be to set a different fee for each fiscal year. Commenters suggested both of these approaches. DEA determined that both of these options would cause unnecessary confusion with fee changes each year and would impose greater administrative and financial burdens on DEA and registrants than the approach used in this regulation. Moreover, resetting the fee each year, for example, would unfairly affect practitioners differently depending on their registration renewal year; some practitioners would pay more than others. Using actual budget authority figures instead of estimated budget authority figures, as used in this rulemaking, would not give registrants sufficient notice as to fee changes. Doing so also could result in DEA not collecting the full costs of the DCP as required by law in a timely manner. In calculating the fees contained in this rule, DEA used estimated budget authorities based on expected inflation and program enhancements as is standard government practice for forecasting future budgets.

Executive Order 12866

The Deputy Assistant Administrator certifies that this rulemaking has been drafted in accordance with the principles in Executive Order 12866 Section 1(b). This action has been reviewed by the Office of Management and Budget.

Executive Order 12988

This regulation meets the applicable standards set forth in Sections 3(a) and 3(b)(2) of Executive Order 12988 Civil Justice Reform.

Executive Order 13132

This rulemaking does not preempt or modify any provision of state law; nor does it impose enforcement responsibilities on any state; nor does it diminish the power of any state to enforce its own laws. Accordingly, this rulemaking does not have federalism implications warranting the application of Executive Order 13132.

Unfunded Mandates Reform Act of 1995

This rule will not result in the expenditure by State, local, and tribal governments, in the aggregate of $100,000,000 or more in any one year, and will not significantly or uniquely affect small governments. While it will affect the private sector in excess of $100,000,000 per year, the effect on individual entities is minimal. The majority of the affected entities will pay $130 per year (or $390 for a three-year registration period). Moreover, this rule is promulgated in compliance with Congressional mandate that the full cost of operating the DCP be collected through registrant fees as stipulated in the 1993 Departments of Commerce, Justice, and State, the Judiciary, and Related Agencies Appropriations Act (Pub. L. 102–395) and codified in 21 U.S.C. 886a(3). Detailed estimates and analyses, including specific fee amounts for individual registrants, are included in the preamble text.

Small Business Regulatory Enforcement Fairness Act of 1996

This rule is not a major rule as defined by Section 804 of the Small Business Regulatory Enforcement Fairness Act of 1996. The net effect of the fee changes captured in this rulemaking on the economy will be less than $100,000,000 and will not result in a major increase in costs or prices or cause significant adverse effects on competition, employment, investment, productivity, innovation, or on the ability of United States-based companies to compete with foreign-based companies in domestic and export markets. This rule is not a discretionary action but rather responds to the Congressional mandate that the full operating costs of the DCP be collected through registrant fees as described above. The individual effect on small business registrants is minimal ranging from $130 to $1,625 per year with the majority of affected registrants paying an annual fee of $130 (or $390 for three years). As discussed in detail in the preamble, the fee represents less than 0.21% of annual sales or income for the smallest categories of registrants qualifying as small businesses according to Small Business Administration definitions.

List of Subjects in 21 CFR Part 1301

Administrative practice and procedure, Drug traffic control, Security measures.

■ For the reasons set out above, 21 CFR part 1301 is amended as follows:

PART 1301—[AMENDED]

■ 1. The authority citation for part 1301 continues to read as follows:

Authority: 21 U.S.C. 821, 822, 823, 824, 871(b), 875, 877.

■ 2. Section 1301.13 is amended by revising paragraph (e)(1) to read as follows:

§ 1301.13 Application for registration; time for application; expiration date; registration for independent activities; application forms, fees, contents and signature; coincident activities.

* * * * *

(e) * * *

(1)

Business activity	Controlled substances	DEA application forms	Application fee ($)	Registration period (years)	Coincident activities allowed
(i) Manufacturing	Schedules I–V	New—225 Renewal—225a	1,625 1,625	1	Schedules I–V: May distribute that substance or class for which registration was issued; may not distribute or dispose any substance or class for which not registered. Schedules II–V: except a person registered to dispose of any controlled substance may conduct chemical analysis and preclinical research (including quality control analysis) with substances listed in those schedules for which authorization as a mfg. Was issued.
(ii) Distributing	Schedules I–V	New—225 Renewal—225a	813 813	1	
(iii) Reverse distributing.	Schedules I–V	New—225 Renewal 225a	813 813	1	
(iv) Dispensing or instructing (includes Practitioner, Hospital/Clinic, Retail Pharmacy, Central Fill Pharmacy, Teaching Institution).	Schedules II–V	New—224 Renewal—224a	390 390	3	May conduct research and instructional activities with those substances for which registration was granted, except that a mid-level practitioner may conduct such research only to the extent expressly authorized under state statute. A pharmacist may manufacture an aqueous or oleaginous solution or solid dosage form containing a narcotic controlled substance in Schedule II–V in a proportion not exceeding 20% of the complete solution, compound or mixture. A retail pharmacy may perform central fill pharmacy activities.
(v) Research	Schedule I	New—225 Renewal—225a	130 130	1	A researcher may manufacture or import the basic class of substance or substances for which registration was issued, provided that such manufacture or import is set forth in the protocol required in Section 1301.18 and to distribute such class to persons registered or authorized to conduct research with such class of substance or registered or authorized to conduct chemical analysis with controlled substances.
(vi) Research	Schedules II–V	New—225 Renewal—225a	130 130	1	May conduct chemical analysis with controlled substances in those schedules for which registration was issued; manufacture such substances if and to the extent that such manufacture is set forth in a statement filed with the application for registration or reregistration and provided that the manufacture is not for the purposes of dosage form development; import such substances for research purposes; distribute such substances to persons registered or authorized to conduct chemical analysis, instructional activities or research with such substances, and to persons exempted from registration pursuant to Section 1301.24; and conduct instructional activities with controlled substances.
(vii) Narcotic Treatment Program (including compounder).	Narcotic Drugs in Schedules II–V.	New—363 Renewal 363a	130 130	1	
(viii) Importing	Schedules I–V	New—225 Renewal—225a	813 813	1	May distribute that substance or class for which registration was issued; may not distribute any substance or class for which not registered.
(ix) Exporting	Schedules I–V	New—225 Renewal—225a	813 813	1	

Business activity	Controlled substances	DEA application forms	Application fee ($)	Registration period (years)	Coincident activities allowed
(x) Chemical Analysis	Schedules I–V	New—225 ..... Renewal—225a	130 130	1	May manufacture and import controlled substances for analytical or instructional activities; may distribute such substances to persons registered or authorized to conduct chemical analysis, instructional activities, or research with such substances and to persons exempted from registration pursuant to section 1301.24; may export such substances to persons in other countries performing chemical analysis or enforcing laws related to controlled substances or drugs in those countries; and may conduct instructional activities with controlled substances.

* * * * *

Dated: October 7, 2003.

Laura M. Nagel,

Deputy Assistant Administrator, Office of Diversion Control.

[FR Doc. 03–25817 Filed 10–9–03; 8:45 am]

BILLING CODE 4410–09–P

DEPARTMENT OF THE TREASURY

Alcohol and Tobacco Tax and Trade Bureau

27 CFR Part 73

[T.D. TTB–5; Notice No. 5]

RIN 1513–AA61

Electronic Signatures; Electronic Submission of Forms (2000R–458P)

AGENCY: Alcohol and Tobacco Tax and Trade Bureau (TTB), Treasury.

ACTION: Treasury decision, final rule.

SUMMARY: The Alcohol and Tobacco Tax and Trade Bureau (TTB) amends its regulations to permit industry members to use electronic technology to reduce the need for and storage of paper documents. In order to accomplish our goals, we are adding a new part 73 that will allow you to use electronic, rather than handwritten, signatures to sign certain forms, and to submit certain forms to TTB electronically through a TTB-approved electronic document receiving system.

EFFECTIVE DATE: October 10, 2003.

FOR FURTHER INFORMATION CONTACT: Lisa M. Gesser, Regulations and Procedures Division, Alcohol and Tobacco Tax and Trade Bureau, P.O. Box 128, Morganza, MD 20660; telephone 301–290–1460.

SUPPLEMENTARY INFORMATION:

What Will This Final Rule Do?

This final rule amends the regulations to allow you to:

- Use electronic signatures to sign certain forms you submit to us instead of using traditional handwritten signatures; and
- Submit certain forms to TTB electronically through an electronic document receiving system that we approve.

Why Does TTB Want To Allow You To Submit Certain Forms Electronically?

We believe that by giving you the option to submit certain forms electronically, instead of requiring paper documents, we can:

- Reduce the costs associated with submitting and maintaining large volumes of paper documents;
- Improve the quality and accessibility of data;
- Allow for the faster review and approval of a variety of documents; and
- Allow for a variety of our documents to be available around the clock.

What Is TTB's Authority To Implement These Regulations?

Our authority to implement these regulations comes from:

(1) *Government Paperwork Elimination Act (GPEA).* GPEA was signed into law on October 21, 1998. GPEA directs Federal agencies to provide for the optional use and acceptance of electronic documents and signatures, and electronic recordkeeping, where practical, by October 2003. (*See* Secs. 1702–1710 of Pub. L. 105–277.)

(2) *Internal Revenue Code of 1986 (26 U.S.C.)* The Internal Revenue Code of 1986 authorizes the Secretary of the Treasury to, by regulation, encourage electronic filing, address what constitutes a timely filed electronic document, and develop procedures for the acceptance of signatures in digital or other electronic form. (*See* 26 U.S.C. 6011, 6061, and 7502.)

(3) *Electronic Signatures in Global and National Commerce Act of 2000 (E–SIGN).* E–SIGN provides that no contract, signature, or record relating to a transaction shall be denied legal effect solely because it is in electronic form, nor may a document be denied legal effect solely because an electronic signature or record was used in its formation. E–SIGN applies to documents that are created in a commercial, consumer, or business transaction. It does not cover transactions that are uniquely governmental such as a compliance report. (*See* Public Law 106–229.)

(4) *Office of Management and Budget Circular A–130.* OMB's Circular A–130 requires agencies to employ electronic information collection techniques where such means will reduce the burden on the public, increase efficiency, reduce costs, and help provide better service. (*See* Circular A–130, Para. 8.a.1(k).)

How Does TTB Plan on Implementing Electronic Filing?

We are creating a new part 73 in title 27 CFR, chapter I, entitled ''Electronic Signatures; Electronic Submission of Forms.'' Part 73 explains our overall policy regarding electronic signatures and the electronic submission of certain forms to TTB.

Electronic Signatures

Upon the effective date of this final rule, we recognize electronic signatures executed to certain electronic forms as the full equivalent of, and having the same legal effect as, traditional handwritten signatures executed on paper. We will notify you, by publishing a general notice in the **Federal Register** and on our Web site (*http://*

www.ttb.gov), when you may use electronic signatures to execute certain electronic forms. The general notice will provide you with specific instructions about how to submit and what technology will be acceptable to TTB.

Electronic Submission of Forms to TTB

We are in the process of developing the means to allow you to submit forms electronically. This is a lengthy process; we will need to develop the hardware and software components to accept each different type of form. Once we are able to accept a certain form, we will announce in the **Federal Register** and on our Web site that you may register to submit that form electronically. The announcement will provide you with instructions on how to register.

Will I Still Have To Maintain Paper Copies?

If the regulations require you to maintain certain documents in paper format, you must continue to maintain those documents in paper format even if you submit them to us electronically. Nothing in part 73 alters any other regulatory or statutory requirement that records be maintained in paper format. This part does provide that TTB may publish a general notice in the **Federal Register** authorizing you to maintain certain documents electronically instead of in paper form.

Notice of Proposed Rulemaking

On April 11, 2003, we published a notice of proposed rulemaking, Notice No. 5, in the **Federal Register** (68 FR 17760) to solicit comments regarding our proposal to add the new part 73 to chapter I of title 27. The notice requested comments from interested persons by May 12, 2003.

Comments on Notice of Proposed Rulemaking

We did not receive any comments as a result of Notice No. 5.

Regulatory Analyses and Notices

Paperwork Reduction Act

The provisions of the Paperwork Reduction Act of 1995, 44 U.S.C. Chapter 35, and its implementing regulations, 5 CFR part 1320, do not apply to this rule because there are no new reporting or recordkeeping requirements.

Regulatory Flexibility Act

The Regulatory Flexibility Act, 5 U.S.C. 601 *et seq.*, requires an agency to conduct a regulatory flexibility analysis of any rule that may have a significant economic impact on a substantial number of small entities. We certify that this final rule will not have such an impact because the electronic submission of forms to TTB and the use of electronic signatures are voluntary. This final rule only applies to those people who seek our approval to transmit certain forms electronically to us.

Executive Order 12866

This regulation is not a significant regulatory action as defined by Executive Order 12866. Accordingly, this rule is not subject to the analysis required by this Executive Order.

Executive Order 13132

Executive Order 13132, entitled ''Federalism'' (64 FR 43255, August 10, 1999), requires Federal agencies to ensure ''meaningful and timely input by State and local officials in the development of regulatory policies that have federalism implications.'' This rule does not have federalism implications. This rule will not have substantial direct effects on the States, on the relationship between the national government and the States, or on the distribution of power and responsibilities among the various levels of government. This rule will not require States to accept electronic reports. The effect of this rule will be to provide additional regulatory flexibility to States because States could choose to accept electronic data that would also satisfy our reporting requirements.

Drafting Information

The principal author of this document is Lisa M. Gesser, Regulations and Procedures Division, Alcohol and Tobacco Tax and Trade Bureau.

List of Subjects in 27 CFR Part 73

Electronic signatures, Reporting and recordkeeping requirements.

Authority and Issuance

■ For the reasons set out in the preamble, we amend chapter I of title 27 of the Code of Federal Regulations by adding a new part 73 to read as follows:

PART 73—ELECTRONIC SIGNATURES; ELECTRONIC SUBMISSION OF FORMS

Subpart A—General Provisions

Sec.

Scope

73.1 What does this part do?

Definitions

73.3 What terms must I know to understand this part?

Subpart B—Electronic Signatures

73.10 What does subpart B cover?
73.11 What are the required components and controls for acceptable electronic signatures?
73.12 What security controls must I use for identification codes and passwords?

Subpart C—Electronic Filing of Documents With TTB

73.30 What does subpart C cover?
73.31 May I submit forms electronically to TTB?
73.32 May I electronically sign forms I submit electronically to TTB?
73.33 Am I legally bound by a form I sign electronically?
73.34 When is an electronically submitted form considered timely filed?
73.35 Do I need to keep paper copies of forms I submit to TTB electronically?

Authority: 26 U.S.C. 6011, 6061, 7502; 15 U.S.C. 7001, 7004.

Subpart A—General Provisions

Scope

§ 73.1 What does this part do?

(a) This part provides the conditions under which we will allow you to:

(1) Use electronic signatures or digital signatures executed to electronic forms instead of traditional handwritten signatures executed on paper forms; and

(2) Electronically submit certain forms to TTB.

(b) This part does not require you to submit forms to us electronically.

Definitions

§ 73.3 What terms must I know to understand this part?

You need to know the following terms to understand this part:

27 CFR. Title 27 of the Code of Federal Regulations, chapter I.

Biometrics. A method of verifying an individual's identity based on measurement of the individual's physical feature(s) or repeatable action(s) where those features and/or actions are both unique to that individual and measurable.

Digital signature. An electronic signature based upon cryptographic methods of originator authentication, computed by using a set of rules and a set of parameters such that the identity of the signer and the integrity of the data can be verified. A signer creates a digital signature by using public-key encryption to transform a message digest of an electronic message. If a recipient of the digital signature has an electronic message, message digest function, and the signer's public key, the recipient can verify:

(1) Whether the transformation was accomplished with the private key that

corresponds to the signer's public key; and

(2) Whether the electronic message has been altered since the transformation was made.

Electronic document receiving system. Any set of apparatus, procedures, software, records, or documentation used to receive documents communicated to it via a telecommunications network.

Electronic signature. A computer data compilation of any symbol or series of symbols executed, adopted, or authorized by an individual to be the legally binding equivalent of the individual's handwritten signature, and that:

(1) Identifies and authenticates a particular person as the source of the electronic message; and

(2) Indicates such person's approval of the information contained in the electronic message.

Form(s). The term form(s), when used in this part, includes all documents required by 27 CFR, chapter I, to be submitted to TTB.

Handwritten signature. The scripted name or legal mark of an individual handwritten by that individual and executed or adopted with the present intention to authenticate a writing in a permanent form. The act of signing with a writing or marking instrument such as a pen or stylus is preserved. The scripted name or legal mark, while conventionally applied to paper, may also be applied to other materials or devices that capture the name or mark.

Paper format. A paper document.

TTB. Refers to the Alcohol and Tobacco Tax and Trade Bureau within the Department of the Treasury.

You and I. ''You'' and ''I'' refer to the organization or person who must maintain records or submit documents to TTB to satisfy the requirements of 27 CFR, chapter I.

Subpart B—Electronic Signatures

§ 73.10 What does subpart B cover?

This subpart provides the conditions under which TTB will allow you to use electronic signatures executed to electronic forms instead of traditional handwritten signatures executed on paper forms. Where electronic signatures and their associated electronic forms meet the requirements of this part, TTB will consider the electronic signatures to be the equivalent of full handwritten signatures, initials, and other general signings this chapter requires.

§ 73.11 What are the required components and controls for acceptable electronic signatures?

(a) *Electronic signatures not based on biometrics.* If you use electronic signatures that are not based upon biometrics you must:

(1) Employ at least two distinct identification components such as an identification code and a password;

(2) Use both identification components when executing an electronic signature to an electronic document; and

(3) Ensure that the electronic signature can only be used by the authorized user.

(b) *Electronic signatures based on biometrics.* If you use electronic signatures based upon biometrics, they must be designed to ensure that they cannot be used by anyone other than their genuine owners.

§ 73.12 What security controls must I use for identification codes and passwords?

If you use electronic signatures based upon use of identification codes in combination with passwords, you must employ controls to ensure their security and integrity. These controls must include:

(a) Maintaining the uniqueness of each combined identification code and password, such that no two individuals have the same combination of identification code and password;

(b) Ensuring that identification code and password issuances are periodically checked, recalled, or revised (*e.g.*, to cover such events as password aging);

(c) Following loss management procedures to electronically deauthorize lost, stolen, missing, or otherwise potentially compromised tokens, cards, or other devices that bear or generate identification code or password information, and to issue temporary or permanent replacements using suitable, rigorous controls;

(d) Using transaction safeguards to prevent unauthorized use of passwords and/or identification codes, and to detect and report in an immediate and urgent manner any attempts at their unauthorized use to the system security unit and, as appropriate, to organizational management; and

(e) Initial and periodic testing of devices, such as tokens or cards, that bear or generate identification code or password information to ensure that they function properly and have not been altered in any unauthorized manner.

Subpart C—Electronic Filing of Documents with TTB

§ 73.30 What does subpart C cover?

This subpart provides the conditions under which we will allow you to satisfy certain reporting requirements of this chapter by submitting forms to us electronically.

§ 73.31 May I submit forms electronically to TTB?

Yes; you may submit an electronic form, instead of a paper form, to satisfy any reporting requirement in this chapter, only if:

(a) We have published a notice in the **Federal Register** and on our Web site *(http://www.ttb.gov*) announcing that we are prepared to receive a particular form electronically;

(b) You have registered to do so pursuant to the instructions in a notice published in the **Federal Register** and on our Web site as stated above;

(c) You submit the electronic form to an electronic document receiving system that we have designated for the receipt of that specific form; and

(d) The electronic form bears valid electronic signatures, as provided in subpart B of this part, to the same extent that the paper submission for which it substitutes would bear handwritten signatures.

§ 73.32 May I electronically sign forms I submit electronically to TTB?

You may electronically sign the electronic form you submit to us if:

(a) You have registered with TTB to do so and have certified, prior to the time of such use, that the electronic signatures or digital signatures in your system are intended to be the legally binding equivalent of traditional handwritten signatures;

(b) The electronic or digital signature meets the standards of this part and is authorized by TTB in accordance with this part; and

(c) The electronic or digital signature is sufficiently trustworthy and reliable that the signing party may not repudiate the signature.

§ 73.33 Am I legally bound by a form I sign electronically?

Yes; by electronically signing a form you submit to us, you are agreeing to be legally bound to the same extent as if you applied a traditional handwritten signature on a paper document submitted to satisfy the same reporting requirement. Persons using electronic signatures shall, upon TTB's request, provide additional certification or testimony that a specific electronic signature is the legally binding

equivalent of the signer's handwritten signature.

§ 73.34 When is an electronically submitted form considered timely filed?

If you submit a form to our electronic document receiving system, your report will be considered filed on the date of the electronic postmark given by that system.

§ 73.35 Do I need to keep paper copies of forms I submit to TTB electronically?

Nothing in this part alters any other regulatory or statutory requirement that records be maintained in paper format. If the regulations in this chapter require you to keep paper copies of certain forms, you must continue to do so unless TTB otherwise authorizes you to maintain electronic copies of these documents through a general notice in the **Federal Register** or through a variance.

Dated: May 29, 2003.

Arthur J. Libertucci,

Administrator.

Approved: September 5, 2003.

Timothy E. Skud,

Deputy Assistant Secretary (Tax, Trade, and Tariff Policy).

[FR Doc. 03–25524 Filed 10–9–03; 8:45 am]

BILLING CODE 4810–31–P

DEPARTMENT OF HOMELAND SECURITY

Coast Guard

33 CFR Part 100

[CGD05–03–031]

RIN 1625–AA08

Special Local Regulations for Marine Events; Prospect Bay, Kent Island Narrows, MD

AGENCY: Coast Guard, DHS.

ACTION: Final rule.

SUMMARY: The Coast Guard is establishing permanent special local regulations for the ''Thunder on the Narrows'' boat races, an annual marine event held on the waters of Prospect Bay near Kent Island Narrows, Maryland. These special local regulations are necessary to provide for the safety of life on navigable waters during the event. This action is intended to restrict vessel traffic in portions of Prospect Bay during the event.

DATES: This rule is effective November 10, 2003.

ADDRESSES: Comments and material received from the public, as well as documents indicated in this preamble as being available in the docket, are part of docket CGD05–03–031 and are available for inspection or copying at Commander (oax), Fifth Coast Guard District, 431 Crawford Street, Portsmouth, Virginia 23704–5004, between 9 a.m. and 2 p.m., Monday through Friday, except Federal holidays.

FOR FURTHER INFORMATION CONTACT: S. L. Phillips, Project Manager, Auxiliary and Recreational Boating Safety Branch at (757) 398–6204.

SUPPLEMENTARY INFORMATION:

Regulatory Information

On March 31, 2003, we published a notice of proposed rulemaking (NPRM) entitled ''Special Local Regulations for Marine Events; Prospect Bay, Kent Island Narrows, MD'' in the **Federal Register** (68 FR 15417). We received no letters commenting on the proposed rule. No public hearing was requested, and none was held.

Background and Purpose

Each year on the first Saturday and Sunday of August, the Kent Narrows Racing Association sponsors the ''Thunder on the Narrows'' powerboat races. The event consists of 75 Hydroplanes and Jersey Speed Skiffs racing in heats counter-clockwise around a 1.5-mile oval racecourse on the waters of Prospect Bay, Kent Island Narrows, Maryland. A fleet of approximately 200 spectator vessels normally gathers nearby to view the event. Due to the need for vessel control during the races, vessel traffic will be temporarily restricted to provide for the safety of the spectators, participants and transiting vessels.

Regulatory Evaluation

This rule is not a ''significant regulatory action'' under section 3(f) of Executive Order 12866, Regulatory Planning and Review, and does not require an assessment of potential costs and benefits under section 6(a)(3) of that Order. The Office of Management and Budget has not reviewed it under that Order. It is not ''significant'' under the regulatory policies and procedures of the Department of Homeland Security (DHS).

We expect the economic impact of this rule to be so minimal that a full Regulatory Evaluation under the regulatory policies and procedures of DHS is unnecessary.

Although this regulation will prevent traffic from transiting a portion of Prospect Bay during the event, the effect of this regulation will not be significant due to the limited duration that the regulated area will be in effect and the extensive advance notifications that will be made to the maritime community via the Local Notice to Mariners, marine information broadcasts, and area newspapers, so mariners can adjust their plans accordingly. Additionally, the proposed regulated area has been narrowly tailored to impose the least impact on general navigation yet provide the level of safety deemed necessary. Vessel traffic will be able to transit Prospect Bay and Kent Narrows by navigating around the regulated area.

Small Entities

Under the Regulatory Flexibility Act (5 U.S.C. 601–612), we have considered whether this rule will have a significant economic impact on a substantial number of small entities. The term ''small entities'' comprises small businesses, not-for-profit organizations that are independently owned and operated and are not dominant in their fields, and governmental jurisdictions with populations of less than 50,000.

The Coast Guard certifies under 5 U.S.C. 605 (b) that this rule will not have a significant economic impact on a substantial number of small entities. This rule will affect the following entities, some of which might be small entities: the owners or operators of vessels intending to transit or anchor in a portion of Prospect Bay during the event.

This rule will not have a significant economic impact on a substantial number of small entities for the following reasons. This rule will be in effect for only 2 days each year. Vessel traffic will be able to pass safely around the regulated area. Before the enforcement period, we will issue maritime advisories so mariners can adjust their plans accordingly.

Assistance for Small Entities

Under section 213 (a) of the Small Business Regulatory Enforcement Fairness Act of 1996 (Pub. L. 104–121), we offered to assist small entities in understanding this rule so that they can better evaluate its effects on them and participate in the rulemaking. No assistance was requested and none was provided.

Small businesses may send comments on the actions of Federal employees who enforce, or otherwise determine compliance with, Federal regulations to the Small Business and Agriculture Regulatory Enforcement Ombudsman and the Regional Small Business Regulatory Fairness Boards. The Ombudsman evaluates these actions annually and rates each agency's responsiveness to small business. If you wish to comment on actions by

employees of the Coast Guard, call 1–888–REG–FAIR (1–888–734–3247).

Collection of Information

This rule calls for no new collection of information under the Paperwork Reduction Act of 1995 (44 U.S.C. 3501–3520).

Federalism

A rule has implications for federalism under Executive Order 13132, Federalism, if it has a substantial direct effect on State or local governments and would either preempt State law or impose a substantial direct cost of compliance on them. We have analyzed this rule under that Order and have determined that it does not have implications for federalism.

Unfunded Mandates Reform Act

The Unfunded Mandates Reform Act of 1995 (2 U.S.C. 1531–1538) requires Federal agencies to assess the effects of their discretionary regulatory actions. In particular, the Act addresses actions that may result in the expenditure by a State, local, or tribal government, in the aggregate, or by the private sector of $100,000,000 or more in any one year. Though this rule will not result in such an expenditure, we do discuss the effects of this rule elsewhere in this preamble.

Taking of Private Property

This rule will not effect a taking of private property or otherwise have taking implications under Executive Order 12630, Governmental Actions and Interference with Constitutionally Protected Property Rights.

Civil Justice Reform

This rule meets applicable standards in sections 3 (a) and 3 (b) (2) of Executive Order 12988, Civil Justice Reform, to minimize litigation, eliminate ambiguity, and reduce burden.

Protection of Children

We have analyzed this rule under Executive Order 13045, Protection of Children from Environmental Health Risks and Safety Risks. This rule is not an economically significant rule and would not create an environmental risk to health or risk to safety that might disproportionately affect children.

Indian Tribal Governments

This rule does not have tribal implications under Executive Order 13175, Consultation and Coordination with Indian Tribal Governments, because it does not have a substantial direct effect on one or more Indian tribes, on the relationship between the Federal Government and Indian tribes, or on the distribution of power and responsibilities between the Federal Government and Indian tribes.

Energy Effects

We have analyzed this rule under Executive Order 13211, Actions Concerning Regulations That Significantly Affect Energy Supply, Distribution, or Use. We have determined that it is not a ''significant energy action'' under that order because it is not a ''significant regulatory action'' under Executive Order 12866 and is not likely to have a significant adverse effect on the supply, distribution, or use of energy. The Administrator of the Office of Information and Regulatory Affairs has not designated it as a significant energy action. Therefore, it does not require a Statement of Energy Effects under Executive Order 13211.

Environment

We prepared an ''Environmental Assessment'' in accordance with Commandant Instruction M16475.1D, and determined that this rule will not significantly affect the quality of the human environment. The ''Environmental Assessment'' and ''Finding of No Significant Impact'' is available in the docket where indicated under **ADDRESSES.**

List of Subjects in 33 CFR Part 100

Marine safety, Navigation (water), Reporting and recordkeeping requirements, Waterways.

■ For the reasons discussed in the preamble, the Coast Guard amends 33 CFR Part 100 as follows:

PART 100—SAFETY OF LIFE ON NAVIGABLE WATERS

■ 1. The authority citation for part 100 continues to read as follows:

Authority: 33 U.S.C. 1233 through 1236; Department of Homeland Security Delegation No. 0170.1, 33 CFR 100.35.

■ 2. Add § 100.530 to read as follows:

§ 100.530 Prospect Bay, Kent Island Narrows, Maryland.

(a) *Regulated Area.* The regulated area includes all waters of Prospect Bay enclosed by the following points:

Latitude	*Longitude*
38°57′52.0″ N	076°14′48.0″ W, to
38°58′02.0″ N	076°15′05.0″ W, to
38°57′38.0″ N	076°15′29.0″ W, to
38°57′28.0″ N	076°15′23.0″ W, to
38°57′52.0″ N	076°14′48.0″ W.

All coordinates reference Datum NAD 1983.

(b) *Definitions.* The following definitions apply to this section:

Coast Guard Patrol Commander. The Coast Guard Patrol Commander is a commissioned, warrant, or petty officer of the Coast Guard who has been designated by the Commander, Coast Guard Activities Baltimore.

Official Patrol. The Official Patrol is any vessel assigned or approved by Commander, Coast Guard Activities Baltimore with a commissioned, warrant, or petty officer on board and displaying a Coast Guard ensign.

(c) *Special local regulations:*

(1) Except for persons or vessels authorized by the Coast Guard Patrol Commander, no person or vessel may enter or remain in the regulated area.

(2) The operator of any vessel in the regulated area shall:

(i) Stop the vessel immediately when directed to do so by any official patrol, including any commissioned, warrant, or petty officer on board a vessel displaying a Coast Guard ensign.

(ii) Proceed as directed by any official patrol, including any commissioned, warrant, or petty officer on board a vessel displaying a Coast Guard ensign.

(d) *Enforcement period.* This section will be enforced annually from 9:30 a.m. to 6:30 p.m. on the first Saturday and Sunday in August. Notice of the enforcement period will be given via Marine Safety Radio Broadcast on VHF-FM marine band radio, Channel 22 (157.1 MHz).

Dated: September 17, 2003.

Sally Brice-O'Hara,

Rear Admiral, U.S. Coast Guard, Commander, Fifth Coast Guard District.

[FR Doc. 03–25747 Filed 10–9–03; 8:45 am]

BILLING CODE 4910–15–P

DEPARTMENT OF HOMELAND SECURITY

Coast Guard

33 CFR Part 165

[CGD13–03–028]

RIN 2115–AA00

Safety Zone: Fort Vancouver Celebrate America Fireworks Display

AGENCY: Coast Guard, DHS.

ACTION: Temporary final rule.

SUMMARY: The Coast Guard is establishing a safety zone on the Columbia River during a fireworks display. The Captain of the Port, Portland, is taking this action to safeguard watercraft and their occupants from safety hazards associated with the

fireworks display. Entry into this safety zone is prohibited unless authorized by the Captain of the Port.

DATES: This rule is effective from 8:30 p.m. (PDT) to 9:30 p.m. (PDT) on October 12, 2003.

ADDRESSES: Documents indicated in this preamble as being available in the docket are part of docket [CGD 13–03–028] and are available for inspection or copying at the U.S. Coast Guard MSO/Group Portland, 6767 N. Basin Ave, Portland, Oregon 97217 between 7 a.m. and 4 p.m., Monday through Friday, except Federal holidays.

FOR FURTHER INFORMATION CONTACT: LTJG Ryan Wagner, c/o Captain of the Port Portland, 6767 N. Basin Ave, Portland, OR 97217 at 503–240–9370.

SUPPLEMENTARY INFORMATION:

Regulatory Information

We did not publish a notice of proposed rulemaking (NPRM) for this regulation. Under 5 U.S.C. 553(b)(B), the Coast Guard finds that good cause exists for not publishing an NPRM. A Final Rule, which established safety zones around fireworks displays for the Captain of the Port Portland area of responsibility, was recently published in the **Federal Register** (CGD13–03–008, 33 CFR 165.1315, 68 FR 32366, May 30, 2003). An amendment cannot successfully be made to 33 CFR 165.1315 in time to ensure the safety of vessels and spectators gathering in the vicinity of this fireworks display. The Coast Guard intends to amend 33 CFR 165.1315 using normal rule-making procedures in the near future by adding this safety zone to that regulation.

Under 5 U.S.C. 553(d)(3), the Coast Guard finds that good cause exists for making this rule effective less than 30 days after publication in the **Federal Register**. Waiting 30 days for this rule to be effective is contrary to public interest. Due to the complex planning and coordination of the event, the event sponsor was unable to provide the Coast Guard with notice of details of the event in time to allow for notice and comment and a 30-day waiting period prior to the effective date after publication. Because immediate action is necessary to ensure the safety of vessels and spectators gathered in the vicinity of the fireworks launching barge it is in the public interest to make the rule effective less than 30 days after publication in the **Federal Register**.

Background and Purpose

The Coast Guard is establishing a temporary safety zone regulation to allow for a safe fireworks display. This safety zone will be in effect from 8:30 p.m. (PDT) to 9:30 p.m. (PDT) on October 12, 2003 located on the Columbia River. This event will result in a large number of vessels congregating near the fireworks launching area. This safety zone is needed to provide for the safety of spectators and their watercraft from the inherent safety hazards associated with fireworks displays. Without providing an adequate safety zone, the public could be exposed to falling burning debris and would likely be within the blast range should a catastrophic accident occur on the launching barge. This safety zone will be enforced by representatives of the Captain of the Port, Portland, Oregon. The Captain of the Port may be assisted by other federal and local agencies.

Discussion of Rule

This rule, for safety concerns, will control vessel movements in a regulated area surrounding a fireworks launching barge. Entry into this zone is prohibited unless authorized by the Captain of the Port, Portland or his designated representative. Coast Guard personnel will enforce this safety zone. The Captain of the Port may be assisted by other federal and local agencies.

Regulatory Evaluation

This rule is not a ''significant regulatory action'' under section 3(f) of Executive Order 12866, Regulatory Planning and Review, and does not require an assessment of potential costs and benefits under section 6(a)(3) of that Order. The Office of Management and Budget has not reviewed it under that Order. It is not ''significant'' under the regulatory policies and procedures of the Department of Homeland Security. The Coast Guard expects the economic impact of this rule to be so minimal that a full regulatory evaluation under the regulatory policies and procedures of DHS is unnecessary.

Small Entities

Under the Regulatory Flexibility Act (5 U.S.C. 601–612), we considered whether this rule would have a significant economic impact on a substantial number of small entities. The term ''small entities'' include small businesses, not-for-profit organizations that are independently owned and operated and are not dominant in their fields, and governmental jurisdictions with populations of less than 50,000.

The Coast Guard certifies under 5 U.S.C. 605(b) that this rule would not have a significant economic impact on a substantial number of small entities. This rule will affect the following entities, some of which may be small entities: The owners or operators of vessels intending to transit the designated area at the corresponding time as drafted in this rule. This safety zone will not have a significant economic impact on a substantial number of small entities for the following reasons. This rule will be in effect for one hour in the evening when vessel traffic is low. Traffic will be allowed to pass through the zone with the permission of the Captain of the Port or his designated representatives on scene, if safe to do so. Because the impacts of this proposal are expected to be so minimal, the Coast Guard certifies under 5 U.S.C. 605(b) of the Regulatory Flexibility Act (5 U.S.C. 601–612) that this final rule will not have a significant economic impact on a substantial number of small entities.

If you think that your business, organization, or governmental jurisdiction qualifies as a small entity that this rule would have a significant economic impact on it, please submit a comment (*see* **ADDRESSES**) explaining why you think it qualifies and how and to what degree this rule would economically affect it.

Assistance for Small Entities

Under section 213(a) of the Small Business Regulatory Enforcement Fairness Act of 1996 (Pub. L. 104–121), we want to assist small entities in understanding the rule so that they can better evaluate its effects on them and participate in the rulemaking process. If the rule will affect your small business, organization or governmental jurisdiction and you have questions concerning its provisions or options for compliance, please contact the person listed in the **FOR FURTHER INFORMATION CONTACT** section. Small businesses may send comments on the actions of Federal employees who enforce or otherwise determine compliance with Federal regulations to the Small Business and Agriculture Regulatory Enforcement Ombudsman and the Regional Small Business Regulatory Fairness Boards. The Ombudsman evaluates these actions annually and rates each agency's responsiveness to small business. If you wish to comment on actions by employees of the Coast Guard, call 1–888–REG–FAIR (1–888–734–3247).

Collection of Information

This rule calls for no new collection of information requirements under the Paperwork Reduction Act of 1995 (44 U.S.C. 3501–3520).

Federalism

A rule has implications for federalism under Executive Order 13132, Federalism, if it has a substantial direct effect on State or local governments and would either preempt State law or impose a substantial direct cost of compliance on them. We have analyzed this rule under that Order and have determined that it does not have implications for federalism.

Unfunded Mandates Reform Act

The Unfunded Mandates Reform Act of 1995 (2 U.S.C. 1531–1538) requires Federal agencies to assess the effects of their regulatory actions not specifically required by law. In particular, the Act addresses actions that may result in the expenditure by a State, local, or tribal government, in the aggregate, or by the private sector of $100,000,000 or more in any one year. Although this rule would not result in such an expenditure, we do discuss the effects of this rule elsewhere in this preamble.

Taking of Private Property

This rule will not effect a taking of private property or otherwise have taking implications under Executive Order 12630, Governmental Actions and Interference With Constitutionally Protected Property Rights.

Civil Justice Reform

This rule meets applicable standards in sections 3(a) and 3(b)(2) of Executive Order 12988, Civil Justice Reform, to minimize litigation, eliminate ambiguity, and reduce burden.

Protection of Children

We have analyzed this rule under Executive Order 13045, Protection of Children from Environmental Health Risks and Safety Risks. This rule is not an economically significant rule and would not create an environmental risk to health or risk to safety that might disproportionately affect children.

Indian Tribal Governments

This rule does not have tribal implications under Executive Order 13175, Consultation and Coordination with Indian Tribal Governments, because it would not have a substantial direct effect on one or more Indian tribes, on the relationship between the Federal Government and Indian tribes, or on the distribution of power and responsibilities between the Federal Government and Indian tribes.

Energy Effects

We have analyzed this rule under Executive Order 13211, Actions Concerning Regulations That Significantly Affect Energy Supply, Distribution, or Use. We have determined that it is not a ''significant energy action'' under that order because it is not a ''significant regulatory action'' under Executive Order 12866 and is not likely to have a significant adverse effect on the supply, distribution, or use of energy. It has not been designated by the Administrator of the Office of Information and Regulatory Affairs as a significant energy action. Therefore, it does not require a Statement of Energy Effects under Executive Order 13211.

Environment

The Coast Guard has considered the environmental impact of this action and has concluded that under figure 2–1, paragraph 34(g) of Commandant Instruction M16475.1D, this rule is categorically excluded from further environmental documentation. A final ''Environmental Analysis Checklist'' and a final ''Categorical Exclusion Determination'' is available in the docket we have indicated under **ADDRESSES.**

List of Subjects in 33 CFR Part 165

Harbors, Marine safety, Navigation (water), Reporting and recordkeeping requirements, Security measures, Waterways.

■ For the reasons discussed in the preamble, the Coast Guard amends 33 CFR part 165 as follows:

PART 165—REGULATED NAVIGATION AREAS AND LIMITED ACCESS AREAS

■ 1. The authority citation for part 165 continues to read as follows:

Authority: 33 U.S.C. 1226, 1231; 46 U.S.C. Chapter 701; 50 U.S.C. 191; 33 CFR 1.05–1(g), 6.04–1, 6.04–6, and 160.5; Pub. L. 107–295, 116 Stat. 2064; Department of Homeland Security Delegation No. 0170.1.

■ 2. A temporary § 165.T13–018 is added to read as follows:

§ 165.T13–018 Safety Zone: Fort Vancouver Celebrate America Fireworks Display, Portland, OR.

(a) The following area is a safety zone:

(1) *Description.* Fort Vancouver Celebrate America Fireworks Display, Portland, OR.

(2) *Location.* All waters of the Columbia River bounded by a line commencing at the southern base of the Interstate 5 highway bridge at latitude 45° 36′ 51.1″ N, longitude 122° 40′ 38.2″ W; thence north along the Interstate 5 highway bridge to latitude 45° 37′ 3″ N, longitude 122° 40′ 31″ W; thence east along the Columbia River to latitude 45° 36′ 54.5″ N, longitude 122° 40′ 2″ W; thence south to the Oregon shoreline at latitude 45° 36′ 40.7″ N, longitude 122° 40′ 12.7″ W; thence west along the Oregon shoreline to the point of origin.

(b) *Enforcement period.* October 12, 2003 from 8:30 p.m. (PDT) to 9:30 p.m. (PDT).

(c) *Regulations.* In accordance with § 165.23, entry into these zones is prohibited unless authorized by the Coast Guard Captain of the Port, Portland or his designated representatives. Section 165.23 also contains other general requirements. Announcement of enforcement periods may be made by the methods described in 33 CFR 165.7, or any other reasonable method.

(d) *Authority.* In addition to 33 U.S.C. 1231, the authority for this section includes 33 U.S.C. 1226.

Dated: September 17, 2003.

Paul D. Jewell,

Captain, Coast Guard, Captain of the Port.

[FR Doc. 03–25681 Filed 10–9–03; 8:45 am]

BILLING CODE 4910–15–P

DEPARTMENT OF HOMELAND SECURITY

Coast Guard

33 CFR Part 165

[COTP Louisville–03–009]

RIN 1625–AA00

Safety Zone; Ohio River, Miles 469.6 to 470.5, Extending 900 Feet from the Ohio Shoreline, Cincinnati, OH

AGENCY: Coast Guard, DHS.

ACTION: Temporary final rule.

SUMMARY: The Coast Guard is establishing a temporary safety zone for all waters of the Ohio River extending 900 feet from the Ohio shoreline beginning at mile marker 469.6 and ending at mile marker 470.5. This zone is necessary to protect participants, spectators and vessels from the potential safety hazards associated with the 2003 Tall Stacks Heritage Festival. Entry into this zone is prohibited unless specifically authorized by the Captain of the Port Louisville or a designated representative.

DATES: This rule is effective from 8 a.m. on October 14, 2003 until 1 p.m. on October 20, 2003.

ADDRESSES: Documents indicated in this preamble as being available in the docket are part of docket [COTP Louisville-03–009] and are available for inspection or copying at Marine Safety Office Louisville, 600 Martin Luther King Junior Place, Room 360, Louisville,

KY 40202–2230, between 8 a.m. and 4 p.m., Monday through Friday, except Federal holidays.

FOR FURTHER INFORMATION CONTACT: Lieutenant (LT) Tom Lake, Marine Safety Office Louisville, Planning Department, at (502) 582–5194.

SUPPLEMENTARY INFORMATION:

Regulatory Information

We did not publish a notice of proposed rulemaking (NPRM) for this regulation. Under 5 U.S.C. 553(b)(B), the Coast Guard finds that good cause exists for not publishing an NPRM, and under 5 U.S.C. 553(d)(3), good cause exists for making this rule effective less than 30 days after publication in the **Federal Register**. Publishing an NPRM and delaying its effective date would be contrary to public interest since immediate action is needed to protect participants, vessels and mariners from the hazards associated with the 2003 Tall Stacks Heritage Festival.

Background and Purpose

The Captain of the Port Louisville is establishing a safety zone for all waters of the Ohio River extending 900 feet from Ohio shoreline beginning at mile marker 469.6 and ending at mile marker 470.5. The event requires a safety zone due to the number of commercial vessels that regularly transit the area, the potential for a large spectator vessel turnout and the need to control vessel traffic in the vicinity of the 2003 Tall Stacks Heritage Festival. 17 paddle wheel vessels will be moored in this zone. Over 25,000 waterborne spectators are expected to be in the vicinity of these paddle wheel vessels at any one time. Unauthorized access by a recreational or commercial vessel could create a hazardous condition that would endanger the safety of participants or spectators. Entry into this zone is prohibited unless specifically authorized by the Captain of the Port Louisville or a designated representative.

Regulatory Evaluation

This rule is not a ''significant regulatory action'' under section 3(f) of Executive Order 12866, Regulatory Planning and Review, and does not require an assessment of potential costs and benefits under section 6(a)(3) of that Order. The Office of Management and Budget has not reviewed it under that Order. It is not ''significant'' under the regulatory policies and procedures of the Department of Homeland Security (DHS).

This rule will only be in effect for a short period of time and notifications to the maritime community will be made through broadcast notice to mariners. The impacts on routine navigation are expected to be minimal as this safety zone will only extend 900 feet from the Ohio shoreline. Vessels intending to transit between miles 469.6 and 470.5 may do so if they transit at a distance no closer than 900 feet from the Ohio shoreline.

Small Entities

Under the Regulatory Flexibility Act (5 U.S.C. 601–612), we have considered whether this rule would have a significant economic impact on a substantial number of small entities. The term ''small entities'' comprises small businesses, not-for-profit organizations that are independently owned and operated and are not dominant in their fields, and governmental jurisdictions with populations of less than 50,000.

The Coast Guard certifies under 5 U.S.C. 605(b) that this rule will not have a significant economic impact on a substantial number of small entities. This rule will affect the following entities, some of which may be small entities: the owners or operators of recreational and commercial towing vessels intending to transit within 900 feet of the Ohio shoreline from mile marker 469.6 to mile marker 470.5, from 8 a.m. on October 14, 2003 until 1 p.m. on October 20, 2003. This safety zone will not have a significant economic impact on a substantial number of small entities because this rule will be in effect for only a short period of time, and the safety zone will not extend the entire width of the river. Vessels intending to transit between miles 469.6 and 470.5 may do so if they transit at a distance no closer than 900 feet from the Ohio shoreline.

If you are a small business entity and are significantly affected by this regulation please contact LT Tom Lake, Marine Safety Office Louisville, Planning Department, at (502) 582–5194.

Assistance for Small Entities

Under section 213(a) of the Small Business Regulatory Enforcement Fairness Act of 1996 (Pub. L. 104–121), we offered to assist small entities in understanding the rule so that they could better evaluate its effects on them and participate in the rulemaking process. Small businesses may send comments on the actions of Federal employees who enforce, or otherwise determine compliance with, Federal regulations to the Small Business and Agriculture Regulatory Enforcement Ombudsman and the Regional Small Business Regulatory Fairness Boards. The Ombudsman evaluates these actions annually and rates each agency's responsiveness to small business. If you wish to comment on actions by employees of the Coast Guard, call 1–888–REG–FAIR (1–888–734–3247).

Collection of Information

This rule calls for no new collection of information under the Paperwork Reduction Act of 1995 (44 U.S.C. 3501–3520).

Federalism

A rule has implications for federalism under Executive Order 13132, Federalism, if it has a substantial direct effect on State or local governments and would either preempt State law or impose a substantial direct cost of compliance on them. We have analyzed this rule under that Order and have determined that it does not have implications for federalism.

Unfunded Mandates Reform Act

The Unfunded Mandates Reform Act of 1995 (2 U.S.C. 1531–1538) requires Federal agencies to assess the effects of their discretionary regulatory actions. In particular, the Act addresses actions that may result in the expenditure by a state, local, or tribal government, in the aggregate, or by the private sector of $100,000,000 or more in any one year. Though this rule will not result in such an expenditure, we do discuss the effects of this rule elsewhere in this preamble.

Taking of Private Property

This rule will not effect a taking of private property or otherwise have taking implications under Executive Order 12630, Governmental Actions and Interference with Constitutionally Protected Property Rights.

Civil Justice Reform

This rule meets applicable standards in sections 3(a) and 3(b)(2) of Executive Order 12988, Civil Justice Reform, to minimize litigation, eliminate ambiguity, and reduce burden.

Protection of Children

We have analyzed this rule under Executive Order 13045, Protection of Children from Environmental Health Risks and Safety Risks. This rule is not an economically significant rule and does not create an environmental risk to health or risk to safety that may disproportionately affect children.

Indian Tribal Governments

This rule does not have tribal implications under Executive Order 13175, Consultation and Coordination

with Indian Tribal Governments, because it does not have a substantial direct effect on one or more Indian tribes, on the relationship between the Federal Government and Indian tribes, or on the distribution of power and responsibilities between the Federal Government and Indian tribes.

Energy Effects

We have analyzed this rule under Executive Order 13211, Actions Concerning Regulations That Significantly Affect Energy Supply, Distribution, or Use. We have determined that it is not a ''significant energy action'' under that order because it is not a ''significant regulatory action'' under Executive Order 12866 and is not likely to have a significant adverse effect on the supply, distribution, or use of energy. The Administrator of the Office of Information and Regulatory Affairs has not determined it as a significant energy action. Therefore, it does not require a Statement of Energy Effects under Executive Order 13211.

Environment

We have analyzed this rule under Commandant Instruction M16475.1D, which guides the Coast Guard in complying with the National Environmental Policy Act of 1969 (NEPA) (42 U.S.C. 4321–4370f), and have concluded that there are no factors in this case that would limit the use of a categorical exclusion under section 2.B.2 of the Instruction. Therefore, this rule is categorically excluded, under figure 2–1, paragraph (34)(g), of the Instruction, from further environmental documentation because this rule is not expected to result in any significant adverse environmental impact as described in NEPA. Paragraph (34)(g) is applicable because this rule is establishing a safety zone that will be effective for a period greater than one week. A final ''Environmental Analysis Check List'' and a final ''Categorical Exclusion Determination'' are available in the docket where indicated under **ADDRESSES**.

List of Subjects in 33 CFR Part 165

Harbors, Marine safety, Navigation (water), Reporting and recordkeeping requirements, Security measures, Waterways.

■ For the reasons discussed in the preamble, the Coast Guard amends 33 CFR part 165 as follows:

PART 165—REGULATED NAVIGATION AREAS AND LIMITED ACCESS AREAS

■ 1. The authority citation for part 165 continues to read as follows:

Authority: 33 U.S.C. 1226, 1231; 46 U.S.C. Chapter 701; 50 U.S.C. 191; 33 CFR 1.05–1(g), 6.04–1, 6.04–6, and 160.5; Pub. L. 103–295, 116 Stat. 2064; Department of Homeland Security Delegation No. 0170.1.

■ 2. A new temporary § 165.T08–129 is added to read as follows:

§ 165.T08–129 Safety Zone; Ohio River, Miles 469.6 to 470.5, Extending 900 feet from the Ohio shoreline, Cincinnati, OH.

(a) *Location.* The following area is safety zone: All waters of the Ohio River extending 900 feet from the Ohio shoreline beginning at mile marker 469.6 and ending at mile marker 470.5.

(b) *Effective date.* This section is effective from 8 a.m. on October 14, 2003 until 1 p.m. on October 20, 2003.

(c) *Regulations.* (1) In accordance with the general regulations in § 165.23 of this part, entry into this zone is prohibited unless authorized by the Captain of the Port Louisville or a designated representative.

(2) Persons or vessels requiring entry into or passage through the zone must request permission from the Captain of the Port Louisville or a designated representative. They may be contacted on VHF Channel 13 or 16.

(3) All persons and vessels shall comply with the instructions of the Captain of the Port Louisville and designated on-scene U.S. Coast Guard patrol personnel. On-scene U.S. Coast Guard patrol personnel include commissioned, warrant, and petty officers of the U.S. Coast Guard.

Dated: September 12, 2003.

T.D. Gilbreath,

Commander, U.S. Coast Guard, Captain of the Port Louisville.

[FR Doc. 03–25683 Filed 10–9–03; 8:45 am]

BILLING CODE 4910–15–P

ENVIRONMENTAL PROTECTION AGENCY

40 CFR Part 52

[PA 201–4401a; FRL–7570–4]

Approval and Promulgation of Air Quality Implementation Plans; Pennsylvania; Revised MOBILE6-Based Motor Vehicle Emission Budget for the Pennsylvania Portion of the Philadelphia-Wilmington-Trenton Ozone Nonattainment Area

AGENCY: Environmental Protection Agency (EPA).

ACTION: Direct final rule.

SUMMARY: EPA is taking direct final action to approve a revision to the Pennsylvania State Implementation Plan (SIP). Specifically, EPA is acting to approve a revised 2005 highway motor vehicle emission inventory for the Pennsylvania portion of the Philadelphia-Wilmington-Trenton (the Philadelphia area) 1-hour ozone attainment plan. This revised highway vehicle emissions inventory also serves as the 2005 motor vehicle emissions budget for purposes of determining transportation conformity under the Clean Air Act. The revised mobile emissions budget was developed using MOBILE6—the most recent available version of the EPA-developed MOBILE highway motor vehicle emission factor model. Revision of the mobile budget was a requirement of EPA's prior approval of the Commonwealth's 1-hour ozone National Ambient Air Quality Standard (NAAQS) attainment demonstration for the Philadelphia severe ozone nonattainment area. The intended effect of this direct final approval action is to approve a SIP revision that will assist Pennsylvania in attaining and conforming to attainment of the 1-hour ozone NAAQS standard in the Philadelphia area. This action is being taken by EPA in accordance with the requirements of the Clean Air Act.

DATES: This rule is effective on December 9, 2003 without further notice, unless EPA receives adverse written comment by November 10, 2003. If EPA receives such comments, it will publish a timely withdrawal of the direct final rule in the **Federal Register** and inform the public that the rule will not take effect.

ADDRESSES: Comments may be submitted either by mail or electronically. Written comments should be mailed to Makeba Morris, Chief, Air Quality Planning Branch, Mailcode 3AP21, U.S. Environmental Protection Agency, Region III, 1650 Arch Street, Philadelphia, Pennsylvania 19103. Electronic comments should be sent either to *morris.makeba@epa.gov* or to *http://www.regulations.gov*, which is an alternative method for submitting electronic comments to EPA. To submit comments, please follow the detailed instructions described in Part III of the **SUPPLEMENTARY INFORMATION** section. Copies of the documents relevant to this action are available for public inspection during normal business hours at the Air Protection Division, U.S. Environmental Protection Agency, Region III, 1650 Arch Street, Philadelphia, Pennsylvania 19103; and at the Pennsylvania Department of Environmental Protection, Bureau of Air Quality, P.O. Box 8468, 400 Market Street, Harrisburg, Pennsylvania 17105.

FOR FURTHER INFORMATION CONTACT: Brian Rehn, Air Quality Planning Branch, U.S. EPA, 1650 Arch Street, Mail Code 3AP21, Philadelphia, Pennsylvania 19103–2029, by telephone at (215) 814–2176, or by e-mail at *rehn.brian@epa.gov*.

SUPPLEMENTARY INFORMATION:

I. Background

A. Pennsylvania's SIP-Approved Attainment Demonstration and Mobile Budget

On October 21, 2001, EPA approved Pennsylvania's 1-hour ozone attainment demonstration SIP for the Philadelphia area (66 FR 54143). As part of that approval action, EPA required the Commonwealth to revise the SIP to include a recalculated 2005 attainment year motor vehicle transportation conformity emission budget. This 2005 highway mobile budget was to be updated using the latest version EPA's newest emission factor model (MOBILE6) within one year of the availability of that new version of the model. EPA released the MOBILE6 model on January 29, 2002, and therefore Pennsylvania was required to submit its revised mobile budget SIP for the Philadelphia area by January 29, 2003.

On January 17, 2003, Pennsylvania formally submitted a revision to its SIP containing the updated mobile budget, revising using MOBILE6, for the Philadelphia ozone nonattainment area. On May 28, 2003, EPA published a notice in the **Federal Register** (68 FR 31700) declaring this revised Philadelphia mobile budget adequate for transportation conformity purposes.

B. Background on the MOBILE Emission Factor Model and Related EPA Policy

MOBILE is an EPA emissions factor model for estimating pollution from on-road motor vehicles in states (with the exception of California, which has developed its own model). The MOBILE model calculates emissions of volatile organic compounds (VOCs), nitrogen oxides (NO_X) and carbon monoxide (CO) from passenger cars, motorcycles, buses, and light-duty and heavy-duty trucks. The model accounts for the emission impacts of factors such as changes in vehicle emission standards, changes in vehicle populations and activity, and variation in local conditions such as temperature, humidity, fuel quality, and air quality programs. Among other uses, the MOBILE model helps to calculate current and future inventories of motor vehicle emissions at the national and local level. These inventories are used to make decisions about air pollution policy and programs at the local, state and national level. Inventories based on MOBILE are also used to meet the federal Clean Air Act's SIP and transportation conformity requirements.

The MOBILE model, first developed in 1978, has been updated many times to reflect changes to motor vehicles and fuel composition, to incorporate better understanding of vehicle emissions, and to reflect new emissions programs. EPA announced the release of the MOBILE6 version of the MOBILE model in the January 29, 2002 edition of the **Federal Register** (67 FR 4254), as a replacement for a MOBILE5 version of the model.

In November of 1999, EPA issued two memoranda [1] to articulate its policy regarding states that incorporated MOBILE5-based interim Tier 2 standard [2] benefits into their attainment demonstration plans and those plans' associated motor vehicle emissions budgets (or budgets).

EPA has implemented this policy in all ozone nonattainment areas where a state assumed federal Tier 2 benefits in its attainment demonstration plans according to EPA's April 2000 MOBILE5 guidance, ''MOBILE5 Information Sheet #8: Tier 2 Benefits Using MOBILE5.'' States whose attainment demonstrations or maintenance plans include interim MOBILE5-based estimates of the Tier 2 standards were required to revise and resubmit their budgets within either one or two years of the final release of MOBILE6.

EPA's October 21, 2001 (66 FR 54143) approval of Pennsylvania's 1-hour ozone attainment demonstration plan for the Philadelphia area was based upon an interim mobile budget, with projected reductions from Tier 2 motor vehicle standards estimated using the MOBILE5 model. EPA's October 2001 approval of Pennsylvania's 1-hour ozone attainment demonstration for the Philadelphia area required a MOBILE6-based motor vehicle emissions budget SIP revision within one year after EPA released the MOBILE6 model. EPA released the MOBILE6 model on January 29, 2002, therefore Pennsylvania's MOBILE6 mobile budget SIP was due January 29, 2003.

II. Summary of SIP Revision and EPA's Review

On January 17, 2003, the Commonwealth of Pennsylvania submitted a SIP revision containing updated inventories of emissions of the ozone precursors VOC and NO_X from highway mobile sources operating in the Philadelphia ozone attainment area. These summertime inventories were generated for summertime periods in 1990 and for 2005, the year Philadelphia is to attain the 1-hour ozone standard. This updated motor vehicle emissions modeling was generated through use of the newly released MOBILE6 model. The 2005 motor vehicle emissions inventory projection also serves as the motor vehicle emissions budget, or mobile budget, for transportation conformity planning. The Commonwealth's January 2003 SIP revision is intended to demonstrate that the updated projections of motor vehicle emissions (calculated using the MOBILE6 emissions factor model) continue to support the demonstrations of attainment of the 1-hour ozone NAAQS for the Philadelphia area by 2005.

Table 1 below contrasts Pennsylvania's revised MOBILE6-based motor vehicle emissions inventories with the previously approved MOBILE5-based inventories for the Philadelphia area, by pollutant, expressed in units of tons per summer day (tpd). These revised inventories were developed using the latest available planning assumptions, including 1999 Pennsylvania Department of Transportation vehicle registration data and 1999 traffic data and information vehicle miles traveled (VMT). Updated information was used for atmospheric model input (*i.e.*, temperature and humidity conditions). Rates of growth for highway mobile sources have also been updated.

[1] Memoranda, ''Guidance on Motor Vehicle Emissions Budgets in 1-Hour Ozone Attainment Demonstrations,'' issued November 3, 1999, and ''1-Hour Ozone Attainment Demonstrations and Tier2/Sulfur Rulemaking,'' issued November 8, 1999. Copies of these memoranda can be found on EPA's Web site at *http://www.epa.gov/otaq/transp/traqconf.htm*.

[2] The final rule on Tier 2 Motor Vehicle Emissions Standards and Gasoline Sulfur Control Requirements (''Tier 2 standards'') for passenger cars, light trucks, and larger passenger vehicles was published on February 10, 2000 (65 FR 6698).

TABLE 1.—COMPARISON OF PENNSYLVANIA'S MOBILE5 AND REVISED MOBILE6-BASED HIGHWAY MOBILE EMISSIONS INVENTORIES FOR THE PHILADELPHIA 1-HOUR OZONE ATTAINMENT PLAN

Philadelphia 5-county area	1990		2005	
	VOC (tpd)	NO_X (tpd)	VOC (tpd)	NO_X (tpd)
MOBILE5-based inventory	187.90	158.33	60.18	77.46
MOBILE6-based (revised) inventory	239.95	252.93	79.69	144.73

EPA's articulated its policy regarding its policy on the use of MOBILE6 modeling for purposes of SIP development in several guidance documents entitled ''Policy Guidance on the Use of MOBILE6 for SIP Development and Transportation Conformity''[3] and ''Clarification of Policy Guidance for MOBILE6 in Mid-course Review Areas.''[4]

Pennsylvania's January 17, 2003 SIP revision includes an explanation of the differences between the MOBILE5 and MOBILE6-based inventories. The SIP also provides a comparison of the relative reduction, by percentage, between the 1990 and 2005 inventories generated using the two different versions of the models to ensure that the approved Philadelphia 1-hour ozone attainment demonstration will continue to demonstrate attainment by 2005. The methodology for this relative reduction comparison consists of comparing the revised MOBILE6 baseline and attainment case inventories, by pollutant, with the previously approved (66 FR 54143) MOBILE5 inventory totals for the 5-county Philadelphia area to determine if attainment can still be predicted by the attainment date. The Commonwealth then compared these relative reduction percentages for the MOBILE5 versus MOBILE6 inventories for 1995 and 2005. It should be noted that since the latest available planning assumptions were used the revised, MOBILE6-based modeling, this relative reduction comparison is not an exact comparison of only the differences between the different versions of the MOBILE models.

Pennsylvania's relative reduction comparison shows that the reduction in VOC emissions, on a percentage basis, is greater in the revised MOBILE 6-based inventories than in the previously approved MOBILE5 inventories. However, the there is a slight increase, on a percentage basis, in NO_X in the revised MOBILE6-based inventories compared to the previous MOBILE5 inventories. The Commonwealth argues that the benefit of additional reduction in VOCs outweighs the slight NO_X increase—which the Commonwealth justifies quantitatively by using a 1.3 to 1 VOC to NO_X substitution ratio to weigh directly the actual VOC to NO_X emissions resultant from the MOBILE5 and MOBILE6-based inventories. This method of weighting VOC versus NO_X emissions shows that the increased reductions in VOC emissions outweigh the increase in NO_X emissions demonstrated by the MOBILE6-based inventories. Pennsylvania's choice of VOC to NO_X substitution ratios for this comparison stems from its use in New Source Review emission trading in the Philadelphia ozone nonattainment area.

EPA's relevant policy guidance also required the Commonwealth to consider whether growth and control strategy assumptions for other sources (*i.e.*, point, area, and non-road mobile sources) were still accurate at the time the revised MOBILE6 budget SIP submission (*i.e.*, January 2003). Pennsylvania's SIP revision states that growth and control strategy assumptions for these other emissions sources have been reevaluated, with the conclusion that these assumptions for growth and control strategies continue to be valid for the Philadelphia 1-hour ozone attainment demonstration.

Pennsylvania's January 17, 2003 SIP revision satisfies the conditions outlined in EPA's MOBILE6 Policy guidance, and demonstrates that the new levels of motor vehicle emissions calculated using MOBILE6 continue to support achievement of the projected attainment of the 1-Hour Ozone NAAQS by the attainment date of 2005 for Pennsylvania portion of the Philadelphia-Wilmington-Trenton area.

The Revised Mobile Budget

For Pennsylvania's Philadelphia area attainment plan, the mobile budgets are the on-road components of VOC and NO_X emissions of the 2005 attainment inventories. Table 2 below summarizes Pennsylvania's revised budgets contained in the January 17, 2003 submittal. These budgets were developed using the latest planning assumptions, including 1999 vehicle registration data and VMT. Because Pennsylvania's January 2003 submittal satisfies the conditions outlined in EPA's MOBILE6 Policy guidance, and demonstrates that the new levels of motor vehicle emissions calculated using MOBILE6 continue to support achievement of the projected attainment of the 1-Hour Ozone NAAQS, EPA is taking rulemaking action to approve this mobile emissions budget.

TABLE 2.—PHILADELPHIA MOTOR VEHICLE EMISSIONS BUDGET

Type of Control Strategy SIP	VOC (tpd)	NO_X (tpd)
1-Hour ozone attainment demonstration SIP	79.69	144.73

III. Final Action

Pennsylvania has adequately demonstrated to EPA that its 1-hour attainment demonstration SIP for the Philadelphia area (as revised in by the January 2003 MOBILE6-based highway emissions inventory) will continue to demonstrate attainment of the ozone NAAQS with the incorporation of the

[3] Memorandum, ''Policy Guidance on the Use of MOBILE6 for SIP development and Transportation Conformity,'' issued January 18, 2002. A copy of this memorandum can be found on EPA's Web site at *http://www.epa.gov/otaq/transp/traqconf.htm.*

[4] Memorandum, ''Clarification of Policy Guidance for MOBILE6 SIPs in Mid-course Review Areas,'' issued February 12, 2003. A copy of this memorandum can be found on EPA's Web site at *http://www.epa.gov/otaq/transp/traqconf.htm.*

updated highway emissions inventory. EPA is therefore approving the Pennsylvania SIP revision submitted on January 17, 2003 to revise the Philadelphia 1990 and 2005 highway mobile VOC and NO_X emissions inventories and the revised 2005 motor vehicle emissions budget.

EPA is publishing this rule without prior proposal because the Agency views this as a noncontroversial amendment and anticipates no adverse comment, as this revision serves the purpose of updating the highway mobile emissions inventory using the latest version of EPA's mobile source emission factor model and the most recently available emissions modeling planning assumptions. This SIP revision is the result of a requirement to update the highway mobile inventory using MOBILE6 specified by EPA's October 26, 2001 approval of the Pennsylvania's 1-hour ozone attainment demonstration for the Philadelphia area. Also, EPA declared the mobile source inventory adequate for transportation conformity purposes on May 28, 2003.

However, in the ''Proposed Rules'' section of today's **Federal Register**, EPA is publishing a separate document that will serve as the proposal to approve this SIP revision if adverse comments are filed. This rule will be effective on December 9, 2003 without further notice unless EPA receives adverse comment by November 10, 2003. If EPA receives adverse comment, EPA will publish a timely withdrawal in the **Federal Register** informing the public that the rule will not take effect. EPA will address all public comments in a subsequent final rule based on the proposed rule. EPA will not institute a second comment period on this action. Any parties interested in commenting must do so at this time. Please note that if EPA receives adverse comment on an amendment, paragraph, or section of this rule and if that provision may be severed from the remainder of the rule, EPA may adopt as final those provisions of the rule that are not the subject of an adverse comment.

You may submit comments either electronically or by mail. To ensure proper receipt by EPA, identify the appropriate rulemaking identification number (PA 201–4401) in the subject line on the first page of your comment. Please ensure that your comments are submitted within the specified comment period. Comments received after the close of the comment period will be marked ''late.'' EPA is not required to consider these late comments.

1. *Electronically.* If you submit an electronic comment as prescribed below, EPA recommends that you include your name, mailing address, and an e-mail address or other contact information in the body of your comment. Also include this contact information on the outside of any disk or CD ROM you submit, and in any cover letter accompanying the disk or CD ROM. This ensures that you can be identified as the submitter of the comment and allows EPA to contact you in case EPA cannot read your comment due to technical difficulties or needs further information on the substance of your comment. EPA's policy is that EPA will not edit your comment, and any identifying or contact information provided in the body of a comment will be included as part of the comment that is placed in the official public docket. If EPA cannot read your comment due to technical difficulties and cannot contact you for clarification, EPA may not be able to consider your comment.

i. *E-mail.* Comments may be sent by electronic mail (e-mail) to: *morris.makeba@epa.gov,* attention PA 201–4401. EPA's e-mail system is not an ''anonymous access'' system. If you send an e-mail comment directly without going through Regulations.gov , EPA's e-mail system automatically captures your e-mail address. E-mail addresses that are automatically captured by EPA's e-mail system are included as part of the comment that is placed in the official public docket.

ii. *Regulations.gov.* Your use of Regulation.gov is an alternative method of submitting electronic comments to EPA. Go directly to *http://www.regulations.gov,* then select ''Environmental Protection Agency'' at the top of the page and use the ''go'' button. The list of current EPA actions available for comment will be listed. Please follow the online instructions for submitting comments. The system is an ''anonymous access'' system, which means EPA will not know your identity, e-mail address, or other contact information unless you provide it in the body of your comment.

iii. *Disk or CD ROM.* You may submit comments on a disk or CD ROM that you mail to the mailing address identified in the **ADDRESSES** section of this document. These electronic submissions will be accepted in WordPerfect, Word or ASCII file format. Avoid the use of special characters and any form of encryption.

2. *By Mail.* Written comments should be addressed to the EPA Regional office listed in the **ADDRESSES** section of this document. For public commenters, it is important to note that EPA's policy is that public comments, whether submitted electronically or in paper, will be made available for public viewing at the EPA Regional Office, as EPA receives them and without change, unless the comment contains copyrighted material, confidential business information (CBI), or other information whose disclosure is restricted by statute. When EPA identifies a comment containing copyrighted material, EPA will provide a reference to that material in the version of the comment that is placed in the official public rulemaking file. The entire printed comment, including the copyrighted material, will be available at the Regional Office for public inspection.

Submittal of CBI Comments

Do not submit information that you consider to be CBI electronically to EPA. You may claim information that you submit to EPA as CBI by marking any part or all of that information as CBI (if you submit CBI on disk or CD ROM, mark the outside of the disk or CD ROM as CBI and then identify electronically within the disk or CD ROM the specific information that is CBI). Information so marked will not be disclosed except in accordance with procedures set forth in 40 CFR Part 2.

In addition to one complete version of the comment that includes any information claimed as CBI, a copy of the comment that does not contain the information claimed as CBI must be submitted for inclusion in the official public regional rulemaking file. If you submit the copy that does not contain CBI on disk or CD ROM, mark the outside of the disk or CD ROM clearly that it does not contain CBI. Information not marked as CBI will be included in the public file and available for public inspection without prior notice. If you have any questions about CBI or the procedures for claiming CBI, please consult the person identified in the **FOR FURTHER INFORMATION CONTACT** section.

Considerations When Preparing Comments to EPA

You may find the following suggestions helpful for preparing your comments:

1. Explain your views as clearly as possible.
2. Describe any assumptions that you used.
3. Provide any technical information and/or data you used that support your views.
4. If you estimate potential burden or costs, explain how you arrived at your estimate.
5. Provide specific examples to illustrate your concerns.
6. Offer alternatives.

7. Make sure to submit your comments by the comment period deadline identified.
8. To ensure proper receipt by EPA, identify the appropriate regional file/rulemaking identification number in the subject line on the first page of your response. It would also be helpful if you provided the name, date, and **Federal Register** citation related to your comments.

IV. Statutory and Executive Order Reviews

A. General Requirements

Under Executive Order 12866 (58 FR 51735, October 4, 1993), this action is not a ''significant regulatory action'' and therefore is not subject to review by the Office of Management and Budget. For this reason, this action is also not subject to Executive Order 13211, ''Actions Concerning Regulations That Significantly Affect Energy Supply, Distribution, or Use'' (66 FR 28355, May 22, 2001). This action merely approves state law as meeting federal requirements and imposes no additional requirements beyond those imposed by state law. Accordingly, the Administrator certifies that this rule will not have a significant economic impact on a substantial number of small entities under the Regulatory Flexibility Act (5 U.S.C. 601 *et seq.*). Because this rule approves pre-existing requirements under state law and does not impose any additional enforceable duty beyond that required by state law, it does not contain any unfunded mandate or significantly or uniquely affect small governments, as described in the Unfunded Mandates Reform Act of 1995 (Public Law 104–4). This rule also does not have tribal implications because it will not have a substantial direct effect on one or more Indian tribes, on the relationship between the Federal Government and Indian tribes, or on the distribution of power and responsibilities between the Federal Government and Indian tribes, as specified by Executive Order 13175 (65 FR 67249, November 9, 2000). This action also does not have federalism implications because it does not have substantial direct effects on the states, on the relationship between the national government and the states, or on the distribution of power and responsibilities among the various levels of government, as specified in Executive Order 13132 (64 FR 43255, August 10, 1999). This action merely approves a state rule implementing a federal standard, and does not alter the relationship or the distribution of power and responsibilities established in the Clean Air Act. This rule also is not subject to Executive Order 13045 ''Protection of Children from Environmental Health Risks and Safety Risks'' (62 FR 19885, April 23, 1997), because it is not economically significant.

In reviewing SIP submissions, EPA's role is to approve state choices, provided that they meet the criteria of the Clean Air Act. In this context, in the absence of a prior existing requirement for the State to use voluntary consensus standards (VCS), EPA has no authority to disapprove a SIP submission for failure to use VCS. It would thus be inconsistent with applicable law for EPA, when it reviews a SIP submission, to use VCS in place of a SIP submission that otherwise satisfies the provisions of the Clean Air Act. Thus, the requirements of section 12(d) of the National Technology Transfer and Advancement Act of 1995 (15 U.S.C. 272 *note*) do not apply. This rule does not impose an information collection burden under the provisions of the Paperwork Reduction Act of 1995 (44 U.S.C. 3501 *et seq.*).

B. Submission to Congress and the Comptroller General

The Congressional Review Act, 5 U.S.C. 801 *et seq.*, as added by the Small Business Regulatory Enforcement Fairness Act of 1996, generally provides that before a rule may take effect, the agency promulgating the rule must submit a rule report, which includes a copy of the rule, to each House of the Congress and to the Comptroller General of the United States. EPA will submit a report containing this rule and other required information to the U.S. Senate, the U.S. House of Representatives, and the Comptroller General of the United States prior to publication of the rule in the **Federal Register**. This rule is not a ''major rule'' as defined by 5 U.S.C. 804(2).

C. Petitions for Judicial Review

Under section 307(b)(1) of the Clean Air Act, petitions for judicial review of this action must be filed in the United States Court of Appeals for the appropriate circuit by December 9, 2003. Filing a petition for reconsideration by the Administrator of this final rule does not affect the finality of this rule for the purposes of judicial review nor does it extend the time within which a petition for judicial review may be filed, and shall not postpone the effectiveness of such rule or action. This action may not be challenged later in proceedings to enforce its requirements. (*See* section 307(b)(2).)

List of Subjects in 40 CFR Part 52

Environmental protection, Air pollution control, Intergovernmental relations, Nitrogen dioxide, Ozone, Particulate matter, Reporting and recordkeeping requirements, Volatile organic compounds.

Dated: September 29, 2003.

James W. Newsom,

Acting Regional Administrator, Region III.

■ 40 CFR part 52 is amended as follows:

PART 52—[AMENDED]

■ 1. The authority citation for part 52 continues to read as follows:

Authority: 42 U.S.C. 7401 *et seq.*

Subpart NN—Pennsylvania

■ 2. Section 52.2037 is amended by:
■ a. Removing and reserving paragraph (j)(2);
■ b. Revising paragraph (k);
■ c. Adding paragraph (l).

The revision and addition read as follows:

§ 52.2037 Control strategy and rate-of-progress plans: ozone.

* * * * *

(j) * * *

(2) [Reserved]

* * * * *

(k) EPA approves the following mobile budgets of the post-1996 rate of progress plans and the 2005 attainment plan:

TRANSPORTATION CONFORMITY BUDGETS FOR THE PHILADELPHIA AREA

Type of control strategy SIP	Year	VOC (tpd)	NO_X	Date of adequacy determination
Post-1996 ROP Plan	1999	88.6	109.6	June 23, 2000 (65 FR 36438, June 8, 2000)
Post-1996 ROP Plan	2002	69.52	93.13	June 23, 2000 (65 FR 36438, June 8, 2000)
Post-1996 ROP Plan	2005	61.76	86.42	June 23, 2000 (65 FR 36438, June 8, 2000)
Attainment Demonstration	2005	79.69	144.73	June 12, 2003 (68 FR 31700, May 28, 2003)

(1) [Reserved]

(2) [Reserved]

(l) EPA approves the Commonwealth of Pennsylvania's revised 1990 and the 2005 VOC and NO_X highway mobile emissions inventories and the 2005 motor vehicle emissions budgets for the 1-hour ozone attainment SIP for the Philadelphia-Wilmington-Trenton severe ozone nonattainment area. These revisions were submitted by the Pennsylvania Department of Environmental Protection on January 17, 2003. Submission of these revised MOBILE6-based motor vehicle emissions inventories was a requirement of EPA's approval of the attainment demonstration under paragraph (j) of this section.

[FR Doc. 03–25634 Filed 10–9–03; 8:45 am]

BILLING CODE 6560–50–P

ENVIRONMENTAL PROTECTION AGENCY

40 CFR Part 62

[NV–AM–NMI–103–NEGDECa; FRL–7572–5]

Approval and Promulgation of State Air Quality Plans for Designated Facilities and Pollutants; Control of Emissions From Existing Hospital/Medical/Infectious Waste Incinerator Units; Control of Emissions From Existing Large Municipal Waste Combustors; Nevada; American Samoa; Northern Mariana Islands

AGENCY: Environmental Protection Agency (EPA).

ACTION: Direct final rule.

SUMMARY: EPA is taking direct final action to approve negative declarations submitted by American Samoa, Northern Mariana Islands, and Nevada. The negative declarations from American Samoa and Northern Mariana Islands certify that large municipal waste combustors, subject to the requirements of sections 111(d) and 129 of the Clean Air Act, do not exist within the air pollution control jurisdiction of these agencies. The negative declaration from Nevada certifies that there are no existing hospital/medical/infectious waste incinerator units within the Nevada Division of Environmental Protection's air pollution control jurisdiction.

DATES: This rule is effective on December 9, 2003 without further notice, unless EPA receives adverse comments by November 10, 2003. If we receive such comment, we will publish a timely withdrawal in the **Federal Register** to notify the public that this rule will not take effect.

ADDRESSES: Send comments to Andrew Steckel, Rulemaking Office Chief (AIR–4), U.S. Environmental Protection Agency, Region IX, 75 Hawthorne Street, San Francisco, CA 94105–3901, or e-mail to *steckel.andrew@epa.gov*, or submit comments at *http://www.regulations.gov*.

FOR FURTHER INFORMATION CONTACT: Mae Wang, EPA Region IX, (415) 947–4124, *wang.mae@epa.gov*.

SUPPLEMENTARY INFORMATION:

I. Background

Sections 111(d) and 129 of the Clean Air Act (CAA or the Act) require States to submit plans to control certain pollutants (designated pollutants) at existing solid waste combustor facilities (designated facilities) whenever standards of performance have been established under section 111(b) for new sources of the same type, and EPA has established emission guidelines (EG) for such existing sources. A designated pollutant is any pollutant for which no air quality criteria have been issued, and which is not included on a list published under section 108(a) or section 112(b)(1)(A) of the CAA, but emissions of which are subject to a standard of performance for new stationary sources. However, section 129 of the CAA also requires EPA to promulgate EG for hospital/medical/infectious waste incinerator units (HMIWIs) and large municipal waste combustors (MWCs) that emit a mixture of air pollutants. These pollutants include particulate matter, opacity, sulfur dioxide, hydrogen chloride, oxides of nitrogen, carbon monoxide, lead, cadmium, mercury, and dioxins and dibenzofurans. The EG for HMIWI were published in final form on September 15, 1997 (62 FR 48348), and are located at 40 CFR part 60, subpart Ce. The EG for large MWC were promulgated on December 19, 1995, and are located at 40 CFR part 60, subpart Cb (*see* 60 FR 65387). On August 25, 1997, EPA amended subpart Cb to apply only to MWC units with an individual capacity to combust more than 250 tpd of MSW (*see* 62 FR 45116).

Subpart B of 40 CFR part 60 establishes procedures to be followed and requirements to be met in the development and submission of State plans for controlling designated pollutants. Also, 40 CFR part 62 provides the procedural framework for the submission of these plans. When designated facilities are located in a State, the State must then develop and submit a plan for the control of the designated pollutant. However, 40 CFR 60.23(b) and 62.06 provide that if there are no existing sources of the designated pollutant in the State, the State may submit a letter of certification to that effect (*i.e.*, negative declaration) in lieu of a plan. The negative declaration exempts the State from the requirements of subpart B for the submittal of a 111(d)/129 plan.

II. Final EPA Action

The Nevada Division of Environmental Protection has determined that there are no designated facilities subject to the HMIWI EG requirements in its air pollution control jurisdiction. The American Samoa Environmental Protection Agency and the Commonwealth of the Northern Mariana Islands Division of Environmental Quality have determined that there are no designated facilities subject to the large MWC EG requirements in their respective air pollution control jurisdictions. Accordingly, each air pollution control agency has submitted to EPA a negative declaration letter certifying this fact. EPA is amending part 62 to reflect the receipt of these negative declaration letters from the noted air pollution control agencies. The submittal dates of these letters are listed in the following table:

Air pollution control agency	Date of negative declaration
Nevada DEP (HMIWI)	May 26, 1998.
American Samoa (large MWC).	Jan. 20, 1998.
Northern Mariana Islands (large MWC).	Jan. 27, 1998.

After publication of this **Federal Register** notice, if a large MWC or HMIWI facility is later found within these jurisdictions, then the overlooked facility will become subject to the requirements of the appropriate Federal 111(d)/129 plan, contained in 40 CFR part 62. The Federal plan would no longer apply if EPA subsequently were to receive and approve a 111(d)/129 plan from the jurisdiction with the overlooked facility.

EPA is publishing this action without prior proposal because the Agency views this as a noncontroversial amendment and anticipates no adverse comments. This action simply reflects already existing Federal requirements for State air pollution control agencies under 40 CFR parts 60 and 62. In the Proposed Rules section of this **Federal Register** publication, EPA is publishing a separate document that will serve as the proposal to approve each negative

declaration should relevant adverse or critical comments be filed.

This rule will be effective December 9, 2003 without further notice unless the Agency receives relevant adverse comments by November 10, 2003. If EPA receives such comments, then EPA will publish a timely withdrawal in the **Federal Register** to notify the public that the direct final approval will not take effect and we will address the comments in a subsequent final action based on the proposal. The EPA will not institute a second comment period on this action. Any parties interested in commenting must do so at this time. Please note that if EPA receives adverse comment on an amendment, paragraph, or section of this rule and if that provision may be severed from the remainder of the rule, then EPA may adopt as final those provisions of the rule that are not the subject of an adverse comment.

III. Statutory and Executive Order Reviews

A. General Requirements

Under Executive Order 12866 (58 FR 51735, October 4, 1993), this action is not a ''significant regulatory action'' and therefore is not subject to review by the Office of Management and Budget. For this reason, this action is also not subject to Executive Order 13211, ''Actions Concerning Regulations That Significantly Affect Energy Supply, Distribution, or Use'' (66 FR 28355, May 22, 2001). This action merely approves State certifications as meeting Federal requirements and imposes no additional requirements beyond those imposed by State law. Accordingly, the Administrator certifies that this rule will not have a significant economic impact on a substantial number of small entities under the Regulatory Flexibility Act (5 U.S.C. 601 *et seq.*). Because this rule does not impose any additional enforceable duty beyond that required by State law, it does not contain any unfunded mandate or significantly or uniquely affect small governments, as described in the Unfunded Mandates Reform Act of 1995 (Pub. L. 104–4).

This rule also does not have tribal implications because it will not have a substantial direct effect on one or more Indian tribes, on the relationship between the Federal Government and Indian tribes, or on the distribution of power and responsibilities between the Federal Government and Indian tribes, as specified by Executive Order 13175 (65 FR 67249, November 9, 2000). This action also does not have Federalism implications because it does not have substantial direct effects on the States, on the relationship between the national government and the States, or on the distribution of power and responsibilities among the various levels of government, as specified in Executive Order 13132 (64 FR 43255, August 10, 1999). This action merely approves State certifications implementing a Federal standard, and does not alter the relationship or the distribution of power and responsibilities established in the Clean Air Act. This rule also is not subject to Executive Order 13045 ''Protection of Children from Environmental Health Risks and Safety Risks'' (62 FR 19885, April 23, 1997), because it is not economically significant.

In reviewing 111(d)/129 plan submissions, EPA's role is to approve State choices, provided that they meet the criteria of the Clean Air Act. In this context, in the absence of a prior existing requirement for the State to use voluntary consensus standards (VCS), EPA has no authority to disapprove a 111(d)/129 plan submission for failure to use VCS. It would thus be inconsistent with applicable law for EPA, when it reviews a 111(d)/129 plan submission, to use VCS in place of a 111(d)/129 plan submission that otherwise satisfies the provisions of the Clean Air Act. Thus, the requirements of section 12(d) of the National Technology Transfer and Advancement Act of 1995 (15 U.S.C. 272 note) do not apply. This rule does not impose an information collection burden under the provisions of the Paperwork Reduction Act of 1995 (44 U.S.C. 3501 *et seq.*).

B. Submission to Congress and the Comptroller General

The Congressional Review Act, 5 U.S.C. 801 *et seq.*, as added by the Small Business Regulatory Enforcement Fairness Act of 1996, generally provides that before a rule may take effect, the agency promulgating the rule must submit a rule report, which includes a copy of the rule, to each House of the Congress and to the Comptroller General of the United States. EPA will submit a report containing this rule and other required information to the U.S. Senate, the U.S. House of Representatives, and the Comptroller General of the United States prior to publication of the rule in the **Federal Register**. This rule is not a ''major rule'' as defined by 5 U.S.C. 804(2).

C. Petitions for Judicial Review

Under section 307(b)(1) of the Clean Air Act, petitions for judicial review of this action must be filed in the United States Court of Appeals for the appropriate circuit by December 9, 2003. Filing a petition for reconsideration by the Administrator of this final rule does not affect the finality of this rule for the purposes of judicial review nor does it extend the time within which a petition for judicial review may be filed, and shall not postpone the effectiveness of such rule or action. This action approving the section 111(d)/129 negative declarations submitted by the air pollution control agencies in Nevada, American Samoa, and Northern Mariana Islands may not be challenged later in proceedings to enforce its requirements (*see* section 307(b)(2)).

List of Subjects in 40 CFR Part 62

Environmental protection, Administrative practice and procedure, Air pollution control, Aluminum, Fertilizers, Fluoride, Intergovernmental relations, Paper and paper products industry, Phosphate, Reporting and recordkeeping requirements, Sulfur oxides, Sulfuric acid plants, Waste treatment and disposal.

Dated: September 25, 2003.

Deborah Jordan,

Acting Regional Administrator, Region IX.

■ Part 62, Chapter I, Title 40 of the Code of Federal Regulations is amended as follows:

PART 62—[AMENDED]

■ 1. The authority citation for part 62 continues to read as follows:

Authority: 42 U.S.C. 7401–7671q.

Subpart DD—Nevada

■ 2. Subpart DD is amended by adding an undesignated center heading and § 62.7135 to read as follows:

Emissions From Existing Hospital/Medical/Infectious Waste Incinerators

§ 62.7135 Identification of plan—negative declaration.

Letter from the Nevada Division of Environmental Protection, submitted on May 26, 1998, certifying that there are no existing hospital/medical/infectious waste incineration units subject to 40 CFR part 60, subpart Ce, of this chapter.

■ 3. Part 62 is amended by adding Subpart AAA to read as follows:

Subpart AAA—American Samoa

Emissions From Existing Municipal Waste Combustors With the Capacity To Burn Greater Than 250 Tons per Day of Municipal Solid Waste

§ 62.12900 Identification of plan—negative declaration.

Letter from the American Samoa Environmental Protection Agency, submitted on January 20, 1998, certifying that there are no municipal waste combustion units subject to part 60, subpart Cb, of this chapter.

■ 4. Part 62 is amended by adding Subpart DDD to read as follows:

Subpart DDD—Northern Mariana Islands

Emissions From Existing Municipal Waste Combustors With the Capacity To Burn Greater Than 250 Tons per Day of Municipal Solid Waste

§ 62.13600 Identification of plan—negative declaration.

Letter from the Commonwealth of the Northern Mariana Islands Division of Environmental Quality, submitted on January 27, 1998, certifying that there are no municipal waste combustion units subject to part 60, subpart Cb, of this chapter.

[FR Doc. 03–25802 Filed 10–9–03; 8:45 am]

BILLING CODE 6560–50–P

ENVIRONMENTAL PROTECTION AGENCY

40 CFR Part 63

[Docket ID No. OAR–2002–0043; FRL–7551–4]

RIN 2060–AH03

National Emission Standards for Hazardous Air Pollutants for Primary Magnesium Refining

AGENCY: Environmental Protection Agency (EPA).

ACTION: Final rule.

SUMMARY: This action promulgates national emission standards for hazardous air pollutants (NESHAP) for primary magnesium refining facilities. The EPA has identified primary magnesium refining facilities as a major source of hazardous air pollutant (HAP) emissions. The NESHAP implement section 112(d) of the Clean Air Act (CAA) by requiring all major sources to meet HAP emission standards reflecting application of the maximum achievable control technology (MACT).

The HAP emitted by facilities in the primary magnesium refining source category include chlorine, hydrochloric acid, dioxin/furan, and trace amounts of several HAP metals. Exposure to these substances has been demonstrated to cause adverse health effects, including chronic and acute disorders of the blood, heart, kidneys, reproductive system, and central nervous system. Some of these pollutants are considered to be carcinogens, and all can cause toxic effects in humans following sufficient exposure.

EFFECTIVE DATE: October 10, 2003.

ADDRESSES: The official public docket is the collection of materials used in developing the final rule and is available for public viewing at the EPA Docket Center (EPA/DC), EPA West, Room B–102, 1301 Constitution Ave., NW., Washington, DC 20460.

FOR FURTHER INFORMATION CONTACT: Lula Melton, Metals Group, Emission Standards Division (C439–02), U.S. EPA, Research Triangle Park, NC 27711, telephone number: (919) 541–2910, electronic mail address: *melton.lula@epa.gov.*

SUPPLEMENTARY INFORMATION:

Regulated Entities. Categories and entities potentially regulated by this action include:

Category	NAICS [1]	Examples of regulated entities
Industry	331419	Primary refiners of nonferrous metals (magnesium) by electrolytic methods.

[1] North American Industry Classification System.

This table is not intended to be exhaustive, but rather provides a guide for readers regarding entities likely to be regulated by this action. To determine whether your facility is regulated by this action, you should examine the applicability criteria in § 63.9881 of the final rule. If you have any questions regarding the applicability of this action to a particular entity, consult the person listed in the preceding **FOR FURTHER INFORMATION CONTACT** section.

Docket. The EPA has established an official public docket for this action including both Docket ID No. OAR–2002–0043 and Docket ID No. A–2002–0027. The official public docket consists of the documents specifically referenced in this action, any public comments received, and other information related to this action. All items may not be listed under both docket numbers, so interested parties should inspect both docket numbers to ensure that they have received all materials relevant to the final rule. Although a part of the official docket, the public docket does not include Confidential Business Information or other information whose disclosure is restricted by statute. The official public docket is available for public viewing at the EPA Docket Center (Air Docket), EPA West, Room B–102, 1301 Constitution Ave., NW., Washington, DC. The EPA Docket Center Public Reading Room is open from 8:30 a.m. to 4:30 p.m., Monday through Friday, excluding legal holidays. The telephone number for the Reading Room is (202) 566–1744, and the telephone number for the Air Docket is (202) 566–1742.

Electronic Docket Access. You may access the final rule electronically through the EPA Internet under the ''**Federal Register**'' listings at *http://www.epa.gov/fedrgstr/.* An electronic version of the public docket is available through EPA's electronic public docket and comment system, EPA Dockets. You may use EPA Dockets at *http://www.epa.gov/edocket/* to view public comments, access the index of the contents of the official public docket, and to access those documents in the public docket that are available electronically. Although not all docket materials may be available electronically, you may still access any of the publicly available docket materials through EPA Dockets. Once in the system, select ''search,'' then key in the appropriate docket identification number.

Worldwide Web (WWW). In addition to being available in the docket, an electronic copy of the final rule will also be available on the WWW through the Technology Transfer Network (TTN). Following signature, a copy of the final rule will be posted on the TTN's policy and guidance page for newly proposed or promulgated rules at *http://www.epa.gov/ttn/oarpg.* The TTN provides information and technology exchange in various areas of air pollution control. If more information

regarding the TTN is needed, call the TTN HELP line at (919) 541–5384.

Judicial Review. Under CAA section 307(b)(1), judicial review of the final NESHAP is available only by filing a petition for review in the U.S. Court of Appeals for the District of Columbia Circuit by December 9, 2003. Only those objections to the NESHAP which were raised with reasonable specificity during the public comment period may be raised during judicial review. Under CAA section 307(b)(2), the requirements established by today's final action may not be challenged separately in any civil or criminal proceeding brought by the EPA to enforce these requirements.

Outline. The information presented in this preamble is organized as follows:

I. Background
II. Summary of the Final Rule
A. What are the affected sources and emission points?
B. What are the compliance deadlines?
C. What are the emission limitations and work practice standards?
D. What are the operation and maintenance requirements?
E. What are the initial compliance requirements?
F. What are the continuous compliance requirements?
G. What are the notification, recordkeeping, and reporting requirements?
III. Summary of Responses to Major Comments
IV. Summary of Environmental, Energy, and Economic Impacts
V. Statutory and Executive Order Reviews
A. Executive Order 12866: Regulatory Planning and Review
B. Paperwork Reduction Act
C. Regulatory Flexibility Act
D. Unfunded Mandates Reform Act
E. Executive Order 13132: Federalism
F. Executive Order 13175: Consultation and Coordination with Indian Tribal Governments
G. Executive Order 13045: Protection of Children From Environmental Health & Safety Risks
H. Executive Order 13211: Actions That Significantly Affect Energy Supply, Distribution, or Use
I. National Technology Transfer Advancement Act
J. Congressional Review Act

I. Background

Section 112 of the CAA requires us to list categories and subcategories of major sources and area sources of HAP and to establish NESHAP for the listed source categories and subcategories. The category of major sources covered by today's final NESHAP for Primary Magnesium Refining, was listed on July 16, 1992 (57 FR 31576). Major sources of HAP are those that emit or have the potential to emit greater than 10 tons per year (tpy) of any one HAP or 25 tpy of any combination of HAP. Additional information on the NESHAP development process can be found in the preamble to the proposed rule (68 FR 2970).

We received one letter with substantive comments on the proposed NESHAP. Today's final rule reflects our full consideration of the comments we received. Additional information is available in the Response to Comments document in Docket No. OAR–2002–0043.

In addition to responding to comments, we made two minor clarifications from the proposed rule that are discussed in the final rule summary. These minor clarifications are not new requirements but simply ensure consistency in the final rule.

II. Summary of the Final Rule

A. What Are the Affected Sources and Emission Points?

The affected source is each new or existing primary magnesium refining facility. An existing affected source is one constructed or reconstructed on or before January 22, 2003. We have identified one existing affected source (US Magnesium Corporation) that will be subject to the final rule. This plant produces magnesium from brine (salt water) taken from the Great Salt Lake. A new affected source is one constructed or reconstructed after January 22, 2003. The final rule covers emissions from spray dryers, the melt reactor system, the launder off-gas system, and magnesium chloride storage bins. The final rule also covers fugitive dust emissions.

B. What Are the Compliance Deadlines?

The owner or operator of an existing affected source must comply by October 11, 2004. New or reconstructed sources that startup on or before October 10, 2003 must comply by October 10, 2003. New or reconstructed sources that startup after October 10, 2003 must comply upon initial startup.

C. What Are the Emission Limitations and Work Practice Standards?

The final rule includes mass rate emission limits in pounds per hour (lbs/hr) for chlorine, hydrochloric acid (HCl), particulate matter (PM), and particulate matter less than 10 microns (PM_{10}). Additional emission limits in grains per dry standard cubic foot (gr/dscf) apply to magnesium chloride storage bins. We clarified that both the mass emission rate limit and concentration limit for PM_{10} and HC1 apply to emissions from magnesium chloride storage bins. This clarification was made to be consistent with the requirements in the current operating permit for the affected source. The emission limits are shown in Table 1 of this preamble.

TABLE 1.—MASS RATE EMISSION LIMITS (LBS/HR)

Emission point	Chlorine	HCl	PM	PM_{10}
Spray dryers		200	100	
Magnesium chloride storage bins [1]		47.5		2.7
Melt/reactor system	100	7.2		13.1
Launder off-gas system	26.0	46.0	37.5	

[1] Additional limits are 0.35 gr/dscf of HCl and 0.016 gr/dscf of PM_{10}.

The final rule also includes an emission limit for each melt/reactor system of 36 nanograms of dioxin/furan toxicity equivalents per dry standard cubic meter (ng TEQ/dscm) corrected to 7 percent oxygen. Dioxins/furans include a group of 17 chemicals or congeners that share certain similar chemical structures and biological characteristics. The 2,3,7,8-tetrachlorodibenzo-p-dioxin (TCDD) congener is the most well studied and the most toxic of these compounds. Scientists believe that dioxins cause effects in similar ways. Because of this and because exposure is typically to variable mixtures of dioxin-like compounds, we use toxicity equivalency factors (TEF) that compare the potential toxicity of each of the individual dioxin-like compounds to the relative toxicity of TCDD. With such factors, the toxicity for a mixture can be expressed in terms of its TEQ, which is the amount of TCDD it would take to equal the combined toxic effect of all the dioxin-like compounds found in the

mixture. To calculate the TEQ, the concentration of each dioxin-like compound is multiplied by its respective TEF. We examined a beyond-the-floor alternative for dioxins/furans and determined that the high cost coupled with the small reduction in dioxin/furan emissions does not justify the beyond-the-floor alternative.

The emission limitations include operating limits for control devices. All owners or operators using a wet scrubber to meet an emission limit in the final rule must establish and meet operating limits for pressure drop and scrubber water flow rate.

The work practice standards require owners or operators to prepare a written plan that describes the measures that will be used to control fugitive dust emissions from all unpaved roads and other unpaved operational areas. The fugitive dust emissions control plan must be approved by the Administrator, and the requirement to operate according to the provisions in the plan must be incorporated by reference in the title V operating permit. In the final rule, we clarified the compliance and recordkeeping requirements for the fugitive dust control plan to be consistent with the work practice requirements in general, such as those in the operation and maintenance plan. The control of fugitive dust emissions will reduce PM which is a surrogate for metal HAP.

D. What Are the Operation and Maintenance Requirements?

All owners or operators of plants subject to the final rule are required to prepare and implement a written startup, shutdown, and malfunction plan according to the requirements in § 63.6(e) of the NESHAP General Provisions (40 CFR part 63, subpart A). A written operation and maintenance plan is also required for control devices subject to an operating limit. The plan must describe procedures for monthly inspections and preventative maintenance requirements for control devices.

E. What Are the Initial Compliance Requirements?

The final rule requires a performance test for each control device to demonstrate initial compliance with the applicable emission limits of chlorine, HCl, PM, PM_{10}, and dioxin/furan. The EPA Method 26 or 26A in 40 CFR part 60, appendix A, is the reference method for chlorine and HCl. The reference method for PM is EPA Method 5 or 5D in 40 CFR part 60, appendix A. The reference method for PM_{10} is EPA Method 201 or 201A in 40 CFR part 60, appendix A. The EPA Method 23 of 40 CFR part 60, appendix A, is the reference method for dioxin/furan. The final rule also requires owners or operators to establish operating limits for scrubber pressure drop and scrubber water flow rate concurrent with the initial performance tests.

F. What Are the Continuous Compliance Requirements?

The final rule requires primary magnesium refineries to conduct performance tests at least twice during each title V operating permit term (at midterm and renewal) to demonstrate continuous compliance with the emission limits. Owners or operators are also required to monitor operating parameters for control devices subject to operating limits and carry out the procedures in their fugitive dust emissions control plan and their operation and maintenance plan.

For wet scrubbers, owners or operators are required to use continuous parameter monitoring systems (CPMS) to measure and record the hourly average pressure drop and scrubber water flow rate. To demonstrate continuous compliance, owners or operators must keep records documenting conformance with the monitoring requirements and the installation, operation, and maintenance requirements for CPMS.

G. What Are the Notification, Recordkeeping, and Reporting Requirements?

We selected the notification, recordkeeping, and reporting requirements to be consistent with the NESHAP General Provisions (40 CFR part 63, subpart A). One-time notifications are required by EPA to know what facilities are subject to the final standards, if a facility has complied with the final rule requirements, and when certain events, such as performance tests, are scheduled. Semiannual compliance reports containing information on any deviation from the final rule requirements are also required. These reports include information on any deviation that occurred during the reporting period; if no deviation occurred, only summary information is required. Consistent with the NESHAP General Provisions, we also require an immediate report of any startup, shutdown, or malfunction where the actions taken in response were not consistent with the startup, shutdown, and malfunction plan. This information is needed to determine if changes need to be made to the plan. By-passing the control device for maintenance activities is not considered a startup, shutdown, or malfunction event. Records of information needed to document compliance with the final rule requirements are required. These notifications, reports, and records are the minimum needed to ensure initial and continuous compliance.

III. Summary of Responses to Major Comments

We received substantive comments from only one commenter, and this commenter represents the primary magnesium plant affected by the final rule.

Comment: The commenter stated that a dioxin/furan emission limit is not appropriate for the primary magnesium industry because EPA has applied these limits primarily to facilities that burn wastes. Other industries, such as petroleum refineries and iron and steel foundries, are known to emit dioxin/furan; however, EPA did not propose limits for them. The commenter also stated that the dioxin/furan limit cannot be justified on the basis of health risk because the facility is in a remote location, and the nearest resident is 25 miles away. The commenter recommended that EPA use PM as a surrogate for dioxin/furan emissions from the melt reactor because: EPA established MACT for dioxin/furan as the PM control devices on the melt reactor, PM is used as a surrogate for other pollutants in the final rule and has been used as a surrogate for dioxin/furan in other rules, the dioxin/furan emissions are mainly in particulate form, the dioxin/furan limit will obtain no additional reduction beyond that obtained using PM as a surrogate, and the dioxin/furan limit will add significantly to the cost of stack testing with no apparent gain.

Response: We set a dioxin/furan limit because it is a HAP of concern with respect to toxicity. We have adequate test data (two tests composed of three runs each) to characterize emission control performance, and dioxin/furan formation and control is not always correlated to PM formation and control. First, the formation of dioxin/furans in combustion devices with an available source of chlorine is well documented, and it is not a concern only for facilities that burn waste. The test data from this industry confirm the formation and emissions of dioxin/furans from this emissions source. Second, we do not agree that the control device for PM will adequately control the emissions of dioxin/furans. There are factors other than the PM control device which may affect the formation and control of dioxin/furan, such as the composition

and concentrations of precursors, temperature, and process conditions. Dioxins are formed in acid gases leaving the combustion device, and the means of control is not necessarily the particulate control system but quenching of gases to control the temperature in the device (to assure that temperature does not fall in the range which optimizes dioxin/furan formation).

The MACT control system for dioxin/furans is the entire scrubber train—the packed tower scrubbers (for HCl control) and the venturi scrubber (for PM control)—and not just the PM control device. That is, the control of dioxin/furans includes the rapid cooling of the exhaust gas that occurs in the packed tower absorbers, which limits the dioxin/furan formation. Therefore, we believe a dioxin/furan limit is necessary to ensure that process and control device operations do not change in the future in a manner that might increase the formation and release of dioxin/furan, even if the overall PM control level remains the same.

The dioxin/furan emission limit is not based on a determination that health risks exist; it is based on technology and the floor level of control that has been achieved. Stack testing every 2.5 years is not costly or unreasonable to provide assurance that the dioxin/furan limit is being achieved. Moreover, the commenter did not provide any information as to how this stack testing will add significantly to the costs of compliance with the final NESHAP.

Comment: The commenter disagreed with the approach used to set the emission limit for dioxin/furan and claimed it does not provide a reasonable margin of safety to ensure continuous compliance. The commenter suggests that a limit of 50 ng TEQ/dscm is statistically valid. However, the commenter recommended that a minimum safety factor of three be applied to the average of results from the two stack tests (21.5 ng TEQ/dscm) to develop a limit of 65 ng TEQ/dscm rather than a limit of 36 ng TEQ/dscm as proposed. The commenter stated this is reasonable because of the high variability in the test results and because of the inherent inaccuracies in the dioxin/furan sampling and analysis, especially at these extremely low levels of detection.

Response: We chose 36 ng TEQ/dscm because it was the highest result from any of the six runs. This approach accounts for inherent variability, and an additional margin of safety is provided by determining compliance from the average of three runs. The commenter estimated the 99th percentile for single test runs. The variability of the average of three runs is more appropriate than the variability of a single test run because compliance is determined from the average of three test runs rather than for each single test run.

To illustrate the impact of using the average of three runs, we performed a Monte Carlo simulation of 5,000 runs based on a normal distribution developed from the test results for six runs. From the simulation, the 99th percentile for individual runs was 44 ng TEQ/dscm compared to a 99th percentile of 32 ng TEQ/dscm for the average of three runs. Consequently, since the emission limit is enforced based on three-run averages, the proposed limit of 36 ng TEQ/dscm is close to the 99th percentile of performance. We believe that the limit as proposed (and included in the final rule) is achievable, and the simulation indicates it accounts for variability.

The commenter mentioned process variability and uncertainty associated with sampling and analysis as reasons for a higher limit. However, the variability in the process, sampling, and analysis are inherently included in the runs we used to derive the limit and using the highest run accommodates this variability. In addition, there is no need to artificially increase the limit by multiplying the average of the test results by three because the statistical simulation shows that the proposed limit is reasonable. With testing performed every 2.5 years and a limit at about the 99th percentile, the limit would be exceeded no more than once every 250 years if the process and control device are operated as they were during the two performance tests.

While we were evaluating the data discussed by the commenter, we discovered an error in the 1998 test report. The test contractor inadvertently switched the TEF for two congeners. The net effect is that the overall average for six runs is 18 ng TEQ/dscm instead of 21.5 ng TEQ/dscm. This correction had no effect on the highest run and did not change the limit that was originally proposed.

Comment: The commenter stated that the World Health Organization's 1998 TEF scheme should be used to assign toxic equivalency, and this scheme should be stated in the final rule.

Response: Based on our dioxin reassessment report, we agree with the commenter and have incorporated the updated TEF scheme in the final rule. The effect on the test results was small, and the highest run remained at 36 ng TEQ/dscm. Consequently, the level of the final standard remains as proposed.

IV. Summary of Environmental, Energy and Economic Impacts

Generally, we do not expect the impacts of the final rule to be very significant. Currently, the one operating primary magnesium plant has all of the required air pollution control equipment in place and operating. The only impacts will be the estimated cost of $43,000 for the additional monitoring, recordkeeping and reporting requirements required by the final rule.

V. Statutory and Executive Order Reviews

A. Executive Order 12866: Regulatory Planning and Review

Under Executive Order 12866 (58 FR 51735, October 4, 1993), the EPA must determine whether the regulatory action is ''significant'' and, therefore, subject to review by the Office of Management and Budget (OMB) and the requirements of the Executive Order. The Executive Order defines a ''significant regulatory action'' as one that is likely to result in a rule that may:

(1) Have an annual effect on the economy of $100 million or more or adversely affect in a material way the economy, a sector of the economy, productivity, competition, jobs, the environment, public health or safety, or State, local, or tribal governments or communities;

(2) create a serious inconsistency or otherwise interfere with an action taken or planned by another agency;

(3) materially alter the budgetary impact of entitlement, grants, user fees, or loan programs or the rights and obligations of recipients thereof; or

(4) raise novel legal or policy issues arising out of legal mandates, the President's priorities, or the principles set forth in the Executive Order.

It has been determined that the final rule is not a ''significant regulatory action'' under the terms of Executive Order 12866, and is therefore not subject to OMB review.

B. Paperwork Reduction Act

The information collection requirements in the final rule have been submitted for approval to OMB under the Paperwork Reduction Act, 44 U.S.C. 3501 *et seq.* (ICR 2098.02). The information collection requirements are not enforceable until OMB approves them.

The information requirements in the final rule are based on notification, recordkeeping, and reporting requirements in the NESHAP General Provisions (40 CFR part 63, subpart A), which are mandatory for all operators

subject to NESHAP. The records and reports required by the final rule are necessary for EPA to identify major sources and new or reconstructed sources subject to the rule, ensure that MACT is being properly applied, and ensure that the emission control devices are being properly operated and maintained on a continuous basis. Based on the reported information, EPA can decide which plants, records, or processes should be inspected. These recordkeeping and reporting requirements are specifically authorized by section 112 of the CAA (42 U.S.C. 7414). All information submitted to the EPA pursuant to the recordkeeping and reporting requirements for which a claim of confidentiality is made is safeguarded according to Agency policies in 40 CFR part 2, subpart B.

The annual average public reporting and recordkeeping burden for this collection of information over the first 3 years of the information collection request (ICR) is estimated to total 731 labor hours per year. This includes six responses per year from one respondent with an average of 122 hours per response. The total annualized cost burden to the facility is estimated at $43,000, including labor, capital, and operation and maintenance. No additional capital cost for monitoring devices or annual costs for operation and maintenance costs are attributable to the final rule because the affected plant has already installed all continuous monitoring systems as a result of State requirements.

Burden means the total time, effort, or financial resources expended by persons to generate, maintain, retain, or disclose or provide information to or for a Federal agency. This includes the time needed to review instructions; develop, acquire, install, and utilize technology and systems for the purpose of collecting, validating, and verifying information, processing and maintaining information, and disclosing and providing information; adjust the existing ways to comply with any previously applicable instructions and requirements; train personnel to respond to a collection of information; search data sources; complete and review the collection of information; and transmit or otherwise disclose the information.

An Agency may not conduct or sponsor, and a person is not required to respond to, a collection of information unless it displays a currently valid OMB control number. The OMB control number for EPA's regulations in 40 CFR part 63 are listed in 40 CFR part 9. When the ICR is approved by OMB, the Agency will publish a technical amendment to 40 CFR part 9 in the **Federal Register** to display the OMB control number for the approved information collection requirements contained in the final rule.

C. Regulatory Flexibility Act

The EPA has determined that it is not necessary to prepare a regulatory flexibility analysis in connection with the final rule. The EPA has also determined that the final rule will not have a significant economic impact on a substantial number of small entities. For purposes of assessing the impacts of today's final rule on small entities, small entity is defined as: (1) A small business according to Small Business Administration (SBA) size standards for NAICS code 331419 (*i.e.*, Primary Magnesium Refining) of 1,000 or fewer employees; (2) a small governmental jurisdiction that is a government of a city, county, town, school district or special district with a population of less than 50,000; and (3) a small organization that is any not-for-profit enterprise which is independently owned and operated and is not dominant in its field.

After considering the economic impacts of today's final rule on small entities, EPA has concluded that this action will not have a significant economic impact on a substantial number of small entities. Based on the above definition of small entities, no small entities are subject to the final rule and its requirements.

D. Unfunded Mandates Reform Act

Title II of the Unfunded Mandates Reform Act of 1995 (UMRA), Public Law 104–4, establishes requirements for Federal agencies to assess the effects of their regulatory actions on State, local, and tribal governments and the private sector. Under section 202 of the UMRA, the EPA generally must prepare a written statement, including a cost-benefit analysis, for proposed and final rules with ''Federal mandates'' that may result in expenditures by State, local, and tribal governments, in the aggregate, or by the private sector, of $100 million or more in any 1 year. Before promulgating an EPA rule for which a written statement is needed, section 205 of the UMRA generally requires the EPA to identify and consider a reasonable number of regulatory alternatives and adopt the least costly, most cost-effective, or least-burdensome alternative that achieves the objectives of the rule. The provisions of section 205 do not apply when they are inconsistent with applicable law. Moreover, section 205 allows the EPA to adopt an alternative other than the least-costly, most cost-effective, or least-burdensome alternative if the Administrator publishes with the final rule an explanation why that alternative was not adopted. Before the EPA establishes any regulatory requirements that may significantly or uniquely affect small governments, including tribal governments, it must have developed under section 203 of the UMRA a small government agency plan. The plan must provide for notifying potentially affected small governments, enabling officials of affected small governments to have meaningful and timely input in the development of EPA regulatory proposals with significant Federal intergovernmental mandates, and informing, educating, and advising small governments on compliance with the regulatory requirements.

Today's final rule contains no Federal mandate (under the regulatory provisions of the UMRA) for State, local, or tribal governments. The EPA has determined that the final rule does not contain a Federal mandate that may result in estimated costs of $100 million or more to either State, local, or tribal governments, in the aggregate, or to the private sector in any 1 year. The maximum total annual cost of the final rule for any year has been estimated to be less than $48,000. Thus, the final rule is not subject to sections 202 and 205 of the UMRA. In addition, the EPA has determined that the final rule contains no regulatory requirements that might significantly or uniquely affect small governments because it contains no requirements that apply to such governments or impose obligations upon them. Therefore, today's final rule is not subject to the requirements of section 203 of the UMRA.

E. Executive Order 13132: Federalism

Executive Order 13132 (64 FR 43255, August 10, 1999) requires EPA to develop an accountable process to ensure ''meaningful and timely input by State and local officials in the development of regulatory policies that have federalism implications.'' ''Policies that have federalism implications'' is defined in the Executive Order to include regulations that have ''substantial direct effects on the States, on the relationship between the national government and the States, or on the distribution of power and responsibilities among the various levels of government.''

The final rule does not have federalism implications. It will not have substantial direct effects on the States, on the relationship between the national government and the States, or on the distribution of power and

responsibilities among the various levels of government, as specified in Executive Order 13132. None of the affected facilities are owned or operated by State governments. Thus, Executive Order 13132 does not apply to the final rule.

F. Executive Order 13175: Consultation and Coordination With Indian Tribal Governments

Executive Order 13175 (65 FR 67249, November 6, 2000), requires the EPA to develop an accountable process to ensure ''meaningful and timely input by tribal officials in the development of regulatory policies that have tribal implications.''

The final rule does not have tribal implications, as specified in Executive Order 13175. It will not have substantial direct effects on tribal governments, on the relationship between the Federal government and Indian tribes, or on the distribution of power and responsibilities between the Federal government and Indian tribes. No tribal governments own facilities subject to the final rule. Thus, Executive Order 13175 does not apply to the final rule.

G. Executive Order 13045: Protection of Children From Environmental Health & Safety Risks

Executive Order 13045 (62 FR 19885, April 23, 1997) applies to any rule that: (1) Is determined to be ''economically significant,'' as defined under Executive Order 12866, and (2) concerns an environmental health or safety risk that EPA has reason to believe may have a disproportionate effect on children. If the regulatory action meets both criteria, the EPA must evaluate the environmental health or safety effects of the planned rule on children and explain why the planned regulation is preferable to other potentially effective and reasonably feasible alternatives considered by the Agency.

The EPA interprets Executive Order 13045 as applying only to those regulatory actions that are based on health or safety risks, such that the analysis required under section 5–501 of the Executive Order has the potential to influence the regulation. The final rule is not subject to Executive Order 13045 because it is based on technology and not on health or safety risks.

H. Executive Order 13211: Actions That Significantly Affect Energy Supply, Distribution, or Use

The final rule is not subject to Executive Order 13211 (66 FR 28355, May 22, 2001) because it is not a significant regulatory action under Executive Order 12866.

I. National Technology Transfer Advancement Act

Section 12(d) of the National Technology Transfer and Advancement Act (NTTAA) of 1995 (Public Law 104–113; 15 U.S.C 272 *note*), directs the EPA to use voluntary consensus standards in their regulatory and procurement activities unless to do so would be inconsistent with applicable law or otherwise impracticable. Voluntary consensus standards are technical standards (such as material specifications, test methods, sampling procedures, business practices) developed or adopted by one or more voluntary consensus standard bodies. The NTTAA directs EPA to provide Congress, through annual reports to OMB, with explanations when an agency does not use available and applicable voluntary consensus standards.

The final rule involves technical standards. Therefore, the EPA conducted a search to identify potentially applicable voluntary consensus standards. However, we identified no such standards as alternatives to EPA Methods 1, 2, 2F, 2G, 3, 3A, 3B, 4, 5, 5D, 23, 26, 26A, 201, and 201A and none were brought to our attention in comments. The search and review results are available in Docket OAR–2002–0043.

J. Congressional Review Act

The Congressional Review Act, 5 U.S.C. 801 *et seq.*, as added by the Small Business Regulatory Enforcement Act of 1996, generally provides that before a rule may take effect, the agency promulgating the rule must submit a rule report, which includes a copy of the rule, to each House of the Congress and to the Comptroller General of the United States. The EPA will submit a report containing the final rule and other required information to the U.S. Senate, the U.S. House of Representatives, and the Comptroller General of the United States prior to publication of the final rule in the **Federal Register**. The final rule is not a ''major rule'' as defined by 5 U.S.C. 804(2).

List of Subjects in 40 CFR Part 64

Environmental protection, Air pollution control, Hazardous substances, Reporting and recordkeeping requirements.

Dated: August 25, 2003.

Marianne Lamont Horinko,

Acting Administrator.

■ For the reasons stated in the preamble, title 40, chapter I, part 63 of the Code of the Federal Regulations is amended as follows:

PART 63—[AMENDED]

■ 1. The authority citation for part 63 continues to read as follows:

Authority: 42 U.S.C. 7401, *et seq.*

■ 2. Part 63 is amended by adding subpart TTTTT to read as follows:

Subpart TTTTT—National Emissions Standards for Hazardous Air Pollutants for Primary Magnesium Refining

Sec.

What This Subpart Covers

63.9880 What is the purpose of this subpart?
63.9881 Am I subject to this subpart?
63.9882 What parts of my plant does this subpart cover?
63.9883 When do I have to comply with this subpart?

Emission Limitations and Work Practice Standards

63.9890 What emission limitations must I meet?
63.9891 What work practice standards must I meet for my fugitive dust sources?

Operation and Maintenance Requirements

63.9900 What are my operation and maintenance requirements?

General Compliance Requirements

63.9910 What are my general requirements for complying with this subpart?

Initial Compliance Requirements

63.9911 By what date must I conduct performance tests or other initial compliance demonstrations?
63.9912 When must I conduct subsequent performance tests?
63.9913 What test methods and other procedures must I use to demonstrate initial compliance with the emission limits for particulate matter and PM_{10}?
63.9914 What test methods and other procedures must I use to demonstrate initial compliance with chlorine and hydrochloric acid emission limits?
63.9915 What test methods and other procedures must I use to demonstrate initial compliance with dioxin/furan emission limits?
63.9916 What test methods and other procedures must I use to establish and demonstrate initial compliance with the operating limits?
63.9917 How do I demonstrate initial compliance with the emission limitations and work practice standards that apply to me?
63.9918 How do I demonstrate initial compliance with the operation and maintenance requirements that apply to me?

Continuous Compliance Requirements

63.9920 What are my monitoring requirements?

63.9921 What are the installation, operation, and maintenance requirements for my monitors?
63.9922 How do I monitor and collect data to demonstrate continuous compliance?
63.9923 How do I demonstrate continuous compliance with the emission limitations and work practice standards that apply to me?
63.9924 How do I demonstrate continuous compliance with the operation and maintenance requirements that apply to me?
63.9925 What other requirements must I meet to demonstrate continuous compliance?

Notifications, Reports, and Records

63.9930 What notifications must I submit and when?
63.9931 What reports must I submit and when?
63.9932 What records must I keep?
63.9933 In what form and how long must I keep my records?

Other Requirements and Information

63.9940 What parts of the General Provisions apply to me?
63.9941 Who implements and enforces this subpart?
63.9942 What definitions apply to this subpart?

Tables to Subpart TTTTT of Part 63

Table 1 to Subpart TTTTT of Part 63—Emission Limits
Table 2 to Subpart TTTTT of Part 63—Toxic Equivalency Factors
Table 3 to Subpart TTTTT of Part 63—Initial Compliance with Emission Limits
Table 4 to Subpart TTTTT of Part 63—Continuous Compliance with Emission Limits
Table 5 to Subpart TTTTT of Part 63—Applicability of General Provisions to Subpart TTTTT of Part 63

What This Subpart Covers

§ 63.9880 What is the purpose of this subpart?

This subpart establishes national emission standards for hazardous air pollutants (NESHAP) for primary magnesium refineries. This subpart also establishes requirements to demonstrate initial and continuous compliance with all applicable emission limitations, work practice standards, and operation and maintenance requirements.

§ 63.9881 Am I subject to this subpart?

You are subject to this subpart if you own or operate a primary magnesium refinery that is (or is part of) a major source of hazardous air pollutant (HAP) emissions. Your primary magnesium refinery is a major source of HAP if it emits or has the potential to emit any single HAP at a rate of 10 tons or more per year or any combination of HAP at a rate of 25 tons or more per year.

§ 63.9882 What parts of my plant does this subpart cover?

(a) The affected sources are each new and existing primary magnesium refining facility.

(b) This subpart covers emissions from each spray dryer stack, magnesium chloride storage bins scrubber stack, melt/reactor system stack, and launder off-gas system stack at your primary magnesium refining facility. This subpart also covers fugitive dust emissions.

(c) Each primary magnesium refining facility is existing if you commenced construction or reconstruction of the affected source before January 22, 2003.

(d) Each primary magnesium refining facility is new if you commence construction or reconstruction of the affected source on or after January 22, 2003. An affected source is reconstructed if it meets the definition of reconstruction in § 63.2.

§ 63.9883 When do I have to comply with this subpart?

(a) If you have an existing source, you must comply with each emission limitation, work practice standard, and operation and maintenance requirement in this subpart that applies to you no later than October 11, 2004.

(b) If you have a new affected source and its initial startup date is on or before October 11, 2003, you must comply with each emission limitation, work practice standard, and operation and maintenance requirement in this subpart that applies to you by October 10, 2003.

(c) If you have a new affected source and its initial startup date is after October 10, 2003, you must comply with each emission limitation, work practice standard, and operation and maintenance requirement in this subpart that applies to you upon initial startup.

(d) If your primary magnesium refinery is an area source that becomes a major source of HAP, the compliance dates in paragraphs (d)(1) and (2) of this section apply to you:

(1) Any portion of the existing primary magnesium refinery that is a new affected source or a new reconstructed source must be in compliance with this subpart upon startup.

(2) All other parts of the primary magnesium refinery must be in compliance with this subpart no later than 2 years after it becomes a major source.

(e) You must meet the notification and schedule requirements in § 63.9930. Several of these notifications must be submitted before the compliance date for your affected source.

Emission Limitations and Work Practice Standards

§ 63.9890 What emission limitations must I meet?

(a) You must meet each emission limit in Table 1 to this subpart that applies to you.

(b) For each wet scrubber applied to meet any particulate matter, particulate matter less than 10 microns (PM_{10}), chlorine, hydrochloric acid, or dioxins/furans emission limit in Table 1 to this subpart, you must maintain the hourly average pressure drop and scrubber liquid flow rate at or above the minimum level established during the initial or subsequent performance test.

§ 63.9891 What work practice standards must I meet for my fugitive dust sources?

(a) You must prepare and at all times operate according to a fugitive dust emissions control plan that describes in detail the measures that will be put in place to control fugitive dust emissions from all unpaved roads and other unpaved operational areas.

(b) You must submit a copy of your fugitive dust emissions control plan for approval to the Administrator on or before the applicable compliance date for the affected source as specified in § 63.9883. The requirement to operate according to the fugitive dust emissions control plan must be incorporated by reference in the source's operating permit issued by the permitting authority under 40 CFR part 70 or 40 CFR part 71.

(c) You can use an existing fugitive dust emissions control plan provided it meets the requirements in paragraphs (c)(1) through (3) of this section.

(1) The plan satisfies the requirements of paragraph (a) of this section.

(2) The plan describes the current measures to control fugitive dust emission sources.

(3) The plan has been approved as part of a State implementation plan or title V permit.

(d) You must maintain a current copy of the fugitive dust emissions control plan on-site and available for inspection upon request. You must keep the plan for the life of the affected source or until the affected source is no longer subject to the requirements of this subpart.

Operation and Maintenance Requirements

§ 63.9900 What are my operation and maintenance requirements?

(a) As required by § 63.6(e)(1)(i), you must always operate and maintain your affected source, including air pollution

control and monitoring equipment, in a manner consistent with good air pollution control practices for minimizing emissions at least to the levels required by this subpart.

(b) You must prepare and operate at all times according to a written operation and maintenance plan for each control device subject to an operating limit in § 63.9890(b). Each plan must address preventative maintenance for each control device, including a preventative maintenance schedule that is consistent with the manufacturer's instructions for routine and long-term maintenance.

(c) You must maintain a current copy of the operation and maintenance plan required in paragraph (b) of this section on-site and available for inspection upon request. You must keep the plan for the life of the affected source or until the affected source is no longer subject to the requirements of this subpart.

General Compliance Requirements

§ 63.9910 What are my general requirements for complying with this subpart?

(a) You must be in compliance with the emission limitations, work practice standards, and operation and maintenance requirements in this subpart at all times, except during periods of startup, shutdown, and malfunction as defined in § 63.2.

(b) You must develop and implement a written startup, shutdown and malfunction plan according to the provisions in § 63.6(e)(3).

Initial Compliance Requirements

§ 63.9911 By what date must I conduct performance tests or other initial compliance demonstrations?

(a) As required in § 63.7(a)(2), you must conduct a performance test to demonstrate initial compliance with each emission limit in Table 1 to this subpart that applies to you as indicated in paragraphs (a)(1) through (3) of this section:

(1) Within 180 calendar days after the compliance date that is specified in § 63.9883 for your existing affected source;

(2) By April 7, 2004 for a new source that has an initial startup date before October 10, 2003; or

(3) Within 180 days after initial startup for a new source that has an initial startup date after October 10, 2003.

(b) For each operation and maintenance requirement that applies to you where initial compliance is not demonstrated using a performance test, you must demonstrate initial compliance within 30 calendar days after the compliance date that is specified for your affected source in § 63.9883.

(c) If you commenced construction or reconstruction between January 22, 2003 and October 10, 2003, you must demonstrate initial compliance with either the proposed emission limitation or the promulgated emission limitation no later than April 7, 2004 or no later than 180 calendar days after startup of the source, whichever is later, according to § 63.7(a)(2)(ix).

(d) If you commenced construction or reconstruction between January 22, 2003 and October 10, 2003, and you chose to comply with the proposed emission limit when demonstrating initial compliance, you must conduct a second performance test to demonstrate compliance with the promulgated emission limit by April 11, 2005, or after startup of the source, whichever is later, according to § 63.7(a)(2)(ix).

§ 63.9912 When must I conduct subsequent performance tests?

You must conduct subsequent performance tests to demonstrate continuous compliance with all applicable emission limits in Table 1 to this subpart no less frequently than twice (at mid-term and renewal) during each term of your title V operating permit.

§ 63.9913 What test methods and other procedures must I use to demonstrate initial compliance with the emission limits for particulate matter and PM_{10}?

(a) You must conduct each performance test that applies to your affected source according to the requirements in § 63.7(e)(1).

(b) To determine compliance with the applicable emission limits for particulate matter in Table 1 to this subpart, you must follow the test methods and procedures in paragraphs (b)(1) and (2) of this section.

(1) Determine the concentration of particulate matter according to the following test methods in appendix A to 40 CFR part 60:

(i) Method 1 to select sampling port locations and the number of traverse points. Sampling ports must be located at the outlet of the control device and prior to any releases to the atmosphere.

(ii) Method 2, 2F, or 2G to determine the volumetric flow rate of the stack gas.

(iii) Method 3, 3A, or 3B to determine the dry molecular weight of the stack gas.

(iv) Method 4 to determine the moisture content of the stack gas.

(v) Method 5 or 5D, as applicable, to determine the concentration of particulate matter.

(vi) Method 201 or 201A, as applicable, to determine the concentration of PM_{10}.

(2) Collect a minimum sample volume of 60 dry standard cubic feet (dscf) during each particulate matter or PM_{10} test run. Three valid test runs are needed to comprise a performance test.

(c) Compute the mass emissions rate in pounds per hour (lbs/hr) for each test run using Equation 1 of this section:

$$E_{lbs/hr} = \frac{C_s \times Q_{std} \times 60}{7{,}000} \qquad \text{(Eq. 1)}$$

Where:

$E_{lbs/hr}$ = Mass emissions rate of particulate matter or PM_{10} (lbs/hr);

C_s = Concentration of particulate matter or PM_{10} in the gas stream, grains per dry standard cubic feet (gr/dscf);

Q_{std} = Volumetric flow rate of stack gas, dry standard cubic feet per minute (dscfm);

60 = Conversion factor, minutes per hour (min/hr); and

7,000 = Conversion factor, grains per pound (gr/lb).

§ 63.9914 What test methods and other procedures must I use to demonstrate initial compliance with chlorine and hydrochloric acid emission limits?

(a) You must conduct each performance test that applies to your affected source according to the requirements in § 63.7(e)(1).

(b) To determine compliance with the applicable emission limits for chlorine and hydrochloric acid in Table 1 to this subpart, you must follow the test methods and procedures specified in paragraphs (b)(1) and (2) of this section.

(1) Determine the concentration of chlorine and hydrochloric acid according to the following test methods in appendix A to 40 CFR part 60:

(i) Method 1 to select sampling port locations and the number of traverse points. Sampling ports must be located at the outlet of the control device and prior to any releases to the atmosphere.

(ii) Method 2, 2F, or 2G to determine the volumetric flow of the stack gas.

(iii) Method 3, 3A, or 3B to determine the dry molecular weight of the stack gas.

(iv) Method 4 to determine the moisture content of the stack gas.

(v) Method 26 or 26A, as applicable, to determine the concentration of hydrochloric acid and chlorine.

(2) Collect a minimum sample of 60 dscf during each test run for chlorine and hydrochloric acid. Three valid test runs are needed to comprise a performance test.

(c) Compute the mass emissions rate (lbs/hr) for each test run using Equation 1 of this section:

$$E_{lbs/hr} = \frac{C_s \times Q_{std} \times 60}{35.31 \times 454{,}000} \quad \text{(Eq. 1)}$$

Where:

$E_{lbs/hr}$ = Mass emissions rate of chlorine or hydrochloric acid (lbs/hr);

C_s = Concentration of chlorine or hydrochloric acid in the gas stream, milligrams per dry standard cubic meter (mg/dscm);

Q_{std} = Volumetric flow rate of stack gas (dscfm);

60 = Conversion factor (min/hr);

35.31 = Conversion factor (dscf/dscm); and

454,000 = Conversion factor (mg/lb).

§ 63.9915 What test methods and other procedures must I use to demonstrate initial compliance with dioxin/furan emission limits?

(a) You must conduct each performance test that applies to your affected source according to the requirements in § 63.7(e)(1).

(b) To determine compliance with the applicable emission limit for dioxins/furans in Table 1 to this subpart, you must follow the test methods and procedures specified in paragraphs (b)(1) and (2) of this section.

(1) Determine the concentration of dioxin and furan according to the following test methods in appendix A to 40 CFR part 60:

(i) Method 1 to select sampling port locations and the number of traverse points. Sampling ports must be located at the outlet of the control device and prior to any releases to the atmosphere.

(ii) Method 2, 2F, or 2G to determine the volumetric flow of the stack gas.

(iii) Method 3, 3A, or 3B to determine the dry molecular weight of the stack gas.

(iv) Method 4 to determine the moisture content of the stack gas.

(v) Method 23 to determine the concentration of dioxins/furans. For each dioxin/furan congener measured in accordance with this paragraph (b)(v), multiply the congener concentration by its corresponding toxic equivalency factor specified in Table 2 of this subpart.

(2) Collect a minimum sample of 100 dscf during each test run. Three valid test runs are needed to comprise a performance test.

§ 63.9916 What test methods and other procedures must I use to establish and demonstrate initial compliance with the operating limits?

For a wet scrubber subject to operating limits for pressure drop and scrubber water flow rate in § 63.9890(b), you must establish site-specific operating limits according to the procedures in paragraphs (a) and (b) of this section.

(a) Using the continuous parameter monitoring system (CPMS) required in § 63.9920, measure and record the pressure drop and scrubber water flow rate at least every 15 minutes during each run of the particulate matter performance test.

(b) Compute and record the average pressure drop and scrubber water flow rate for each individual test run. Your operating limits are the lowest average individual pressure drop and scrubber water flow rate values in any of the three runs that meet the applicable emission limit.

§ 63.9917 How do I demonstrate initial compliance with the emission limitations and work practice standards that apply to me?

(a) For each affected source subject to an emission limit in Table 1 to this subpart, you have demonstrated initial compliance if:

(1) You have met the conditions in Table 3 to this subpart; and

(2) For each wet scrubber subject to the operating limits for pressure drop and scrubber water flow rate in § 63.9890(b), you have established appropriate site-specific operating limits and have a record of the pressure drop and scrubber water flow rate measured during the performance test in accordance with § 63.9916.

(b) You have demonstrated initial compliance with the work practice standards in § 63.9891 if you have certified in your notification of compliance status that:

(1) You have prepared a fugitive dust emissions control plan according to the requirements in § 63.9891 and submitted the plan for approval; and

(2) You will operate according to the requirements in the plan.

§ 63.9918 How do I demonstrate initial compliance with the operation and maintenance requirements that apply to me?

You must demonstrate initial compliance by certifying in your notification of compliance status that you have met the requirements in paragraphs (a) and (b) of this section.

(a) You have prepared the operation and maintenance plan according to the requirements in § 63.9910; and

(b) You will operate each control device according to the procedures in the plan.

Continuous Compliance Requirements

§ 63.9920 What are my continuous monitoring requirements?

For each wet scrubber subject to the operating limits for pressure drop and scrubber water flow rates in § 63.9890(b), you must at all times monitor the hourly average pressure drop and liquid flow rate using a CPMS according to the requirements in § 63.9921(a).

§ 63.9921 What are the installation, operation and maintenance requirements for my monitors?

(a) For each wet scrubber subject to the operating limits in § 63.9890(b) for pressure drop and scrubber water flow rate, you must install, operate, and maintain each CPMS according to the requirements in paragraphs (a)(1) and (2) of this section.

(1) For the pressure drop CPMS, you must:

(i) Locate the pressure sensor(s) in or as close to a position that provides a representative measurement of the pressure and that minimizes or eliminates pulsating pressure, vibration, and internal and external corrosion.

(ii) Use a gauge with a minimum measurement sensitivity of 0.5 inch of water or a transducer with a minimum measurement sensitivity of 1 percent of the pressure range.

(iii) Check the pressure tap for pluggage daily.

(iv) Using a manometer, check gauge calibration quarterly and transducer calibration monthly.

(v) Conduct calibration checks any time the sensor exceeds the manufacturer's specified maximum operating pressure range, or install a new pressure sensor.

(vi) At least monthly, inspect all components for integrity, all electrical connections for continuity, and all mechanical connections for leakage.

(2) For the scrubber water flow rate CPMS, you must:

(i) Locate the flow sensor and other necessary equipment in a position that provides a representative flow and that reduces swirling flow or abnormal velocity distributions due to upstream and downstream disturbances.

(ii) Use a flow sensor with a minimum measurement sensitivity of 2 percent of the flow rate.

(iii) Conduct a flow sensor calibration check at least semiannually according to the manufacturer's instructions.

(iv) At least monthly, inspect all components for integrity, all electrical connections for continuity, and all mechanical connections for leakage.

(b) You must install, operate, and maintain each CPMS for a wet scrubber according to the requirements in paragraphs (b)(1) through (3) of this section.

(1) Each CPMS must complete a minimum of one cycle of operation for each successive 15-minute period.

(2) Each CPMS must have valid data for at least 95 percent of every averaging period.

(3) Each CPMS must determine and record the hourly average of all recorded readings.

§ 63.9922 How do I monitor and collect data to demonstrate continuous compliance?

(a) Except for monitoring malfunctions, associated repairs, and required quality assurance or control activities (including, as applicable, calibration checks and required zero and span adjustments), you must monitor continuously (or collect data at all required intervals) at all times an affected source is operating.

(b) You may not use data recorded during monitoring malfunctions, associated repairs, and required quality assurance or control activities in data averages and calculations used to report emission or operating levels or to fulfill a minimum data availability requirement, if applicable. You must use all the data collected during all other periods in assessing compliance.

(c) A monitoring malfunction is any sudden, infrequent, not reasonably preventable failure of the monitoring to provide valid data. Monitoring failures that are caused in part by poor maintenance or careless operation are not malfunctions.

§ 63.9923 How do I demonstrate continuous compliance with the emission limitations and work practice standards that apply to me?

(a) For each affected source subject to an emission limit in Table 1 to this subpart, you must demonstrate continuous compliance according to the requirements in Table 4 to this subpart.

(b) For each wet scrubber subject to the operating limits for pressure drop and scrubber water flow rate in § 63.9890(b), you must demonstrate continuous compliance according to the requirements in paragraphs (b)(1) and (2) of this section.

(1) Collecting and reducing the monitoring data according to § 63.9921(b); and

(2) Maintaining the hourly average pressure drop and scrubber water flow rate at or above the minimum level established during the initial or subsequent performance.

(c) You must demonstrate continuous compliance with the work practice standards in § 63.9891 by operating according to the requirements in your fugitive dust emissions control plan and recording information needed to document conformance with the requirements.

§ 63.9924 How do I demonstrate continuous compliance with the operation and maintenance requirements that apply to me?

For each emission point subject to an emission limit in Table 1 to this subpart, you must demonstrate continuous compliance with the operation and maintenance requirements in § 63.9900 by performing preventive maintenance for each control device according to § 63.9900(b) and recording all information needed to document conformance with these requirements.

§ 63.9925 What other requirements must I meet to demonstrate continuous compliance?

(a) *Deviations.* You must report each instance in which you did not meet each emission limitation in § 63.9890 or work practice standard in § 63.9891 that applies to you. This includes periods of startup, shutdown, and malfunction. You must also report each instance in which you did not meet each operation and maintenance requirement required in § 63.9900 that applies to you. These instances are deviations from the emission limitations, work practice standards, and operation and maintenance requirements in this subpart. These deviations must be reported according to the requirements in § 63.9931.

(b) *Startups, shutdowns, and malfunctions.* During periods of startup, shutdown, and malfunction, you must operate in accordance with your startup, shutdown, and malfunction plan.

(1) Consistent with §§ 63.6(e) and 63.7(e)(1), deviations that occur during a period of startup, shutdown, or malfunction are not violations if you demonstrate to the Administrator's satisfaction that you were operating in accordance with the startup, shutdown, and malfunction plan.

(2) The Administrator will determine whether deviations that occur during a period of startup, shutdown, or malfunction are violations, according to the provisions in § 63.6(e).

Notifications, Reports, and Records

§ 63.9930 What notifications must I submit and when?

(a) You must submit all of the notifications in §§ 63.7(b) and (c), 63.8(f)(4), 63.9(b), and 63.9(h) that apply to you by the specified dates.

(b) As specified in § 63.9(b)(2), if you startup your affected source before October 10, 2003, you must submit your initial notification no later than February 9, 2004.

(c) As specified in § 63.9(b)(3), if you start your new affected source on or after October 10, 2003, you must submit your initial notification no later that 120 calendar days after you become subject to this subpart.

(d) If you are required to conduct a performance test, you must submit a notification of intent to conduct a performance test at least 60 calendar days before the performance test is scheduled to begin as required in § 63.7(b)(1).

(e) If you are required to conduct a performance test or other initial compliance demonstration, you must submit a notification of compliance status according to § 63.9(h)(2)(ii), and the requirements in paragraphs (e)(1) and (2) of this section:

(1) For each initial compliance demonstration that does not include a performance test, you must submit the notification of compliance status before the close of business on the 30th calendar day following completion of the initial compliance demonstration.

(2) For each initial compliance demonstration that does include a performance test, you must submit the notification of compliance status, including the performance test results, before the close of business on the 60th calendar day following the completion of the performance test according to § 63.10(d)(2).

§ 63.9931 What reports must I submit and when?

(a) *Compliance report due dates.* Unless the Administrator has approved a different schedule, you must submit a semiannual compliance report to your permitting authority according to the requirements in paragraphs (a)(1) through (5) of this section.

(1) The first compliance report must cover the period beginning on the compliance date that is specified for your affected source in § 63.9883 and ending on June 30 or December 31, whichever date comes after the compliance date that is specified for your source in § 63.9883.

(2) The first compliance report must be postmarked or delivered no later than July 31 or January 31, whichever date comes first after your compliance report is due.

(3) Each subsequent compliance report must cover the semiannual reporting period from January 1 through June 30 or the semiannual reporting period from July 1 through December 31.

(4) Each subsequent compliance report must be postmarked or delivered no later than July 31 or January 31, whichever date comes first after the end of the semiannual reporting period.

(5) For each affected source that is subject to permitting regulations

pursuant to 40 CFR part 70 or 40 CFR part 71, and if the permitting authority has established dates for submitting semiannual reports pursuant to 40 CFR 70.6(a)(3)(iii)(A) or 40 CFR 71.6(a)(3)(iii)(A), you may submit the first and subsequent compliance reports according to the dates the permitting authority has established instead of according to the dates in paragraphs (a)(1) through (4) of this section.

(b) *Compliance report contents.* Each compliance report must include the information in paragraphs (b)(1) through (3) of this section and, as applicable, paragraphs (b)(4) through (8) of this section.

(1) Company name and address.

(2) Statement by a responsible official, with that official's name, title, and signature, certifying the truth, accuracy, and completeness of the content of the report.

(3) Date of report and beginning and ending dates of the reporting period.

(4) If you had a startup, shutdown, or malfunction during the reporting period and you took actions consistent with your startup, shutdown, and malfunction plan, the compliance report must include the information in § 63.10(d)(5)(i).

(5) If there were no deviations from the continuous compliance requirements in §§ 63.9923 and 63.9924 that apply to you, a statement that there were no deviations from the emission limitations, work practice standards, or operation and maintenance requirements during the reporting period.

(6) If there were no periods during which a CPMS was out-of-control as specified in § 63.8(c)(7), a statement that there were no periods during which the CPMS was out-of-control during the reporting period.

(7) For each deviation from an emission limitation in § 63.9890 that occurs at an affected source where you are not using a CPMS to comply with an emission limitation in this subpart, the compliance report must contain the information in paragraphs (b)(1) through (4) of this section and the information in paragraphs (b)(7)(i) and (ii) of this section. This includes periods of startup, shutdown, and malfunction.

(i) The total operating time of each affected source during the reporting period.

(ii) Information on the number, duration, and cause of deviations (including unknown cause, if applicable) as applicable and the corrective action taken.

(8) For each deviation from an emission limitation occurring at an affected source where you are using a CPMS to comply with the emission limitation in this subpart, you must include the information in paragraphs (b)(1) through (4) of this section and the information in paragraphs (b)(8)(i) through (xi) of this section. This includes periods of startup, shutdown, and malfunction.

(i) The date and time that each malfunction started and stopped.

(ii) The date and time that each continuous monitoring was inoperative, except for zero (low-level) and high-level checks.

(iii) The date, time, and duration that each continuous monitoring system was out-of-control, including the information in § 63.8(c)(8).

(iv) The date and time that each deviation started and stopped, and whether each deviation occurred during a period of startup, shutdown, or malfunction or during another period.

(v) A summary of the total duration of the deviation during the reporting period and the total duration as a percent of the total source operating time during that reporting period.

(vi) A breakdown of the total duration of the deviations during the reporting period including those that are due to startup, shutdown, control equipment problems, process problems, other known causes, and other unknown causes.

(vii) A summary of the total duration of continuous monitoring system downtime during the reporting period and the total duration of continuous monitoring system downtime as a percent of the total source operating time during the reporting period.

(viii) A brief description of the process units.

(ix) A brief description of the continuous monitoring system.

(x) The date of the latest continuous monitoring system certification or audit.

(xi) A description of any changes in continuous monitoring systems, processes, or controls since the last reporting period.

(c) *Immediate startup, shutdown, and malfunction report.* If you had a startup, shutdown, or malfunction during the semiannual reporting period that was not consistent with your startup, shutdown, and malfunction plan, you must submit an immediate startup, shutdown, and malfunction report according to the requirements in § 63.10(d)(5)(ii).

(d) *Part 70 monitoring report.* If you have obtained a title V operating permit for an affected source pursuant to 40 CFR part 70 or 40 CFR part 71, you must report all deviations as defined in this subpart in the semiannual monitoring report required by 40 CFR 70.6(a)(3)(iii)(A) or 40 CFR 71.6(a)(3)(iii)(A). If you submit a compliance report for an affected source along with, or as part of, the semiannual monitoring report required by 40 CFR 70.6(a)(3)(iii)(A) or 40 CFR 71.6(a)(3)(iii)(A), and the compliance report includes all the required information concerning deviations from any emissions limitation, work practice standards, or operation and maintenance requirement in this subpart, submission of the compliance report satisfies any obligation to report the same deviations in the semiannual monitoring report. However, submission of the compliance report does not otherwise affect any obligation you may have to report deviations from permit requirements for an affected source to your permitting authority.

§ 63.9932 What records must I keep?

(a) You must keep the records as indicated in paragraphs (a)(1) through (3) of this section:

(1) A copy of each notification and report that you submitted to comply with this subpart, including all documentation supporting any initial notification or notification of compliance status that you submitted, according to the requirements in § 63.10(b)(2)(xiv).

(2) The records in § 63.6(e)(3)(iii) through (v) related to startup, shutdown, and malfunction.

(3) Records of performance tests and performance evaluations as required in § 63.10(b)(2)(viii).

(b) You must keep the records required in §§ 63.9932 and 63.9933 to show continuous compliance with each emission limitation, work practice standard, and operating and maintenance requirement that applies to you.

§ 63.9933 In what form and how long must I keep my records?

(a) Your records must be in a form suitable and readily available for expeditious review, according to § 63.10(b)(1).

(b) As specified in § 63.10(b)(1), you must keep each record for 5 years following the date of each occurrence, measurement, maintenance, corrective action, report, or record.

(c) You must keep each record on site for at least 2 years after the date of each occurrence, measurement, maintenance, corrective action, report, or record according to § 63.10(b)(1). You can keep the records off site for the remaining 3 years.

(d) You must keep your fugitive dust emissions control plan and your operation and maintenance plan on-site

according to the requirements in §§ 63.9891(d) and 63.9900(c).

Other Requirements and Information

§ 63.9940 What parts of the General Provisions apply to me?

Table 4 to this subpart shows which parts of the General Provisions in §§ 63.1 through 63.15 apply to you.

§ 63.9941 Who implements and enforces this subpart?

(a) This subpart can be implemented and enforced by us, the United States Environmental Protection Agency (U.S. EPA) or a delegated authority such as your State, local, or tribal agency. If the EPA Administrator has delegated authority to your State, local, or tribal agency, then that agency has the authority to implement and enforce this subpart. You should contact your EPA Regional Office to find out if this subpart is delegated to your State, local, or tribal agency.

(b) In delegating implementation and enforcement authority of this subpart to a State, local, or tribal agency under subpart E of this part, the authorities contained in paragraph (c) of this section are retained by the Administrator of the EPA and are not transferred to the State, local, or tribal agency.

(c) The authorities that will not be delegated to State, local, or tribal agencies are specified in paragraphs (c)(1) through (4) of this section.

(1) Approval of alternatives to the non-opacity emission limitations in § 63.9890 and work practice standards in § 63.9891 under § 63.6(g).

(2) Approval of major alternatives to test methods under § 63.7(e)(2)(ii) and (f) and as defined in § 63.90.

(3) Approval of major alternatives to monitoring under § 63.8(f) and as defined in § 63.90.

(4) Approval of major alternatives to recordkeeping and reporting under § 63.10(f) and as defined in § 63.90.

§ 63.9942 What definitions apply to this subpart?

Terms used in this subpart are defined in the Clean Air Act, in § 63.2, and in this section as follows:

Chlorine plant bypass scrubber means the wet scrubber that captures chlorine gas during a chlorine plant shut down or failure.

Deviation means any instance in which an affected source subject to this subpart, or an owner or operator of such a source:

(1) Fails to meet any requirement or obligation established by this subpart, including but not limited to any emission limitation (including operating limits) or operation and maintenance requirement;

(2) Fails to meet any term or condition that is adopted to implement an applicable requirement in this subpart and that is included in the operating permit for any affected source required to obtain such a permit; or

(3) Fails to meet any emission limitation in this subpart during startup, shutdown, or malfunction, regardless of whether or not such failure is permitted by this subpart.

Emission limitation means any emission limit, opacity limit, or operating limit.

Launder off-gas system means a system that collects chlorine and hydrochloric acid fumes from collection points within the melt/reactor system building. The system then removes particulate matter and hydrochloric acid from the collected gases prior to discharge to the atmosphere.

Magnesium chloride storage bins means vessels that store dried magnesium chloride powder produced from the spray drying operation.

Melt/reactor system means a system that melts and chlorinates dehydrated brine to produce high purity molten magnesium chloride feed for electrolysis.

Primary magnesium refining means the production of magnesium metal and magnesium metal alloys from natural sources of magnesium chloride such as sea water or water from the Great Salt Lake and magnesium bearing ores.

Responsible official means responsible official as defined in § 63.2.

Spray dryer means dryers that evaporate brine to form magnesium powder by contact with high temperature gases exhausted from gas turbines.

Wet scrubber means a device that contacts an exhaust gas with a liquid to remove particulate matter and acid gases from the exhaust. Examples are packed-bed wet scrubbers and venturi scrubbers.

Work practice standard means any design, equipment, work practice, or operational standard, or combination thereof, that is promulgated pursuant to section 112(h) of the Clean Air Act.

Tables to Subpart TTTTT of Part 63

As required in § 63.9890(a), you must comply with each applicable emission limit in the following table:

TABLE 1 TO SUBPART TTTTT OF PART 63—EMISSION LIMITS

For . . .	You must comply with each of the following . . .
1. Each spray dryer stack	a. You must not cause to be discharged to the atmosphere any gases that contain particulate matter in excess of 100 lbs/hr; and b. You must not cause to be discharged to the atmosphere any gases that contain hydrochloric acid in excess of 200 lbs/hr.
2. Each magnesium chloride storage bins scrubber stack.	a. You must not cause to be discharged to the atmosphere any gases that contain hydrochloric acid in excess of 47.5 lbs/hr and 0.35 gr/dscf; and b. You must not cause to be discharged to the atmosphere any gases that contain PM_{10} in excess of 2.7 lbs/hr and 0.016 gr/dscf.
3. Each melt/reactor system stack	a. You must not cause to be discharged to the atmosphere any gases that contain PM_{10} in excess of 13.1 lbs/hr; and b. You must not cause to be discharged to the atmosphere any gases that contain hydrochloric acid in excess of 7.2 lbs/hr; and c. You must not cause to be discharged to the atmosphere any gases that contain chlorine in excess of 100 lbs/hr; and d. You must not cause to be discharged to the atmosphere any gases that contain 36 ng TEQ/dscm corrected to 7% oxygen.
4. Each launder off-gas system stack	a. You must not cause to be discharged to the atmosphere any gases that contain particulate matter in excess of 37.5 lbs/hr; and b. You must not cause to be discharged to the atmosphere any gases that contain hydrochloric acid in excess of 46.0 lbs/hr; and

TABLE 1 TO SUBPART TTTTT OF PART 63—EMISSION LIMITS—Continued

For . . .	You must comply with each of the following . . .
	c. You must not cause to be discharged to the atmosphere any gases that contain chlorine in excess of 26.0 lbs/hr.

TABLE 2 TO SUBPART TTTTT OF PART 63—TOXIC EQUIVALENCY FACTORS

Dioxin/furan congener	Toxic equivalency factor
2,3,7,8-tetrachlorinated dibenzo-p-dioxin	1
1,2,3,7,8-pentachlorinated dibenzo-p-dioxin	1
1,2,3,4,7,8-hexachlorinated dibenzo-p-dioxin	0.1
1,2,3,7,8,9-hexachlorinated dibenzo-p-dioxin	0.1
1,2,3,6,7,8-hexachlorinated dibenzo-p-dioxin	0.1
1,2,3,4,6,7,8-heptachlorinated dibenzo-p-dioxin	0.01
octachlorinated dibenzo-p-dioxin	0.0001
2,3,7,8-tetrachlorinated dibenzofuran	0.1
2,3,4,7,8-pentachlorinated dibenzofuran	0.5
1,2,3,7,8-pentachlorinated dibenzofuran	0.05
1,2,3,4,7,8-hexachlorinated dibenzofuran	0.1
1,2,3,6,7,8-hexachlorinated dibenzofuran	0.1
1,2,3,7,8,9-hexachlorinated dibenzofuran	0.1
2,3,4,6,7,8-hexachlorinated dibenzofuran	0.1
1,2,3,4,6,7,8-heptachlorinated dibenzofuran	0.01
1,2,3,4,7,8,9-heptachlorinated dibenzofuran	0.01
octachlorinated dibenzofuran	0.0001

As required in 63.9916, you must demonstrate initial compliance with the emission limits according to the following table:

TABLE 3 TO SUBPART TTTTT OF PART 63—INITIAL COMPLIANCE WITH EMISSION LIMITS

For . . .	You have demonstrated initial compliance if . . .
1. Each spray dryer stack	a. The average mass flow of particulate matter from the control system applied to emissions from each spray dryer, measured according to the performance test procedures in § 63.9913(c), did not exceed 100 lbs/hr; and b. The average mass flow of hydrochloric acid from the control system applied to emissions from each spray dryer, determined according to the performance test procedures in § 63.9914(c), did not exceed 200 lbs/hr.
2. Each magnesium chloride storage bin scrubber stack.	a. The average mass flow of hydrochloric acid from the control system applied to the magnesium chloride storage bins scrubber exhaust, measured according to the performance test procedure in § 63.9914, did not exceed 47.5 lbs/hr and 0.35 gr/dscf; and b. The average mass flow of PM_{10} from the control system applied to the magnesium chloride storage bins scrubber exhaust, determined according to the performance test procedures in § 63.9913, did not exceed 2.7 lbs/hr and 0.016 gr/dscf.
3. Each melt/reactor system stack	a. The average mass flow of PM_{10} from the control system applied to the melt/reactor system exhaust, measured according to the performance test procedures in § 63.9913, did not exceed 13.1 lbs/hr; and b. The average mass flow of hydrochloric acid from the control system applied to the melt/reactor system exhaust, measured according to the performance test procedures in § 63.9914, did not exceed 7.2 lbs/hr; and c. The average mass flow of chlorine from the control system applied to the melt/reactor system exhaust, measured according to the performance test procedures in § 63.9914, did not exceed 100 lbs/hr. d. The average concentration of dioxins/furans from the control system applied to the melt/reactor system exhaust, measured according to the performance test procedures in § 63.9915, did not exceed 36 ng TEQ/dscm corrected to 7% oxygen.
4. Each launder off-gas system stack	a. The average mass flow of particulate matter from the control system applied to the launder off-gas system collection system exhaust, measured according to the performance test procedures in § 63.9913, did not exceed 37.5 lbs/hr; and b. The average mass flow of hydrochloric acid from the control system applied to the launder off-gas system collection system exhaust, measured according to the performance test procedures in § 63.9914, did not exceed 46.0 lbs/hr; and c. The average mass flow of chlorine from the control system applied to the launder off-gas system collection system exhaust, measured according to the performance test procedures in § 63.9914, did not exceed 26.0 lbs/hr.

As required in § 63.9923, you must demonstrate continuous compliance with the emission limits according to the following table:

TABLE 4 TO SUBPART TTTTT OF PART 63—CONTINUOUS COMPLIANCE WITH EMISSION LIMITS

For . . .	You must demonstrate continuous compliance by . . .
1. Each spray dryer stack	a. Maintaining emissions of PM_{10} at or below 100 lbs/hr; and b. Maintaining emissions of hydrochloric acid at or below 200 lbs/hr; and c. Conducting subsequent performance tests at least twice during each term of your title V operating permit (at mid-term and renewal).
2. Magnesium chloride storage bins scrubber stack.	a. Maintaining emissions of hydrochloric acid at or below 47.5 lbs/hr and 0.35 gr/dscf; and b. Maintaining emissions of PM_{10} at or below 2.7 lbs/hr and 0.016 gr/dscf; and c. Conducting subsequent performance tests at least twice during each term of your title V operating permit (at mid-term and renewal).
3. Each melt/reactor system stack	a. Maintaining emissions of PM_{10} at or below 13.1 lbs/hr; and b. Maintaining emissions of hydrochloric acid at or below 7.2 lbs/hr; and c. Maintaining emissions of chlorine at or below 100 lbs/hr; and d. Maintaining emissions of dioxins/furans at or below 36 ng TEQ/dscm corrected to 7% oxygen. e. Conducting subsequent performance test at least twice during each term of your title V operating permit (at mid-term and renewal).
4. Each launder off-gas system stack	a. Maintaining emissions of particulate matter at or below 37.5 lbs/hr; and b. Maintaining emissions of hydrochloric acid at or below 46.0 lbs/hr; and c. Maintaining emissions of chlorine at or below 26.0 lbs/hr; and d. Conducting subsequent performance tests at least twice during each term of your title V operating permit (at mid-term and renewal).

As required in § 63.9950, you must comply with the requirements of the NESHAP General Provisions (40 CFR part 63, subpart A) shown in the following table:

TABLE 5 TO SUBPART TTTTT OF PART 63—APPLICABILITY OF GENERAL PROVISIONS TO SUBPART TTTTT OF PART 63

Citation	Subject	Applies to Subpart TTTTT	Explanation
63.1	Applicability	Yes.	
63.2	Definitions	Yes.	
63.3	Units and Abbreviations	Yes.	
63.4	Prohibited Activities	Yes.	
63.5	Construction and Reconstruction	Yes.	
63.6(a)–(g)	Compliance with Standards and Maintenance Requirements.	Yes.	
63.6(h)	Determining Compliance with Opacity and Visible Emission Standards.	No.	
63.6(i)–(j)	Extension of Compliance and Presidential Compliance Exemption.	Yes.	
63.7(a)(1)–(2)	Applicability and Performance Test Dates.	No	Subpart TTTTT specifies performance test applicability and dates.
63.7(a)(3), (b)–(h)	Performance Testing Requirements	Yes.	
63.8 except for (a)(4),(c)(4), and (f)(6)	Monitoring Requirements	Yes.	
63.8(a)(4)	Additional Monitoring Requirements for Control Devices in § 63.11.	No	Subpart TTTTT does not require flares.
63.8(c)(4)	Continuous Monitoring System Requirements.	No	Subpart TTTTT specifies requirements for operation of CMS.
63.8(f)(6)	Relative Accuracy Test Alternative (RATA).	No	Subpart TTTTT does not require continuous emission monitoring systems.
63.9	Notification Requirements	Yes.	
63.9(g)(5)	Data Reduction	No	Subpart TTTTT specifies data reduction requirements.
63.10 except for (b)(2)(xiii) and (c)(7)–(8)	Recordkeeping and Reporting Requirements.	Yes.	
63.10(b)(2)(xiii)	Continuous Monitoring System (CMS) Records for RATA Alternative.	No	Subpart TTTTT does not require continuous emission monitoring systems.
63.10(c)(7)–(8)	Records of Excess Emissions and Parameter Monitoring Accedences for CMS.	No	Subpart TTTTT specifies recordkeeping requirements.
63.11	Control Device Requirements	No	Subpart TTTTT does not require flares.
63.12	State Authority and Delegations	Yes.	

TABLE 5 TO SUBPART TTTTT OF PART 63—APPLICABILITY OF GENERAL PROVISIONS TO SUBPART TTTTT OF PART 63—Continued

Citation	Subject	Applies to Subpart TTTTT	Explanation
63.13–63.15	Addresses, Incorporation by Reference, Availability of Information.	Yes.	

[FR Doc. 03–22447 Filed 10–9–03; 8:45 am]
BILLING CODE 6560–50–P

FEDERAL COMMUNICATIONS COMMISSION

47 CFR Parts 1 and 25

[IB Docket No. 02–30; FCC 03–197]

Licensing Domestic Satellite Earth Stations in the Bush Communities of Alaska

AGENCY: Federal Communications Commission.

ACTION: Final rule.

SUMMARY: The Federal Communications Commission (FCC) has adopted a Report and Order that discontinue the Alaska Bush Earth Station Policy (Alaska Bush Policy), which precludes installing or operating more than one satellite earth station in any Alaskan Bush community for competitive carriage of interstate Message Telephone Service (MTS) communications, *i.e.*, ordinary interstate, interexchange toll telephone calls. Alaska Bush communities, as defined for purposes of the policy, are rural Alaskan communities of less than 1,000 residents that are isolated from larger cities by rugged terrain and harsh weather conditions.

DATES: Effective November 10, 2003.

FOR FURTHER INFORMATION CONTACT: JoAnn Lucanik at (202) 418–0873. Internet: *JoAnn.Lucanki@fcc.gov,* International Bureau, Federal Communications Commission, 445 12th Street, SW., Washington, DC 20554.

SUPPLEMENTARY INFORMATION: This is a summary of the Commission's Report in IB Docket No. 02–30, RM No. 7246, FCC 03–197, adopted August 6, 2003. The complete text of this decision is available for inspection and copying during normal business hours in the FCC Reference Information Center Portals II, 445 12th Street, SW., Room CY–A257, Washington, DC 20554, and also may be purchased from the Commission's copy contractor, Qualex International Portals II, 445 12th Street, SW., Room CY–B402, Washington, DC 20554, telephone (202) 863–2893, facsimile (202) 863–2898, or via e-mail, *qualexint@aol.com.*

Summary of the Report and Order

The Federal Communications Commission has adopted a Report and Order that will discontinue the Alaska Bush Policy. This action eliminates a long-standing exception to the Commission's general policy favoring open entry for facilities-based competition in the provision of interstate MTS telecommunications services. We believe that allowing facilities-based competition of interstate MTS in Alaska Bush communities will encourage improvement in the quality of service available in those communities, promote more efficient delivery of service, and reduce incentives for overcharging for use of these facilities.

A complete history of the Alaska Bush Policy may be found in the Notice of Proposed Rulemaking in this proceeding and will not be repeated here. *See Policy for Licensing Domestic Satellite Earth Stations in the Bush Communities of Alaska,* Notice of Proposed Rulemaking, 67 FR 37750 (May 30, 2002). Briefly, the policy of licensing only one satellite earth station in each Alaska Bush community to provide conventional interexchange MTS was formulated in the Commission's *Tentative Decision* in 1982. Pursuant to the Alaska Bush Policy, Alascom, Inc. (Alascom), now a wholly owned subsidiary of AT&T Corp., alone or in partnership with United Utilities, Inc. (United), a local exchange carrier, was authorized to construct and operate the earth station facilities in the Alaska Bush communities and to provide MTS service. The Alaska Bush Policy was based on the principle that duplicative proposals for facilities in the Alaska Bush communities are mutually exclusive because one facility could provide all the services provided by either party, and there was no public interest benefit in the construction of duplicate MTS facilities.

When the Commission formally adopted the Alaska Bush Policy in 1984, no MTS competition, in any form, had been authorized in Alaska. *See Policies Governing the Ownership and Operation of Domestic Satellite Earth Stations in the Bush Communities in Alaska,* 49 FR 9727 (March 15, 1984), Final Decision. In 1990, however, the Alaska legislature opened most of the State's telecommunications markets to facilities-based competition, but not the Alaska Bush communities. *See* Act of June 7, 1990, 1990 Alaska Sess. Laws Ch. 93; *see also Regulations Governing the Market Structure for Interstate Interexchange Telecommunications Services,* 10 APUC 407 (1990). Five years later the Regulatory Commission of Alaska (RCA) granted General Communication, Inc. (GCI), an Alaskan facilities-based interstate long distance carrier, a temporary waiver, allowing it to install earth stations in 50 Alaska Bush communities and to provide intrastate MTS in competition with Alascom on an experimental basis. The following year the FCC's International Bureau (Bureau) granted GCI's request to waive the Alaska Bush Policy in the same 50 Alaska Bush communities, thus allowing GCI to use its earth stations to provide both interstate and intrastate MTS in these 50 communities. *See Petition of General Communication, Inc. for a Partial Waiver of the Bush Earth Station Policy,* Memorandum Opinion and Order, 11 FCC Rcd 2535 (Int'l Bur. 1996) (GCI Waiver). The Bureau concluded that the potential public interest benefits of providing the 50 Alaska Bush communities with increased service options, improved quality, and lower rates outweighed a rigid adherence to a policy that does not provide for technological advancements and market changes.

In 2000, the RCA found that allowing GCI to construct duplicate earth stations in the 50 Alaska Bush communities had, in fact, led to a more efficient use of available satellite resources, resulting in consumers benefiting from lower retail rates and improved service quality. In view of its finding, the RCA eliminated Alaska's restrictions on facilities-based MTS competition in the Alaskan Bush. *See Consideration of the Reform of Intrastate Interexchange Telecommunications Market Structure and Regulations in Alaska,* Docket R–98–1, Order No. 6 (RCA, Nov. 20, 2000) (not published in the **Federal Register**).

Thus, the FCC's Bush Policy remains the only significant regulatory barrier to facilities-based MTS competition throughout Alaska.

On February 15, 2002, the Commission released the *NPRM* in this proceeding, proposing to discontinue the Alaska Bush Policy. The Commission noted in the *NPRM* that the Alaska Bush Policy is based on the proposition that applications for ''duplicative'' Alaska Bush earth stations are mutually exclusive. It also noted that the Alaska Bush Policy was formulated prior to the advent of MTS competition, and is based on a regulatory policy designed to prevent non-dominant carriers from investing in facilities at their own expense to compete with a carrier with an established facilities monopoly. Finally, the Commission pointed to the fact that the RCA has removed the parallel intrastate entry barrier. Consequently, the Commission tentatively concluded that the time has arrived to remove the barrier against facilities-based interstate MTS in the Alaska Bush as well. The Commission also tentatively concluded that facilities-based competition in the provision of interstate MTS in Alaska Bush communities will result in public interest benefits comparable to those that were realized in the 50 Alaska Bush communities in which GCI has been allowed to provide competitive MTS service. Accordingly, the Commission invited comment on its proposal to abolish the Alaska Bush Policy.

Three parties, Alascom and AT&T, GCI, and the RCA, have filed comments in response to the *NPRM.* All three commenters support the Commission's proposal to eliminate its prohibition on the installation or operation of more than one satellite earth station in any Alaska Bush community for the competitive carriage of interstate MTS.

The RCA submits that since 1995, when both the RCA and the FCC waived applicable Alaska Bush facility restrictions to allow GCI to construct duplicate earth stations in Bush communities, consumers have benefited from lower retail rates and improved service quality. According to the RCA, these benefits are what ultimately motivated it to eliminate the State's restrictions on facilities-based intrastate MTS competition in Bush Alaska in 2000. Moreover, the RCA says that facilities-based MTS competition in Alaska Bush communities will also establish an incentive for Alascom to operate more efficiently.

GCI provides specific examples of how competition between it and Alascom has benefited the Alaska Bush communities with improved telecommunication efficiency and new service offerings. According to GCI, the first and perhaps most significant technological improvement was the implementation of its Demand Assigned Multiple Access (DAMA) satellite transmission system, which allows bandwidth to be used more efficiently. Before DAMA, all channels were assigned exclusively to a certain community and could not be used for other communities; DAMA also eliminated the need for a ''double hop'' configuration, where two satellite hops were needed to complete a call, resulting in signal delay and frequency echo, and rendering facsimile transmission unreliable and data transmission impossible. GCI states that the success it has achieved with DAMA has caused Alascom to upgrade many of its Alaska Bush earth station facilities to digital DAMA technology. GCI also states that greater facilities efficiency has enabled it to offer telemedicine in Alaska Bush communities, as well as reliable Internet connection for schools and libraries in nearly all of the Alaska Bush communities it serves. In addition, GCI says all customers in Alaska have benefited significantly from decreased long-distance rates since it entered the market.

Alascom and AT&T also support repeal of the Alaska Bush Policy, but contend that other deregulatory actions, which they requested in a March 10, 2000 Petition, ''are indivisible aspects of the [Alaska] Bush Policy'' and thus, must be acted upon simultaneously. *See* Public Notice, *Pleading Cycle Established for Comments on AT&T and Alascom Petition for Structural and Other Regulatory Relief* in DA 00–603, released March 17, 2000 [not published in the **Federal Register**]. In this Petition, Alascom and AT&T requested, among other relief, that the Commission eliminate structural separation and tariffing requirements under which Alascom has been providing certain carrier-to-carrier services in Alaska. On January 7, 2003, Alascom filed a petition for waiver from the requirement that it annually file revised cost-based rates for these carrier-to-carrier services. See also Public Notice, *Pleading Cycle Established for Comments on AT&T and Alascom Petition for Structural and Other Regulatory Relief* in DA 00–603, released March 17, 2000 (not published in the **Federal Register**). Alascom and AT&T point out in these petitions that Alascom now must disaggregate all of its service costs within Alaska by location, resulting in more than 900 separate cost points. Alascom and AT&T contend that no other carrier has ever been forced to provide a service based upon stand-alone location-specific costs. The present tariff requirements, they submit, impose unwarranted competitive regulatory burdens that are preventing Alascom from providing its customers with improved service. These petitions are under consideration in separate dockets.

The need for the Alaska Bush Policy is over. As was noted in the *NPRM,* the ''Alaska Bush Policy is an isolated exception to the Commission's interstate MTS open-entry policy.'' *NPRM,* 67 FR 37750 (May 30, 2002). It was based on the assumption that authorizing more than one earth station in an Alaska Bush community would be duplicative and thus needlessly expensive, since a single earth station is sufficient to accommodate all the calls placed to or from the community. The GCI experience has demonstrated that the concern underlying the Alaska Bush Policy is no longer warranted. GCI has provided us with what we believe to be a preview of the public interest benefits that will be realized by allowing open-entry, facilities-based competition in the provision of interstate MTS in Alaska Bush communities. We believe that by eliminating the Alaska Bush Policy, citizens of the Alaska Bush communities will benefit from improved telecommunications services provided by both Alascom and its competitors at lower prices. For these reasons, we eliminate the Alaska Bush Policy.

Finally, we note that this proceeding was established for the limited purpose of considering the elimination of the Alaska Bush Policy. Consequently, we decline to address at this time other potential changes to our regulatory requirements for Alaska. In particular, because, as indicated previously, eliminating the Alaska Bush Policy would promote important public interests, we decline to defer this deregulatory step pending our consideration of Alascom's and AT&T's March 2000 and January 2003 petitions.

For the reasons set forth on the record in this proceeding, we abolish the Alaska Bush Policy, thus eliminating the restriction on facilities-based competition in the Alaska Bush.

Final Regulatory Flexibility Certification

The Regulatory Flexibility Act of 1980, as amended (RFA), *See* 5 U.S.C. 603. The RFA, *see* 5 U.S.C. 601 *et seq.,* has been amended by the Contract With America Advancement Act of 1996, Public Law 104–121, 110 Stat. 847 (1996) (CWAA). Title II of the CWAAA is the Small Business Regulatory

Enforcement Fairness Act of 1996, (SBREFA) requires that a regulatory flexibility analysis be prepared for rulemaking proceedings, unless the agency certifies that ''the rule will not have a significant economic impact on a substantial number of small entities.'' 5 U.S.C. 605(b). The RFA generally defines ''small entity'' as having the same meaning as the terms ''small business,'' ''small organization,'' and ''small governmental jurisdiction.'' 5 U.S.C. 605(6). In addition, the term ''small business'' has the same meaning as ''small business concern'' under the Small Business Act. [*See* 5 U.S.C. 605(3) (incorporating by reference the definition of ''small business concern'' in the Small Business Act, 15 U.S.C. 632). Pursuant to 5 U.S.C. 601(3), the statutory definition of a small business applies ''unless an agency, after consultation with the Office of Advocacy of the Small Business Administration and after the opportunity for public comment, establishes one or more definitions of such term that are appropriate to the activities of the agency and publishes such definition(s) in the **Federal Register**.] A small business concern is one that: (1) Is independently owned and operated; (2) is not dominant in its field or operation; and (3) satisfies any additional criteria established by the Small Business Administration (SBA). Small Business Act, 15 U.S.C. 632 (1996).

The Report and Order repeals a regulatory policy that prevented companies from obtaining licenses to operate earth stations in rural Alaska that would carry telephone calls between users in certain Alaskan communities and users in other states if such service was already available in those communities via facilities provided by an established carrier. Because the Report and Order does not impose any regulatory burden, we certify that it will not have a significant economic impact on a substantial number of small businesses. The Commission will send a copy of the Report and Order, including a copy of this final certification, in a report to Congress pursuant to the Small Business Regulatory Enforcement Fairness Act of 1996. *See* 5 U.S.C. 801(a)(1)(A). In addition, the Report and Order and this final certification will be sent to the Chief Counsel for Advocacy of the SBA and will be published in the **Federal Register**.

The Alaska Bush Earth Station Policy, formally adopted by the Commission in *Policies Governing the Ownership and Operation of Domestic Satellite Earth Stations in the Bush Communities in Alaska,* Final Decision, 49 FR 9727 (March 15, 1984) *is discontinued.*

The Commission's Consumer and Government Bureau, Reference Information Center, *shall send* a copy of this *Report and Order,* including the Final Regulatory Flexibility Certification, to the Chief Counsel for Advocacy of the Small Business Administration.

List of Subjects in 47 CFR Parts 1 and 25

Satellites.

Federal Communications Commission.

Marlene H. Dortch,

Secretary.

[FR Doc. 03–25654 Filed 10–9–03; 8:45 am]

BILLING CODE 6712–01–P

DEPARTMENT OF DEFENSE

48 CFR Parts 202, 204, 211, 212, 243, and 252

[DFARS Case 2003–D081]

Defense Federal Acquisition Regulation Supplement; Unique Item Identification and Valuation

AGENCY: Department of Defense (DoD).

ACTION: Interim rule with request for comments.

SUMMARY: DoD has issued an interim rule amending the Defense Federal Acquisition Regulation Supplement (DFARS) to add policy pertaining to item identification and valuation. The rule requires contractors to uniquely identify, through the use of item identification marking, all items to be delivered to the Government. The rule also adds requirements for contracts to provide for identification of the Government's acquisition cost of items that are built or acquired by a contractor during contract performance and subsequently delivered to the Government.

DATES: *Effective date:* January 1, 2004.

Applicability date: The requirements in this rule apply to all solicitations issued on or after January 1, 2004.

Comment date: Comments on the interim rule should be submitted to the address shown below on or before November 10, 2003, to be considered in the formation of the final rule.

ADDRESSES: Respondents may submit comments directly on the World Wide Web at *http://emissary.acq.osd.mil/dar/dfars.nsf/pubcomm.* As an alternative, respondents may e-mail comments to: *dfars@osd.mil.* Please cite DFARS Case 2003–D081 in the subject line of e-mailed comments.

Respondents that cannot submit comments using either of the above methods may submit comments to: Defense Acquisition Regulations Council, Attn: Mr. Steven Cohen, OUSD(AT&L)DPAP(DAR), IMD 3C132, 3062 Defense Pentagon, Washington, DC 20301–3062; facsimile (703) 602–0350. Please cite DFARS Case 2003–D081.

At the end of the comment period, interested parties may view public comments on the World Wide Web at *http://emissary.acq.osd.mil/dar/dfars.nsf.*

FOR FURTHER INFORMATION CONTACT: Mr. Steven Cohen, (703) 602–0293.

SUPPLEMENTARY INFORMATION:

A. Background

This interim rule establishes requirements for contractors to furnish unique item identifiers, or other item identification, and to provide the Government's acquisition cost of items that are to be delivered under a DoD contract.

The rule requires contracting officers to include appropriate administrative requirements in contracts so that the Government's acquisition cost of the delivered items can be captured in DoD's property accountability, inventory, and financial management information systems.

The rule requires that all items delivered to the Government be delivered under a contract line item and that the Government's acquisition cost of each item be identified under a contract line item or subline item or an informational subline item.

The rule assumes that MIL–STD–130, Identification Marking of U.S. Military Property, will be revised to be compatible with this unique identification requirement no later than the implementation date of January 1, 2004.

DoD will make changes to its processes and information systems, in accordance with the requirements of this rule, necessary to comply with the financial reporting requirements imposed by the Federal Accounting Standards Advisory Board.

DoD is particularly interested in receiving comments on the following topics:

1. The use and definition of the term ''item'' or some more appropriate term throughout the rule.

2. The valuation portion of the rule, particularly as it applies to cost-type contracts and the treatment of non-recurring costs.

3. The statement that the rule does not impose any new information collection requirements.

4. The impact of the rule on small business.

This rule was not subject to Office of Management and Budget review under Executive Order 12866, dated September 30, 1993.

B. Regulatory Flexibility Act

This rule may have a significant economic impact on a substantial number of small entities within the meaning of the Regulatory Flexibility Act, 5 U.S.C. 601, *et seq.* DoD has prepared an initial regulatory flexibility analysis, which is summarized as follows:

This interim rule adds requirements for contractors to provide unique identification for all items delivered to DoD, through the use of item identification marking. In addition, the rule adds requirements for DoD contracts to provide for identification of the Government's acquisition cost of all items built or acquired by the contractor and subsequently delivered to DoD under the contract. This rule will facilitate DoD compliance with the Chief Financial Officers Act of 1990 (Pub. L. 101–576) and the financial reporting requirements imposed by the Federal Accounting Standards Advisory Board. The objective of the rule is to improve management of DoD assets. The rule does not duplicate, overlap, or conflict with any other Federal rules. There are no known significant alternatives that will enable DoD compliance with the Chief Financial Officers Act of 1990 and the Federal Accounting Standards Advisory Board reporting requirements.

C. Paperwork Reduction Act

The Paperwork Reduction Act does not apply because the rule does not impose any new information collection requirements that require the approval of the Office of Management and Budget under 44 U.S.C. 3501, *et seq.*

D. Determination To Issue an Interim Rule

A determination has been made under the authority of the Secretary of Defense that urgent and compelling reasons exist to publish an interim rule prior to affording the public an opportunity to comment. DoD considers the implementation of unique identification—also known as UID, to be a strategic imperative, necessary to efficiently move supplies to warfighters. This interim rule adds requirements for contractors to uniquely mark items and to provide for identification of the Government's acquisition cost of items that are to be delivered to DoD. It will enhance logistics, contracting, and financial business transactions supporting U.S. and coalition troops. Through the new policy, DoD can consistently capture the value of items it buys, control these items during their use and combat counterfeiting of parts. It will further enable DoD to make appropriate entries into its property accountability, inventory, and financial management information systems toward achieving compliance with the Chief Financial Officers Act. DoD issued UID policy by memorandum dated July 29, 2003, requiring implementation by January 1, 2004. Immediate publication of this rule is essential to allow effective implementation of the policy by January 1, 2004. Comments received in response to this interim rule will be considered in the formation of the final rule.

List of Subjects in 48 CFR Parts 202, 204, 211, 212, 243, and 252

Government procurement.

Michele P. Peterson,

Executive Editor, Defense Acquisition Regulations Council.

■ Therefore, 48 CFR Parts 202, 204, 211, 212, 243, and 252 are amended as follows:

■ 1. The authority citation for 48 CFR Parts 202, 204, 211, 212, 243, and 252 continues to read as follows:

Authority: 41 U.S.C. 421 and 48 CFR chapter 1.

PART 202—DEFINITIONS OF WORDS AND TERMS

■ 2. Section 202.101 is amended by adding, in alphabetical order, a definition of ''Unique item identifier'' to read as follows:

202.101 Definitions.

* * * * *

Unique item identifier means a set of data marked on items that is globally unique, unambiguous, and robust enough to ensure data information quality throughout life and to support multi-faceted business applications and users.

PART 204—ADMINISTRATIVE MATTERS

■ 3. Section 204.7104–1 is amended by revising paragraph (a)(3) to read as follows:

204.7104–1 Criteria for establishing.

* * * * *

(a) * * *

(3) Informational subline items shall be used to identify—

(i) Each accounting classification citation assigned to a single contract line item number when use of multiple citations is authorized (see 204.7103–1(a)(4)(ii)); and

(ii) The Government's acquisition cost of an item delivered under a contract when—

(A) The item requires a unique item identifier; and

(B) A separately priced contract line item or subline item is not practical.

* * * * *

■ 4. Section 204.7104–2 is amended by adding paragraphs (e)(10) and (11) to read as follows:

204.7104–2 Numbering procedures.

* * * * *

(e) * * *

(10) Subline items structured to capture the acquisition cost of spares that will require unique item identifiers (delivery schedule and fixed price are established for the lot of spares at the contract line item level).

Item No.	Supplies/service	Quantity	Unit	Unit price	Amount
0031	Spares for Torpedo MK 45 Mod 1	50	LOT	$56,860.57	$2,843,028.50
003101	Integrator Assy LD; Acq Cost: $16,742.25	50	EA	NSP	
003102	Pulse Generator Assy LD; Acq Cost: $8,357.56.	50	EA	NSP	
003103	Drive Shaft Assy LD; Acq Cost: $6,365.12	50	EA	NSP	
*	*	*	*	*	*
003116	Actual Panel Assy LD; Acq Cost: $5,730.56	50	EA	NSP	
003117	Pulse Decoder; Acq Cost: <$5,000	50	EA	NSP	

(11) Subline items structured to capture the acquisition cost of spares that will require unique item identifiers under a cost-type contract.

Item No.	Supplies/service	Quantity	Unit	Estimated cost*	Total estimated cost*
0031	Spares for Torpedo MK 45 Mod 1	50			$2,843,028.50
003101	Integrator Assy LD	50	EA		
003102	Pulse Generator Assy LD	50	EA		
003103	Drive Shaft Assy LD	50	EA		
*	*	*	*	*	*
003116	Actual Panel Assy LD	50	EA	$5,730.56	
003117	Pulse Decoder	50	EA	$357.00	

* Acquisition cost for each item shall be reported in accordance with 252.211–7003, Item Identification and Valuation.

PART 211—DESCRIBING AGENCY NEEDS

■ 5. Sections 211.274 through 211.274–3 are added to read as follows:

211.274 Item identification and valuation.

211.274–1 Item identification.

(a) Contracts shall require that all items delivered to the Government—

(1) Be delivered under a contract line item; and

(2) Contain unique item identification, or a DoD recognized unique identification equivalent (if one is not already marked), if—

(i) The Government's acquisition cost of the item is $5,000 or more; or

(ii) The requiring activity determines that unique identification is necessary for the item (*e.g.*, serially managed, mission essential, or controlled inventory piece of equipment or a repairable item, a consumable item or material where permanent identification is required, or a component of a delivered item).

(b) The contract shall include a requirement for commonly accepted commercial marks if it is determined that unique item identification or a DoD recognized unique identification equivalent is not required, and unique item identification is not already marked.

211.274–2 Government's acquisition cost of items.

(a) Contracts shall identify the Government's acquisition cost for all items delivered. The preferred approach for identifying the Government's acquisition cost of items is separate pricing under a contract line item or subline item.

(b) When separately priced contract line items or subline items are clearly not practicable, establish separate informational subline items (see 204.7104–1(a)) for identifying the Government's acquisition cost.

(1) Informational subline items used only for identification of the Government's acquisition cost shall be clearly identified as such and shall not be used as a basis for payment.

(2) When the Government's acquisition costs for like items differ, use a separate informational subline item to identify the acquisition cost for those items.

(c) The Government's acquisition cost for items delivered under—

(1) Fixed-price contracts is the unit price identified at contract award, updated by any contract modifications.

(2) Cost-type contracts is the contractor's fully burdened actual cost for each item, plus a proportionate amount of the fee at the time the item is delivered to the Government.

(i) Items valued at $5,000 or more shall be identified in a separate contract line item or subline item.

(ii) Items valued below $5,000 may be combined under a contract line item or subline item; however, the contractor must report the Government's acquisition cost of each item.

(d) Modify the contract to establish separate contract line items or subline items prior to delivery of items that were not identified as contract deliverables at the time of contract award.

(e) The Government's acquisition cost of components delivered within end items need not be identified.

211.274–3 Contract clause.

Use the clause at 252.211–7003, Item Identification and Valuation, in solicitations and contracts that require delivery of one or more ''items'' as defined at 252.211–7003(a). Complete paragraph (b) of the clause with the contract line item number or subline item number and description of the item(s) requiring unique identification.

PART 212—ACQUISITION OF COMMERCIAL ITEMS

■ 6. Section 212.301 is amended by adding paragraph (f)(vii) to read as follows:

212.301 Solicitation provisions and contract clauses for the acquisition of commercial items.

* * * * *

(f) * * *

(vii) Use the clause at 252.211–7003, Item Identification, as prescribed at 211.274–3.

PART 243—CONTRACT MODIFICATIONS

■ 7. Section 243.171 is amended as follows:

■ a. By redesignating the introductory text and paragraphs (a), (b), and (c), as paragraphs (a) and (a)(1), (2), and (3), respectively; and

■ b. By adding a new paragraph (b) to read as follows:

243.171 Obligation or deobligation of funds.

* * * * *

(b) When changes in the value of the contract result in changes to the Government's acquisition cost of delivered items, the contracting officer shall allocate those changes to the acquisition cost of those items.

PART 252—SOLICITATION PROVISIONS AND CONTRACT CLAUSES

■ 8. Section 252.211–7003 is added to read as follows:

252.211–7003 Item Identification and Valuation.

As prescribed in 211.274–3, use the following clause:

Item Identification and Valuation (Jan 2004)

(a) *Definitions.* As used in this clause—

Automatic identification device means a device, such as a reader or interrogator, used to retrieve data encoded on machine-readable media.

Commonly accepted commercial marks means any system of marking products for identification that is in use generally throughout commercial industry or within commercial industry sectors. Some examples of commonly accepted commercial marks are: EAN.UCC Global Trade Item Number;

Automotive Industry Action Group B–4 Parts Identification and Tracking Application Standard, and B–2 Vehicle Identification Number Bar Code Label Standard; American Trucking Association Vehicle Maintenance Reporting Standards; Electronic Industries Alliance EIA 802 Product Marking Standard; and Telecommunications Manufacturers Common Language Equipment Identification Code.

Data qualifier means a specified character (or string of characters) that immediately precedes a data field that defines the general category or intended use of the data that follows.

DoD recognized unique identification equivalent means a unique identification method that is in commercial use that can be used to uniquely identify DoD items that are purchased from commercial industries that use the unique identification equivalents. Some examples are: EAN.UCC Global Individual Asset Identifier, health care capital assets labeled with the Health Industry Bar Code Standard, and the Automotive Industry Action Group B–2 Vehicle Identification Number Bar Code Label Standard.

Enterprise means the entity (*i.e.*, a manufacturer or vendor) responsible for assigning unique item identifiers to items.

Enterprise identifier means a code that is uniquely assigned to an enterprise by a registration (or controlling) authority.

Government's acquisition cost means—

(1) For fixed-price contracts, the unit price identified at contract award, updated by any contract modifications; and

(2) For cost-type contracts, the Contractor's fully burdened actual cost that has been accumulated, plus a proportionate amount of fee for each item at the time the item is delivered.

Issuing agency code means a code that designates the registration (or controlling) authority.

Item means a single article or unit formed by a grouping of component or constituent parts required to be delivered in accordance with the terms and conditions of this contract. Under this contract, an item is any article produced, stocked, stored, issued, or used; or any product, including systems, materiel, parts, subassemblies, sets, or accessories.

Machine-readable means an automatic information technology media, such as bar codes, contact memory buttons, radio frequency identification, or optical memory cards.

Original part number means a combination of numbers or letters assigned by the enterprise at asset creation to a class of items with the same form, fit, function, and interface.

Registration (or controlling) authority means an organization responsible for assigning a non-repeatable identifier to an enterprise (*i.e.*, Dun & Bradstreet's Data Universal Numbering System (DUNS) Number, Uniform Code Council (UCC)/EAN International (EAN) Company Prefix, or Defense Logistics Information System (DLIS) Commercial and Government Entity (CAGE) Number).

Serial number within the enterprise identifier or *unique serial number* means a combination of numbers, letters, or symbols assigned by the enterprise to an item that provides for the differentiation of that item from any other like and unlike item and is never used again within the enterprise.

Serial number within the part number or *serial number* means a combination of numbers or letters assigned by the enterprise to an item that provides for the differentiation of that item from any other like item within a part number assignment.

Serialization within the enterprise identifier means each item produced is assigned a serial number that is unique among all the tangible items produced by the enterprise and is never used again. The enterprise is responsible for ensuring unique serialization within the enterprise identifier.

Serialization within the part number means each item of a particular part number is assigned a unique serial number within that part number assignment. The enterprise is responsible for ensuring unique serialization within the part number within the enterprise identifier.

Unique item identification means marking an item with machine-readable data elements to distinguish it from all other like and unlike items.

Unique item identifier means a set of data marked on items that is globally unique, unambiguous, and robust enough to ensure data information quality throughout life and to support multi-faceted business applications and users.

(b) *Unique item identification.*

(1) The Contractor shall provide unique item identification marking, or a DoD recognized unique identification equivalent (if one is not already marked), for—

(i) All items delivered under this contract for which the Government's acquisition cost is $5,000 or more; and

(ii) The following items to be delivered under this contract:

Contract Line Item	Description

(2) The unique item identifier and the component data elements of the unique item identifier shall not change over the life of the item.

(3) *Data elements.*

(i) For items that are serialized within the enterprise identifier, the unique identifier shall include the data elements of issuing agency code, enterprise identifier, and a unique serial number.

(ii) For items that are serialized within the part number within the enterprise identifier, the unique identifier shall include the data elements of issuing agency code, enterprise identifier, the original part number, and the serial number.

(iii) The issuing agency code shall be derived from the data qualifier for the enterprise identifier.

(iv) The issuing agency code shall not be placed on the item.

(4) *Data syntax and semantics.* The Contractor shall—

(i) Mark the encoded data elements (except issuing agency code) on the item using any of the following three types of data qualifiers, as specified elsewhere in the contract:

(A) Data Identifiers (DIs) (Format 06).

(B) Application Identifiers (AIs) (Format 05), in accordance with ISO/IEC International Standard 15418, Information Technology—EAN/UCC Application Identifiers and ASC MH 10 Data Identifiers and ASC MH 10 Data Identifiers and Maintenance.

(C) Text Element Identifiers (TEIs), in accordance with the DoD collaborative solution ''DD'' format for use until the final solution is approved by ISO JTC1/SC 31. (**Note:** The DoD collaborative solution is described in Appendix D of the DoD guide to Uniquely Identifying Tangible Items, available at *http://www.acq.osd.mil/uid*.)

(ii) Use high capacity automatic identification devices in unique identification that conform to ISO/IEC International Standard 15434, Information Technology—Syntax for High Capacity Automatic Data Capture Media.

(5) *Marking items.* Unless otherwise specified in the contract, data elements for unique identification (enterprise identifier, serial number, and, for serialization within the part number only, original part number) shall be placed on items requiring marking by paragraph (b)(1) of this clause in accordance with the standard practice of MIL–STD–130K, Identification Marking of U.S. Military Property.

(c) *Commonly accepted commercial marks.* The Contractor shall provide commonly accepted commercial marking for items delivered under this contract that are not required to have unique item identification or a DoD-recognized unique identification equivalent under paragraph (b) of this clause.

(d) *Item records.* Records of all items delivered to the Government shall include, at a minimum, the following information:

(1) Description.

(2) Unique item identifier concatenated or other approved item identifier.

(3) Quantity shipped.

(4) Unit of measure.

(5) Acquisition cost.

(6) Ship-to code.

(7) Shipment date.

(8) Enterprise identifier.

(9) Serial number.

(10) Original part number.

(e) *Valuation.* The Contractor shall report the Government's acquisition cost of items delivered under this contract as follows:

(1) Except as specified in paragraph (e)(3)(ii) of this clause, the Contractor shall report the Government's acquisition cost of items under separately priced contract line item numbers, subline item numbers, or informational subline item numbers.

(2) When informational subline items are used only for identification of the Government's acquisition cost, they will be clearly identified as such and shall not be used as a basis for payment.

(3) The Contractor shall normally report the Government's acquisition cost for items under cost-type contracts to the Contracting Officer at the time of delivery, but in no event later than the close of the Contractor's fiscal period during which the delivery was made.

(i) When a unique item identifier is required, the Contractor shall report the actual cost that has been accumulated for each item identified in paragraph (b) of this clause and set forth in a contract line item or subline item.

(ii) When a commonly accepted commercial mark is required, the Contractor shall report the actual cost that has been accumulated for each item, whether or not listed in paragraph (b) of this clause. In many cases, such items will have been combined under a single contract line item or subline item.

(f) *Subcontracts.* The Contractor shall include the requirements of this clause in all subcontracts that will result in delivery of items under this contract.

(End of clause)

[FR Doc. 03–25827 Filed 10–9–03; 8:45 am]

BILLING CODE 5001–08–P

Proposed Rules

Federal Register

Vol. 68, No. 197

Friday, October 10, 2003

This section of the FEDERAL REGISTER contains notices to the public of the proposed issuance of rules and regulations. The purpose of these notices is to give interested persons an opportunity to participate in the rule making prior to the adoption of the final rules.

DEPARTMENT OF AGRICULTURE

Agricultural Marketing Service

7 CFR Part 923

[Docket No. FV03–923–1 PR]

Sweet Cherries Grown in Designated Counties in Washington; Hearing on Proposed Amendment of Marketing Agreement and Order No. 923

AGENCY: Agricultural Marketing Service, USDA.

ACTION: Notice of hearing on proposed rulemaking.

SUMMARY: Notice is hereby given of a public hearing to receive evidence on six proposed amendments to Marketing Agreement and Order No. 923, which regulate the handling of sweet cherries grown in designated counties in Washington. Four amendments are proposed by the Washington Cherry Marketing Committee (Committee), which is responsible for local administration of the order: Adding the authority for promotion, including paid advertising, and production research projects; adding the authority to recommend additional rates of assessment for individual varieties of cherries; adding the authority for the Committee to accept voluntary contributions for marketing research and promotion, including paid advertising, and production research projects; and adding a public member and alternate public member to the Committee. Two additional amendments are proposed by the Agricultural Marketing Service: establishing tenure limitations for Committee members; and requiring that continuance referenda be conducted on a periodic basis to ascertain grower support for the order and adding more flexibility in the termination provisions. These proposals are intended to improve the operation and functioning of the Washington sweet cherry marketing order program.

DATES: The hearing will begin at 9 a.m. in Yakima, Washington, on November 18, 2003, and, if necessary, will continue the next day beginning at 9 a.m.

ADDRESSES: The hearing will be held at the W.L. Hansen Building, 105 S. 18th Street, Yakima, Washington 98901.

FOR FURTHER INFORMATION CONTACT: Melissa Schmaedick, Marketing Order Administration Branch, Fruit and Vegetable Programs, AMS, USDA, P.O. Box 1035, Moab, Utah; telephone: (435) 259–7988, Fax: (435) 259–4945.

Small businesses may request information on this proceeding by contacting Jay Guerber, Marketing Order Administration Branch, Fruit and Vegetable Programs, AMS, USDA, room 2525–S, PO Box 96456, Washington, DC 20090–6456; telephone: (202) 720–2491, Fax: (202) 720–8938.

SUPPLEMENTARY INFORMATION: This administrative action is instituted pursuant to the Agricultural Marketing Agreement Act of 1937, as amended (7 U.S.C. 601–674), hereinafter referred to as the ''Act.'' This action is governed by the provisions of sections 556 and 557 of title 5 of the United States Code and, therefore, is excluded from the requirements of Executive Order 12866.

The Regulatory Flexibility Act (5 U.S.C. 601 *et seq.*) seeks to ensure that within the statutory authority of a program, the regulatory and informational requirements are tailored to the size and nature of small businesses. Interested persons are invited to present evidence at the hearing on the possible regulatory and informational impacts of the proposals on small businesses.

The amendments proposed herein have been reviewed under Executive Order 12988, Civil Justice Reform. They are not intended to have retroactive effect. If adopted, the proposed amendments would not preempt any State or local laws, regulations, or policies, unless they present an irreconcilable conflict with the proposals.

The Act provides that administrative proceedings must be exhausted before parties may file suit in court. Under section 608c(15)(A) of the Act, any handler subject to an order may file with USDA a petition stating that the order, any provision of the order, or any obligation imposed in connection with the order is not in accordance with law and request a modification of the order or to be exempted therefrom. A handler is afforded the opportunity for a hearing on the petition. The Act provides that the district court of the United States in any district in which the handler is an inhabitant, or has his or her principal place of business, has jurisdiction to review the USDA's ruling on the petition, provided an action is filed not later than 20 days after the date of the entry of the ruling.

The hearing is called pursuant to the provisions of the Act and the applicable rules of practice and procedure governing the formulation of marketing agreements and orders (7 CFR part 900).

The Committee proposes the following amendments as summarized below:

1. Amend the order to authorize promotional activities, including paid advertising, and production research projects.
2. Amend the order to authorize the recommendation of additional rates of assessment for individual varieties of cherries.
3. Allow the Committee to accept voluntary contributions for marketing research and promotion, including paid advertising, and production research projects.
4. Add a public member and alternate public member to the Committee.

The Committee works with USDA in administering the order. These proposals have not received the approval of the Department. The Committee believes that the proposed changes would improve the administration, operation, and functioning of the order.

In addition, USDA proposes adding two provisions that would help assure that the operation of the program conforms to current Department policy. These provisions would establish tenure requirements for Committee members and require that continuance referenda be conducted on a periodic basis to ascertain industry support for the order and adding more flexibility in the termination provisions. USDA also proposes to allow such conforming changes to the order that may be necessary as a result of the hearing.

The public hearing is held for the purpose of: (i) Receiving evidence about the economic and marketing conditions which relate to the proposed amendments of the order; (ii)

determining whether there is a need for the proposed amendments to the order; and (iii) determining whether the proposed amendments or appropriate modifications thereof will tend to effectuate the declared policy of the Act.

Testimony is invited at the hearing on all the proposals and recommendations contained in this notice, as well as any appropriate modifications or alternatives.

All persons wishing to submit written material as evidence at the hearing should be prepared to submit four copies of such material at the hearing and should have prepared testimony available for presentation at the hearing.

From the time the notice of hearing is issued and until the issuance of a final decision in this proceeding, USDA employees involved in the decisional process are prohibited from discussing the merits of the hearing issues on an *ex parte* basis with any person having an interest in the proceeding. The prohibition applies to employees in the following organizational units: Office of the Secretary of Agriculture; Office of the Administrator, AMS; Office of the General Counsel; and the Fruit and Vegetable Programs, AMS.

Procedural matters are not subject to the above prohibition and may be discussed at any time.

List of Subjects in 7 CFR Part 923

Cherries, Marketing agreements, Reporting and recordkeeping requirements.

PART 923—SWEET CHERRIES GROWN IN DESIGNATED COUNTIES IN WASHINGTON

1. The authority citation for 7 CFR part 923 continues to read as follows:

Authority: 7 U.S.C. 601–674.

2. Testimony is invited on the following proposals or appropriate alternatives or modifications to such proposals.

Proposals submitted by the Washington Cherry Marketing Committee:

Proposal No. 1

Amend § 923.45 to read as follows:

§ 923.45 Production and marketing research, promotion and market development.

The committee, with the approval of the Secretary, may establish or provide for the establishment of projects involving production research, marketing research and development, and marketing promotion, including paid advertising, designed to assist, improve, or promote the marketing, distribution, consumption or efficient production of cherries. The expense of such projects shall be paid from funds collected pursuant to §§ 923.41 and 923.43.

Proposal No. 2

In § 923.41, redesignate paragraph (c) as paragraph (d) and add a new paragraph (c) to read as follows:

§ 923.41 Assessments.

* * * * *

(c) Based upon a recommendation of the committee or other available data, the Secretary shall fix the rate of assessment that handlers shall pay on all cherries handled during each fiscal period, and may also fix supplemental rates of assessment on individual varieties or subvarieties to secure sufficient funds to provide for projects authorized under § 923.45. At any time during the fiscal period when it is determined on the basis of a committee recommendation or other information that a different rate is necessary for all cherries or for any varieties or subvarieties, the Secretary may modify a rate of assessment and such new rate shall apply to any or all varieties or subvarieties that are shipped during the fiscal period.

* * * * *

Proposal No. 3

Add a new § 923.43 to read as follows:

§ 923.43 Contributions.

The committee may accept voluntary contributions but these shall only be used to pay expenses incurred pursuant to § 923.45. Furthermore, such contributions shall be free from any encumbrances by the donor and the committee shall retain complete control of their use.

Proposal No. 4

Revise § 923.20 to read as follows:

§ 923.20 Establishment and membership.

There is hereby established a Washington Cherry Marketing Committee consisting of seventeen members, each of whom shall have an alternate who shall have the same qualifications as the member for whom he or she is an alternate. Ten members and their respective alternates shall be growers or officers or employees of corporate growers. Six of the members and their respective alternates shall be handlers, or officers or employees of handlers. One member and his or her respective alternate shall be a public member who is neither a grower nor a handler. The ten members of the committee who are growers or employees or officers of corporate growers are referred to in this part as ''grower members'' of the committee; and six members of the committee who shall be handlers, or officers or employees of handlers are referred to in this part as ''handler members'' of the committee. Five of the grower members and their respective alternates shall be producers of cherries in District 1, and five of the grower members and their respective alternates shall be producers of cherries in District 2. Three of the handler members and their respective alternates shall be handlers of cherries in District 1, and three of the handler members and their representative alternates shall be handlers of cherries in District 2.

Amend § 923.22 by adding a new paragraph (b)(4) to read as follows:

§ 923.22 Nomination.

* * * * *

(4) The grower and handler members of the committee shall nominate the public member and alternate public member at the first meeting following the selection of members for a new term of office.

USDA proposes the following:

Proposal No. 5

Revise § 923.21 to read as follows:

§ 923.21 Term of office.

The term of office of each member and alternate member of the committee shall be for two years beginning April 1 and ending March 31. Members and alternate members shall serve in such capacities for the portion of the term of office for which they are selected and have qualified and until their respective successors are selected and have qualified. Committee members shall not serve more than three consecutive terms. Members who have served for three consecutive terms must leave the committee for at least one year before becoming eligible to serve again.

Proposal No. 6

In § 923.64, redesignate paragraph (d) as paragraph (e), and add a new paragraph (d) to read as follows:

§ 923.64 Termination.

* * * * *

(c) The Secretary shall terminate the provisions of this part whenever it is found that such termination is favored by a majority of producers who, during a representative period, have been engaged in the production of cherries: *Provided*, that such majority has, during such representative period, produced for market more than 50 percent of the volume of such cherries produced for market.

(d) The Secretary shall conduct a referendum six years after the effective date of this section and every sixth year thereafter, to ascertain whether continuance of this subpart is favored by producers. The Secretary may terminate the provisions of this subpart at the end of any fiscal period in which the Secretary has found that continuance of this subpart is not favored by producers who, during a representative period determined by the Secretary, have been engaged in the production of cherries in the production area.

* * * * *

Proposal No. 7

Make such changes as may be necessary to the order to conform with any amendment thereto that may result from the hearing.

Dated: October 6, 2003.

A.J. Yates,

Administrator, Agricultural Marketing Service.

[FR Doc. 03–25672 Filed 10–9–03; 8:45 am]

BILLING CODE 3410–02–M

DEPARTMENT OF AGRICULTURE

Agricultural Marketing Service

7 CFR Part 946

[Docket No. FV03–946–1 PR]

Irish Potatoes Grown in Washington; Hearing on Proposed Amendment of Marketing Agreement and Order No. 946

AGENCY: Agricultural Marketing Service, USDA.

ACTION: Notice of hearing on proposed rulemaking.

SUMMARY: Notice is hereby given of a public hearing to receive evidence on nine proposed amendments to Marketing Agreement and Order No. 946, which regulate the handling of Irish potatoes grown in Washington. Seven amendments are proposed by the State of Washington Potato Committee (Committee), which is responsible for local administration of the order. These are: adding the authority to establish container and marking regulations; requiring Committee producer members to have produced potatoes for the fresh market in at least 3 out of the last 5 years prior to nomination; incorporating language currently existing in the Rules and Regulations subpart pertaining to selection and establishment of districts; requiring Committee nominees to submit a signed acceptance letter prior to appointment by the Agricultural Marketing Service (AMS); allowing for nominations to be held at large industry meetings; adding the authority to change the size of the Committee; and adding the authority to allow for additional alternates to serve when a Committee member and that member's alternate are unable to serve. AMS proposed two additional amendments to establish tenure limitations for Committee members and require that continuance referenda be conducted on a periodic basis to ascertain grower support for the order.

DATES: The hearing will begin at 9 a.m. in Moses Lake, Washington, on November 20, 2003.

ADDRESSES: The hearing will be held at the Best Western Hallmark Inn, 3000 Marina Drive, Moses Lake, Washington, 98837, (866)–603–9330.

FOR FURTHER INFORMATION CONTACT: Melissa Schmaedick, Marketing Order Administration Branch, Fruit and Vegetable Programs, AMS, USDA, PO Box 1035, Moab, Utah; telephone: (435) 259–7988, Fax: (435) 259–4945.

Small businesses may request information on this proceeding by contacting Jay Guerber, Marketing Order Administration Branch, Fruit and Vegetable Programs, AMS, USDA, room 2525–S, PO Box 96456, Washington, DC 20090–6456; telephone: (202) 720–2491, Fax: (202) 720–8938.

SUPPLEMENTARY INFORMATION: This administrative action is instituted pursuant to the Agricultural Marketing Agreement Act of 1937, as amended (7 U.S.C. 601–674), hereinafter referred to as the ''Act.'' This action is governed by the provisions of sections 556 and 557 of title 5 of the United States Code and, therefore, is excluded from the requirements of Executive Order 12866.

The Regulatory Flexibility Act (5 U.S.C. 601 *et seq.*) seeks to ensure that within the statutory authority of a program, the regulatory and informational requirements are tailored to the size and nature of small businesses. Interested persons are invited to present evidence at the hearing on the possible regulatory and informational impacts of the proposals on small businesses.

The amendments proposed herein have been reviewed under Executive Order 12988, Civil Justice Reform. They are not intended to have retroactive effect. If adopted, the proposed amendments would not preempt any State or local laws, regulations, or policies, unless they present an irreconcilable conflict with the proposals.

The Act provides that administrative proceedings must be exhausted before parties may file suit in court. Under section 608c(15)(A) of the Act, any handler subject to an order may file with USDA a petition stating that the order, any provision of the order, or any obligation imposed in connection with the order is not in accordance with law and request a modification of the order or to be exempted therefrom. A handler is afforded the opportunity for a hearing on the petition. The Act provides that the district court of the United States in any district in which the handler is an inhabitant, or has his or her principal place of business, has jurisdiction to review the USDA's ruling on the petition, provided an action is filed not later than 20 days after the date of the entry of the ruling.

The hearing is called pursuant to the provisions of the Act and the applicable rules of practice and procedure governing the formulation of marketing agreements and orders (7 CFR part 900).

The Committee proposes the following amendments as summarized below.

1. Amend the order to authorize container and marking regulations. This would encompass size, capacity, weight, dimensions, pack, and marking or labeling of the container, or containers, which may be used in packaging or handling of Irish potatoes grown in Washington.

2. Amend the order to add language to require production for the fresh market in at least 3 out of 5 years preceding nomination to the committee for all producer members.

3. Make administrative changes in § 946.25 ''Selection'' and § 946.31 ''District'' to incorporate language currently in the Rules and Regulation subpart.

4. Amend the order to add language requiring Committee nominees to submit a signed letter of acceptance prior to selection by AMS.

5. Allow for nominations to be held at any industry meeting rather than requiring separate meetings in each of the districts, as currently required by the order.

6. Amend the order to authorize the Committee to recommend changes in the number of Committee members and alternates. Such a recommendation would require an analysis of certain factors within the industry and approval by the Department.

7. Allow an alternate member of the same classification (producer or handler) to serve in a member's place and stead in the event a Committee member and that member's alternate are unable to attend a Committee meeting.

The Committee works with USDA in administering the order. These proposals have not received the approval of the Department. The Committee believes that the proposed changes would improve the administration, operation, and functioning of the order.

In addition, AMS proposes adding two provisions which would help assure that operation of the program conforms to current Department policy. The first provision would establish a limit on the number of consecutive terms a person may serve as member on the Committee. The second provision would require that continuance referenda be conducted on a periodic basis to ascertain industry support for the order. AMS also proposes to allow such changes to the order as may be necessary to conform with any amendment that may result from the hearing.

The public hearing is held for the purpose of: (i) Receiving evidence about the economic and marketing conditions which relate to the proposed amendments of the order; (ii) determining whether there is a need for the proposed amendments to the order; and (iii) determining whether the proposed amendments or appropriate modifications thereof will tend to effectuate the declared policy of the Act.

Testimony is invited at the hearing on all the proposals and recommendations contained in this notice, as well as any appropriate modifications or alternatives.

All persons wishing to submit written material as evidence at the hearing should be prepared to submit four copies of such material at the hearing and should have prepared testimony available for presentation at the hearing.

From the time the notice of hearing is issued and until the issuance of a final decision in this proceeding, USDA employees involved in the decisional process are prohibited from discussing the merits of the hearing issues on an *ex parte* basis with any person having an interest in the proceeding. The prohibition applies to employees in the following organizational units: Office of the Secretary of Agriculture; Office of the Administrator, AMS; Office of the General Counsel; and the Fruit and Vegetable Programs, AMS.

Procedural matters are not subject to the above prohibition and may be discussed at any time.

List of Subjects in 7 CFR Part 946

Marketing agreements, Potatoes, Reporting and recordkeeping requirements.

PART 946—IRISH POTATOES GROWN IN WASHINGTON

1. The authority citation for 7 CFR part 946 continues to read as follows:

Authority: 7 U.S.C. 601–674.

2. Testimony is invited on the following proposals or appropriate alternatives or modifications to such proposals.

Proposals submitted by the State of Washington Potato Committee:

Proposal No. 1

Amend § 946.52 by adding a new paragraph (a)(5) to read as follows:

§ 946.52 Issuance of regulations.

(a) * * *

(5) To regulate the size, capacity, weight, dimensions, pack, and marking or labeling of the container, or containers, which may be used in the packing or handling of potatoes, or both.

* * * * *

Add a new § 946.17 to read as follows:

§ 946.17 Pack.

Pack means a quantity of potatoes in any type of container and which falls within the specific weight limits or within specific grade and/or size limits, or any combination thereof, recommended by the committee and approved by the Secretary.

Add a new § 946.18 to read as follows:

§ 946.18 Container.

Container means a sack, box, bag, crate, hamper, basket, carton, package, barrel, or any other type of receptacle used in the packing, transportation, sale or other handling of potatoes.

Proposal No. 2

Revise § 946.22 to read as follows:

§ 946.22 Establishment and membership.

The State of Washington Potato Committee consisting of fifteen members, of whom ten shall be producers who have produced potatoes for the fresh market for at least three out of the last five years prior to nomination and five shall be handlers, is hereby established. For each member of the committee there shall be an alternate who shall have the same qualifications as the member.

Proposal No. 3

Amend § 946.25 by revising paragraph (c) to read as follows:

§ 946.25 Selection.

* * * * *

(c) The Secretary shall select committee membership so that, during each fiscal period, each district, as designated in § 946.31, will be represented as follows:

(1) District No. 1—Three producer members and one handler member;

(2) District No. 2—Two producer members and one handler member;

(3) District No. 3—Two producer members and one handler member;

(4) District No. 4—Two producer members and one handler member;

(5) District No. 5—One producer member and one handler member.

Revise § 946.31 to read as follows:

§ 946.31 Districts.

For the purpose of determining the basis for selecting committee members, the following districts of the production area are hereby established:

(a) District No. 1—The counties of Ferry, Stevens, Pend Oreille, Spokane, Whitman, and Lincoln, plus the East Irrigation District of the Columbia Basin Project, plus the area of Grant County not included in either the Quincy or South Irrigation Districts which lies east of township vertical line R27E, plus the area of Adams County not included in either of the South or Quincy Irrigation Districts.

(b) District No. 2—The counties of Kittitas, Douglas, Chelan, and Okanogan, plus the Quincy Irrigation District of the Columbia Basin Project, plus the area of Grant County not included in the East or South Irrigation Districts which lies west of township line R28E.

(c) District No. 3—The counties of Benton, Klickitat, and Yakima.

(d) District No. 4—The counties of Walla Walla, Columbia, Garfield, and Asotin, plus the South Irrigation District of the Columbia Basin Project, plus the area of Franklin County not included in the South District.

(e) District No. 5—All of the remaining counties in the State of Washington, not included in Districts No. 1, 2, 3, and 4 of this section.

Proposal No. 4

Revise § 946.26 to read as follows:

§ 946.26 Qualification and acceptance.

Any person nominated to serve as a member or alternate member of the committee shall, prior to selection by USDA, qualify by filing a written background and acceptance statement indicating such person's willingness to serve in the position for which nominated.

Proposal No. 5

Amend § 946.32 by revising paragraph (a) to read as follows:

§ 946.32 Nomination.

* * * * *

(a) A meeting of producers and handlers shall be held by the Committee not later than May 1 of each year to designate nominees for members and alternates to the Committee; or the Committee may conduct nominations by mail in a manner recommended by the Committee and approved by the Secretary; and, in arranging for such meetings, the Committee may, if it deems desirable, utilize the services and facilities of other existing organizations;

* * * * *

Proposal No. 6

In § 946.22, designate the current text as paragraph (a) and adding a new paragraph (b) to read as follows:

§ 946.22 Establishment and membership.

* * * * *

(b) The Secretary, upon recommendation of the committee, may reestablish districts, may reapportion members among districts, may change the number of members and alternates, and may change the composition by changing the ratio of members, including their alternates. In recommending any such changes, the following shall be considered:

(1) Shifts in acreage within districts and within the production area during recent years;

(2) The importance of new production in its relation to existing districts;

(3) The equitable relationship between membership and districts;

(4) Economies to result for growers in promoting efficient administration due to redistricting or reapportionment of members within districts and;

(5) Other relevant factors.

Proposal No. 7

In § 946.23, designate the current text as paragraph (a) and add a new paragraph (b) to read as follows:

§ 946.23 Alternate members.

* * * * *

(b) In the event both a member and his or her alternate are unable to attend a committee meeting, the committee members present may designate another alternate of the same classification (handler or producer) to serve in such member's place and stead.

USDA proposes the following:

Proposal No. 8

Amend § 946.27 by revising paragraph (a) to read as follows:

§ 946.27 Term of office.

(a) The term of office of each member and alternate member of the committee shall be for three years beginning July 1 and continuing until their successors are selected and have qualified: *Provided, however,* That the terms of office of the initial committee under the amended order shall be determined by the Secretary so that the terms of office of one-third of the initial members and alternates shall be for 1 year, one-third for two years, and one-third for 3 years. Committee members shall not serve more than two consecutive terms. Members who have served for two consecutive terms must leave the committee for at least one year before becoming eligible to serve again.

* * * * *

Proposal No. 9

In § 946.63, redesignate paragraph (d) as paragraph (e) and add a new paragraph (d) to read as follows:

§ 946.63 Termination.

* * * * *

(d) The Secretary shall conduct a referendum six years after the effective date of this paragraph and every sixth year thereafter to ascertain whether continuance of this part is favored by growers.

* * * * *

Proposal No. 10

Make such changes as may be necessary to the order to conform with any amendment thereto that may result from the hearing.

Dated: October 6, 2003.

A.J. Yates,

Administrator, Agricultural Marketing Service.

[FR Doc. 03–25671 Filed 10–9–03; 8:45 am]

BILLING CODE 3410–02–P

DEPARTMENT OF HOMELAND SECURITY

Coast Guard

33 CFR Part 100

[CGD05–03–132]

RIN 1625–AA08

Special Local Regulations for Marine Events; Spa Creek, Annapolis, MD

AGENCY: Coast Guard, DHS.

ACTION: Notice of proposed rulemaking.

SUMMARY: The Coast Guard proposes to establish temporary special local regulations during the ''International Tug-of-War'', a marine event to be held over the waters of Spa Creek between Eastport and Annapolis, Maryland. These special local regulations are necessary to provide for the safety of life on navigable waters during the event. This action is intended to restrict vessel traffic in portions of Spa Creek during the event.

DATES: Comments and related material must reach the Coast Guard on or before November 10, 2003.

ADDRESSES: You may mail comments and related material to Commander (oax), Fifth Coast Guard District, 431 Crawford Street, Portsmouth, Virginia 23704–5004, hand-deliver them to Room 119 at the same address between 9 a.m. and 2 p.m., Monday through Friday, except Federal holidays, or fax them to (757) 398–6203. The Auxiliary and Recreational Boating Safety Branch, Fifth Coast Guard District, maintains the public docket for this rulemaking. Comments and material received from the public, as well as documents indicated in this preamble as being available in the docket, will become part of this docket and will be available for inspection or copying at the above address between 9 a.m. and 2 p.m., Monday through Friday, except Federal holidays.

FOR FURTHER INFORMATION CONTACT: S.L. Phillips, Project Manager, Auxiliary and Recreational Boating Safety Branch, at (757) 398–6204.

SUPPLEMENTARY INFORMATION:

Request for Comments

We encourage you to participate in this rulemaking by submitting comments and related material. If you do so, please include your name and address, identify the docket number for this rulemaking (CGD05–03–132), indicate the specific section of this document to which each comment applies, and give the reason for each comment. Please submit all comments and related material in an unbound format, no larger than 8½ by 11 inches, suitable for copying. If you would like to know they reached us, please enclose a stamped, self-addressed postcard or envelope. We will consider all comments and material received during the comment period. We may change this proposed rule in view of them.

In order to provide notice and an opportunity to comment before issuing an effective rule, we are providing a shorter than normal comment period. A 20-day comment period is sufficient to allow those who might be affected by this rulemaking to submit their comments because the regulations have a narrow, local application, and there will be local notifications in addition to the **Federal Register** publication such as press releases, marine information broadcasts, and the Local Notice to Mariners. We also expect to make the final rule effective less than 30 days

after its publication in the **Federal Register.**

Public Meeting

We do not now plan to hold a public meeting. But you may submit a request for a meeting by writing to the address listed under **ADDRESSES** explaining why one would be beneficial. If we determine that one would aid this rulemaking, we will hold one at a time and place announced by a later notice in the **Federal Register**.

Background and Purpose

On November 8, 2003, the City of Annapolis will sponsor the ''International Tug-of-War'' across the waters of Spa Creek between Eastport and Annapolis, Maryland. The event will consist of a tug-of-war between teams on the Eastport side of Spa Creek pulling against teams on the Annapolis side of Spa Creek. The opposing teams will pull a floating rope approximately 1800 feet in length, spanning Spa Creek. A fleet of spectator vessels is anticipated. Due to the need for vessel control while the rope is spanned across Spa Creek, vessel traffic would be temporarily restricted to provide for the safety of spectators, participants and transiting vessels.

Discussion of Proposed Rule

The Coast Guard proposes to establish temporary special local regulations on specified waters of Spa Creek. The regulated area would include a 400′ buffer on either side of the rope that would span Spa Creek from shoreline to shoreline. The temporary special local regulations would be enforced from 10:30 a.m. to 2:30 p.m. on November 8, 2003, and would restrict general navigation in the regulated area during the event. Except for participants and vessels authorized by the Coast Guard Patrol Commander, no person or vessel may enter or remain in the regulated area. The Coast Guard Patrol Commander may stop the event to allow vessels to transit the regulated area.

Regulatory Evaluation

This proposed rule is not a ''significant regulatory action'' under section 3(f) of Executive Order 12866, Regulatory Planning and Review, and does not require an assessment of potential costs and benefits under section 6(a)(3) of that Order. The Office of Management and Budget has not reviewed it under that Order. It is not ''significant'' under the regulatory policies and procedures of the Department of Homeland Security (DHS).

We expect the economic impact of this proposed rule to be so minimal that a full Regulatory Evaluation under the regulatory policies and procedures of DHS is unnecessary. Although this proposed regulation would prevent traffic from transiting a portion of Spa Creek during the event, the effect of this proposed regulation would not be significant due to the limited duration that the regulated area would be in effect and the extensive advance notifications that would be made to the maritime community via the Local Notice to Mariners, marine information broadcasts, and area newspapers, so mariners can adjust their plans accordingly. Additionally, the proposed regulated area has been narrowly tailored to impose the least impact on general navigation yet provide the level of safety deemed necessary. Vessel traffic would be able to transit the regulated area when the Coast Guard Patrol Commander deems it is safe to do so.

Small Entities

Under the Regulatory Flexibility Act (5 U.S.C. 601–612), we have considered whether this proposed rule would have a significant economic impact on a substantial number of small entities. The term ''small entities'' comprises small businesses, not-for-profit organizations that are independently owned and operated and are not dominant in their fields, and governmental jurisdictions with populations of less than 50,000.

The Coast Guard certifies under 5 U.S.C. 605(b) that this proposed rule would not have a significant economic impact on a substantial number of small entities. This proposed rule would affect the following entities, some of which might be small entities: the owners or operators of vessels intending to transit or anchor in a portion of Spa Creek during the event.

This proposed rule would not have a significant economic impact on a substantial number of small entities for the following reasons. This proposed rule would be in effect for only a 4-hour period. Vessel traffic would be able to transit the regulated area when the Coast Guard Patrol Commander deems it is safe to do so. Before the enforcement period, we would issue maritime advisories so mariners can adjust their plans accordingly.

If you think that your business, organization, or governmental jurisdiction qualifies as a small entity and that this proposed rule would have a significant economic impact on it, please submit a comment (*see* **ADDRESSES**) explaining why you think it qualifies and how and to what degree this proposed rule would economically affect it.

Assistance for Small Entities

Under section 213(a) of the Small Business Regulatory Enforcement Fairness Act of 1996 (Public Law 104–121), we want to assist small entities in understanding this proposed rule so that they can better evaluate its effects on them and participate in the rulemaking. If the rule would affect your small business, organization, or governmental jurisdiction and you have questions concerning its provisions or options for compliance, please contact the address listed under **ADDRESSES.**

Small businesses may send comments on the actions of Federal employees who enforce, or otherwise determine compliance with, Federal regulations to the Small Business and Agriculture Regulatory Enforcement Ombudsman and the Regional Small Business Regulatory Fairness Boards. The Ombudsman evaluates these actions annually and rates each agency's responsiveness to small business. If you wish to comment on actions by employees of the Coast Guard, call 1–888–REG–FAIR (1–888–734–3247).

Collection of Information

This proposed rule would call for no new collection of information under the Paperwork Reduction Act of 1995 (44 U.S.C. 3501–3520).

Federalism

A rule has implications for federalism under Executive Order 13132, Federalism, if it has a substantial direct effect on State or local governments and would either preempt State law or impose a substantial direct cost of compliance on them. We have analyzed this proposed rule under that Order and have determined that it does not have implications for federalism.

Unfunded Mandates Reform Act

The Unfunded Mandates Reform Act of 1995 (2 U.S.C. 1531–1538) requires Federal agencies to assess the effects of their discretionary regulatory actions. In particular, the Act addresses actions that may result in the expenditure by a State, local, or tribal government, in the aggregate, or by the private sector of $100,000,000 or more in any one year. Though this proposed rule would not result in such an expenditure, we do discuss the effects of this rule elsewhere in this preamble.

Taking of Private Property

This proposed rule would not effect a taking of private property or otherwise

have taking implications under Executive Order 12630, Governmental Actions and Interference with Constitutionally Protected Property Rights.

Civil Justice Reform

This proposed rule meets applicable standards in sections 3(a) and 3(b)(2) of Executive Order 12988, Civil Justice Reform, to minimize litigation, eliminate ambiguity, and reduce burden.

Protection of Children

We have analyzed this proposed rule under Executive Order 13045, Protection of Children from Environmental Health Risks and Safety Risks. This proposed rule is not an economically significant rule and would not create an environmental risk to health or risk to safety that might disproportionately affect children.

Indian Tribal Governments

This proposed rule does not have tribal implications under Executive Order 13175, Consultation and Coordination with Indian Tribal Governments, because it would not have a substantial direct effect on one or more Indian tribes, on the relationship between the Federal Government and Indian tribes, or on the distribution of power and responsibilities between the Federal Government and Indian tribes.

Energy Effects

We have analyzed this proposed rule under Executive Order 13211, Actions Concerning Regulations That Significantly Affect Energy Supply, Distribution, or Use. We have determined that it is not a ''significant energy action'' under that order because it is not a ''significant regulatory action'' under Executive Order 12866 and is not likely to have a significant adverse effect on the supply, distribution, or use of energy. The Administrator of the Office of Information and Regulatory Affairs has not designated it as a significant energy action. Therefore, it does not require a Statement of Energy Effects under Executive Order 13211.

Environment

We prepared an ''Environmental Assessment'' in accordance with Commandant Instruction M16475.1D, and determined that this proposed rule would not significantly affect the quality of the human environment. The ''Environmental Assessment'' and ''Finding of No Significant Impact'' is available in the docket where indicated under **ADDRESSES.**

List of Subjects in 33 CFR Part 100

Marine safety, Navigation (water), Reporting and recordkeeping requirements, Waterways.

For the reasons discussed in the preamble, the Coast Guard proposes to amend 33 CFR Part 100 as follows:

PART 100—SAFETY OF LIFE ON NAVIGABLE WATERS

1. The authority citation for part 100 continues to read as follows:

Authority: 33 U.S.C. 1233; Department of Homeland Security Delegation No. 0170.1.

2. Add a temporary § 100.35T–05–132 to read as follows: *§ 100.35T–05–132, Spa Creek, Annapolis, MD.*

(a) *Regulated area.* The regulated area is established for the waters of Spa Creek from shoreline to shoreline, extending 400′ from either side of a rope spanning Spa Creek from a position at latitude 38°58′37″ N, longitude 076°29′04″ W on the Annapolis shoreline to a position at 38°58′26″ N, longitude 076°28′54″ W on the Eastport shoreline. All coordinates reference Datum NAD 1983.

(b) *Definitions:*

Coast Guard Patrol Commander means a commissioned, warrant, or petty officer of the Coast Guard who has been designated by the Commander, Coast Guard Activities Baltimore.

Official Patrol means any vessel assigned or approved by Commander, Coast Guard Activities Baltimore with a commissioned, warrant, or petty officer on board and displaying a Coast Guard ensign.

Participant means all vessels participating in the ''International Tug of War'' under the auspices of the Marine Event Permit issued to the event sponsor and approved by Commander, Coast Guard Activities Baltimore.

(c) *Special local regulations:*

(1) Except for event participants and persons or vessels authorized by the Coast Guard Patrol Commander, no person or vessel may enter or remain in the regulated area.

(2) The operator of any vessel in the regulated area shall:

(i) Stop the vessel immediately when directed to do so by any official patrol.

(ii) Proceed as directed by any official patrol.

(iii) Unless otherwise directed by the official patrol, operate at a minimum wake speed not to exceed six (6) knots.

(d) *Effective dates:* This section is in effect from 10:30 a.m. to 2:30 p.m. on November 8, 2003.

Dated: September 17, 2003.

Sally Brice-O'Hara,

Rear Admiral, U.S. Coast Guard, Commander, Fifth Coast Guard District.

[FR Doc. 03–25680 Filed 10–9–03; 8:45 am]

BILLING CODE 4910–15–P

DEPARTMENT OF HOMELAND SECURITY

Coast Guard

33 CFR Part 117

[CGD07–03–141]

RIN 1625–AA09

Drawbridge Operation Regulations; Biscayne Bay, Atlantic Intracoastal Waterway, Miami River, Miami-Dade County, FL

AGENCY: Coast Guard, DHS.

ACTION: Notice of proposed rulemaking.

SUMMARY: The Coast Guard proposes to temporarily change the regulations governing the operation of the East and West Spans of the Venetian Causeway bridges across the Miami Beach Channel on the Atlantic Intracoastal Waterway, and the Brickell Avenue and Miami Avenue bridges across the Miami River, Miami-Dade County. This proposed rule would allow these bridges to remain in the closed position during the running of the Miami Tropical Marathon on February 1, 2004.

DATES: Comments and related material must reach the Coast Guard on or before November 10, 2003.

ADDRESSES: You may mail comments and related material to Commander (obr), Seventh Coast Guard District, 909 SE. 1st Ave, Room 432, Miami, FL 33131, which maintains the public docket for this rulemaking. Comments and material received from the public, as well as documents indicated in the preamble as being available in the docket, are part of [CGD07–03–141] and are available for inspection or copying at Commander (obr), Seventh Coast Guard District, 909 SE. 1st Avenue, Room 432, Miami, FL 33131 between 8 a.m. and 4:30 p.m., Monday through Friday, except Federal holidays.

FOR FURTHER INFORMATION CONTACT: Mr. Barry Dragon, Seventh Coast Guard District, Bridge Branch, 909 SE. 1st Ave Miami, FL 33131, telephone number 305–415–6743.

SUPPLEMENTARY INFORMATION:

Request for Comments

We encourage you to participate in this rulemaking by submitting comments and related material. If you

do so, please include your name and address, identify the docket number for this rulemaking [CGD07–03–141], indicate the specific section of this document to which each comment applies, and give the reason for each comment. Please submit all comments and related material in an unbound format, no larger than 8½ by 11 inches, suitable for copying. If you would like to know they reached us, please enclose a stamped, self-addressed postcard or envelope. We will consider all comments and material received during the comment period. We may change this proposed rule in view of them.

Public Meeting

We do not now plan to hold a public meeting. However, you may submit a request for a meeting by writing to Bridge Branch, Seventh Coast Guard District, at the address under **ADDRESSES** explaining why one would be beneficial. If we determine that one would aid this rulemaking, we will hold one at a time and place announced by a later notice in the **Federal Register**.

Background and Purpose

The Miami Tropical Marathon Director has requested that the Coast Guard temporarily change the existing regulations governing the operation of the East and West Spans of the Venetian Causeway bridges, and the Brickell Avenue and Miami Avenue bridges to allow them to remain in the closed position during the running of the Miami Tropical Marathon on February 1, 2004. The marathon route passes over these four bridges and any bridge opening would disrupt the race. Based on the limited time the bridges would be closed, the Coast Guard believes it can accommodate the request while still providing for the reasonable needs of navigation.

The East and West Spans of the Venetian Causeway bridges are located between Miami and Miami Beach. The current regulation governing the operation of the East Span of the Venetian Causeway bridge is published in 33 CFR 117.269 and requires the bridge to open on signal; except that, from November 1 through April 30 from 7:15 a.m. to 8:45 a.m. and from 4:45 p.m. to 6:15 p.m. Monday through Friday, the draw need not be opened. However, the draw shall open at 7:45 a.m., 8:15 a.m., 5:15 p.m., and 5:45 p.m., if any vessels are waiting to pass. The draw shall open on signal on Thanksgiving Day, Christmas Day, New Year's Day, and Washington's Birthday. Moreover, the bridge must open for public vessels of the United States, tugs with tows, regularly scheduled cruise vessels, and vessels in distress.

The regulation governing the West Span of the Venetian Causeway bridge is published in 33 CFR 117.5 and requires the bridge to open on signal.

The operating schedule of the Brickell Avenue and Miami Avenue bridges is published in 33 CFR 117.305 and requires each bridge to open on signal; except that, from 7:30 a.m. to 9 a.m. and 4:30 p.m. to 6 p.m. Monday through Friday except Federal holidays, the draws need not be opened for the passage of vessels. Public vessels of the United States and vessels in an emergency involving danger to life or property are allowed to pass at any time.

We believe that this proposed rule would not adversely affect the reasonable needs of navigation due to the limited time the bridges would be in the closed position.

Discussion of Proposed Rule

The Coast Guard proposes to temporarily change the operating regulations of the East and West Spans of the Venetian Causeway bridges, and the Brickell Avenue and Miami Avenue bridges on February 1, 2004. This proposed rule would allow the East Span of the Venetian Causeway bridge to remain closed from 6:05 a.m. to 8:40 a.m. on February 1, 2004. The proposed rule would allow the West Span of the Venetian Causeway to remain closed from 6:15 a.m. to 9:20 a.m. on February 1, 2004. The Brickell Avenue bridge would be allowed to remain closed from 7:10 a.m. to 11:59 a.m. on February 1, 2004. The Miami Avenue bridge would be allowed to remain closed from 6:25 a.m. to 10 a.m. on February 1, 2004. Public vessels of the United States and vessels in distress shall be passed at anytime.

Regulatory Evaluation

This proposed rule is not a ''significant regulatory action'' under section 3(f) of Executive Order 12866, Regulatory Planning and Review, and does not require an assessment of potential costs and benefits under section 6(a)(3) of that Order. The Office of Management and Budget has not reviewed it under that Order. It is not ''significant'' under the regulatory policies and procedures of the Department of Homeland Security (DHS). The Coast Guard expects the economic impact of this proposed rule to be so minimal that a full Regulatory Evaluation under the policies and procedures of the Department of Homeland Security is unnecessary. The short duration of time during the morning of February 4, 2004 that the bridges will remain in the closed position to facilitate the running of the marathon will have little, if any, economic impact.

Small Entities

Under the Regulatory Flexibility Act (5 U.S.C. 601–612), we have considered whether this proposed rule would have a significant economic impact on a substantial number of small entities. The term ''small entities'' comprises small businesses, not-for-profit organizations that are independently owned and operated and are not dominant in their fields, and governmental jurisdictions with populations of less than 50,000.

The Coast Guard certifies under 5 U.S.C. 605(b) that this proposed rule would not have a significant economic impact on a substantial number of small entities because the proposed rule will only be in effect for a limited period of time and race committee officials are working with affected parties to minimize the impact of this proposed rule.

If you think that your business, organization, or governmental jurisdiction qualifies as a small entity and that this rule would have a significant economic impact on it, please submit a comment (*see* **ADDRESSES**) explaining why you think it qualifies and how and to what degree this rule would economically affect it.

Assistance for Small Entities

Under section 213(a) of the Small Business Regulatory Enforcement Fairness Act of 1996 (Public Law 104–121), we want to assist small entities in understanding this proposed rule so that they can better evaluate its effects on them and participate in the rulemaking. If this proposed rule would affect your small business, organization, or governmental jurisdiction and you have questions concerning its provisions or options for compliance, please consult the person listed under **FOR FURTHER INFORMATION CONTACT.**

Collection of Information

This proposed rule would call for no new collection of information under the Paperwork Reduction Act of 1995 (44 U.S.C. 3501–3520.).

Federalism

A rule has implications for federalism under Executive Order 13132, Federalism, if it has a substantial direct effect on State or local governments and would either preempt State law or impose a substantial direct cost of compliance on them. We have analyzed this proposed rule under that Order and

determined that it does not have implications for federalism.

Unfunded Mandates Reform Act

The Unfunded Mandates Reform Act of 1995 (2 U.S.C. 1531–1538) requires federal agencies to assess the effects of their discretionary regulatory actions. In particular, the Act addresses actions that may result in the expenditure by a State, local, or tribal government, in the aggregate, or by the private sector of $100,000,000 or more in any one year. Though this proposed rule will not result in such an expenditure, we do discuss the effects of this rule elsewhere in this preamble.

Taking of Private Property

This proposed rule would not affect a taking of private property or otherwise have taking implications under Executive Order 12630, Governmental Actions and Interference with Constitutionally Protected Property Rights.

Civil Justice Reform

This proposed rule meets applicable standards in sections 3(a) and 3(b)(2) of Executive Order 12988, Civil Justice Reform, to minimize litigation, eliminate ambiguity, and reduce burden.

Protection of Children

We have analyzed this proposed rule under Executive Order 13045, Protection of Children from Environmental Health Risks and Safety Risks. This rule is not an economically significant rule and would not create an environmental risk to health or risk to safety that might disproportionately affect children.

Indian Tribal Governments

This proposed rule does not have tribal implications under Executive Order 13175, Consultation and Coordination with Indian Tribal Governments, because it would not have a substantial direct effect on one or more Indian tribes, on the relationship between the Federal Government and Indian tribes, or on the distribution of power and responsibilities between the Federal Government and Indian tribes.

Energy Effects

We have analyzed this proposed rule under Executive Order 13211, Actions Concerning Regulations that Significantly Affect Energy Supply, Distribution, or Use. We have determined that it is not a ''significant energy action'' under that order because it is not a ''significant regulatory action'' under Executive Order 12866 and is not likely to have a significant adverse effect on the supply, distribution, or use of energy. It has not been designated by the Administrator of the Office of Information and Regulatory Affairs as a significant energy action. Therefore, it does not require a statement of Energy Effects under Executive Order 13211.

Environment

We have analyzed this proposed rule under Commandant Instruction M16475.lD, which guides the Coast Guard in complying with the National Environmental Policy Act of 1969 (NEPA) (42.U.S.C. 4321–4370f), and have concluded that there are no factors in this case that would limit the use of a categorical exclusion under section 2.B.2 of the Instruction. Therefore, this rule is categorically excluded, under figure 2–1, paragraph (32)(e), of the Instruction, from further environmental documentation.

List of Subjects in 33 CFR Part 117

Bridges.

Regulations

For the reasons discussed in the preamble, the Coast Guard proposes to amend 33 CFR part 117 as follows:

PART 117—DRAWBRIDGE OPERATION REGULATIONS

1. The authority citation for part 117 continues to read as follows:

Authority: 33 U.S.C. 499; Department of Homeland Security Delegation No. 0170.1; 33 CFR 1.05–1(g); section 117.255 also issued under authority of Pub. L. 102–587, 106 Stat. 5039.

2. From 6:15 a.m. until 9:20 a.m. on February 1, 2004, in § 117.261, suspend paragraph (nn) and add temporary paragraph(vv) to read as follows:

§ 117.261 Atlantic Intracoastal Waterway from St. Marys River to Key Largo.

* * * * *

(vv) *West Span of the Venetian Causeway, mile 1088.6 at Miami.* The draw need not open from 6:15 a.m. until 9:20 a.m. on February 1, 2004. Public vessels of the United States and vessels in distress shall be passed at anytime.

§ 117.269 [Suspended]

3. From 6:05 a.m. until 8:40 a.m. on February 1, 2004, temporarily suspend § 117.269.

4. From 6:05 a.m. until 8:40 a.m. on February 1, 2004, add a new § *117.T270 to read as follows:*

§ 117.T270 Biscayne Bay.

The draw of the East Span of the Venetian Causeway bridge across Miami Beach Channel need not open from 6:05 a.m. to 8:40 a.m. on February 1, 2004. Public vessels of the United States and vessels in distress shall be passed at anytime.

§ 117.305 [Suspended]

5. From 6:25 a.m. until 11:59 a.m. on February 1, 2004, temporarily suspend § 117.305.

6. From 6:25 a.m. until 11:59 a.m. on February 1, 2004, add a new § *T117.306 to read as follows:*

§ 117.T306 Miami River.

(a) The draw of each bridge from the mouth to and including the NW. 27th Avenue bridge, mile 3.7 at Miami, except the Miami Avenue and Brickell Avenue bridges, shall open on signal: except that, from 7:30 a.m. to 9 a.m. and from 4:30 p.m. to 6 p.m. Monday through Friday except Federal holidays, the draws need not be opened for the passage of vessels.

(b) The Miami Avenue bridge, across the Miami River, need not open from 6:25 a.m. to 10 a.m. on February 1, 2004 and the Brickell Avenue bridge, across the Miami River, need not open from 7:10 a.m. to 11:59 a.m. on February 1, 2004. Public vessels of the United States and vessels in an emergency involving danger to life or property shall be passed at any time.

Dated: September 18, 2003.

H.E. Johnson, Jr.,

Rear Admiral, U.S. Coast Guard, Commander, Seventh Coast Guard District.

[FR Doc. 03–25682 Filed 10–9–03; 8:45 am]

BILLING CODE 4910–15–P

ENVIRONMENTAL PROTECTION AGENCY

40 CFR Part 52

[PA 201–4401b; FRL–7570–5]

Approval and Promulgation of Air Quality Implementation Plans; Pennsylvania; Revised MOBILE6-Based Motor Vehicle Emission Budget for the Pennsylvania Portion of the Philadelphia-Wilmington-Trenton Ozone Nonattainment Area

AGENCY: Environmental Protection Agency (EPA).

ACTION: Proposed rule.

SUMMARY: EPA proposes to approve the State Implementation Plan (SIP) revision submitted by the Commonwealth of Pennsylvania for the purpose of revising the highway motor vehicle emissions inventories and the 2005 motor vehicle emissions budget for the ozone attainment SIP. In the Final Rules section of this **Federal Register**,

EPA is approving the State's SIP submittal as a direct final rule without prior proposal because the Agency views this as a noncontroversial submittal and anticipates no adverse comments. A detailed rationale for the approval is set forth in the direct final rule. If no adverse comments are received in response to this action, no further activity is contemplated. If EPA receives adverse comments, the direct final rule will be withdrawn and all public comments received will be addressed in a subsequent final rule based on this proposed rule. EPA will not institute a second comment period. Any parties interested in commenting on this action should do so at this time.

DATES: Comments must be received in writing by November 10, 2003.

ADDRESSES: Comments may be submitted either by mail or electronically. Written comments should be mailed to Makeba Morris, Chief, Air Quality Planning Branch, Mailcode 3AP21, U.S. Environmental Protection Agency, Region III, 1650 Arch Street, Philadelphia, Pennsylvania 19103. Electronic comments should be sent either to *morris.makeba@epa.gov* or to *http://www.regulations.gov,* which is an alternative method for submitting electronic comments to EPA. To submit comments, please follow the detailed instructions described in the Supplementary Information section. Copies of the documents relevant to this action are available for public inspection during normal business hours at the Air Protection Division, U.S. Environmental Protection Agency, Region III, 1650 Arch Street, Philadelphia, Pennsylvania 19103. Copies of these related documents can also be reviewed at the Pennsylvania Department of Environmental Protection, P.O. Box 8468, 400 Market Street, Harrisburg, Pennsylvania 17105.

FOR FURTHER INFORMATION CONTACT: Brian Rehn, (215) 814–2176, or by e-mail at *rehn.brian@epa.gov.*

SUPPLEMENTARY INFORMATION: For further information, please see the information provided in the direct final action, with the same title, that is located in the ''Rules and Regulations'' section of this **Federal Register** publication.

You may submit comments either electronically or by mail. To ensure proper receipt by EPA, identify the appropriate rulemaking identification number PA 201–4401 in the subject line on the first page of your comment. Please ensure that your comments are submitted within the specified comment period. Comments received after the close of the comment period will be marked ''late.'' EPA is not required to consider these late comments.

1. *Electronically.* If you submit an electronic comment as prescribed below, EPA recommends that you include your name, mailing address, and an e-mail address or other contact information in the body of your comment. Also include this contact information on the outside of any disk or CD ROM you submit, and in any cover letter accompanying the disk or CD ROM. This ensures that you can be identified as the submitter of the comment and allows EPA to contact you in case EPA cannot read your comment due to technical difficulties or needs further information on the substance of your comment. EPA's policy is that EPA will not edit your comment, and any identifying or contact information provided in the body of a comment will be included as part of the comment that is placed in the official public docket. If EPA cannot read your comment due to technical difficulties and cannot contact you for clarification, EPA may not be able to consider your comment.

i. *E-mail.* Comments may be sent by electronic mail (e-mail) to *morris.makeba@epa.gov*, attention PA 201–4401. EPA's e-mail system is not an ''anonymous access'' system. If you send an e-mail comment directly without going through Regulations.gov, EPA's e-mail system automatically captures your e-mail address. E-mail addresses that are automatically captured by EPA's e-mail system are included as part of the comment that is placed in the official public docket.

ii. *Regulations.gov.* Your use of Regulation.gov is an alternative method of submitting electronic comments to EPA. Go directly to *http://www.regulations.gov*, then select ''Environmental Protection Agency'' at the top of the page and use the ''go'' button. The list of current EPA actions available for comment will be listed. Please follow the online instructions for submitting comments. The system is an ''anonymous access'' system, which means EPA will not know your identity, e-mail address, or other contact information unless you provide it in the body of your comment.

iii. *Disk or CD ROM.* You may submit comments on a disk or CD ROM that you mail to the mailing address identified in the **ADDRESSES** section of this document. These electronic submissions will be accepted in WordPerfect, Word or ASCII file format. Avoid the use of special characters and any form of encryption.

2. *By Mail.* Written comments should be addressed to the EPA Regional office listed in the **ADDRESSES** section of this document.

For public commenters, it is important to note that EPA's policy is that public comments, whether submitted electronically or in paper, will be made available for public viewing at the EPA Regional Office, as EPA receives them and without change, unless the comment contains copyrighted material, confidential business information (CBI), or other information whose disclosure is restricted by statute. When EPA identifies a comment containing copyrighted material, EPA will provide a reference to that material in the version of the comment that is placed in the official public rulemaking file. The entire printed comment, including the copyrighted material, will be available at the Regional Office for public inspection.

Submittal of CBI Comments

Do not submit information that you consider to be CBI electronically to EPA. You may claim information that you submit to EPA as CBI by marking any part or all of that information as CBI (if you submit CBI on disk or CD ROM, mark the outside of the disk or CD ROM as CBI and then identify electronically within the disk or CD ROM the specific information that is CBI). Information so marked will not be disclosed except in accordance with procedures set forth in 40 CFR Part 2.

In addition to one complete version of the comment that includes any information claimed as CBI, a copy of the comment that does not contain the information claimed as CBI must be submitted for inclusion in the official public regional rulemaking file. If you submit the copy that does not contain CBI on disk or CD ROM, mark the outside of the disk or CD ROM clearly that it does not contain CBI. Information not marked as CBI will be included in the public file and available for public inspection without prior notice. If you have any questions about CBI or the procedures for claiming CBI, please consult the person identified in the **FOR FURTHER INFORMATION CONTACT** section.

Considerations When Preparing Comments to EPA

You may find the following suggestions helpful for preparing your comments:

1. Explain your views as clearly as possible.

2. Describe any assumptions that you used.

3. Provide any technical information and/or data you used that support your views.

4. If you estimate potential burden or costs, explain how you arrived at your estimate.

5. Provide specific examples to illustrate your concerns.

6. Offer alternatives.

7. Make sure to submit your comments by the comment period deadline identified.

8. To ensure proper receipt by EPA, identify the appropriate regional file/rulemaking identification number in the subject line on the first page of your response. It would also be helpful if you provided the name, date, and **Federal Register** citation related to your comments.

Please note that if EPA receives adverse comment on an amendment, paragraph, or section of this rule and if that provision may be severed from the remainder of the rule, EPA may adopt as final those provisions of the rule that are not the subject of an adverse comment.

Dated: September 29, 2003.

James W. Newsom,

Acting Regional Administrator, Region III.

[FR Doc. 03–25635 Filed 10–9–03; 8:45 am]

BILLING CODE 6560–50–P

ENVIRONMENTAL PROTECTION AGENCY

40 CFR Part 62

[NV–AM–NMI–103–NEGDECb; FRL–7572–6]

Approval and Promulgation of State Air Quality Plans for Designated Facilities and Pollutants; Control of Emissions From Existing Hospital/Medical/Infectious Waste Incinerator Units; Control of Emissions From Existing Large Municipal Waste Combustors; Nevada; American Samoa; Northern Mariana Islands

AGENCY: Environmental Protection Agency (EPA).

ACTION: Proposed rule.

SUMMARY: EPA is proposing to approve the negative declarations submitted by air pollution control agencies in Nevada, American Samoa, and Northern Mariana Islands. Each negative declaration certifies that certain combustion units, which are subject to the requirements of sections 111(d) and 129 of the Clean Air Act, do not exist within the relevant agency's air pollution control jurisdiction.

DATES: Comments must be received in writing by November 10, 2003.

ADDRESSES: Mail comments to Andrew Steckel, Rulemaking Office Chief (AIR–4), U.S. Environmental Protection Agency, Region IX, 75 Hawthorne Street, San Francisco, CA 94105–3901, or e-mail to *steckel.andrew@epa.gov*, or submit comments at *http://www.regulations.gov.*

FOR FURTHER INFORMATION CONTACT: Mae Wang, EPA Region IX, (415) 947–4124, *wang.mae@epa.gov.*

SUPPLEMENTARY INFORMATION: This proposal addresses Clean Air Act section 111(d)/129 negative declarations submitted by air pollution control agencies in Nevada, American Samoa, and Northern Mariana Islands certifying that certain types of combustion units do not exist within their air pollution control jurisdictions. For further information, please see the information provided in the direct final action, with the same title, that is located in the ''Rules and Regulations'' section of this **Federal Register** publication. If no adverse comments are received in response to this action, no further activity will be contemplated. If EPA receives adverse comments, the direct final rule will be withdrawn and all public comments received will be addressed in a subsequent final rule based on this proposed rule. EPA will not institute a second comment period. Any parties interested in commenting on this action should do so at this time. Please note that if EPA receives adverse comment on an amendment, paragraph, or section of this rule and if that provision may be severed from the remainder of the rule, EPA may adopt as final those provisions of the rule that are not the subject of an adverse comment.

Dated: September 25, 2003.

Deborah Jordan,

Acting Regional Administrator, Region IX.

[FR Doc. 03–25803 Filed 10–9–03; 8:45 am]

BILLING CODE 6560–50–P

Notices

Federal Register

Vol. 68, No. 197

Friday, October 10, 2003

This section of the FEDERAL REGISTER contains documents other than rules or proposed rules that are applicable to the public. Notices of hearings and investigations, committee meetings, agency decisions and rulings, delegations of authority, filing of petitions and applications and agency statements of organization and functions are examples of documents appearing in this section.

DEPARTMENT OF AGRICULTURE

Agricultural Marketing Service

[Doc. No. PY–03–004]

Notice of Request for Extension of and Revision to a Currently Approved Information Collection

AGENCY: Agricultural Marketing Service, USDA.

ACTION: Notice and request for comments.

SUMMARY: In accordance with the Paperwork Reduction Act of 1995 (44 U.S.C. Chapter 35), this notice announces the Agricultural Marketing Service's (AMS) intention to request approval from the Office of Management and Budget (OMB), for an extension for and revision to a currently approved information collection for Poultry Market News Programs.

DATES: Comments received by December 9, 2003 will be considered.

ADDITIONAL INFORMATION OR COMMENTS: Interested parties are invited to submit written comments concerning this notice. Comments must be sent to Michael E. Sheats, Chief, Poultry Market News Branch, Poultry Programs, Agricultural Marketing Service, U.S. Department of Agriculture, STOP 0262, 1400 Independence Avenue, SW., Washington, DC 20250–0262, or fax (202–720–2403), or e-mail *Michael.Sheats@usda.gov.* Comments should make reference to the date and page number of this issue of the **Federal Register** and will be made available for public inspection in the above office during regular business hours.

FOR FURTHER INFORMATION CONTACT: Michael E. Sheats, Chief, Poultry Market News Branch, 202–720–6911.

SUPPLEMENTARY INFORMATION

Paperwork Reduction Act

This notice contains submission requirements subject to public comment and review by the Office of Management and Budget (OMB) under the Paperwork Reduction Act of 1995 (PRA) (44 U.S.C. Chapter 35). In accordance with 5 CFR Part 1320, a description of the submission requirements and an estimate of the resulting burden on applicants is included.

Title: Poultry Market News Reports.

OMB Number: 0581–0033.

Expiration Date of Approval: June 30, 2004.

Type of Request: Extension of and revision to a currently approved information collection.

Abstract: Under the Agricultural Marketing Act of 1946, as amended (7 U.S.C. 1621 *et seq.*), the Poultry Market News Branch provides up-to-the-minute nationwide coverage of prices, supply, demand, trends, movement, and other pertinent information affecting the trading of poultry and eggs, and their respective products. The market reports compiled and disseminated by Market News provide current, unbiased, factual information to all members of the Nation's agricultural industry, from farm to retailer. These market reports assist producers, processors, wholesalers, retailers, and others in making informed production, purchasing, and sales decisions and promote orderly marketing by placing buyers and sellers on a more equal negotiating basis.

Market news reporters communicate with buyers and sellers of egg and poultry commodities on a daily basis in order to accomplish the Program's mission. This communication and information gathering is accomplished through the use of telephone conversations, facsimile transmissions, and electronic mail messages. Market News uses one OMB approved form, PY–90: Monthly Dried Egg Solids Stocks Report, to collect inventory information monthly from commercial dried egg products plants throughout the U.S. Cooperating firms submit this form to Market News primarily via facsimile transmissions.

AMS is committed to implementation of the Government Paperwork Elimination Act, which provides for the use of information resources to improve the efficiency and effectiveness of governmental operations, including providing the public with the option of submitting information or transacting business electronically to the extent possible.

(1) Collection of Market Information.

Estimate of Burden: Public reporting burden for this collection of information is estimated to average 0.083 hours per response.

Respondents: Producers, processors, brokers, distributors, and retailers.

Estimated Number of Respondents: 1,700.

Estimated Number of Responses: 212,500.

Estimated Number of Responses per Respondent: 125.

Estimated Total Annual Burden on Respondents: 17,637.5 hours.

(2) Monthly Dried Egg Solids Stocks Form PY–90.

Estimate of Burden: Public reporting burden for this collection of information is estimated to average 0.083 hours per response.

Respondents: Commercial domestic dried egg products plants.

Estimated Number of Respondents: 10.

Estimated Number of Responses: 120.

Estimated Number of Responses per Respondent: 12.

Estimated Total Annual Burden on Respondents: 10 hours.

Comments are invited on: (1) Whether the proposed collection of the information is necessary for the proper performance of the functions of the agency, including whether the information will have practical utility; (2) the accuracy of the Agency's estimate of the burden of the proposed collection of information including the validity of the methodology and assumptions used; (3) ways to enhance the quality, utility and clarity of the information to be collected; and (4) ways to minimize the burden of the collection of information on those who are to respond, including the use of appropriate automated, electronic, mechanical, or other technological collection techniques or other forms of information technology.

Comments should reference OMB No. 0581–0033 and be sent to Michael E. Sheats, Chief, Poultry Market News Branch, Poultry Programs, Agricultural Marketing Service, U.S. Department of Agriculture, STOP 0262, 1400 Independence Avenue, SW., Washington, DC 20250–0262, or fax (202–720–2403), or e-mail *Michael.Sheats@usda.gov.* All comments will be available for public inspection in the above office during regular business hours.

All responses to this notice will be summarized and included in the request for OMB approval. All comments will become a matter of public record.

Dated: October 6, 2003.

A.J. Yates,

Administrator, Agricultural Marketing Service.

[FR Doc. 03–25673 Filed 10–9–03; 8:45 am]

BILLING CODE 3410–02–P

DEPARTMENT OF AGRICULTURE

Agricultural Research Service

Notice of Federal Invention Available for Licensing and Intent To Grant Exclusive License

AGENCY: Agricultural Research Service, USDA.

ACTION: Notice of availability and intent.

SUMMARY: Notice is hereby given that the Federally owned invention disclosed in U.S. Patent No. 5,459,044, ''High affinity monoclonal antibodies to Bowman-Birk inhibitor and immunoassay methods'', issued on October 17, 1995, is available for licensing and that the U.S. Department of Agriculture, Agricultural Research Service, intends to grant to Agdia Incorporated of Elkhart, Indiana, an exclusive license to this invention.

DATES: Comments must be received on or before January 8, 2004.

ADDRESSES: Send comments to: USDA, ARS, Office of Technology Transfer, 5601 Sunnyside Avenue, Room 4–1174, Beltsville, Maryland 20705–5131.

FOR FURTHER INFORMATION CONTACT: June Blalock of the Office of Technology Transfer at the Beltsville address given above; telephone: 301–504–5989.

SUPPLEMENTARY INFORMATION: The Federal Government's patent rights to this invention are assigned to the United States of America, as represented by the Secretary of Agriculture. It is in the public interest to so license this invention as Agdia Incorporated of Elkhart, Indiana has submitted a complete and sufficient application for a license. The prospective exclusive license will be royalty-bearing and will comply with the terms and conditions of 35 U.S.C. 209 and 37 CFR 404.7. The prospective exclusive license may be granted unless, within ninety (90) days from the date of this published Notice, the Agricultural Research Service receives written evidence and argument which establishes that the grant of the license would not be consistent with the requirements of 35 U.S.C. 209 and 37 CFR 404.7.

Michael D. Ruff,

Assistant Administrator.

[FR Doc. 03–25791 Filed 10–9–03; 8:45 am]

BILLING CODE 3410–03–P

DEPARTMENT OF AGRICULTURE

Agricultural Research Service

Notice of Federal Invention Available for Licensing and Intent To Grant Exclusive License

AGENCY: Agricultural Research Service, USDA.

ACTION: Notice of availability and intent.

SUMMARY: Notice is hereby given that the invention disclosed in U.S. Patent No. 6,184,246, ''Inhibition of Cytokine Production by Polymethoxylated Flavones,'' issued on February 6, 2001, is available for licensing and that the U.S. Department of Agriculture, Agricultural Research Service, intends to grant to Next Pharmaceuticals, Inc. of Irvine, California, an exclusive license to the Federal Government's current patent rights and any patent rights that it subsequently may acquire in this joint invention.

DATES: Comments must be received on or before January 8, 2004.

ADDRESSES: Send comments to: USDA, ARS, Office of Technology Transfer, 5601 Sunnyside Avenue, Room 4–1174, Beltsville, Maryland 20705–5131.

FOR FURTHER INFORMATION CONTACT: June Blalock of the Office of Technology Transfer at the Beltsville address given above; telephone: 301–504–5989.

SUPPLEMENTARY INFORMATION: The Federal Government's patent rights in this joint invention are assigned to the United States of America, as represented by the Secretary of Agriculture. It is in the public interest to so license this invention as Next Pharmaceuticals, Inc. has submitted a complete and sufficient application for a license. The prospective exclusive license will be royalty-bearing and will comply with the terms and conditions of 35 U.S.C. 209 and 37 CFR 404.7. The prospective exclusive license may be granted unless, within ninety (90) days from the date of this published Notice, the Agricultural Research Service receives written evidence and argument which establishes that the grant of the license would not be consistent with the requirements of 35 U.S.C. 209 and 37 CFR 404.7.

Michael D. Ruff,

Assistant Administrator.

[FR Doc. 03–25789 Filed 10–9–03; 8:45 am]

BILLING CODE 3410–03–P

DEPARTMENT OF AGRICULTURE

Agricultural Research Service

Notice of Federal Invention Available for Licensing and Intent To Grant Exclusive License

AGENCY: Agricultural Research Service, USDA.

ACTION: Notice of availability and intent.

SUMMARY: Notice is hereby given that the Federally owned invention disclosed in U.S. Patent Application No. 10/146,616 ''Bio-Based Method for Making Mannitol'', filed May 15, 2002, is available for licensing and that the U.S. Department of Agriculture, Agricultural Research Service, intends to grant to zuChem, Inc. of Chicago, Illinois, an exclusive license to this invention.

DATES: Comments must be received on or before January 8, 2004.

ADDRESSES: Send comments to: USDA, ARS, Office of Technology Transfer, 5601 Sunnyside Avenue, Room 4–1174, Beltsville, Maryland 20705–5131.

FOR FURTHER INFORMATION CONTACT: June Blalock of the Office of Technology Transfer at the Beltsville address given above; telephone: 301–504–5989.

SUPPLEMENTARY INFORMATION: The Federal Government's patent rights to this invention are assigned to the United States of America, as represented by the Secretary of Agriculture. It is in the public interest to so license this invention as zuChem, Inc. of Chicago, Illinois has submitted a complete and sufficient application for a license. The prospective exclusive license will be royalty-bearing and will comply with the terms and conditions of 35 U.S.C. 209 and 37 CFR 404.7. The prospective exclusive license may be granted unless, within ninety (90) days from the date of this published Notice, the Agricultural Research Service receives written evidence and argument which establishes that the grant of the license would not be consistent with the requirements of 35 U.S.C. 209 and 37 CFR 404.7.

Michael D. Ruff,

Assistant Administrator.

[FR Doc. 03–25790 Filed 10–9–03; 8:45 am]

BILLING CODE 3410–03–P

DEPARTMENT OF AGRICULTURE

Forest Service

Lost Cabin Mine, Medicine Bow-Routt National Forests, Carbon County, WY

AGENCY Forest Service, USDA.

ACTION: Revised Notice of Intent to prepare an Environmental Impact Statement.

SUMMARY: The Forest Service will prepare an Environmental Impact Statement (EIS) to assess and disclose the environmental effects of a Plan of Operations, submitted by Broken Arrow Mining, LLC, to conduct mineral exploration at the Lost Cabin Mine. The Lost Cabin Mine is located in Sections 1 and 12 of T. 14N., R. 86 W., 6th Principle Meridian, Carbon County, Wyoming. Approval of the Plan of Operations would allow the claimants to use National Forest System Roads (NFSR) 439, 431, and 431.A while conducting mineral exploration. In addition, they would be allowed to clear deadfall from and use roughly 0.4 miles of NFSR 4172. Finally, they would be allowed to improve and use 1.6 miles of an historic mining road (Way [1] 4170H) that accesses the mine site. Improvements would include individual tree removal in isolated locations to improve maneuverability and sight distance and the installation of drainage structures to reduce erosion and sedimentation. The historic road falls within the Mowry Peak Inventoried Roadless Area (IRA) boundary. All roads and ways are currently closed to motorized vehicle use.

The EIS will comply with the requirements of the National Environmental Policy Act (42 U.S.C. sections 4321–4370a), the National Forest Management Act (16 U.S.C. 1600–1614), and the U.S. Mining Laws (30 U.S.C. 21–54), as amended.

DATES: An original Notice of Intent for this proposal was published in the **Federal Register** on March 20, 2002. Comments concerning the proposal and the scope of the analysis were requested to be received in writing by April 21, 2002. The Forest Service expects to file a Draft EIS with the Environmental Protection Agency (EPA) and make it available for public comment in October 2003. The agency expects to file the Final EIS in February 2004.

ADDRESSES: Send written comments to Mary Peterson, Medicine Bow-Routt National Forests Supervisor's Office, 2468 Jackson Street, Wyoming 82070.

FOR FURTHER INFORMATION CONTACT: Tom Florich, Recreation and Lands Program Manager, Medicine Bow-Routt National Forests, 2468 Jackson Street, Laramie, Wyoming, 82070 Telephone: (307) 745–2435.

Responsible Official: Mary H. Peterson, Medicine Bow-Routt National Forests Supervisor, 2468 Jackson Street, Laramie, Wyoming, 82070.

SUPPLEMENTARY INFORMATION: This is a revised Notice of Intent for the prior notice promulgated in the Federal Register, Vol. 67, No. 54, pp. 12958–12959, on March 20, 2002. The scope of the project has not changed; therefore, this revised Notice of Intent does not initiate a second scoping period for this proposal. The Notice of Intent is being revised for the following reasons:

(1) The Draft EIS has been delayed more than one year. The original expected release date was July 2002; the new expected date is October 2003 with the Final EIS to be released in February 2004; and

(2) The Responsible Official has changed. Rick D. Cables was identified as the Responsible Official in the March 20, 2002 Notice of Intent because of Inventoried Roadless Area issues associated with the project proposal. Since that time, rules and regulations affecting Inventoried Roadless Areas have changed, and the signing authority for decisions of this nature has been delegated to Forest Supervisors. Therefore, the Responsible Official for this proposal is now Mary H. Peterson, Forest Supervisor of the Medicine Bow-Routt National Forests.

Estimated Dates for Filing

The Draft EIS is expected to be filed with the Environmental Protection Agency (EPA) and available for public review during October 2003. At that time, the EPA will publish a Notice of Availability (NOA) of the Draft EIS in the **Federal Register**. The comment period on the Draft EIS will be for a period of not less than 45 days from the date the EPA publishes the NOA in the **Federal Register**. It is important that those interested in the management of this area comment at that time. The Final EIS is expected to be available in February 2004.

Release of Names

Comments received in response to this Notice of Intent, including names and addresses of those who comment, will be considered part of the public record on this Proposed Action and will be available for public inspection. Comments submitted anonymously will be accepted and considered; however, those who submit anonymous comments will not have standing to appeal the subsequent decision under 36 CFR parts 215 or 217. Additionally, pursuant to 7 CFR 1.27(d), any person may request the agency to withhold a submission from the public record by showing how the Freedom of Information Act (FOIA) permits such confidentiality. Persons requesting such confidentiality should be aware that, under the FOIA, confidentiality may be granted in only very limited circumstances, such as to protect trade secrets. The Forest Service will inform the requester of the agency's decision regarding the request for confidentiality, and where the request is denied, the agency will return the submission and notify the requester that the comments may be resubmitted with or without name and address within ten (10) days.

The Public Obligation To Comment

The Forest Service believes it is important to give reviewers an early notice of several court rulings related to public participation in the environmental review process. First, reviewers of Draft EIS's must structure their participation in the environmental review of the proposal so that it is meaningful and alerts an agency to the reviewer's position and contentions. *Vermont Yankee Nuclear Power Corp.* v. *NRDC,* 435 U.S. 519, 553 (1978). Also, environmental objections that could be raised during the Draft EIS state, but are not raised until after completion of the final EIS, may be waived or dismissed by the courts. *City of Angoon* v. *Hodel,* 803 F.3d 1016, 1022 (9th Cir. 1986) and *Wisconsin Heritages, Inc.* v. *Harris,* 490 F. Supp. 1334, 1338 (E.D. Wis. 1980). As a result of these previous court rulings, it is very important that those interested in this proposed action participate by the close of the 45-day comment period so that substantive comments and objections are made available to the Forest Service at a time when it can meaningfully consider them and respond to them in the Final EIS.

To assist the Forest Service in identifying and considering issues and concerns related to the proposed action, comments on the Draft EIS should be as specific as possible. It is also helpful if comments refer to specific pages or chapters of the draft document. Comments may also address the adequacy of the Draft EIS or the merits of the alternatives displayed in the document. Reviewers should refer to the Council on Environmental Quality Regulations at 40 CFR 1503.3 for implementing the procedural provisions of the National Environmental Policy Act for addressing these points. Please note that any comments that are

[1] Ways are routes not currently shown as part of the Forest Transportation System.

submitted in relation to this Draft EIS will be considered public information.

After the comment period on the Draft EIS ends, comments will be analyzed, considered, and responded to by the Forest Service when preparing the Final EIS. As previously mentioned, the Final EIS is scheduled to be completed in February 2004. The Responsible Official will consider the comments, responses, environmental consequences discussed in the Final EIS, and applicable laws, regulations, and policies in making decisions regarding the Plan of Operations. The responsible official will document her decision and the reasons for the decision in a Record of Decision for the Lost Cabin Mine Final EIS. This decision will be subject to appeal in accordance with 36 CFR part 2157.

Dated: October 3, 2003.

Mary H. Peterson,

Forest Supervisor.

[FR Doc. 03–25675 Filed 10–9–03; 8:45 am]

BILLING CODE 3410–GM–M

COMMITTEE FOR PURCHASE FROM PEOPLE WHO ARE BLIND OR SEVERELY DISABLED

Procurement List Additions

AGENCY: Committee for Purchase From People Who Are Blind or Severely Disabled.

ACTION: Additions to Procurement List.

SUMMARY: This action adds to the Procurement List products and a service to be furnished by nonprofit agencies employing persons who are blind or have other severe disabilities.

EFFECTIVE DATE: November 9, 2003.

ADDRESSES: Committee for Purchase From People Who Are Blind or Severely Disabled, Jefferson Plaza 2, Suite 10800, 1421 Jefferson Davis Highway, Arlington, Virginia 22202–3259.

FOR FURTHER INFORMATION CONTACT: Sheryl D. Kennerly, (703) 603–7740.

SUPPLEMENTARY INFORMATION: On January 24 and August 8, 2003, the Committee for Purchase From People Who Are Blind or Severely Disabled published notice (68 FR 3508, and 47292) of proposed additions to the Procurement List.

After consideration of the material presented to it concerning capability of qualified nonprofit agencies to provide the products and service and impact of the additions on the current or most recent contractors, the Committee has determined that the products and service listed below are suitable for procurement by the Federal Government under 41 U.S.C. 46–48c and 41 CFR 51–2.4.

Regulatory Flexibility Act Certification

I certify that the following action will not have a significant impact on a substantial number of small entities. The major factors considered for this certification were:

1. The action will not result in any additional reporting, recordkeeping or other compliance requirements for small entities other than the small organizations that will furnish the products and service to the Government.

2. The action will result in authorizing small entities to furnish the products and service to the Government.

3. There are no known regulatory alternatives which would accomplish the objectives of the Javits-Wagner-O'Day Act (41 U.S.C. 46–48c) in connection with the products and service proposed for addition to the Procurement List.

End of Certification

Accordingly, the following products and service are added to the Procurement List:

Products

Product/NSN: CD Cases, Slim
7045–00–NIB–0179—Clear
7045–00–NIB–0180—Color
NPA: Wiscraft Inc.—Wisconsin Enterprises for the Blind, Milwaukee, Wisconsin
Contract Activity: Office Supplies & Paper Products Acquisition Center, New York, New York

Product/NSN: Full Spectrum Battle Equipment (FSBE)
Basic Shooter's Kit/8415–00–NSH–0691
Platoon Kit A/8415–00–NSH–0692
Platoon Kit B/8415–00–NSH–0768
Basic Shooter's Kit B/8415–00–NSH–0769
Platoon Kit C/8415–00–NSH–0770
Basic Shooter's Kit C/8415–00–NSH–0771
NPA: Chautauqua County Chapter, NYSARC, Jamestown, New York
Contract Activity: U.S. Army Robert Morris Acquisition Center, Natick, Massachusetts

Product/NSN: Skilcraft Toner Cartridge
7510–00–NIB–0633 (New—compatible with HP Part No. 92298A)
7510–00–NIB–0641 (New—compatible with HP Part No. C3903A)
7510–00–NIB–0642 (New—compatible with HP Part No. C3906A)
7510–00–NIB–0644 (New—compatible with HP Part No. C4092A)
NPA: Alabama Industries for the Blind, Talladega, Alabama
Contract Activity: Office Supplies & Paper Products Acquisition Center, New York, New York

Service

Service Type/Location: Janitorial/Grounds Maintenance
INS—Sector Headquarters
221 Aten Road, Imperial, California
NPA: Association for Retarded Citizens—Imperial Valley, El Centro, California
Contract Activity: Department of Homeland Security, Laguna Niguel, California
This action does not affect current contracts awarded prior to the effective date of this addition or options that may be exercised under those contracts.

Sheryl D. Kennerly,

Director, Information Management.

[FR Doc. 03–25796 Filed 10–9–03; 8:45 am]

BILLING CODE 6353–01–P

COMMITTEE FOR PURCHASE FROM PEOPLE WHO ARE BLIND OR SEVERELY DISABLED

Procurement List; Proposed Additions and Deletions

AGENCY: Committee for Purchase From People Who Are Blind or Severely Disabled.

ACTION: Proposed additions to and deletions from Procurement List.

SUMMARY: The Committee is proposing to add to the procurement list products and services to be furnished by nonprofit agencies employing persons who are blind or have other severe disabilities, and to delete products previously furnished by such agencies.

Comments Must be Received on or Before: November 9, 2003.

ADDRESSES: Committee for Purchase From People Who Are Blind or Severely Disabled, Jefferson Plaza 2, Suite 10800, 1421 Jefferson Davis Highway, Arlington, Virginia 22202–3259.

FOR FURTHER INFORMATION CONTACT: Sheryl D. Kennerly, (703) 603–7740.

SUPPLEMENTARY INFORMATION: This notice is published pursuant to 41 U.S.C 47(a)(2) and 41 CFR 51–2.3. Its purpose is to provide interested persons an opportunity to submit comments on the proposed actions.

Additions

If the Committee approves the proposed additions, the entities of the Federal Government identified in this notice for each product or service will be required to procure the products and services listed below from nonprofit agencies employing persons who are blind or have other severe disabilities.

Regulatory Flexibility Act Certification

I certify that the following action will not have a significant impact on a substantial number of small entities. The major factors considered for this certification were:

1. If approved, the action will not result in any additional reporting, recordkeeping or other compliance

requirements for small entities other than the small organizations that will furnish the products and services to the Government.

2. If approved, the action will result in authorizing small entities to furnish the products and services to the Government.

3. There are no known regulatory alternatives which would accomplish the objectives of the Javits-Wagner-O'Day Act (41 U.S.C. 46–48c) in connection with the products and services proposed for addition to the Procurement List. Comments on this certification are invited. Commenters should identify the statement(s) underlying the certification on which they are providing additional information.

End of Certification

The following products and services are proposed for addition to Procurement List for production by the nonprofit agencies listed:

Products

Product/NSN: Fluorescent Highlighter M.R. 1776
Product/NSN: Permanent Marker M.R. 1780
NPA: Dallas Lighthouse for the Blind, Inc., Dallas, Texas
Contract Activity: Defense Commissary Agency, Fort Lee, Virginia
Product/NSN: Polyethylene Waste Disposable Asbestos Bag
8105–LL–S04–7842
8105–LL–S04–7843
8105–LL–S05–0018
NPA: Open Door Center, Valley City, North Dakota
Contract Activity: Fleet and Industrial Supply Center, Bremerton, Washington
Product/NSN: Shovel, Forest Fire 5120–00–965–0609
NPA: Mississippi Industries for the Blind, Jackson, Mississippi
Contract Activity: GSA, Southwest Supply Center, Fort Worth, Texas
Product/NSN: Tree Marking Paint, Water Resistant
8010–01–511–5057—2400–401 Type D Orange (16 oz. Aerosol)
8010–01–511–5059—2400–401 Type D Yellow (16 oz. Aerosol)
8010–01–511–5061—2400–401 Type D Green (16 oz. Aerosol)
8010–01–511–5063—2400–401 Type D Black (16 oz. Aerosol)
8010–01–511–5066—2400–401 Type D White (16 oz. Aerosol)
8010–01–511–5067—2400–401 Type D Blue (16 oz. Aerosol)
8010–01–511–5095—2400–401 Type C Orange (Quart)
8010–01–511–5097—2400–401 Type C Orange (Gallon)
8010–01–511–5098—2400–401 Type C Yellow (Quart)
8010–01–511–5100—2400–401 Type C Yellow (Gallon)
8010–01–511–5101—2400–401 Type C Green (Gallon)
8010–01–511–5102—2400–401 Type C Green (Quart)
8010–01–511–5103—2400–401 Type C Blue (Quart)
8010–01–511–5104—2400–401 Type C Blue (Gallon)
8010–01–511–5105—2400–401 Type C White (Quart)
8010–01–511–5107—2400–401 Type C White (Gallon)
8010–01–511–5108—2400–401 Type C Black (Quart)
8010–01–511–5109—2400–401 Type C Black (Gallon)
NPA: Lighthouse for the Blind, St. Louis, Missouri
Contract Activity: GSA, Hardware & Appliances Center, Kansas City, Missouri

Services

Service Type/Location: Administrative Services
Federal Protective Service, Southern Field Operation Branch Los Angeles, California
NPA: Pacific Coast Community Services, Truckee, California
Contract Activity: GSA Region 9 PMS, San Francisco, California
Service Type/Location: Custodial Services
U.S. Courthouse (Federal Building), Charlottesville, Virginia
NPA: WorkSource Enterprises, Charlottesville, Virginia
Contract Activity: GSA, Public Buildings Service, Region 3 (3PMT), Philadelphia, Pennsylvania
Service Type/Location: Custodial Services
U.S. Mint, West Point, New York
NPA: New Dynamics Corporation, Middletown, New York
Contract Activity: Department of the Treasury, Washington, DC
Service Type/Location: Grounds Maintenance
Newport Research Facilities, Newport, New York
NPA: Herkimer County Chapter, NYSARC, Herkimer, New York
Contract Activity: Air Force Research Laboratory/IFKO, Rome, New York
Service Type/Location: Janitorial/Custodial
Finger Lakes National Forest—Hector District Ranger Office Hector, New York
NPA: Schuyler County Chapter, NYSARC, Inc., Watkins Glen, New York
Contract Activity: USDA, Forest Service, Rutland, Vermont
Service Type/Location: Prepare Reports of Investigation
Prepare Final Agency Decision
Department of Transportation, Departmental Office of Civil Rights Washington, DC
NPA: Federal Dispute Resolution Center, Alexandria, Virginia
Contract Activity: Department of Transportation, Washington, DC
Service Type/Location: Switchboard Operation
Greater Los Angeles Health Care System, Los Angeles, California
At the following locations:
Los Angeles Ambulatory Care Center
Sepulveda Ambulatory Care Center
VA Medical Center, West Los Angeles
NPA: Lighthouse for the Blind of Houston, Houston, Texas
Contract Activity: VA Network Business Center, Long Beach, California
Service Type/Location: Switchboard Operation
Veterans Affairs Medical Center, Salem, Virginia
NPA: Virginia Industries for the Blind, Charlottesville, Virginia
Contract Activity: VA Medical Center, Hampton, Virginia

Deletions

Regulatory Flexibility Act Certification

I certify that the following action will not have a significant impact on a substantial number of small entities. The major factors considered for this certification were:

1. If approved, the action will not result in any additional reporting, recordkeeping or other compliance requirements for small entities.

2. If approved, the action will result in authorizing small entities to furnish the products to the Government.

3. There are no known regulatory alternatives which would accomplish the objectives of the Javits-Wagner-O'Day Act (41 U.S.C. 46–48c) in connection with the products proposed for deletion from the Procurement List.

End of Certification

The following products are proposed for deletion from the Procurement List:

Products

Product/NSN: Computer Accessories 7045–01–483–7451
7045–01–483–7844
NPA: Wiscraft Inc.—Wisconsin Enterprises for the Blind, Milwaukee, Wisconsin
Contract Activity: Office Supplies & Paper Products Acquisition Center, New York, New York
Product/NSN: Dropcloth, Heavy Duty 8340–00–NIB–0010
NPA: East Texas Lighthouse for the Blind, Tyler, Texas
Contract Activity: GSA, Southwest Supply Center, Fort Worth, Texas
Product/NSN: Fixture, Lighting Industrial 6210–00–688–4929
NPA: The Chicago Lighthouse for People who are Blind or Visually Impaired, Chicago, Illinois
Contract Activity: GSA, Southwest Supply Center, Fort Worth, Texas
Product/NSN: Pad, Scouring 7920–01–383–7928
NPA: Beacon Lighthouse, Inc., Wichita Falls, Texas
Contract Activity: GSA, Southwest Supply Center, Fort Worth, Texas
Product/NSN: Tape, Electronic Data
7045–01–438–7086
7045–01–123–0367
NPA: North Central Sight Services, Inc., Williamsport, Pennsylvania

Contract Activity: Defense Supply Center Columbus, Columbus, Ohio
Product/NSN: Towel, Paper 8540–01–494–0910
NPA: The Lighthouse f/t Blind in New Orleans, New Orleans, Louisiana
Contract Activity: Office Supplies & Paper Products Acquisition Center, New York, New York

Sheryl D. Kennerly,

Director, Information Management.

[FR Doc. 03–25797 Filed 10–9–03; 8:45 am]

BILLING CODE 6353–01–P

COMMISSION ON CIVIL RIGHTS

Sunshine Act Notice

AGENCY: U.S. Commission on Civil Rights.

DATE AND TIME: Friday, October 17, 2003, 8:30 a.m.

PLACE: Double Tree Hotel, 201 Marquette Avenue, NW., Albuquerque, NM 87102.

STATUS:

Agenda

I. Approval of Agenda.
II. Approval of Minutes of September 12, 2003 Meeting.
III. Announcements.
IV. Staff Director's Report.
V. State Advisory Committee Report: ''Racial Harassment in Vermont Public Schools: A Progress Report''.
VI. ''Not in My Backyard: Executive Order 12898 and Title VI as Tools for Achieving Environmental Justice'' Report.
VII. Future Agenda Items.

9:30 a.m. Briefing on Native American Health Care.

FOR FURTHER INFORMATION CONTACT: Les Jin, Press and Communications (202) 376–7700.

Debra A. Carr,

Deputy General Counsel.

[FR Doc. 03–25966 Filed 10–8–03; 3:15 pm]

BILLING CODE 6335–01–M

DEPARTMENT OF COMMERCE

Foreign-Trade Zones Board

[Docket 53–2003]

Foreign-Trade Zone 200—Mercer County, NJ, Area; Application for Expansion

An application has been submitted to the Foreign-Trade Zones (FTZ) Board (the Board) by Mercer County, New Jersey, grantee of FTZ 200, requesting authority to expand its zone to include sites in the municipalities of Ewing Township, the City of Trenton, Washington Township, East Windsor Township and Hamilton Township, within the Consolidated Port of the Delaware River and Bay Customs port of entry. The application was submitted pursuant to the provisions of the Foreign-Trade Zones Act, as amended (19 U.S.C. 81a–81u), and the regulations of the Board (15 CFR Part 400). It was formally filed on October 3, 2003.

FTZ 200 was approved on March 11, 1994 (Board Order 683, 59 F.R. 13698, 3/23/94) and consists of one site covering 70 acres on 5 parcels within the 450-acre Mercer County Airport complex on Scotch Road, West Trenton.

The applicant is now requesting authority to expand its general-purpose zone to include five new sites within five Mercer County municipalities: *Proposed Site 2* (18 acres)—Municipality of Ewing along the Lower Ferry Road Business Area at 1425/1445 Lower Ferry Road and 7 Graphics Drive; *Proposed Site 3a* (85 acres)—Marine Terminal Industrial Park, located between 1463–2785 Lambert Street, Trenton; *Proposed Site 3b* (20 acres)—Roebling Market (Park), extending along Clinton Avenue and between South Broad Street, Clark Street and Conovers Alley, Trenton; and *Proposed Site 3c* (24 acres)—Hill Industrial Park, between Pennington Avenue, Ingham Avenue, Chelton Avenue and Globe Street, Trenton; *Proposed Site 4a* (883 acres)—Northwest Business Park, between the intersection of Interstate 195 and the New Jersey Turnpike exit 7A, Municipality of Washington; *Proposed Site 4b* (243 acres)—Windsor Industrial Park, between 92–120 North Main Street and Hankins Road, Municipality of Washington; and, *Proposed Site 4c* (33 acres)—North Gold Industrial Park, along North Gold Drive, Municipality of Washington; *Proposed Site 5* (361 acres)—New Jersey Turnpike Exit 8—Route 33 Corridor, Municipality of East Windsor; and, *Proposed Site 6a* (629 acres)—East State Street Corridor, the Industrial Drive Business Area and the Fairgrounds Industrial Park Area, along Industrial Drive and between E. State Street, Sloan Avenue, Whitehead Road and Nottingham Way, Municipality of Hamilton; and *Proposed Site 6b* (562 acres)—Crossroads Corporate Center on Crossroads Drive, Edgerbrook Business Park on Black Forest Road, Kuser Road Business Development Area on Kuser Road, Hamilton Business Park between Gold Drive and Marlen Drive, the Interstate 95 Business Park on Commerce Way, Matrix Industrial Park on Cabot Drive, and the Horizon Center between Horizon Center Boulevard and Horizon Drive, Municipality of Hamilton. No specific manufacturing requests are being made at this time. Such requests would be made to the Board on a case-by-case basis.

In accordance with the Board's regulations, a member of the FTZ Staff has been designated examiner to investigate the application and report to the Board.

Public comment on the application is invited from interested parties. Submissions (original and 3 copies) shall be addressed to the Board's Executive Secretary at one of the following addresses:

1. Submissions via Express/Package Delivery Services: Foreign-Trade Zones Board, U.S. Department of Commerce, Franklin Court Building-Suite 4100W, 1099—14th Street, NW, Washington, DC 20005; or

2. Submissions via the U.S. Postal Service: Foreign-Trade Zones Board, U.S. Department of Commerce, FCB-Suite 4100W, 1401 Constitution Avenue, NW, Washington, DC 20230.

The closing period for their receipt is December 9, 2003. Rebuttal comments in response to material submitted during the foregoing period may be submitted during the subsequent 15-day period (to December 24, 2003).

A copy of the application and accompanying exhibits will be available during this time for public inspection at address Number 1 listed above, and at the U.S. Department of Commerce, International Trade Administration, Export Assistance Center, 20 West State Street, Trenton, New Jersey 08625.

Dated: October 3, 2003.

Dennis Puccinelli,

Executive Secretary.

[FR Doc. 03–25776 Filed 10–9–03; 8:45 am]

BILLING CODE 3510–DS–P

DEPARTMENT OF COMMERCE

Foreign-Trade Zones Board

[Docket 52–2003]

Foreign-Trade Zone 7—Puerto Rico; Application for Expansion

An application has been submitted to the Foreign-Trade Zones (FTZ) Board (the Board) by the Puerto Rico Industrial Development Company (PRIDCO), a governmental instrumentality of the Commonwealth of Puerto Rico and grantee of Foreign-Trade Zone 7, requesting authority to expand its zone to include five additional sites in Puerto Rico. The application was submitted pursuant to the provisions of the Foreign-Trade Zones Act, as amended

(19 U.S.C. 81a–81u), and the regulations of the Board (15 CFR Part 400). It was formally filed on October 2, 2003.

FTZ 7 was approved on June 27, 1960 (Board Order 50, 25 FR 6311, 7/2/60) and expanded on June 28, 1968 (Board Order 76, 33 FR 10029, 7/12/68), November 16, 1972 (Board Order 91, 37 FR 24853, 11/22/72), and January 20, 1999 (Board Order 1020, 64 FR 5765, 2/5/99). The general-purpose zone currently consists of multiple sites which are part of PRIDCO's Industrial Park System.

The applicant is now requesting authority to expand the FTZ to include five additional sites which are not associated with PRIDCO's Industrial Park System. All of these sites are industrial-park or public-warehouse types of facilities that will be available for general-purpose activities to parties requiring FTZ procedures:

1—''Public Warehouse in Guaynabo,'' to include 1.54 acres located at Amelia Industrial Park, Diana Street, Lot # 27, Guaynabo;

2—''Distribution Warehouse Center in Cataño,'' to include 8.96 acres located on State Road 869 in Palmas Ward, Cataño;

3—''Distribution Center for the Caribbean in Cataño,'' to include 16.75 acres located at Kennedy Avenue Km. 3.2, Cataño;

4—''Distribution Center in San Juan/Río Piedras,'' to include 2.94 acres located at State Road # 1 Km. 26.9, Río Cañas Ward, Río Piedras; and

5—''Industrial Park in Toa Baja,'' to include 40.1 acres located at State Road # 865 Km. 4.9, Toa Baja.

In accordance with the Board's regulations, a member of the FTZ Staff has been designated examiner to investigate the application and report to the Board.

Public comment is invited from interested parties. Submissions (original and 3 copies) shall be addressed to the Board's Executive Secretary at one of the following addresses:

1. Submissions Via Express/Package Delivery Services: Foreign-Trade-Zones Board, U.S. Department of Commerce, Franklin CourtBuilding—Suite 4100W, 1099 14th St. NW., Washington, DC 20005; or

2. Submissions Via the U.S. Postal Service: Foreign-Trade-Zones Board, U.S. Department of Commerce, FCB—Suite 4100W, 1401 Constitution Ave. NW., Washington, DC 20230.

The closing period for their receipt is December 9, 2003. Rebuttal comments in response to material submitted during the foregoing period may be submitted during the subsequent 15-day period to December 24, 2003.

A copy of the application and accompanying exhibits will be available for public inspection at the Office of the Foreign-Trade Zones Board's Executive Secretary at address Number 1 listed above, and at the U.S. Department of Commerce Export Assistance Center, Midtown Building, 10th Floor, 420 Ponce de Leon Avenue, San Juan, PR 00918.

Dated: October 2, 2003.

Dennis Puccinelli,

Executive Secretary.

[FR Doc. 03–25775 Filed 10–9–03; 8:45 am]

BILLING CODE 3510–DS–P

DEPARTMENT OF COMMERCE

Bureau of Industry and Security

Sensors and Instrumentation Technical Advisory Committee; Notice of Partially Closed Meeting

The Sensors and Instrumentation Technical Advisory Committee (SITAC) will not meet on October 28, 2003, 9:30 a.m., in the Herbert C. Hoover Building, Room 3884, 14th Street between Constitution and Pennsylvania Avenues, NW., Washington, DC. The Committee advises the Office of the Assistant Secretary for Export Administration on technical questions that affect the level of export controls applicable to sensors and instrumentation equipment and technology.

Agenda

Public Session

1. Opening remarks and introductions.
2. SITAC Annual Report.
3. Discussion on laser proposal.
4. Discussion on export compliance training initiative.
5. Update on Wassenaar Arrangement negotiations.
6. Presentation of papers and comments by the public.

Closed Session

7. Discussion of matters properly classified under Executive Order 12958, dealing with the U.S. export control program and strategic criteria related thereto.

A limited number of seats will be available during the public session of the meeting. Reservations are not accepted. To the extent that time permits, members of the public may present oral statements to the Committee. The public may submit written statements at any time before or after the meeting. However, to facilitate distribution of public presentation materials to the Committee members, the Committee suggests that presenters forward the public presentation materials prior to the meeting date to the following address: Ms. Lee Ann Carpenter, OSIES/EA/BIS MS: 3876, U.S. Department of Commerce, 14th St. & Constitution Ave., NW., Washington, DC 20230.

The Assistant Secretary for Administration, with the concurrence of the General Counsel, formally determined on November 29, 2001, pursuant to section 10(d) of the Federal Advisory Committee Act, as amended, that the series of meetings of the Committee and of any Subcommittees thereof, dealing with the classified materials listed in 5 U.S.C. 552b(c)(1) shall be exempt from the provisions relating to public meetings found in section 10(a)9\(1) and 10(a)(3), of the Federal Advisory Committee Act. The remaining series of meetings or portions thereof will be open to the public.

For more information contact Lee Ann Carpenter on (202) 482–2583.

Dated: October 7, 2003.

Lee Ann Carpenter,

Committee Liaison Officer.

[FR Doc. 03–25737 Filed 10–9–03; 8:45 am]

BILLING CODE 3510–JT–M

DEPARTMENT OF COMMERCE

International Trade Administration

[A–570–866]

Certain Folding Gift Boxes From the People's Republic of China

AGENCY: Import Administration, International Trade Administration, Department of Commerce.

ACTION: Notice of preliminary results of antidumping duty administrative review.

SUMMARY: In response to requests from interested parties, the Department of Commerce is conducting an administrative review of the antidumping duty order on certain folding gift boxes from the People's Republic of China. The review covers two manufacturers/exporters and the period of review is August 6, 2001, through December 31, 2002.

We have preliminarily determined that sales have been made below normal value by one of the companies subject to this review. If these preliminary results are adopted in our final results of administrative review, we will instruct the Bureau of Customs and Border Protection to assess antidumping duties on all appropriate entries.

EFFECTIVE DATE: October 10, 2003.

FOR FURTHER INFORMATION CONTACT: Jennifer Moats (Red Point), Yang Jin Chun (Yun Choy), or Thomas Schauer, Import Administration, International Trade Administration, U.S. Department of Commerce, 14th Street and Constitution Avenue, NW., Washington, DC 20230; telephone: (202) 482–5047, (202) 482–5760, and (202) 482–0410, respectively.

SUPPLEMENTARY INFORMATION:

Case History

On January 8, 2002, we published in the **Federal Register** the antidumping duty order on folding gift boxes from the People's Republic of China (PRC). *See Antidumping Duty Order: Certain Folding Gift Boxes from the People's Republic of China,* 67 FR 864 (Jan. 8, 2002).

On January 2, 2003, we published a notice of opportunity to request an antidumping duty administrative review on folding gift boxes from the PRC. *See Antidumping or Countervailing Duty Order, Finding, or Suspended Investigation; Opportunity to Request Administrative Review,* 68 FR 80 (Jan. 2, 2003). On January 30, 2003, pursuant to 19 CFR 351.213(b)(2), Red Point Paper Products Co., Ltd. (Red Point), a producer covered by the antidumping duty order, requested that the Department conduct an administrative review of the company. On January 31, 2003, pursuant to 19 CFR 351.213(b)(1), U.S. folding gift box producers Harvard Folding Box Company, Inc., and Field Container Company L.P. requested that the Department conduct an administrative review of Yun Choy Ltd. (Yun Choy), a Chinese producer and/or exporter of the subject merchandise. On February 21, 2003, in accordance with section 751(a) of the Tariff Act of 1930, as amended (the Act) and 19 CFR 351.221(c)(1)(i), we issued a notice of initiation of an antidumping duty administrative review of this order and named Red Point and Yun Choy as respondents of this review. *See Initiation of Antidumping and Countervailing Duty Administrative Reviews,* 68 FR 9048 (Feb. 27, 2003).

On April 14, 2003, Red Point submitted its Section A response, on April 21, 2003, its Sections C and D responses, and on June 11, 2003, its supplemental responses. Yun Choy received the original questionnaire but did not respond. *See* ''The PRC-Wide Rate and Use of Facts Otherwise Available'' section below.

Scope of Order

The products covered by this antidumping duty order are certain folding gift boxes. Certain folding gift boxes are a type of folding or knock-down carton manufactured from paper or paperboard. Certain folding gift boxes are produced from a variety of recycled and virgin paper or paperboard materials, including, but not limited to, clay-coated paper or paperboard and kraft (bleached or unbleached) paper or paperboard. The scope of the order excludes gift boxes manufactured from paper or paperboard of a thickness of more than 0.8 millimeters, corrugated paperboard, or paper mache. The scope of the order also excludes those gift boxes for which no side of the box, when assembled, is at least nine inches in length.

Certain folding gift boxes are typically decorated with a holiday motif using various processes, including printing, embossing, debossing, and foil stamping, but may also be plain white or printed with a single color. The subject merchandise includes certain folding gift boxes, with or without handles, whether finished or unfinished, and whether in one-piece or multi-piece configuration. One-piece gift boxes are die-cut or otherwise formed so that the top, bottom, and sides form a single, contiguous unit. Two-piece gift boxes are those with a folded bottom and a folded top as separate pieces. Certain folding gift boxes are generally packaged in shrink-wrap, cellophane, or other packaging materials, in single or multi-box packs for sale to the retail customer. The scope of the order excludes folding gift boxes that have a retailer's name, logo, trademark or similar company information printed prominently on the box's top exterior (such folding gift boxes are often known as ''not-for-resale'' gift boxes or ''give-away'' gift boxes and may be provided by department and specialty stores at no charge to their retail customers). The scope of the order also excludes folding gift boxes where both the outside of the box is a single color and the box is not packaged in shrink-wrap, cellophane, other resin-based packaging films, or paperboard.

Imports of the subject merchandise are classified under *Harmonized Tariff Schedules of the United States* (HTSUS) subheadings 4819.20.00.40 and 4819.50.40.60. These subheadings also cover products that are outside the scope of the order. Furthermore, although the HTSUS subheadings are provided for convenience and customs purposes, our written description of the scope of the order is dispositive.

Non-Market-Economy Country Status

The Department has treated the PRC as a non-market-economy (NME) country in all past antidumping duty administrative reviews. *See, e.g., Final Results of Antidumping Duty Administrative Review: Synthetic Indigo from the People's Republic of China,* 68 FR 53711, 53712 (Sep. 12, 2003), and *Preliminary Results and Preliminary Partial Rescission of the Antidumping Administrative Review: Petroleum Wax Candles from the People's Republic of China,* 68 FR 53109, 53114 (Sep. 9, 2003). A designation as an NME remains in effect until it is revoked by the Department. *See* section 771(18)(C) of the Act.

No party in this review has requested a revocation of the PRC's NME status. Therefore, we have preliminarily determined to continue to treat the PRC as an NME. When we review imports from an NME, section 773(c)(1) of the Act directs us to base the normal value (NV) on the NME producer's factors of production, valued in a market economy at a comparable level of economic development and that is a significant producer of comparable merchandise. The sources used to value individual factors are discussed in the ''Factor Valuations'' section, below.

Separate Rates

In proceedings involving NME countries, the Department begins with a rebuttable presumption that all companies within the country are subject to government control and thus should be assessed a single antidumping duty rate. In this case, Red Point has requested a separate company-specific rate. Red Point is a Hong King company wholly owned by non-PRC nationals. Hong Kong companies are treated as market-economy companies because it is considered as a separate customs territory within the PRC, as it was under British rule. *See Application of U.S. Antidumping and Countervailing Duty Laws to Hong Kong,* 62 FR 42965 (Aug. 11, 1997). Therefore, we determine that it is appropriate to calculate a separate rate for Red Point. Yun Choy did not submit any type of response to the Department's antidumping duty questionnaire. We preliminarily determine that Yun Choy did not establish its entitlement to a separate rate in this review and is therefore presumed to be part of the PRC NME entity and, as such, is subject to the PRC country-wide rate. *See* ''The PRC-Wide Rate and Use of Facts Otherwise Available'' section below.

The PRC-Wide Rate and Use of Facts Otherwise Available

Both respondents were given the opportunity to respond to the Department's questionnaire. As explained above, we received a questionnaire response from Red Point and we have calculated a separate rate for Red Point. The PRC-wide rate applies to all entries of subject merchandise except for entries from Red Point and Max Fortune, a producer which was excluded from the antidumping duty order.

As discussed above, Yun Choy is appropriately considered part of the PRC-wide entity. Yun Choy did not respond to the Department's questionnaire. Section 776(a)(2) of the Act provides that, if an interested party or any other person (A) withholds information that has been requested by the administering authority, (B) fails to provide such information by the deadlines for the submission of the information or in the form and manner requested, subject to subsections (c)(1) and (e) of section 782, (C) significantly impedes a proceeding under this title, or (D) provides such information but the information cannot be verified as provided in section 782(i), the Department shall, subject to section 782(d), use the facts otherwise available in reaching the applicable determination under this title.

Because the PRC entity did not respond to the Department's questionnaire, we find that, in accordance with sections 776(a)(2)(A) and (B) of the Act, the use of total facts available is appropriate. *See, e.g., Final Results of Antidumping Duty Administrative Review for Two Manufacturers/Exporters: Certain Preserved Mushrooms from the People's Republic of China,* 65 FR 50183, 50184 (Aug. 17, 2000). For a more detailed discussion, see the following determinations: *Preliminary Results of Antidumping Duty Administrative Review for Two Manufacturers/ Exporters: Certain Preserved Mushrooms from the People's Republic of China,* 65 FR 40609, 40611 (June 30, 2000); *Final Determinations of Sales at Less Than Fair Value: Persulfates from the People's Republic of China,* 62 FR 27222, 27224 (May 19, 1997); *Preliminary Results of Antidumping Duty Administrative Review: Certain Grain-Oriented Electrical Steel from Italy,* 61 FR 36551, 36552 (July 11, 1996); *Final Results of Antidumping Duty Administrative Review: Certain Grain-Oriented Electrical Steel from Italy,* 62 FR 2655 (Jan. 17, 1997). Because Yun Choy provided no information, sections 782(d) and (e) of the Act are not relevant to our analysis.

Section 776(b) of the Act provides that, if the Department finds that an interested party ''has failed to cooperate by not acting to the best of its ability to comply with a request for information,'' the Department may use information that is adverse to the interests of the party as facts otherwise available. Adverse inferences are appropriate ''to ensure that the party does not obtain a more favorable result by failing to cooperate than if it had cooperated full.'' *See* Statement of Administrative Action (SAA) accompanying the URAA, H. Doc. No. 103–316, at 870 (1994).

Section 776(b) of the Act authorizes the Department to use as adverse facts available information derived from the petition, the final determination from the less-than-fair-value (LTFV) investigation, a previous administrative review, or any other information placed on the record. Under section 782(c) of the Act, a respondent has a responsibility not only to notify the Department if it is unable to provide requested information but also to provide a ''full explanation and suggested alternative forms.'' On February 27, 2003, the Department transmitted its questionnaire to Yun Choy *via* Federal Express. We confirmed that Yun Choy signed for and received the questionnaire on March 3, 2003 (Hong Kong date). Yun Choy did not submit a response to our questionnaire by the due date, April 7, 2003. On April 11, 2003, the Department mailed a letter *via* Federal Express to Yun Choy asking it to inform the Department as to whether it has submitted or intended to submit a response to the questionnaire or whether it and its affiliates did not have any U.S. sales or shipments during the review period. Yun Choy received the letter on April 14, 2003 (Hong Kong date), but it did not respond to the letter by the due date, April 21, 2003. Because Yun Choy did not provide a response to the Department's questionnaire, the Department is unable to determine Yun Choy's eligibility for a separate rate. Thus, Yun Choy has not rebutted its presumption of government control and is presumed to be part of the PRC entity. Therefore, we determine that Yun Choy and, thereby, the PRC-entity failed to cooperate to the best of its ability, making the use of an adverse inference appropriate.

In accordance with the Department's practice, we have preliminarily assigned to the PRC entity (including Yun Choy) the rate of 164.75 percent as adverse facts available. *See, e.g., Rescission of Second New Shipper Review and Final Results and Partial Rescission of First Antidumping Duty Administrative Review: Brake Rotors From the People's Republic of China,* 64 FR 61581, 61584 (Nov. 12, 1999). This rate is the highest dumping margin determined in any segment of this proceeding and was established in the LTFV investigation. See *Final Determination of Sales at Less Than Fair Value: Certain Folding Gift Boxes from the People's Republic of China,* 66 FR 58115, 58118 (Nov. 20, 2001) (*Final Determination*). In selecting a rate for adverse facts available, the Department selects a rate that is sufficiently adverse ''as to effectuate the purpose of the facts available rule to induce respondents to provide the Department with complete and accurate information in a timely manner.'' *See Final Determination of Sales at Less Than Fair Value: Static Random Access Memory Semiconductors from Taiwan,* 63 FR 8909, 8932 (Feb. 23, 1998).

Section 776(c) of the Act provides that, where the Department selects from among the facts otherwise available and relies on ''secondary information,'' the Department shall, to the extent practicable, corroborate that information from independent sources reasonably at the Department's disposal. Secondary information is ''information derived from the petition that gave rise to the investigation or review, the final determination concerning the subject merchandise, or any previous review under section 751 concerning the subject merchandise.'' *See* SAA at 870. The word ''corroborate'' means to determine that the information used has probative value. *Id.* To corroborate secondary information, the Department will, to the extent practicable, examine the reliability and relevance of the information to be used. We corroborated the rate of 164.75 percent in the LTFV investigation. *See Preliminary Determination of Sales at Less Than Fair Value: Certain Folding Gift Boxes From the People's Republic of China,* 66 FR 40973, 40976 (Aug. 6, 2001). We have no reason to question the reliability of this data for this review and no party has argued that it is not reliable. With respect to the relevance aspect of corroboration, however, the Department will consider information reasonably at its disposal to determine whether a margin continues to have relevance. Where circumstances indicate that the selected margin is not appropriate as adverse facts available, the Department will disregard the margin and determine an appropriate margin. For example, in *Final Results of Antidumping Duty Administrative Reviews: Fresh Cut Flowers from Mexico,* 61 FR 6812 (Feb. 22, 1996), the

Department disregarded the highest margin in that case as adverse best information available (the predecessor to facts available) because the margin was based on another company's uncharacteristic business expense resulting in an unusually high margin. Similarly, the Department does not apply a margin that has been discredited. *See D & L Supply Co.* v. *United States,* 113 F.3d 1220, 1221 (Fed. Cir. 1997) (the Department will not use a margin that has been judicially invalidated). None of these unusual circumstances are present here. Therefore, we consider the PRC-wide rate, which is the rate from the LTFV investigation, relevant for this review.

Furthermore, since this rate is the rate from the final determination, we established the reliability and relevance of the rate in the investigation. *See Final Determination.* As there is no information on the record of this review that demonstrates that this final rate from the final determination is not reliable for use as the adverse facts available rate for the PRC-wide rate, we determine that this rate has probative value and, therefore, is an appropriate basis for the PRC-wide rate to be applied in this review to exports of subject merchandise by Yun Choy.

Surrogate Country

When the Department is reviewing imports from an NME country, section 773(c)(1) of the Act directs it to base NV, in most circumstances, on the NME producer's factors of production, valued in a surrogate market-economy country or countries selected in accordance with section 773(c)(4) of the Act. In accordance with that provision, the Department shall utilize, to the extent possible, the prices or costs of factors of production in one or more market-economy countries that are at a level of economic development comparable to the NME country and are significant producers of comparable merchandise.

The Department has determined that India, Pakistan, Indonesia, Sri Lanka, and the Philippines are countries comparable to the PRC in terms of economic development. See Memorandum from Ron Lorentzen to Laurie Parkhill: Administrative Review of the Antidumping Duty Order on Folding Gift Boxes from the People's Republic of China: Request for a List of Surrogate Countries, dated June 30, 2003. Normally, the Department will select an appropriate surrogate based on the availability and reliability of data from these countries. In this case, we have found that India is a significant producer of comparable merchandise and we have reliable data from India which we can use to value the factors of production.

We have used India as the surrogate country and, accordingly, we have calculated NV using Indian prices to value the PRC producers' factors of production, when available and appropriate. See Surrogate Country Selection Memorandum to The File from Jennifer Moats dated October 3, 2003 (Surrogate Country Memorandum). We have obtained and relied upon publicly available information wherever possible. See Factor Valuation Memorandum to The File from Jennifer Moats, dated October 3, 2003 (Factor Valuation Memorandum).

In accordance with 19 CFR 351.301(c)(3)(ii), for the final results of an administrative review, interested parties may submit publicly available information to value the factors of production within 20 days after the date of publication of these preliminary results.

Export Price

In accordance with section 772(a) of the Act, we used export price (EP) for Red Point because the subject merchandise was sold directly to unaffiliated customers in the United States prior to importation and because constructed export price was not otherwise warranted based on the facts of the record.

We calculated EP based on free-on-board prices to unaffiliated purchasers in the United States. We made deductions, where appropriate, for foreign inland freight from the plant to the port of exportation and for domestic brokerage and handling in accordance with section 772(c)(2)(A) of the Act. All of these services were provided by Hong Kong companies and charged in Hong Kong dollars. Therefore, valuation of these charges based on surrogate values was not necessary.

Normal Value

Section 773(c)(1) of the Act provides that the Department shall determine the NV using a factors-of-production methodology if (1) the merchandise is exported from an NME country and (2) the information does not permit the calculation of NV using home-market prices, third-country prices, or constructed value under section 773(a) of the Act.

Factors of production include (1) hours of labor required, (2) quantities of raw materials employed, (3) amounts of energy and other utilities consumed, and (4) representative capital costs. We used factors of production reported by Red Point for materials, energy, labor, by-products, and packing. We valued all input factors not obtained from market economies using publicly available published information as discussed in the ''Surrogate Country'' and ''Factor Valuations'' sections of this notice.

In accordance with 19 CFR 351.408(c)(1), where a producer sources an input from a market economy and pays for it in market-economy currency, the Department employs the actual price paid for the input to calculate the factors-based NV. *See also Lasko Metal Products* v. *United States,* 437 F.3d 1442, 1445–1446 (Fed. Cir. 1994). Red Point reported that some of its inputs were purchased from market economies and paid for in market-economy currency. See ''Factor Valuations'' section below.

Factor Valuations

In accordance with section 773(c) of the Act, we calculated NV based on factors of production reported by Red Point for the POR. To calculate NV, we multiplied the reported per-unit factor quantities by publicly available Indian surrogate values (except as noted below). In selecting the surrogate values, we considered the quality, specificity, and contemporaneity of the data. As appropriate, we adjusted input prices by including freight costs to make them delivered prices. For a detailed description of all surrogate values used for Red Point, *see* the Factor Valuation Memorandum. For a detailed description of all actual values used for market-economy inputs, *see* the Red Point Preliminary Calculation Memorandum dated October 3, 2003.

Because we used Indian import values to value inputs purchased domestically by the Chinese producers, we added to Indian surrogate values a surrogate freight cost calculated using the shorter of the reported distance from the domestic supplier to the factory or the distance from the nearest seaport to the factory. This adjustment is in accordance with *Sigma Corp.* v. *United States,* 117 F.3d 1401, 1408 (Fed. Cir. 1997).

Except as noted below, we valued raw material inputs using the average unit import values derived from the *World Trade Atlas,* published by the Global Trade Information Services, Inc. *See* the Global Trade Information Services Web site at *http://www.gtis.com/wta.htm.* (The source of the data for the *World Trade Atlas* is the Directorate General of Commercial Intelligence and Statistics (DGCI&S) of the Indian Ministry of Commerce and Industry. The DGCI&S also releases the Monthly Statistics of Foreign Trade of India.)

As explained above, Red Point purchased certain raw material inputs

from market-economy suppliers and paid for them in market-economy currencies. See Red Point's April 21, 2003, section D response at pages 5–6 for a description of these inputs. The evidence provided by Red Point indicated that its market-economy purchases of these inputs were paid for by Red Point in a market-economy currency. *See* Red Point's April 21, 2003, section D response at page 6. Therefore, in accordance with 19 CFR 351.408(c)(1), the Department has determined to use the market-economy prices as reported by Red Point to value these inputs from both market-economy and NME suppliers because the market-economy inputs represented a significant quantity of the inputs in each case and they were paid for in a market-economy currency.

To value electricity, we used the all-India average for industrial electricity as reported in Annexure 4.26 of the *Annual Report (2001–02) on The Working of State Electricity Boards & Electricity Departments,* published by the Planning Commission (Power & Energy Division), Government of India, in May 2002. This information is included in Exhibit 11 of Red Point's August 25, 2003, submission.

Red Point reported the following packing inputs: cartons, shrink wrap, tape, labels, keep-fresh film, and woodfree paper. We used the *World Trade Atlas* for Red Point to value these items. *See* the Factor Valuation Memorandum.

We used Indian transport information to value delivery costs for raw materials. To calculate domestic inland freight (by truck), we used a price report from Iron & Steel Newsletter for transporting material between Mumbai and Pune, Mumbai and Vapi/Daman, and Delhi and Gurgaon which was provided in Exhibit 12 of Red Point's August 25, 2003, surrogate-value submission. We used the rates between these cities because they were within 200 kilometers of each other and comparable to the distance between Red Point's factory and Hong Kong, the port of exportation. We converted the Indian Rupee value to U.S. dollars.

Red Point identified a by-product (paperboard scrap) which it claimed was sold to customers in the PRC. The Department has offset Red Point's cost of production by the value of a reported by-product where Red Point's response indicated that it was sold. *See* the Factor Valuation Memorandum for a complete discussion of by-product credits given and the surrogate value used.

To value factory overhead expenses, selling, general and administrative expenses (SG&A), and profit, we calculated a rate based on financial statements from an Indian producer of comparable merchandise, Rollatainers Limited. For a further discussion of the surrogate values for overhead, SG&A, and profit, *see* the Factor Valuation Memorandum.

For labor, consistent with 19 CFR 351.408(c)(3), we used the PRC regression-based wage rate at Import Administration's home page, Expected Wages of Selected NME Countries, revised in February 2003. *See http://ia.ita.doc.gov/wages/index.html.* The source of the wage-rate data on the Import Administration's Web site is the *2001 Year Book of Labour Statistics,* International Labor Office (Geneva: 2001), Chapter 5B: Wages in Manufacturing.

Preliminary Results of Review

As a result of our review, we preliminarily determine the following percentage weighted-average dumping margins on folding gift boxes for the period August 6, 2001, through December 31, 2002:

Exporter/manufacturer	Margin (percent)
Red Point	0.00
PRC-wide rate (including Yun Choy)	164.75

Public Comment

Pursuant to 19 CFR 351.309(c)(ii), interested parties may submit case briefs within 30 days of the date of publication of this notice. Furthermore, as discussed in 19 CFR 351.309(d), rebuttal briefs, which must be limited to issues raised in the case briefs, may be filed within 5 days after the time limit for filing the case brief. Parties who submit case or rebuttal briefs for this review are requested to submit with each argument (1) a statement of the issue, and (2) a brief summary of the argument (five pages maximum, including footnotes) with an electronic version included. A list of authorities used should accompany any briefs submitted to the Department. *See* 19 CFR 351.309(c)(2) and (d)(2).

Pursuant to 19 CFR 351.310(c), any interested party may request a hearing within 30 days of the date of publication of this notice. Issues raised in a hearing will be limited to those raised in the respective case and rebuttal briefs. If requested, a hearing will be held at the main Commerce Department building at a time and location to be determined. Interested parties who wish to request a hearing, or to participate if one is requested, must submit a written request to the Assistant Secretary for Import Administration, United States Department of Commerce, Room 1870, within 30 days of the date of publication of this notice. A request should contain (1) the party's name, address, and telephone number, (2) the number of participants, and (3) a list of the issues to be discussed. Parties should confirm by telephone the date, time, and location of the hearing two days before the scheduled date.

The Department will publish the final results of this administrative review, including the results of its analysis of issues raised in any such written briefs. The Department will issue the final results of review within 120 days of publication of these preliminary results.

Assessment Rates

The Department shall determine, and the Bureau of Customs and Border Protection shall assess, antidumping duties on all appropriate entries. In accordance with 19 CFR 351.212(b)(1), we have calculated, whenever possible, an exporter/importer (or customer)-specific assessment value for subject merchandise.

Cash-Deposit Requirements

The following deposit requirements will be effective upon publication of the notice of final results of administrative review for all shipments of folding gift boxes entered, or withdrawn from warehouse, for consumption on or after the date of publication, as provided by section 751(a)(1) of the Act: (1) The cash-deposit rates for the reviewed companies will be the rates established in the final results of review; (2) for previously investigated or reviewed companies not listed above, the cash-deposit rate will continue to be the company-specific rate published for the most recent period; (3) if the exporter is not a firm covered in this review, a prior review, or the LTFV investigation, but the manufacturer is, the cash-deposit rate will be the rate established for the most recent period for the manufacturer of the merchandise; and (4) the cash-deposit rate for all other manufacturers or exporters (except for Max Fortune, which was excluded from the antidumping duty order) will continue to be the ''PRC-wide'' rate from the LTFV investigation. *See Final Determination.*

These deposit requirements, when imposed, shall remain in effect until publication of the final results of the next administrative review.

This notice also serves as a preliminary reminder to importers of their responsibility under 19 CFR 351.402(f) to file a certificate regarding the reimbursement of antidumping

duties prior to liquidation of the relevant entries during this review period. Failure to comply with this requirement could result in the Department's presumption that reimbursement of antidumping duties occurred and the subsequent assessment of doubled antidumping duties.

These preliminary results of administrative review are issued and published in accordance with sections 751(a)(1) and 777(i)(1) of the Act.

Dated: October 3, 2003.

James J. Jochum,

Assistant Secretary for Import Administration.

[FR Doc. 03–25773 Filed 10–9–03; 8:45 am]

BILLING CODE 3510–DS–P

DEPARTMENT OF COMMERCE

International Trade Administration

[A-570–847]

Persulfates from the People's Republic of China: Notice of Preliminary Results of Changed Circumstances Review

AGENCY: Import Administration, International Trade Administration, Department of Commerce.

EFFECTIVE DATE: October 10, 2003.

FOR FURTHER INFORMATION CONTACT: Mike Strollo or Patrick Connolly at (202) 482–0629 or (202) 482–1779, respectively, Office of AD/CVD Enforcement, Office 2, Import Administration, International Trade Administration, U.S. Department of Commerce, 14th Street and Constitution Avenue, NW, Washington, DC 20230.

SUMMARY: On February 21, 2003, in response to a request by FMC Corporation, a U.S. producer of persulfates and an interested party in this proceeding, the Department of Commerce initiated a changed circumstances review of the antidumping duty order on persulfates from the People's Republic of China, as described below.

We preliminarily determine that Degussa-AJ (Shanghai) Initiators Co., Ltd.'s factors of production have not changed substantially since Degussa AG's investment in Shanghai Ai Jian Reagent Works. As a result, the Department will consider in any future revocation inquiry any administrative reviews in which Shanghai Ai Jian Import and Export Corporation procured its products exported to the United States from Shanghai Ai Jian Reagent Works. Interested parties are invited to comment on these preliminary results.

SUPPLEMENTARY INFORMATION:

Background

On July 7, 1997, the Department published in the **Federal Register** the antidumping duty order on persulfates from the PRC. *See Notice of Antidumping Duty Order and Amended Final Determination of Sales at Less Than Fair Value: Persulfates From the People's Republic of China*, 62 FR 36259 (July 7, 1997). In addition, on August 27, 2002, the Department initiated an administrative review of the antidumping duty order on persulfates covering one exporter from the People's Republic of China (PRC), Shanghai Ai Jian Import and Export Corporation (Ai Jian). *See Initiation of Antidumping and Countervailing Duty Administrative Reviews and Requests for Revocation in Part*, 67 FR 55000 (Aug. 27, 2002). As part of its request for review, Ai Jian asked the Department to revoke the antidumping duty order with respect to its exports produced by Ai Jian's supplying factory, Shanghai Ai Jian Reagent Works (AJ Works).

On January 7, 2003, FMC Corporation (FMC), a U.S. producer of persulfates, notified the Department that Degussa AG, a German company, had purchased 70 percent of AJ Works and that, as a result, the name of the factory had been changed to Degussa (Shanghai) Initiators Co., Ltd. (Degussa-AJ). FMC requested that the Department initiate a changed circumstances review to determine whether Degussa-AJ is, in fact, the successor-in-interest to AJ Works, and hence, whether it should be considered the same entity with regards to the pending revocation request.

Based on the information submitted by FMC regarding Degussa AG's investment in AJ Works, the Department determined that there was sufficient evidence of changed circumstances to warrant a review under section 751(b)(1) of the Tariff Act of 1930, as amended (the Act), and 19 CFR 351.216(d). Consequently, the Department published a notice of initiation of this review on February 28, 2003. *See Persulfates from the People's Republic of China: Notice of Initiation of Changed Circumstances Review*, 68 FR 9636 (Feb. 28, 2003) (*Initiation Notice*). The Department denied FMC's request that the Department issue preliminary results of the changed circumstances review in conjunction with the notice of initiation because FMC did not provide sufficient evidence to support a preliminary finding. The Department invited comments from interested parties in the initiation notice and stated that it would publish in the Federal Register a notice of preliminary results of changed circumstances review, in accordance with 19 CFR 351.222(c)(3)(i), prior to the issuance of the final results.

Since the Department's notice of initiation of this review, the following events have occurred:

On March 11, 2003, the Department issued a questionnaire to Degussa-AJ requesting details of Degussa AG's investment in AJ Works and its impact on the production operations of Degussa-AJ. Ai Jian and Degussa-AJ (collectively, Ai Jian/Degussa) responded to this questionnaire on April 1, 2003.

On March 19, 2003, Ai Jian withdrew its request for revocation in the 2001–2002 administrative review.

On May 1, 2003, the petitioner submitted a letter in which it argued that Degussa-AJ is not the successor-in-interest to AJ Works. The petitioner further argued that the Department should assign the PRC-wide rate to all imports from Ai Jian, retroactive to the date of Degussa AG's purchase of AJ Works. Ai Jian/Degussa responded to these arguments on May 12, 2003.

On May 2, 2003, the Department issued a supplemental questionnaire to Ai Jian/Degussa. Ai Jian/Degussa responded to this questionnaire on May 23, 2003.

On July 31, 2003, the petitioner requested that the Department conduct an administrative review of Ai Jian covering the period July 1, 2002, through June 30, 2003.

Scope Of Review

The products covered by this review are persulfates, including ammonium, potassium, and sodium persulfates. The chemical formula for these persulfates are, respectively, $(NH_4)_2S_2O_8$, $K_2S_2O_8$, and $Na_2S_2O_8$. Potassium persulfates are currently classifiable under subheading 2833.40.10 of the *Harmonized Tariff Schedule of the United States* (HTSUS). Sodium persulfates are classifiable under HTSUS subheading 2833.40.20. Ammonium and other persulfates are classifiable under HTSUS subheadings 2833.40.50 and 2833.40.60. Although the HTSUS subheadings are provided for convenience and customs purposes, the written description of the scope of this review is dispositive.

Preliminary Results

The Department conducts successor-in-interest inquiries under section 751(b) of the Act and 19 CFR 351.216 and 221(c)(3) (*i.e.*, the provisions governing changed circumstances reviews). Because these provisions do not provide explicit guidance, the Department has developed the following framework for conduct of these reviews.

Specifically, in making a normal successor-in-interest determination, the Department examines several factors including, but not limited to, changes in: (1) management; (2) production facilities; (3) supplier relationships; and (4) customer base. *See Notice of Final Results of Changed Circumstances Antidumping Duty Administrative Review: Polychloroprene Rubber From Japan*, 67 FR 58 (Jan. 2, 2002) (*Polychloroprene Rubber from Japan*), and *Brass Sheet and Strip from Canada: Notice of Final Results of Antidumping Administrative Review*, 57 FR 20460 (May 13, 1992) (*Brass Sheet and Strip from Canada*). While no one of these factors is dispositive, the Department will generally consider the new company to be the successor to the previous company if its resulting operation is not materially dissimilar to that of its predecessor. *See Industrial Phosphoric Acid from Israel: Final Results of Changed Circumstances Review*, 59 FR 6944 (Feb. 14, 1994).

This analytical framework is tailored for exporters of subject merchandise, because any findings made pursuant to changed circumstances reviews are intended to apply to entities assigned their own specific cash deposit rates. Because the circumstances here involve a significant investment by a market economy company in a producer located in a nonmarket economy country (NME), not an exporter assigned a separate cash deposit rate, the analysis applied here differs from determinations in other changed circumstances reviews. *See* the *Initiation Notice*, 68 at FR 9637.

The Department's general practice in cases involving NME countries is to assign rates to exporters rather than producers because the exporters are the entities that determine the price at which the subject merchandise is sold to the United States. *See Notice of Final Determination of Sales at Less Than Fair Value: Persulfates From the People's Republic of China*, 62 FR 27222, 27228 (May 19, 1997) (*Persulfates LTFV Final*). *See also Manganese Metal from the People's Republic of China; Final Results and Partial Rescission of Antidumping Duty Administrative Review*, 63 FR 12441, 12449 (Mar. 13, 1998). *See also Notice of Final Determination of Sales at Less Than Fair Value: Pure Magnesium in Granular Form From the People's Republic of China*, 66 FR 49345 (Sept. 27, 2001) and accompanying decision memorandum at *Comment 2. See also Antidumping Duties; Countervailing Duties; Final Rule*, 62 FR 27295, 27303 (May 19, 1997). In the event that an exporter may qualify for revocation, however, such revocation normally is limited to merchandise of certain producers. The regulations address revocation determinations involving non-producing exporters:

> In the case of an exporter that is not the producer of subject merchandise, the Secretary normally will revoke an order in part under paragraph (b)(2) of this section only with respect to subject merchandise produced or supplied by those companies that supplied the exporter during the time period that formed the basis for the revocation.

See 19 CFR 351.222(b)(3).

Therefore, this changed circumstances review has relevance only to the extent that it will impact Ai Jian's future revocation eligibility. Pursuant to 19 CFR 351.222(b)(3), the Department will revoke an exporter (*e.g.*, Ai Jian) from an order only with respect to subject merchandise produced or supplied by the producer(s) that supplied the exporter during the time period that forms the basis for the revocation (*i.e.*, three consecutive years). Should the Department find that the factors of production have not changed substantially since Degussa AG's investment in AJ Works, the Department will consider in any future revocation inquiry any administrative reviews in which Ai Jian procured its products exported to the United States from AJ Works. On the contrary, should the Department find at the final results of this changed circumstances review that the factors of production of Degussa-AJ have changed so substantially from the merchandise produced by AJ Works that the resulting operation is materially dissimilar to that of its predecessor, Ai Jian will need to complete three new administrative reviews with Degussa-AJ, its ''new'' supplier, before it may qualify for revocation.

In order to evaluate whether Degussa AG's investment in AJ Works impacts the Department's previous dumping findings made with respect to Ai Jian, therefore, we have focused our analysis on any changes in Degussa-AJ's factors of production. Under the Department's NME methodology, these factors of production form the basis for normal value and, as a result, are an essential component of the margin calculated for Ai Jian. Therefore, we examined the following areas in making our determination: (1) management; (2) production facilities; and (3) supplier relationships. Because Degussa-AJ's customer base is not relevant to our analysis, it is not necessary to address this component.[1]

In its April 1 and May 23, 2003, submissions, Degussa-AJ stated that there were no changes to its production facilities, production process, or product line since Degussa AG's investment in AJ Works.

Degussa-AJ explained that AJ Works began to undertake two changes to its ammonium persulfate workshop in early 2002. Degussa-AJ has continued work on these improvements, which were ongoing as of the submission date of Degussa-AJ's last questionnaire response. Specifically, Degussa-AJ is expanding its production capacity for producing ammonium persulfate and, in addition, is working on a process improvement to decrease the yield loss of one of the factors of production, ammonium sulfate, which should reduce the consumption of this material input in the production process. With the exception of these two ongoing changes to its ammonium persulfate workshop, Degussa-AJ has only evaluated, but not initiated, any other changes to its production facilities and production process.

Additionally, Degussa-AJ has not determined when the evaluation of other improvements to its production facilities or production process will be complete, much less when actual changes might take place. Therefore, although there are two ongoing improvements to Degussa-AJ's production facilities and production process that should impact one of the factors of production (*i.e.*, self-produced ammonium sulfate), nothing in the respondent's questionnaire responses indicates that there have been any other changes, as of the date of the most recent questionnaire response, to Degussa-AJ's factors of production for persulfates as a result of Degussa AG's investment in AJ Works.

In addition to an examination of any changes to the production facility and production process, the Department

[1] We have not considered changes to Degussa-AJ's customer base in making our determination because: (1) any such changes do not have a substantive bearing on the company's factors of production; and (2) normally the Department considers neither an NME entity's home market customer base nor its home market sales transactions in making NME antidumping duty determinations. Furthermore, Degussa-AJ is merely a producer of subject merchandise and does not have its own separate antidumping duty rate. Were Degussa-AJ to sell subject merchandise to the United States, these entries would fall under the China-wide rate of 119.02 percent, not Ai Jian's rate. Changes to Degussa-AJ's customer base, therefore, would influence neither Degussa-AJ's nor Ai Jian's antidumping duty rate. For purposes of this determination, therefore, changes to Degussa-AJ's customer base do not have relevance.

examined other changes at Degussa-AJ. Although there were significant changes to Degussa-AJ's board of directors as a result of Degussa AG's investment in AJ Works, the factory management team has remained largely intact, and those employees now serve in the same or similar capacities as before Degussa AG's investment in AJ Works. Finally, there have been no changes to Degussa-AJ's suppliers or supplier relationships since Degussa AG's investment in AJ Works. For further discussion, see the October 3, 2003, memorandum to James J. Jochum, Assistant Secretary for Import Administration, from Jeffrey May, Deputy Assistant Secretary, Group I, entitled ''Factors of Production Analysis With Respect to Merchandise Considered for Revocation.''

Based on the information submitted by Ai Jian/Degussa, we preliminarily determine that Degussa-AJ's factors of production have not changed substantially since Degussa AG's investment in AJ Works. As a result, the Department will consider in any future revocation inquiry any administrative reviews in which Ai Jian procured its products exported to the United States from AJ Works. The current requirements for the cash deposit of estimated antidumping duties on the subject merchandise are not impacted by this determination.

Public Comment

Interested parties may request a hearing within 14 days after the publication of this notice. Any hearing, if requested, will be held 30 days after the publication of this notice, or the first workday thereafter. Interested parties may submit case briefs not later than 14 days after the date of publication of this notice. Rebuttal briefs, limited to issues raised in the case briefs, may be filed not later than 19 days after the date of publication of this notice. Parties who submit comments or rebuttal briefs in this proceeding are requested to submit with the argument: (1) a statement of the issue, and (2) a brief summary of the argument (no longer than five pages, including footnotes). In accordance with 19 CFR 351.216(e), the Department will issue its final results of review within 270 days after the date on which the changed circumstances review was initiated (*i.e.*, no later than November 18, 2003).

This notice is published in accordance with sections 751(b)(1) and (d) and 777(i) of the Act, and with 19 CFR 351.221(c)(3).

Dated: October 3, 2003.

James J. Jochum,

Assistant Secretary for Import Administration.

[FR Doc. 03–25771 Filed 10–9–03; 8:45 am]

BILLING CODE 3510–DS–S

DEPARTMENT OF COMMERCE

International Trade Administration

[A–427–820, A–428–830, A–475–829, A–580–847, A–412–822]

Notice of Amended Antidumping Duty Orders: Stainless Steel Bar From France, Germany, Italy, Korea, and the United Kingdom

AGENCY: Import Administration, International Trade Administration, Department of Commerce.

ACTION: Notice of amended antidumping duty orders.

EFFECTIVE DATE: October 10, 2003.

FOR FURTHER INFORMATION CONTACT: Andrew Smith or John Brinkmann, (202) 482–1276 or (202) 482–4126, respectively; Import Administration, International Trade Administration, U.S. Department of Commerce, 14th Street and Constitution Avenue, NW., Washington, DC 20230.

Summary

The Department of Commerce is amending its antidumping duty orders in these investigations to bring them into compliance with section 733(d) of the Tariff Act of 1930, as amended. Specifically, these antidumping duty orders are amended to state that the suspension of liquidation ordered in the preliminary determinations in these investigations shall be discontinued for subject merchandise entered on or after January 29, 2002, through March 7, 2002.

Scope of Order

For purposes of this order, the term ''stainless steel bar'' includes articles of stainless steel in straight lengths that have been either hot-rolled, forged, turned, cold-drawn, cold-rolled or otherwise cold-finished, or ground, having a uniform solid cross section along their whole length in the shape of circles, segments of circles, ovals, rectangles (including squares), triangles, hexagons, octagons, or other convex polygons. Stainless steel bar includes cold-finished stainless steel bars that are turned or ground in straight lengths, whether produced from hot-rolled bar or from straightened and cut rod or wire, and reinforcing bars that have indentations, ribs, grooves, or other deformations produced during the rolling process.

Except as specified above, the term does not include stainless steel semi-finished products, cut length flat-rolled products (*i.e.*, cut length rolled products which if less than 4.75 mm in thickness have a width measuring at least 10 times the thickness, or if 4.75 mm or more in thickness having a width which exceeds 150 mm and measures at least twice the thickness), products that have been cut from stainless steel sheet, strip or plate, wire (*i.e.*, cold-formed products in coils, of any uniform solid cross section along their whole length, which do not conform to the definition of flat-rolled products), and angles, shapes and sections.

The stainless steel bar subject to this investigation is currently classifiable under subheadings 7222.11.00.05, 7222.11.00.50, 7222.19.00.05, 7222.19.00.50, 7222.20.00.05, 7222.20.00.45, 7222.20.00.75, and 7222.30.00.00 of the *Harmonized Tariff Schedule of the United States* (''HTSUS''). Although the HTSUS subheadings are provided for convenience and customs purposes, the written description of the scope of this investigation is dispositive.

Background

On August 2, 2001, the Department of Commerce (''the Department'') preliminarily determined that stainless steel bar from France, Germany, Italy, Korea, and the United Kingdom was being sold in the United States at less than fair value (''LTFV''), as provided in section 735(a) of the Tariff Act of 1930, as amended (''the Act''). *See* 66 FR 40201 (August 2, 2001) for France; 66 FR 40208 (August 2, 2001) for Germany; 66 FR 40214 (August 2, 2001) for Italy; 66 FR 40222 (August 2, 2001) for Korea; 66 FR 40192 (August 2, 2001) for the United Kingdom (collectively ''*the SSBar Preliminary Determinations*'')

Due to scheduling problems evolving from the events of September 11, 2001, the Department tolled the final determination deadlines in these investigations until January 15, 2002. On January 15, 2002, the Department determined that stainless steel bar from France, Germany, Italy, Korea, and the United Kingdom was being sold in the United States at LTFV, as provided in section 735(a) of the Act. *See* 67 FR 3143 (January 23, 2002) for France; 67 FR 3159 (January 23, 2002) for Germany; 67 FR 3155 (January 23, 2002) for Italy; 67 FR 3149 (January 23, 2002) for Korea; 67 FR 3146 (January 23, 2002) for the United Kingdom (collectively *''the SSBar Final Determinations''*). The Department subsequently amended the

final determination of the antidumping duty investigation of stainless steel bar from Germany to correct ministerial errors. *See* 67 FR 10382 (March 7, 2002).

On February 28, 2002, the International Trade Commission (''ITC'') notified the Department of its final determinations pursuant to Section 735(b)(1)(A)(i) of the Act that an industry in the United States is materially injured by reason of LTFV imports of subject merchandise from France, Germany, Italy, Korea, and the United Kingdom. The ITC published its final affirmative injury determination on March 8, 2002. *See* 67 FR 10756 (March 8, 2002). Accordingly, the Department issued Antidumping Duty Orders in which it directed the U.S. Bureau of Customs and Border Protection (''BCBP'') to assess, upon further advice by the Department, antidumping duties equal to the amount by which the normal value of the merchandise exceeded the export price or constructed export price of the merchandise for all relevant entries of stainless steel bar from France, Germany, Italy, Korea, and the United Kingdom. *See* 67 FR 10385 (March 7, 2002) for France; 67 FR 10382 (March 7, 2002) for Germany; 67 FR 10384 (March 7, 2002) for Italy; 67 FR 10381 for Korea; 67 FR 10381 (March 7, 2002) for the United Kingdom (collectively ''*the SS Bar AD Orders*''). The Department directed the BCBP to assess antidumping duties on all unliquidated entries of imports of the subject merchandise that are entered, or withdrawn from warehouse, for consumption on or after August 2, 2001, the date on which the Department published its *SS Bar Preliminary Determinations* in the **Federal Register**.

Amended Antidumping Duty Orders

The *SS Bar Orders* incorrectly stated that antidumping duties will be assessed on all unliquidated entries of imports of the subject merchandise that are entered, or withdrawn from warehouse, for consumption on or after August 2, 2001, the date on which the Department published its notices of affirmative preliminary determinations in the **Federal Register**. Section 733(d) of the Act states that instructions issued pursuant to an affirmative preliminary determination ''may not remain in effect for more than 4 months'' except where, as was the case in these investigations, ''exporters representing a significant proportion of exports of the subject merchandise, extend that 4-month period to not more than 6 months.'' In these SS Bar investigations, January 29, 2002, is 6 months from the date of publication of the *SS Bar Preliminary Determinations.* Furthermore, section 737 of the Act states that definitive duties are to begin on the date of publication of the ITC's final injury determination, March 8, 2002. Accordingly, except as otherwise noted below, the *SS Bar AD Orders* are amended to state that:

These antidumping duties will be assessed on all unliquidated entries of stainless steel bar from France, Germany, Italy, Korea, and the United Kingdom entered, or withdrawn from warehouse, for consumption on or after August 2, 2001, the date of the publication of the *SS Bar Preliminary Determinations* in the **Federal Register**. In accordance with section 733(d) of the Act, we will instruct the BCBP to terminate the suspension of liquidation and to liquidate, without regard to antidumping duties, unliquidated entries of stainless steel bar from France, Germany, Italy, Korea and the United Kingdom entered, or withdrawn from warehouse, for consumption on or after January 29, 2002, through and including March 7, 2002. Suspension of liquidation will continue on or after March 8, 2002.

Any liquidation instructions issued to the BCBP will exclude entries that have been enjoined from liquidation. Therefore, instructions will not be issued covering enjoined entries of stainless steel bar from Italy and the United Kingdom, until either the conclusion of the ongoing litigation with respect to the final determination, pursuant to which these entries have been enjoined from liquidation, or the injunction in those cases are lifted or amended to allow liquidation of those entries. *See Slater Steels Corp.* v. *United States,* Consol. Court. No. 02–00189; *Corus Engineering Steels Ltd.* v. *United States,* Court No. 02–00283.

This notice constitutes the amended antidumping duty order with respect to stainless steel bar from France, Germany, Italy, Korea, and the United Kingdom, pursuant to section 736(a) of the Act. Interested parties may contact the Department's CRU for copies of an updated list of antidumping duty orders currently in effect.

This amended order is published in accordance with section 736(a) of the Act and 19 CFR 351.211.

Dated: October 3, 2003.

James J. Jochum,

Assistant Secretary for Import Administration.

[FR Doc. 03–25772 Filed 10–9–03; 8:45 am]

BILLING CODE 3510–DS–P

DEPARTMENT OF COMMERCE

International Trade Administration

[A–412–822]

Stainless Steel Bar From the United Kingdom: Notice of Extension of Time Limit for Preliminary Results in Antidumping Duty Administrative Review

AGENCY: Import Administration, International Trade Administration, Department of Commerce.

EFFECTIVE DATE: October 10, 2003.

FOR FURTHER INFORMATION CONTACT: Kate Johnson at (202) 482–4929, or Rebecca Trainor at (202) 482–4007, Office 2, AD/CVD Enforcement Group I, Import Administration, International Trade Administration, U.S. Department of Commerce, 14th Street and Constitution Avenue, NW., Washington, DC 20230.

SUMMARY: The Department of Commerce is extending the time limit for the preliminary results of the first administrative review of the antidumping duty order on stainless steel bar from the United Kingdom, which covers the period August 2, 2001, through February 28, 2003.

SUPPLEMENTARY INFORMATION: Pursuant to section 751(a)(3)(A) of the Tariff Act of 1930, as amended (''the Act''), the Department shall make a preliminary determination in an administrative review of an antidumping duty order within 245 days after the last day of the anniversary month of the date of publication of the order. The Act further provides, however, that the Department may extend that 245-day period to 365 days if it determines it is not practicable to complete the review within the foregoing time period. The Department finds that it is not practicable to complete the preliminary results in the administrative review of stainless steel bar from the United Kingdom within the 245-day time period because, as a result of the progress of the case and necessary verification scheduling, the verification of the sole respondent in this review is scheduled to be conducted in mid-November, which will not allow sufficient time to complete the preliminary results by the scheduled deadline of December 1, 2003.

Therefore, in accordance with section 751(a)(3)(A) of the Act, the Department is extending the time for completion of the preliminary results of this review until March 30, 2004.

Dated: October 3, 2003.

Jeffrey May,

Deputy Assistant Secretary for Import Administration.

[FR Doc. 03–25774 Filed 10–9–03; 8:45 am]

BILLING CODE 3510–DS–P

DEPARTMENT OF COMMERCE

National Oceanic and Atmospheric Administration

[I.D. 092603A]

Incidental Take of Marine Mammals; Taking of Marine Mammals Incidental to Operation of a Low Frequency Sound Source by the North Pacific Acoustic Laboratory

AGENCY: National Marine Fisheries Service (NMFS), National Oceanic and Atmospheric Administration (NOAA), Commerce.

ACTION: Notice of issuance of a letter of authorization.

SUMMARY: In accordance with the Marine Mammal Protection Act (MMPA), as amended, notification is hereby given that a letter of authorization to take several species of marine mammals incidental to operation of a low frequency sound source by the North Pacific Acoustic Laboratory (NPAL) was issued on October 3, 2003, to the University of California San Diego, Scripps Institution of Oceanography (Scripps).

DATES: This letter of authorization is effective from October 3, 2003, through October 2, 2004.

ADDRESSES: The application and letter is available for review in the Office of Protected Resources, NMFS, 1315 East-West Highway, Silver Spring, MD 20910.

FOR FURTHER INFORMATION CONTACT: Kimberly Skrupky, NMFS, (301) 713–2322, ext 163.

SUPPLEMENTARY INFORMATION: Section 101(a)(5)(A) of the MMPA (16 U.S.C. 1361 *et seq.*) directs NMFS to allow, on request, the incidental, but not intentional, taking of small numbers of marine mammals by U.S. citizens who engage in a specified activity (other than commercial fishing) within a specified geographical region, if certain findings are made by NMFS and regulations are issued. Under the MMPA, the term ''taking'' means to harass, hunt, capture, or kill or to attempt to harass, hunt, capture or kill marine mammals.

Permission may be granted for periods up to 5 years if NMFS finds, after notification and opportunity for public comment, that the taking will have a negligible impact on the species or stock(s) of marine mammals and will not have an unmitigable adverse impact on the availability of the species or stock(s) for subsistence uses. In addition, NMFS must prescribe regulations that include permissible methods of taking and other means effecting the least practicable adverse impact on the species and its habitat and on the availability of the species for subsistence uses, paying particular attention to rookeries, mating grounds, and areas of similar significance. The regulations must include requirements pertaining to the monitoring and reporting of such taking. Regulations governing the taking incidental to operation of a low frequency sound source by NPAL, were published on August 17, 2001 (66 FR 43442), and remain in effect until September 17, 2006.

Issuance of the letter of authorization to Scripps is based on findings made in the preamble to the final rule that the total takings by this project would result in only small numbers (as the term is defined in 50 CFR 216.103) of marine mammals being taken. In addition, the resultant incidental harassment would have no more than a negligible impact on the affected marine mammal stocks or habitats and would not have an unmitigable adverse impact on Arctic subsistence uses of marine mammals. NMFS also finds that the applicant will meet the requirements contained in the implementing regulations and Letter of Authorization (LOA), including monitoring and reporting requirements. This LOA will be renewed annually based on a review of the activity, completion of monitoring requirements and receipt of reports required by the LOA.

Dated: October 3, 2003.

Laurie K. Allen,

Acting Office Director, Office of Protected Resources, National Marine Fisheries Service.

[FR Doc. 03–25818 Filed 10–9–03; 8:45 am]

BILLING CODE 3510–22–S

DEPARTMENT OF COMMERCE

National Oceanic and Atmospheric Administration

[I.D. 100603B]

Gulf of Mexico Fishery Management Council; Public Meeting

AGENCY: National Marine Fisheries Service (NMFS), National Oceanic and Atmospheric Administration (NOAA), Commerce.

ACTION: Notice of public meeting.

SUMMARY: The Gulf of Mexico Fishery Management Council will convene public meetings of the Reef Fish Advisory Panel (AP)and the Standing and Special Reef Fish Scientific and Statistical Committee (SSC) from October 28 through October 29, 2003.

DATES: The Council's Reef Fish AP and SSC will convene jointly at 1 p.m. on Tuesday, October 28, 2003, to receive presentations. The AP and SSC will hold separate meetings to discuss the issues and make recommendations beginning at 8:30 a.m. on Wednesday, October 29, 2003, and will conclude by 5 p.m.

ADDRESSES: The meetings will be held at the Hilton Tampa Airport Westshore Hotel, 2225 Lois Avenue, Tampa, FL; telephone: 813–877–6688.

Council address: Gulf of Mexico Fishery Management Council, 3018 U.S. Highway 301 North, Suite 1000, Tampa, FL 33619.

FOR FURTHER INFORMATION CONTACT: Mr. Steven Atran, Population Dynamics Statistician, the Gulf of Mexico Fishery Management Council, 3018 U.S. Highway 301 North, Suite 1000, Tampa, FL 33619; telephone 813–228–2815.

SUPPLEMENTARY INFORMATION: The AP and the SSC will convene to review a yellowtail snapper stock assessment and a revised Reef Fish Secretarial Amendment 1 (red grouper rebuilding plan).

A yellowtail snapper stock assessment was prepared by the Florida Marine Research Institute (FMRI) on behalf of the Florida Fish and Wildlife Conservation Commission, the Gulf of Mexico Fishery Management Council, and the South Atlantic Fishery Management Council. The assessment was conducted using a process known as Southeast Data Assessment and Review (SEDAR). Under this process, a SEDAR Data Workshop was held on March 3–7, 2003, to bring researchers, managers, fishermen and environmental organization representatives together to review the available scientific information on yellowtail snapper, goliath grouper and vermilion snapper. A SEDAR Assessment Workshop was then held on June 9–13, 2003, to again bring researchers, managers, fishermen and environmental representatives together to conduct the actual assessment. A draft stock assessment from that workshop was presented to a SEDAR Assessment Review Workshop held in Tampa July 28–31, 2003. The review workshop, in addition to convening researchers, managers, fishermen and environmental organization representatives, also included several assessment experts

from outside of the Gulf region, including two provided by the University of Miami's Center for Independent Experts. Based on the results of the Assessment Review Workshop, a final version of the yellowtail snapper stock assessment was prepared, along with recommendations of the Assessment Review Workshop on the status of the stock and selection of status determination criteria (maximum fishing mortality rate, minimum stock size threshold, and optimum yield). These recommendations were presented to the Gulf Council's Socioeconomic Panel on September 10–12, 2003. The yellowtail snapper stock assessment, recommendations of the SEDAR Assessment Review Panel, and Socioeconomic Panel will be presented during the joint AP/SSC session on October 28, 2003. Afterwards, the AP and SSC will meet separately on October 29, 2003, to discuss the issues and make recommendations to the Gulf Council.

Red grouper were declared overfished by NMFS in October 2000, based on a 1999 assessment plus additional analyses conducted in 2000. A 2002 stock assessment by NMFS found that the red grouper stock was back above its minimum stock size threshold, but it had been below the threshold in 1999, confirming the need for a rebuilding plan to restore the stock to a level capable of producing maximum sustainable yield on a continuing basis. In May 2003, the Council submitted Reef Fish Secretarial Amendment 1 to NMFS that called for approximately a 10 percent reduction in harvest, to be achieved through a reduction in the commercial shallow-water grouper quota, replacing the February 15 to March 15 commercial closed season on gag, red and black grouper with a shallow-water grouper trip limit, and a recreational bag limit of no more than two red grouper (out of the 5 aggregate grouper bag limit). The rebuilding plan also proposed a reduction in the deep-water grouper quota and setting of a tilefish quota in order to discourage effort shifting to those stocks. NMFS has reviewed the plan as submitted by the Gulf Council and has made revisions to it. These revisions will be presented during the joint AP/SSC session on October 28, 2003. The AP and SSC will then meet separately on October 29, 2003, to discuss the issues and make recommendations to the Gulf Council.

Although other non-emergency issues not on the agenda may come before the AP/SSC for discussion, in accordance with the Magnuson-Stevens Fishery Conservation and Management Act, those issues may not be the subject of formal action during these meetings. Actions of the AP/SSC will be restricted to those issues specifically identified in the agendas and any issues arising after publication of this notice that require emergency action under Section 305(c) of the Magnuson-Stevens Act, provided the public has been notified of the Council's intent to take action to address the emergency.

Special Accommodations

Copies of the agendas of these meetings and the stock assessments can be obtained by calling the Council office at 813–228–2815 (toll-free 888–833–1844). Additional materials, including the Reef Fish Stock Assessment Panel report and the Socioeconomic Panel (SEP) report, can also be obtained from the Council office or downloaded from the Council website (*http://www.gulfcouncil.org*) but the SEP report may not be available until just prior to the meetings. This meeting is physically accessible to people with disabilities. Requests for sign language interpretation or other auxiliary aids should be directed to Anne Alford at the Council (see **ADDRESSES**) by October 17, 2003.

Dated: October 06, 2003.

Richard W. Surdi,

Acting Director, Office of Sustainable Fisheries, National Marine Fisheries Service.

[FR Doc. 03–25819 Filed 10–9–03; 8:45 am]

BILLING CODE 3510–22–S

DEPARTMENT OF COMMERCE

National Oceanic and Atmospheric Administration

[I.D. 100603G]

Gulf of Mexico Fishery Management Council; Public Meeting

AGENCY: National Marine Fisheries Service (NMFS), National Oceanic and Atmospheric Administration (NOAA), Commerce.

ACTION: Notice of public meeting.

SUMMARY: The Gulf of Mexico Fishery Management Council will convene a public meeting of the Special Coral Scientific and Statistical Committee (SSC) on October 27 and 28, 2003.

DATES: The Council's Coral SSC will convene at 1:30 p.m. on Monday, October 27, 2003 and conclude by 5 p.m. on Tuesday, October 28, 2003.

ADDRESSES: The meetings will be held at the Hilton Tampa Airport Westshore Hotel, 2225 Lois Avenue, Tampa, FL; telephone: 813–877–6688.

Council address: Gulf of Mexico Fishery Management Council, 3018 U.S. Highway 301 North, Suite 1000, Tampa, FL 33619.

FOR FURTHER INFORMATION CONTACT: Dr. Richard Leard, Senior Fishery Biologist, Gulf of Mexico Fishery Management Council; telephone: 813–228–2815.

SUPPLEMENTARY INFORMATION: The SSC will convene to discuss the current status and trends with coral reef resources in the Gulf of Mexico, and issues that concern the health of coral reefs. Some of the issues to be discussed include: diseases, oceanographic phenomena, global climate change, human interactions, and marine reserves. The Coral SSC will also consider funding priorities for future coral research projects and develop any recommendations for the Council.

Although non-emergency issues not contained in the agenda may come before the Coral SSC for discussion, in accordance with the Magnuson-Stevens Fishery Conservation and Management Act (MSFCMA), those issues may not be the subject of formal action during this meeting. The Coral SSC actions will be restricted to those issues specifically identified in this notice and any issues arising after publication of this notice that require emergency action under Section 305 (c) of the MSFCMA, provided the public has been notified of the Council's intent to take final action to address the emergency.

Copies of the agendas of these meetings and the stock assessments can be obtained by calling the Council office at 813–228–2815 (toll-free 888–833–1844).

Special Accommodations

This meeting is physically accessible to people with disabilities. Requests for sign language interpretation or other auxiliary aids should be directed to Anne Alford at the Council (see **ADDRESSES**) by October 20, 2003.

Dated: October 7, 2003.

Peter H. Fricke,

Acting Director, Office of Sustainable Fisheries, National Marine Fisheries Service.

[FR Doc. 03–25820 Filed 10–9–03; 8:45 am]

BILLING CODE 3510–22–S

DEPARTMENT OF COMMERCE

National Oceanic and Atmospheric Administration

[I.D 090903B]

Marine Mammals; File No. 782–1702

AGENCY: National Marine Fisheries Service (NMFS), National Oceanic and Atmospheric Administration (NOAA), Commerce.

ACTION: Issuance of permit.

SUMMARY: Notice is hereby given that National Marine Mammal Laboratory, National Marine Fisheries Service, NAA, 7600 Sand Point Way, NE, BIN C15700, Bldg. 1, Seattle, WA 98115–0070, (Dr. Sue Moore, Principal Investigator), has been issued a permit to take California sea lions (*Zalophus californianus*), harbor seals (*Phoca vitulina*), and northern elephant seals (*Mirounga angustirostris*) in California, Washington and Oregon for purposes of scientific research. Samples may be imported/export from/to Canada for analysis under this Permit or Permit No. 782–1694.

ADDRESSES: The permit and related documents are available for review upon written request or by appointment in the following office(s):

Permits, Conservation and Education Division, Office of Protected Resources, NMFS, 1315 East-West Highway, Room 13705, Silver Spring, MD 20910; phone (301)713–2289; fax (301)713–0376; and

Northwest Region, NMFS, 7600 Sand Point Way NE, BIN C15700, Bldg. 1, Seattle, WA 98115–0700; phone (206)526–6150; fax (206)526–6426; and

Alaska Region, NMFS, P.O. Box 21668, Juneau, AK 99802–1668; phone (907)586–7221; fax (907)586–7249.

FOR FURTHER INFORMATION CONTACT: Ruth Johnson or Amy Sloan (301)713–2289.

SUPPLEMENTARY INFORMATION: On June 4, 2003, notice was published in the **Federal Register** (68 FR 33477) that a request for a scientific research permit to take the species identified above had been submitted by the above-named organization]. The requested permit has been issued under the authority of the Marine Mammal Protection Act of 1972, as amended (16 U.S.C. 1361 *et seq.*), and the Regulations Governing the Taking and Importing of Marine Mammals (50 CFR part 216).

The purposes of the authorized research to conduct aerial, ground, and vessel surveys annually for stock assessment of harbor seals, California sea lions, and northern elephant seals. Harbor seals, California sea lions, and northern elephant seals will be captured, tagged, and branded for long-term identification of individuals and information on reproductive success, survival and longevity; blood sampling for disease screening; blubber biopsy for contaminant analysis; tissue sampling for genetics and for fatty acid analysis; some seals will be instrumented with VHF radio transmitters and/or Time-Depth Recorders (TDR) or satellite tags or sonic tags to document movements, activity and foraging patterns. In addition, harbor seals will be blood and biopsy sampled for contaminant analysis and tissue sampled for genetic analysis. Harbor seals and California sea lions will be instrumented with VHF radio transmitters and/or time-depth recorders or satellite tags to document movements activity and foraging patterns.

Dated: September 16, 2003.

Stephen L. Leathery,

Chief, Permits, Conservation and Education Division, Office of Protected Resources, National Marine Fisheries Service.

[FR Doc. 03–25821 Filed 10–9–03; 8:45 am]

BILLING CODE 3510–22–S

DEPARTMENT OF DEFENSE

Department of the Air Force

Air University Board of Visitors; Notice of Meeting

The Air University Board of Visitors will hold an open meeting on 16–19 November 2003. The first business session of each meeting will begin in the Air University Commander's Conference Room at Headquarters Air University, Maxwell Air Force Base, Alabama (5 seats available). The purpose of the meeting is to give the board an opportunity to review Air University educational programs and to present to the Commander, a report of their findings and recommendations concerning these programs.

For further information on this meeting, contact Dr. Dorothy Reed, Chief of Academic Affairs, Air University Headquarters, Maxwell Air Force Base, Alabama 36112–6335, telephone (334) 953–5159.

Pamela D. Fitzgerald,

Air Force Federal Register Liaison Officer.

[FR Doc. 03–25770 Filed 10–9–03; 8:45 am]

BILLING CODE 5001–05–P

DEPARTMENT OF DEFENSE

Department of the Air Force

HQ USAF Scientific Advisory Board

AGENCY: Department of the Air Force, DoD.

ACTION: Notice of meeting.

SUMMARY: Pursuant to Public Law 92–463, notice is hereby given of the forthcoming meeting of the 2003 Science and Technology Review. The purpose of the meeting is to allow the SAB leadership to assess the quality and long-term relevance of AFRL Materials research. Because classified and contractor-proprietary information will be discussed, this meeting will be closed to the public.

DATES: October 27–31, 2003.

ADDRESSES: Wright-Patterson Air Force Base, OH.

FOR FURTHER INFORMATION CONTACT: Major Dwight Pavek, Air Force Scientific Advisory Board Secretariat, 1180 Air Force Pentagon, Rm 5D982, Washington DC 20330–1180, (703) 697–4811.

Pamela D. Fitzgerald,

Air Force Federal Register Liaison Officer.

[FR Doc. 03–25766 Filed 10–9–03; 8:45 am]

BILLING CODE 5001–05–P

DEPARTMENT OF DEFENSE

Department of the Air Force

HQ USAF Scientific Advisory Board

AGENCY: Department of the Air Force, DoD.

ACTION: Notice of meeting.

SUMMARY: Pursuant to Public Law 92–463, notice is hereby given of the forthcoming meeting of the 2003 Science and Technology Review. The purpose of the meeting is to allow the SAB leadership to assess the quality and long-term relevance on Human Effectiveness research. Because classified and contractor-proprietary information will be discussed, this meeting will be closed to the public.

DATES: October 20–24, 2003.

ADDRESSES: Wright-Patterson Air Force Base, OH.

FOR FURTHER INFORMATION CONTACT: Major Dwight Pavek, Air Force Scientific Advisory Board Secretariat, 1180 Air Force Pentagon, Rm 5D982, Washington DC 20330–1180, (703) 697–4811.

Pamela D. Fitzgerald,

Air Force Federal Register Liaison Officer.

[FR Doc. 03–25767 Filed 10–9–03; 8:45 am]

BILLING CODE 5001–05–P

DEPARTMENT OF DEFENSE

Department of the Air Force

HQ USAF Scientific Advisory Board

AGENCY: Department of the Air Force, DoD.

ACTION: Notice of meeting.

SUMMARY: Pursuant to Public Law 92–463, notice is hereby given of the forthcoming meeting of the 2003

Science and Technology Review. The purpose of the meeting is to allow the SAB and study leadership to assess the quality and long-term relevance of Information Technology research. Because classified and contractor-proprietary information will be discussed, this meeting will be closed to the public.

DATES: November 17–21, 2003.

ADDRESSES: Rome, NY.

FOR FURTHER INFORMATION CONTACT: Major Dwight Pavek, Air Force Scientific Advisory Board Secretariat, 1180 Air Force Pentagon, Rm 5D982, Washington DC 20330–1180, (703) 697–4811.

Pamela D. Fitzgerald,

Air Force Federal Register Liaison Officer.

[FR Doc. 03–25768 Filed 10–9–03; 8:45 am]

BILLING CODE 5001–05–P

DEPARTMENT OF DEFENSE

Department of the Air Force

HQ USAF Scientific Advisory Board

AGENCY: Department of the Air Force, DoD.

ACTION: Notice of meeting.

SUMMARY: Pursuant to Public Law 92–463, notice is hereby given of the forthcoming meeting of the 2003 Science and Technology Review. The purpose of the meeting is to allow the SAB leadership to assess the quality and long-term relevance of AFRL Munitions research. Because classified and contractor-proprietary information will be discussed, this meeting will be closed to the public.

DATES: October 14–17, 2003.

ADDRESSES: 101 W. Eglin Blvd., STE 230, Eglin Air Force Base, FL.

FOR FURTHER INFORMATION CONTACT: Major Dwight Pavek, Air Force Scientific Advisory Board Secretariat, 1180 Air Force Pentagon, Rm 5D982, Washington, DC 20330–1180, (703) 697–4811.

Pamela D. Fitzgerald,

Air Force Federal Register Liaison Officer.

[FR Doc. 03–25769 Filed 10–9–03; 8:45 am]

BILLING CODE 5001–05–P

DEPARTMENT OF DEFENSE

Department of the Army

Prospective Grant of Exclusive Patent License

AGENCY: Department of the Army, DoD.

ACTION: Notice.

SUMMARY: In accordance with 35 U.S.C. 209 and 37 CFR 404.7, U.S. Army Soldier and Biological Chemical Command (SBCCOM) hereby gives notice that it is contemplating the grant of an exclusive license in the United States to practice the below referenced inventions owned by the U.S. Government to Genencor International Inc., a Delaware Corporation with principal offices at 200 Meridian Center Blvd., Rochester, New York 14612.

FOR FURTHER INFORMATION CONTACT: Mr. John Biffoni, Intellectual Property Attorney, U.S. Army Soldier and Biological Chemical Command, ATTN: AMSSB–CC (Bldg E4435), Aberdeen Proving Ground, MD 21010–5424, Phone: (410) 436–1158; Fax: 410–436–2534 or e-mail: *John.Biffoni@sbccom.apgea.army.mil*.

SUPPLEMENTARY INFORMATION: The prospective exclusive license may be granted, unless SBCCOM receives written evidence and argument to establish that the grant of the license would not be consistent with the requirements of 35 U.S.C. 209 and 37 CFR 404.7 on or before October 27, 2003. The following Patent Numbers, Titles and Issue dates are provided:

1. *Title:* ''Enzymatic Detoxification of Organophosphorus Compounds''.

Description: The present invention relates to the expression of a recombinant bacterial enzyme which is useful for detoxifying cholinesterase-inhibiting organophosphorus compounds such as pesticides and chemical nerve agents and the decontamination of substances contaminated with these compounds.

Patent Number: 5,928,927.

Issue Date: July 27, 1999.

2. *Title:* ''One-step Purification Process for Organophosphorus Hydrolase Enzyme''.

Description: The present invention relates to an improved and simplified process for purifying organophosphorus hydrolase enzyme (''OPH'') from a recombinant host cell, that expresses this enzyme.

Patent Number: 6,469,145.

Issue Date: October 22, 2002.

3. *Title:* ''Enzymatic Detoxification of Organophosphorus Compounds''.

Description: The present invention relates to the expression of a recombinant bacterial enzyme which is useful for detoxifying cholinesterase-inhibiting organophosphorus compounds such as pesticides and chemical nerve agents and the decontamination of substances contaminated with these compounds.

Patent Number: 6,080,566.

Issue Date: June 27, 2000.

Luz D. Ortiz,

Army Federal Register Liaison Officer.

[FR Doc. 03–25760 Filed 10–9–03; 8:45 am]

BILLING CODE 3710–08–M

DEPARTMENT OF DEFENSE

Department of the Army; Corps of Engineers

Intent To Prepare a Combined Draft Environmental Impact Statement for the Following Three Aquifer Storage and Recovery Pilot Projects: Caloosahatchee River Aquifer Storage and Recovery Pilot Project Located Southwest of La Belle on the Berry Groves Property, Hendry County, Florida; Hillsboro Aquifer Storage and Recovery Pilot Project Adjacent to the Hillsboro Canal, Palm Beach Country, FL; and Lake Okeechobee Aquifer Storage and Recovery Pilot Project at Three Locations Adjacent to Lake Okeechobee, with Components in Martin, Okeechobee, and Glades County, FL

AGENCY: Department of the Army, U.S. Army Corps of Engineers, DoD.

ACTION: Notice of intent.

SUMMARY: The Jacksonville District, U.S. Army Corps of Engineers (Corps), intends to prepare a combined Draft Environmental Impact Statement (DEIS) for three Aquifer Storage and Recovery (ASR) pilot projects. Notices of intent (NOI) for each of these projects were previously published separately in the **Federal Register**: (1) The Lake Okeechobee ASR Pilot NOI was published July 19, 2002 (67 FR 47527); (2) The Hillsboro ASR Pilot NOI was published May 31, 2002 (67 FR 38077); (3) The Calosahatchee ASR Pilot NOI was published March 28, 2003 (68 FR 15157). Given their similarities and shared objective(s), it was decided to combine these projects into one DEIS. These three projects will consider the same alternatives—each testing separate technologies in order to obtain data on the feasibility and success of each alternative. These pilot studies are a cooperative effort between the Corps and the South Florida Water Management District (SFWMD), which is also a cooperating agency for this DEIS. For additional information on these projects please see the previously published NOIs for each pilot.

FOR FURTHER INFORMATION CONTACT: Ms. Susan Conner, U.S. Army Corps of Engineers, Planning Division, Environmental Branch, P.O. Box 4970,

Jacksonville, FL 32232–0019, or by telephone at 904–232–1782.

SUPPLEMENTARY INFORMATION:

a. For information concerning authorization, project scope, preliminary alternatives, issues, scoping, coordination, agency role, and other environmental review and consultation please refer to the previously published NOIs for each project, cited above.

b. *Public Involvement:* We invite the participation of affected Federal, state and local agencies, affected Indian tribes, and other interested private organizations and parties.

c. *DEIS Preparation:* The combined DEIS for the three pilot projects is currently estimated for publication in December 2003.

Dated: October 1, 2003.

James C. Duck,

Chief, Planning Division.

[FR Doc. 03–25761 Filed 10–9–03; 8:45 am]

BILLING CODE 3710–AJ–M

DEPARTMENT OF DEFENSE

Department of the Army; Corps of Engineers

Intent to Prepare a Draft Environmental Impact Statement for Big Bear Lake ''Aquatic Ecosystem Restoration'', a Feasibility Study, Near Big Bear City, San Bernardino County, CA

AGENCY: U.S. Army Corps of Engineers, DoD.

ACTION: Notice of intent.

SUMMARY: The Environmental Impact Statement will address foreseeable environmental impacts from measures being investigated to include sediment removal, flood protection, watershed management, shoreline restoration and habitat restoration at Big Bear Lake, San Bernardino County, CA, will commence. U.S. Army Corps of Engineers and Big Bear Municipal Water District will cooperate in conducting this feasibility study. U.S. Army Corps of Engineers is the lead Federal Agency for this study.

The Big Bear feasibility study will be conducted over the next several years following a planning process that will include public involvement during each of the study phases. The Study may result in a report recommending that Congress authorize a project for implementation by the Corps of Engineers, or that measures could be implemented by another agency to address the problems and needs of the study area. A range of conceptual alternatives were identified, as having a potential for Federal interest, to address the problems and needs of the study area, to include (1) Sediment removal to improve aquatic habitat and public access; (2) Beneficial uses of sediment, including island construction; (3) increased flood protection; (4) Improved watershed management practices to reduce nutrient loading of Big Bear Lake; (5) Shoreline restoration and Stanfield Marsh enhancements; (6) Protecting sensitive and endangered species.

No alternatives have been advanced as yet, so contents of the Draft Environmental Impact Statement (DEIS) remain to be determined during the public scoping process. The portion of this study area includes Big Bear Lake, and 200 feet upgradient of the shoreline, 6 major tributaries and 50 feet either side of said tributaries. Big Bear Municipal Water District has identified, within this watershed, needs associated with loss of wildlife habitat and changes in the ecosystem of the lake. Lake water levels, caused by a multi-year drought, and siltation of the lake have caused changes in the water chemistry and temperature. Those ecological concerns will guide the formulation of plans for this segment of the watershed.

DATES: A scoping meeting will be held October 14, 2003, from 6 p.m. to 8 p.m., at Big Bear Lake Civic Center, located at 39707 Big Bear Boulevard, Big Bear Lake, CA. The scoping period will conclude November 24, 2003. Comments, concerning this notice, should be submitted to the address listed below by November 24, 2003.

ADDRESSES: District Engineer, U.S. Army Corps of Engineers, Los Angeles District, ATTN: CESPL–PD–RP, P.O. Box 532711, Los Angeles, CA 90053–2325.

FOR FURTHER INFORMATION CONTACT: Mr. Timothy Kennedy, Environmental Coordinator, telephone (213) 452–9878, or Mrs. Deborah Lamb, Study Manager, telephone (213) 452–3798. The cooperating entity, Big Bear Municipal Water District, requests inquiries to Ms. Sheila Hamilton, General Manager, telephone (909) 866–5796, for any additional information.

SUPPLEMENTARY INFORMATION:

1. Authorization

This study is being conducted in accordance with the study resolution adopted by the committee on Public Works, House of Representatives, adopted May 8, 1964, authorizing the study of the Santa Ana River Basin and Orange County Streams (SARBOC), CA. In addition, specific directive language was provided by Congress within the Energy and Water Development Appropriations Bill, 2002, which reads as follows: ''Santa Ana River and Tributaries, Big Bear Lake, CA—The bill includes $100,000 for the Corps of Engineers to undertake a reconnaissance study of environmental restoration, water quality and related issues at Big Bear Lake, CA.'' Funds in the amount of $100,000 were appropriated in Fiscal Year 2002 to conduct the reconnaissance phase of the study, under the title Santa Ana River and Tributaries, Big Bear Lake, CA.

2. Background

Waters of Big Bear Creek originate in adjacent mountains to the north and south of Big Bear Lake. Big Bear Lake drains to the west into Big Bear Creek, then turns southwestward and becomes part of the Santa Ana River watershed. Since before the late 16th century when the Spanish explored the southwest, the river ran continuously all the way to the Pacific Ocean. Where underlying bedrock along its course forced water to the surface, Big Bear Creek was perennial. Historically, reliable surface flows along the river could be found intermittently in Big Bear Valley, to southeastern parts of what is now metropolitan Los Angeles. Subsurface flow, within Big Bear Valley, sustained a riparian community in and around Big Bear Lake, historically a natural lake, before it was dammed in 1884. Year-round water supplied the needs of Big Bear. In 1912 a more modern, and taller, dam was constructed 100 yards down stream from the original 1884 dam. This changed the water impoundment from 25,280 acre feet to more than 73,000 acre feet.

This DEIS will evaluate: (1) Sediment removal to improve aquatic habitat and public access; (2) Beneficial uses of sediment, including island construction; (3) increased flood protection; (4) Improved watershed management practices to reduce nutrient loading of Big Bear Lake; (5) Shoreline restoration and Stanfield Marsh enhancements; (6) Protecting sensitive and endangered species.

Prehistoric and historic cultural resources may be found along this stretch of the lake basin. The study team will comply with all applicable consultation rules as set forth in National Historic Preservation Act. Federally protected species and critical habitat will be considered.

3. Proposed Action

No plan of action has yet been identified.

4. Alternatives

a—No Action: No improvement or reinforcement of existing banks or uplands to stabilize for sedimentation.

b—Proposed Alternative Plans: None have been formulated to date.

5. Scoping Process

Participation of all interested Federal, State and County resource agencies, as well as Native American peoples, groups with environmental interests, and all interested individuals are encouraged. Public involvement will be most beneficial and worthwhile in identifying pertinent environmental issues, offering useful information such as published or unpublished data, direct personal experience or knowledge which inform decision making, assistance in defining the scope of plans which ought to be considered, and recommending suitable mitigation measures warranted by such plans. Those wishing to contribute information, ideas, alternatives for actions, and so forth can furnish these contributions in writing to the points of contacts indicated above, or by attending public scoping opportunities.

The scoping period will conclude 45 days after publication of this notice and simultaneous publication in newspapers circulated in the Big Bear Lake area (see **DATES**).

When plans have been devised, and alternatives formulated to embody those plans, potential impacts will be evaluated in the DEIS. These assessments will emphasize at least fourteen categories of resources: land use, impromptu historic landfills, hazardous wastes, physical environment, hydrology, groundwater, biological, archaeological, geological, air quality, noise, transportation, socioeconomic, and safety.

Luz D. Ortiz,

Army Federal Register Liaison Officer.

[FR Doc. 03–25759 Filed 10–9–03; 8:45 am]

BILLING CODE 3710–KF–M

ENVIRONMENTAL PROTECTION AGENCY

[ER–FRL–6644–5)

Environmental Impact Statements and Regulations; Availability of EPA Comments

Availability of EPA comments prepared pursuant to the Environmental Review Process (ERP), under Section 309 of the Clean Air Act and Section 102(2)(c) of the National Environmental Policy Act as amended. Requests for copies of EPA comments can be directed to the Office of Federal Activities at (202) 564–7167. An explanation of the ratings assigned to draft environmental impact statements (EISs) was published in **Federal Register** dated April 04, 2003 (68 FR 16511).

Draft EISs

ERP No. D–AFS–F65041–MN Rating EC2, Chippewa and Superior National Forests Land and Resource Management Plans Revision, Implementation, Beltrami, Cass, Itasca, Cook, Lake and St. Louis Counties, MN.

Summary: EPA expressed environmental concerns regarding the management of watersheds, deer populations and invasive species. EPA recommended that the final EIS consider a preferred alternative that is a hybrid of those that were described in the Draft EIS.

ERP No. D–AFS–G65088–NM Rating LO, Bluewater Ecosystem Management Project, Proposal to Initiate Vegetation Treatments to Restore Ponderosa Pine and Pinon-Juniper Stands to a Desired Condition, Cibola National Forest, Mt. Taylor Ranger District, McKinley and Cibola Counties, NM.

Summary: EPA expressed a lack of objections to the selection of the preferred alternative.

ERP No. D–AFS–K26002–CA Rating LO, South Tahoe Public Utility District (STPUD) B-Line Phase III Wastewater Export Pipeline Replacement Project, Luther Pass Pump Station to U.S. Forest Service Luther Pass Overflow Campground Access Road, Special Use Permit, U.S. Army COE Section 404 and U.S. Fish and Wildlife Service Permits Issuance and EPA Grant, El Dorado and Alpine Counties, CA.

Summary: EPA expressed a lack of objections.

ERP No. D–BLM–L65418–OR Rating EC2, Travis Tyrrell Seed Orchard Integrated Pest Management (IPM) Program, Implementation, Eugene District, Lorne, Lane County, OR.

Summary: EPA expressed environmental concerns and recommends that the final EIS discuss pesticide safety issues, additional IPM methodologies, and the relevancy of a concurrent BLM Draft Supplemental EIS (Management of Port-Orford-Cedar by Southwest Oregon) which BLM is working on that may impact proposed activities for the four seeds orchards. EPA also recommends that the final EIS discuss how the Washington Toxics Coalition, *et al.* vs U.S. EPA decision may affect the range of alternatives.

ERP No. D–BLM–L65425–OR Rating EC2, Provolt Seed Orchard Integrated Pest Management (IPM) Program, Implementation, Grants Pass, Medford District, Jackson and Josephine Counties, OR and Charles A. Sprague Seed Orchard Integrated Pest Management Program (IMP), Implementation, Merlin, Medford District, Josephine County, OR.

Summary: EPA expressed environmental concerns and recommends that the Final EIS should discuss pesticide safety and additional IPM methodologies. Also, the Final EIS should discuss management actions that may be taken under the concurrent BLM Draft Supplemental EIS, Management of Port-Orford-Cedar, their potential impact on proposed activities for the four seed orchards.

ERP No. D–BLM–L65426–OR Rating EC2, Walter H. Horning Seed Orchard Integrated Pest Management Program (IPM), Implementation, Colton, Salem District, Clackamas County, OR.

Summary: EPA expressed environmental concerns and recommends that the final EIS discuss pesticide safety issues, additional IPM methodologies, and the relevancy of a concurrent BLM Draft Supplemental EIS (Management of Port-Orford-Cedar by Southwest Oregon) which BLM is working on that may impact proposed activities for the four seed orchards. EPA also recommends that the final EIS discuss how the Washington Toxics Coalition, *et. al.* vs U.S. EPA decision may affect the range of alternatives.

ERP No. D–FRC–C05148–NY Rating LO, St. Lawrence-FDR Hydroelectric Project, Application for New License (Relicense), (FERC No. 200–036), Located on the St. Lawrence River, Messina, NY.

Summary: EPA does not believe that the proposed project would result in significant adverse impacts to the environmental and cultural resources and has no objections to its implementation.

ERP No. D–IBR–K39079–CA Rating EC2, Programmatic EIS—Environmental Water Account Project, Water Management Strategy to Protect the At-Risk Native Delta-Dependent Fish Species and Water Supply Improvements, U.S. Fish and Wildlife Service Endangered Species Act Section 7 and US Army Corps Section 10 Permits Issuance, CA.

Summary: EPA expressed environmental concern that the water project operations could reduce water quality. In addition the Draft EIS does not capture current evaluations regarding potential uses of the EWA and redefinition of EWA assets in conjunction with other proposed CALFED projects, such as South Delta Improvements. EPA recommended that

the Final EIS provide additional and updated information on water quality and provide scientific validation of EWA actions intended to provide fisheries protection and enhancement.

ERP No. D–NPS–C80015–00 Rating LO, Ellis Island and Statue of Liberty National Monument Development Concept Plan, Long-Term Rehabilitation and Reuse for Historic Buildings, Implementation, New York Harbor, NY and NJ.

Summary: EPA has no objections with the proposed management plan for Eills Island.

ERP No. D–NPS–K65257–AZ Rating LO, Coronado National Memorial General Management Plan, Implementation, Cochise County, AZ.

Summary: EPA expressed a lack of objections to this project.

ERP No. D–NRC–C06014–NY Rating LO, Generic—License Renewal for R.E. Ginna Nuclear Power Plant, Supplement 14, NUREG–1437, Implementation, Wayne County, NY.

Summary: EPA has no objection to NRC retaining the option of renewing the Ginna Nuclear Power Plant operating license.

ERP No. D–NRS–G36165–OK Rating LO, Cavalry Creek Watershed Supplemental Plan for Floodwater Retarding Structure No. 6, Washita River Basin, Washita County, OK.

Summary: EPA has no objection to the selection of the preferred alternative.

ERP No. DS–AFS–K65226–00 Rating EO2, Sierra Nevada Forest Plan Amendment, New Information on a Range of Alternatives for Amending Land and Resource Management Plans, Modoc, Lasser, Plumas, Tahoe, Eldorado, Stanislaus, Sequoia, Sierra, Inyo and Humboldt-Toiyabe National Forests, and the Lake Tahoe Basin Management Unit, several counties, CA and NV.

Summary: EPA expressed environmental objections based on potential adverse impacts to water quality from the preferred alternative. Such actions include increased mechanical treatments, less prescriptive grazing in wet meadows and deferred action on roads issues. The FSEIS should fully disclose impacts to water quality and aquatic life from roads; avoidance and mitigation of these impacts and road system cost associated with alternative S2. The FSEIS should fully describe the scientific basis for current management direction, address inconsistencies in the alternatives analysis, and provide an implementation plan for the multi-agency body to collaborate on management issues begun under the previous ROD.

ERP No. DS–AFS–L65110–00 Rating EC2, Port-Orford-Cedar Management Plan, Implementation, Coos Bay, Medford, and Roseburg Bureau of Land Management Districts and the Siskiyou National Forest, Southwest Oregon.

Summary: EPA expressed environmental concerns with insufficient information and analysis provided for the potential impacts of using the resistant Port Orford Cedar stock at the landscape level and for adequate maintenance of uninfested stands.

Final EISs

ERP No. F–AFS–L61208–00, Hells Canyon National Recreation Area (HCNRA), Comprehensive Management Plan, Implementation, Wallowa-Whitman National Forest, Nez Perce and Payette National Forests, Bake and Wallowa Counties, OR and Nez Perce and Adam Counties, ID.

Summary: No formal comment letter was sent to the preparing agency.

ERP No. F–BLM–K65250–NV, Black Rock Desert-High Rock Canyon Emigrant Trails National Conservation Area (NCA) and Associated Wilderness and other Contiguous Lands Resource Management Plan, Implementation, Great Basin, NV.

Summary: EPA had no objections to this project.

ERP No. F–FRC–G03020–LA, Hackberry Liquified Natural Gas (LNG) Terminal and Natural Gas Pipeline Facilities, Construction and Operation, Cameron, Calcasieu, and Beauregard Parishes, La.

Summary: EPA had no further comments on the Final EIS. Region 6 is continuing to work with the Corps of Engineers to resolve the wetland delineation issue and will work toward resolution.

ERP No. F–FRC–K05058–CA, El Dorado Hydroelectric Project, Application for a New License, South Fork of the American River Basin and Truckee River Basin (FERC NO. 184–065), El Dorado National Forest, Lake Tahoe Basin Management Unit, Alpine, Amador and El Dorado Counties, CA.

Summary: EPA's previous concerns have been addressed, therefore, EPA has no objection to the action as proposed.

ERP No. F–NPS–E65060–NC, Carl Sandburg Home National Historic Site, General Management Plan, Implementation, Located in the Village of Flat Rock, Henderson County, NC.

Summary: EPA's review of the EIS did not identify any potential environmental impacts requiring substantive changes to the proposal.

ERP No. F–NRC–H06005–NB Generic EIS—Fort Calhoun Station, Unit 1, Renewal of the Operating Licenses (OLs) for an Additional 20 Years, Supplement 12 (NUREG–1437) Omaha Public Power District, Washington County, NB.

Summary: The FEIS adequately supplements information needs and addresses the concerns that EPA had expressed in the review of the DEIS for this project. Consequently, EPA has no objections.

Dated: October 07, 2003.

Joseph C. Montgomery,

Director, NEPA Compliance Division, Office of Federal Activities.

[FR Doc. 03–25810 Filed 10–9–03; 8:45 am]

BILLING CODE 6560–50–P

ENVIRONMENTAL PROTECTION AGENCY

[ER–FRL–6644–4]

Environmental Impact Statements; Notice of Availability

Responsible Agency: Office of Federal Activities, General Information (202) 564–7167 or *http://www.epa.gov/compliance/nepa/* Weekly receipt of Environmental Impact Statements Filed September 29, 2003 Through October 03, 2003 Pursuant to 40 CFR 1506.9.

EIS No. 230449, DRAFT EIS AFS, KY, Gray Mountain Coal Lease Land Use Analysis, Application for Leasing Tracts 3094Bb, 3049Be and 3049Az, Daniel Boone National Forest, Leslie County, KY, Comment Period Ends: November 24, 2003, Contact: Corey Miller (859) 745–3149.

EIS No. 230450, FINAL EIS, NPS, AK, Glacier Bay National Park and Preserve Vessel Quotas and Operating Requirements for Cruise Ships and Tour, Charter, and Private Vessels, Implementation, AK, Wait Period Ends: November 10, 2003, Contact: Nancy Swanton (907) 644–3696.

EIS No. 230451, FINAL EIS, BLM, CA, Headwaters Forest Reserve, Implementation Resource Management Plan, Long-Term Management Plan and Planning Framework, Located in the northwestern Coast Ranges near Humboldt Bay in Humboldt County, CA, Wait Period Ends: November 10, 2003, Contact: Lynda J. Roush (707) 825–2300.

EIS No. 230452, DRAFT EIS, FRC, CO, KS, Cheyenne Plains Pipeline Project, Natural Gas Transmission Pipeline, Construction and Operation, NPDES Permit and U.S. Army COE Section 404 Permit Issuance, several counties, CO and several counties, KS,

Comment Period Ends: November 24, 2003, Contact: Magalie R. Salas (202) 502–8659.

EIS No. 230453, DRAFT EIS, BLM, CA, Desert Southwest Transmission Line Project, New Substation/Switching Station, Construction, Operation and Maintenance, Right-of-Way Grant and US Army COE Section 10 and 404 Permits Issuance, North Palm Springs and Blythe, CA, Comment Period Ends: November 24, 2003, Contact: John Kalish (760) 251–4849. This document is available on the Internet at: *http://WWW.CA.BLM.GOV/Palmsprings*

EIS No. 230454, FINAL EIS, NOA, Atlantic Surfclam and Ocean Quahog Fishery Management Plan Amendment 13, Implementation, U.S. Exclusive Economic Zone along the Atlantic Seaboard from Maine through North Carolina, Wait Period Ends: November 10, 2003, Contact: George H. Darcy (978) 281–9210.

This document is available on the Internet at: *http://WWW.MAFMC.ORG/MID-ATLANTIC/Publication*

EIS No. 230455, DRAFT EIS, BLM, NV, Tracy to Silver Lake Transmission Line Project, Construction, Operation and Maintenance of a 120kV Transmission Line from Tracy Power Plant to New Substations in the Spanish Spring Valley and Stead Areas, Right-of-Way Application, Washoe County, NV, Comment Period Ends: December 08, 2003, Contact: Terri Knutson (775) 885–6156.

EIS No. 230456, FINAL EIS, AFS, ID, Upper and Lower East Fork Cattle and Horse Allotment Management Plans, Updating the Allotment Plans to Allow Permitted Livestock Grazing, National Forest System Lands, Sawtooth and Challis National Forests, Custer County, ID, Wait Period Ends: November 10, 2003, Contact: Kamerson Sam (208) 774–3000.

This document is available on the Internet at: *http://www.fs.fed.us/r4/sawtooth*

EIS No. 230457, FINAL EIS, AFS, WI, McCaslin Project, Vegetation Management Activities Consistent with Direction in the Nicolet Forest Plan, Lakewood/Laona District, Chequamegon-Nicolet National Forest, Oconto and Forest Counties, WI, Wait Period Ends: November 10, 2003, Contact: John Lampereur (715) 276–6333.

EIS No. 230458, DRAFT SUPPLEMENT, FTA, CA, Orange County Centerline Project, Transportation Improvements, Updated Information concerning Four New Alternatives and Re-examining an Updated New No Build Alternative, City of Santa Ana through the City of Costa Mesa to the City of Irvine, Funding, Orange County, CA, Comment Period Ends: November 24, 2003, Contact: Hymie Luden (415) 744–3115.

EIS No. 230459, DRAFT EIS, USN, CA, Tertiary Treatment Plant and Associated Facilities Construction and Operation, Implementation, Marine Corps Base Camp Pendleton, San Diego County, CA, Comment Period Ends: November 24, 2003, Contact: Lisa Seneca (619) 532–4744.

Amended Notices

EIS No. 230349, DRAFT EIS, NOA, PR, VI, Generic Essential Fish Habitat Amendment To: Spiny Lobster, Queen Conch, Reef Fish and Coral Fishery Management Plans, Implementation, U.S. Caribbean, extending to the U.S. Exclusive Economic Zone (EEZ), Virgin Islands and Puerto Rico, Comment Period Ends: November 3, 2003, Contact: David Dale (727) 570–5317. Revision of FR Notice Published on 8/1/2003: CEQ Comment Period Ending 10/30/2003 has been Revised to 11/3/2003.

EIS No. 230392, DRAFT SUPPLEMENT, NOA, AK, Programmatic EIS—Alaska Groundfish Fisheries, New Information concerning the Ecosystem and a Preferred Alternative, Fishery Management Plans for the Groundfish Fishery of the Gulf of Alaska and the Groundfish of the Bering Sea and Aleutian Islands Area, North Pacific Fishery Management Council, AK, Comment Period Ends: November 06, 2003, Contact: James W. Balsiger (907) 586–7221. Revision of FR Notice Published on 9/5/2003: CEQ Comment Period Ending 10/15/2003 has been Extended to 11/6/2003.

EIS No. 230393, DRAFT EIS, NOA, TX, MS, FL, LA, AL, Generic Essential Fish Habitat Amendment to the Fishery Management Plans of the Gulf of Mexico (GOM) for Shrimp, Red Drum, Reef Fish, Stone Crab, Coral and Coral Reef, Spiny Lobster Fisheries of the GOM and South Atlantic Coastal Migratory Pelagic Resources of the Gulf of Mexico and South Atlantic, Due: December 01, 2003, Contact: Roy E. Crabtree (727) 570–5301. Revision of FR Notice Published on 8/29/2003: CEQ Comment Period Ending 11/26/2003 which should have been 11/29/2003 has been Revised to 12/1/2003 and Title has been Corrected.

Dated: October 7, 2003.

Joseph C. Montgomery,

Director, NEPA Compliance Division, Office of Federal Activities.

[FR Doc. 03–25811 Filed 10–9–03; 8:45 am]

BILLING CODE 6560–50–U

ENVIRONMENTAL PROTECTION AGENCY

[FRL–7572–4]

Meeting of the Local Government Advisory Committee

AGENCY: Environmental Protection Agency (EPA).

ACTION: Notice.

SUMMARY: The Local Government Advisory Committee (LGAC) will meet on October 27–29, 2003 in Portland, OR. Topics to be considered include Water Conservation/Efficiency, the recently released draft Report on the Environment (ROE), an update report on Bartow County, Georgia environmental management systems project, and an overview of the Brownfields 2003 Conference and the impact of Brownfields activities in local communities. Work group and subcommittee discussions on urbanization issues, infrastructure principles, tax credits, lease purchase arrangements and CSO and SSO issues are also expected. The Committee also expects to have general discussions with other local government officials from the area who attend the Committee's sessions.

The Committee will hear comments from the public between 11:45 a.m.–12 p.m., October 28, 2003 . Each individual or organization wishing to address the LGAC meeting will be allowed a maximum of five minutes to present their point of view. Please contact the Designated Federal Officer (DFO) at the number listed below to schedule agenda time. Time will be allotted on a first come, first served basis, and the total period for comments may be extended, if the number of requests for appearances required it.

These are open meetings and all interested persons are invited to attend. LGAC meeting minutes and summary notes will be available after the meetings and can be obtained by written request from the DFO. Members of the public are requested to call the DFO at the number listed below if planning to attend so that arrangements can be made to comfortably accommodate attendees as much as possible. Seating will be on a first come, first served basis.

DATES: The Local Government Advisory Committee Plenary sessions will begin

at 8:30 a.m. Monday, October 27, 2003 and is expected to conclude at 1:30 p.m. on October 29, 2003.

ADDRESSES: The meetings will be held at the Oregon Convention Center, 777 N. E. Martin Luther King, Jr. Blvd in Portland, Oregon. Plenary sessions will be held in meeting rooms D131 and D132.

Additional information can be obtained by writing the DFO at 1200 Pennsylvania Avenue, NW. (1306A), Washington, DC 20460.

FOR FURTHER INFORMATION CONTACT: The DFO for the Local Government Advisory Committee (LGAC) is Paul Guthrie (202) 564–3649.

Dated: September 30, 2003.

Paul N. Guthrie,

Designated Federal Officer, Local Government Advisory Committee.

[FR Doc. 03–25808 Filed 10–9–03; 8:45 am]

BILLING CODE 6560–50–P

ENVIRONMENTAL PROTECTION AGENCY

[FRL–7572–3; OEI–2003–0034]

Privacy Act of 1974; Notice of System of Records

AGENCY: Environmental Protection Agency.

ACTION: Notice; amendment to Notice of Privacy Act System of Records EPA–1.

SUMMARY: The Environmental Protection Agency (EPA or Agency) is amending a Privacy Act system of records to reflect the agency's migration from its legacy Payroll and Personnel System (EPAYS) to PeoplePlus, a modern, commercial off the shelf system. PeoplePlus allows the agency to fully integrate its payroll and HR systems and supports the government-wide initiative led by the Office of Personnel Management (OPM) to consolidate executive branch payroll providers. This advance in technology paves the way for EPA to become a payroll customer of USDA's National Finance Center at the start of FY2005.

The PeoplePlus system consists of two separate applications. One application will perform HR functions, and the other will perform payroll, and time and labor functions. The records and routine uses of the information in the HR application remain covered by a government-wide notice published by OPM April 27, 2000 at 65 FR 24732. The EPA notice published today is a technical amendment to EPA's system of records to notify the public of the routine uses for the new payroll, time, and labor application. This notice does not affect any Privacy Act rights already accorded individuals who are the subject of agency payroll records. PeoplePlus will not change the nature of the records currently kept by EPA, and no new uses of information are proposed. This action simply gives notice that EPAYS is being replaced by PeoplePlus. The records are needed to administer EPA's pay and leave requirements, including processing, accounting and reporting requirements.

Today's notice rescinds the portions of EPA's notice published in the **Federal Register** February 22, 2002, at 67 FR 8246 that pertain to the legacy EPAYS system.

DATES: This notice is effective October 10, 2003.

FOR FURTHER INFORMATION CONTACT: Melvin Visnick, Chief, Washington Finance Center, Office of the Chief Financial Officer, U.S. Environmental Protection Agency, 1200 Pennsylvania Ave., NW., (MC 2734R), Washington, DC 20460, 202–564–4944.

Additional information about implementation of the Privacy Act at EPA is available on the Internet at *http://www.epa.gov/privacy/.*

SUPPLEMENTARY INFORMATION: EPA prepares and processes payroll for its employees and for employees of the Department of Transportation's Surface Transportation Board (STB). EPA's legacy Payroll and Personnel System (EPAYS) is more than 30 years old, and the Agency is replacing it with PeoplePlus, a modern, fully integrated human resources (HR), payroll, time and labor system. PeoplePlus will not be used to prepare and process payroll for STB.

Replacing EPAYS is part of an overall e-government effort led by the Office of Personnel Management (OPM) to consolidate executive branch payroll providers and to simplify and standardize civilian payroll procedures across the Federal government. The e-payroll initiative will transform the current federal civilian payroll service delivery environment and realize efficiencies government-wide. Implementation of PeoplePlus at EPA helps establish the technical infrastructure for EPA to become a payroll customer of the National Finance Center at the start of FY 2005, supporting government-wide payroll consolidation through a phased approach that incorporates modern technology.

The PeoplePlus system consists of two separate applications. One application performs HR functions, and the other performs payroll, time, and labor functions. The records and routine uses of the information in the HR application remain covered by OPM/GOVT–1, a government-wide notice published by OPM April 27, 2000 at 65 FR 24732. The EPA notice published today is a technical amendment to EPA's system of records to notify the public of the routine uses for the new payroll, time, and labor application in PeoplePlus. This notice does not affect any Privacy Act rights accorded individuals who are the subject of agency payroll records. The nature of the records kept by EPA remains the same, and no new uses of the information are proposed. This action simply gives notice that EPAYS is being replaced by the PeoplePlus payroll, time, and labor application. The records are needed to administer EPA's pay and leave requirements, including processing, accounting and reporting requirements.

Today's notice rescinds the portions of EPA's notice published in the **Federal Register** February 22, 2002, at 67 FR 8246 that pertain to the EPA–1 system of records.

To Obtain Copies of This Document and Related Information

EPA has established an official public docket for this action under Docket ID No. OEI–2003–0034. The official public docket is the collection of materials that is available for public viewing at the Office of Environmental Information (OEI) Docket in the EPA Docket Center, (EPA/DC) EPA West, Room B102, 1301 Constitution Ave., NW., Washington, DC. The EPA Docket Center Public Reading Room is open from 8:30 a.m. to 4:30 p.m., Monday through Friday, excluding legal holidays. The telephone number for the Reading Room is (202) 566–1744, and the telephone number for the OEI Docket is (202) 566–1752.

An electronic version of the public docket is available through EPA's electronic public docket and comment system, EPA Dockets. You may use EPA Dockets at *http://www.epa.gov/edocket/* to view public comments, access the index listing of the contents of the official public docket, and to access those documents in the public docket that are available electronically. Although not all docket materials may be available electronically, you may still access any of the publicly available docket materials through the docket facility identified above.

More information on implementation of the Privacy Act at EPA is available at *http://www.epa.gov/privacy/.*

Dated: October 3, 2003.

Richard D. Otis, Jr.,

Deputy Assistant Administrator, Office of Environmental Information.

EPA–1

SYSTEM NAME:

PeoplePlus Payroll, Time and Labor Application.

SYSTEM LOCATION:

National Computer Center, Environmental Protection Agency, Research Triangle Park, North Carolina 27711.

CATEGORIES OF INDIVIDUALS COVERED BY THE SYSTEM:

Current and former EPA employees including Health and Human Services Public Health Service Commissioned Officers assigned to EPA and employees of the Surface Transportation Board (formerly the Interstate Commerce Commission), Department of Transportation.

CATEGORIES OF RECORDS COVERED BY THE SYSTEM:

This system contains personnel, basic benefits, pay, cash awards, and leave records. This includes, but is not limited to, employee information such as: Name(s), date of birth, social security number, home and mailing addresses, grade, employing organization, salary, pay plan, number of hours worked, overtime, compensatory time, leave accrual rate, leave usage and balances, Civil Service Retirement and Federal Retirement System contributions, FICA withholdings, Federal, State, and city tax withholdings, Federal Employee Group Life Insurance withholdings, Federal Employee Health Benefits withholdings, charitable deductions, allotments to financial organizations, garnishments, savings bonds allotments, union dues withholdings, deductions for Internal Revenue Service levies, court ordered child support levies, Federal salary offset deductions, and information on the Leave Transfer Program and the Leave Bank Program.

AUTHORITY FOR MAINTENANCE OF THE SYSTEM:

5 U.S.C. 5101 *et seq.*; 5 U.S.C. 5501 *et seq.*; 5 U.S.C. 5525 *et seq.*; 5 U.S.C. 5701 *et seq.*; 5 U.S.C. 6301 *et seq.*; 31 U.S.C. 3512; Executive Order 9397 (Nov. 22, 1943).

PURPOSE(S):

The records are needed to administer EPA's pay and leave requirements, including processing, accounting and reporting requirements.

ROUTINE USES OF RECORDS MAINTAINED IN THE SYSTEM, INCLUDING CATEGORIES OF USERS, AND THE PURPOSES OF SUCH USES:

A. To the Department of Treasury to issue checks, make payments, make electronic funds transfers, and issue U.S. Savings Bonds.

B. To the Department of Agriculture National Finance Center to credit Thrift Savings Plan deductions and loan payments to employee accounts.

C. To the Department of Labor in connection with a claim filed by an employee for compensation due to a job connected injury or illness.

D. To the Internal Revenue Service; Social Security Administration; and State and local tax authorities in connection with the withholding of employment taxes.

E. To State Unemployment Offices in connection with a claim filed by former employees for unemployment benefits.

F. To the officials of labor organizations as to the identity of employees contributing union dues each pay period and the amount of dues withheld from each employee.

G. To the Office of Personnel Management and to Health Benefit carriers in connection with enrollment and payroll deductions.

H. To the Office of Personnel Management in connection with employee retirement and life insurance deductions.

I. To the Combined Federal Campaign in connection with payroll deductions for charitable contributions.

J. To the Office of Management and Budget and Department of the Treasury to provide required reports on financial management responsibilities.

K. To provide information as necessary to other Federal, State, local or foreign agencies conducting computer matching programs to help eliminate fraud and abuse and to detect unauthorized overpayments made to individuals. When disclosures are made as part of computer matching programs, EPA will comply with the Computer Matching and Privacy Protection Act of 1988.

L. To the Internal Revenue Service in connection with withholdings for tax levies.

M. To the Social Security Administration and the Department of Health and Human Services to provide information on newly hired employees for child support enforcement purposes.

N. To the Department of Health and Human Services in connection with the master personnel and payroll files for their Public Health Service Officers.

GENERAL ROUTINE USES OF EPA SYSTEMS OF RECORDS:

A. Disclosure for Law Enforcement Purposes—Information may be disclosed to the appropriate Federal, State, local, tribal, or foreign agency responsible for investigating, prosecuting, enforcing, or implementing a statute, rule, regulation, or order, if the information is relevant to a violation or potential violation of civil or criminal law or regulation within the jurisdiction of the receiving entity.

B. Disclosure Incident to Requesting Information—Information may be disclosed to any source from which additional information is requested (to the extent necessary to identify the individual, inform the source of the purpose of the request, and to identify the type of information requested), when necessary to obtain information relevant to an agency decision concerning retention of an employee or other personnel action (other than hiring), retention of a security clearance, the letting of a contract, or the issuance or retention of a grant, or other benefit

C. Disclosure to Requesting Agency—Disclosure may be made to a Federal, State, local, foreign, or tribal or other public authority of the fact that this system of records contains information relevant to the retention of an employee, the retention of a security clearance, the letting of a contract, or the issuance or retention of a license, grant, or other benefit. The other agency or licensing organization may then make a request supported by the written consent of the individual for the entire record if it so chooses. No disclosure will be made unless the information has been determined to be sufficiently reliable to support a referral to another office within the agency or to another Federal agency for criminal, civil, administrative, personnel, or regulatory action.

D. Disclosure to Office of Management and Budget—Information may be disclosed to the Office of Management and Budget at any stage in the legislative coordination and clearance process in connection with private relief legislation as set forth in OMB Circular No. A–19.

E. Disclosure to Congressional Offices—Information may be disclosed to a congressional office from the record of an individual in response to an inquiry from the congressional office made at the request of the individual.

F. Disclosure to Department of Justice—Information may be disclosed to the Department of Justice, or in a proceeding before a court, adjudicative body, or other administrative body before which the Agency is authorized

to appear, when: (1) The Agency, or any component thereof; (2) Any employee of the Agency in his or her official capacity; (3) Any employee of the Agency in his or her individual capacity where the Department of Justice or the Agency have agreed to represent the employee; or (4) The United States, if the Agency determines that litigation is likely to affect the Agency or any of its components, is a party to litigation or has an interest in such litigation, and the use of such records by the Department of Justice or the Agency is deemed by the Agency to be relevant and necessary to the litigation provided, however, that in each case it has been determined that the disclosure is compatible with the purpose for which the records were collected.

G. Disclosure to the National Archives—Information may be disclosed to the National Archives and Records Administration in records management inspections.

H. Disclosure to Contractors, Grantees, and Others—Information may be disclosed to contractors, grantees, consultants, or volunteers performing or working on a contract, service, grant, cooperative agreement, job, or other activity for the Agency and who have a need to have access to the information in the performance of their duties or activities for the Agency. When appropriate, recipients will be required to comply with the requirements of the Privacy Act of 1974 as provided in 5 U.S.C. 552a(m).

I. Disclosures for Administrative Claims, Complaints, and Appeals—Information from this system of records may be disclosed to an authorized appeal grievance examiner, formal complaints examiner, equal employment opportunity investigator, arbitrator or other person properly engaged in investigation or settlement of an administrative grievance, complaint, claim, or appeal filed by an employee, but only to the extent that the information is relevant and necessary to the proceeding. Agencies that may obtain information under this routine use include, but are not limited to, the Office of Personnel Management, Office of Special Counsel, Merit Systems Protection Board, Federal Labor Relations Authority, Equal Employment Opportunity Commission, and Office of Government Ethics.

J. Disclosure to the Office of Personnel Management—Information from this system of records may be disclosed to the Office of Personnel Management pursuant to that agency's responsibility for evaluation and oversight of Federal personnel management.

K. Disclosure in Connection with Litigation—Information from this system of records may be disclosed in connection with litigation or settlement discussions regarding claims by or against the Agency, including public filing with a court, to the extent that disclosure of the information is relevant and necessary to the litigation or discussions and except where court orders are otherwise required under section (b)(11) of the Privacy Act of 1974, 5 U.S.C. 552a(b)(11).

POLICIES AND PRACTICES FOR STORING, RETRIEVING, ACCESSING, RETAINING, AND DISPOSING OF RECORDS IN THE SYSTEM:

STORAGE:

These records are maintained in hard copy formats and computer processable storage media such as computer tapes and disks. The computer storage devices are located in the National Computer Center, Research Triangle Park, North Carolina. Backup tapes will be maintained at a disaster recovery site.

RETRIEVABILITY:

These records are retrieved by the employee identification number or name.

SAFEGUARDS:

Computer records are maintained in a secure password protected environment. Access to computer records is limited to those who have a need to know. Permission level assignments will allow users access only to those functions for which they are authorized. Paper records are maintained in locked metal file cabinets. All records are maintained in secure, access-controlled areas or buildings.

RETENTION AND DISPOSAL:

The retention of data in the system will in accordance with the U.S. EPA Records Schedule, as been approved by the National Archives and Records Administration. Employee records are retained on magnetic tapes for an indefinite period. Hard copy records are maintained for varying periods of time, at which time they are disposed of by shredding.

SYSTEM MANAGER(S) AND ADDRESS:

David Bloom, Acting Director, Financial Services Division, Office of the Comptroller, Office of Chief Financial Officer, U.S. Environmental Protection Agency, 1200 Pennsylvania Avenue NW., (MC 2734R), Washington, DC 20460, 202–564–3013.

NOTIFICATION PROCEDURES:

Individuals who want to know whether this system of records contains information about them, who want to access to their records, or who want to contest the contents of a record, should make a written request to the System Manager. Individuals must furnish the following information for their records to be located and identified:

A. Full name.

B. Date of birth.

C. Social security number.

D. Last employing organization (include duty station location) and, for former EPA employees, approximate date(s) of employment.

E. Signature.

RECORD ACCESS PROCEDURE:

Individuals wishing to request access to their records should follow the Notification Procedures. Individuals requesting access will also be required to provide adequate identification, such as a driver's license, employee identification card, or other identifying document. Additional identification procedures may be required in some instances.

CONTESTING RECORD PROCEDURE:

Individuals requesting correction or amendment of their records should follow the Notification Procedures and also identify the record or information to be changed. Complete EPA Privacy Act procedures are set out in 40 CFR part 16.

RECORD SOURCE CATEGORIES:

Information in this system of records is provided by

A. The individual on whom the record is maintained.

B. Agency officials such as managers and supervisors.

C. Consumer reporting agencies, debt collection agencies, Department of Treasury, and other Federal agencies.

SYSTEM EXEMPTED FROM CERTAIN PROVISIONS OF THE ACT:

None.

[FR Doc. 03–25807 Filed 10–9–03; 8:45 am]

BILLING CODE 6560–50–P

ENVIRONMENTAL PROTECTION AGENCY

[FRL–7571–6]

Notice of Proposed Administrative Cost Recovery Settlement Pursuant to the Comprehensive Environmental Response, Compensation, and Liability Act

AGENCY: Environmental Protection Agency.

ACTION: Notice; request for public comment.

SUMMARY: In accordance with Section 122(i) of the Comprehensive

Environmental Response, Compensation, and Liability Act, as amended (''CERCLA''), notice is hereby given of a proposed administrative cost recovery settlement under Section 122(h)(1) of CERCLA concerning the Windham Alloys site in Windham, Ohio which was signed by the EPA Superfund Division Director, Region 5, on September 30, 2003. The settlement resolves EPA's claim for past costs under Section 107(a) of CERCLA against the estate of Tony D. Rubino, the Tony D. Revocable Trust, the Irene Rubino Revocable Trust and the trustee and executor of the trusts and estate, Jack Alpern (Settling Parties).

EPA has determined that the Settling parties are financially able to pay a portion of EPA's past costs if Settling Parties sell certain real property. The settlement requires the Settling Parties to use their best efforts to sell real property held in the estate and trusts and to pay to the Hazardous Substances Superfund a percentage of the proceeds from the sale of the real estate minus reasonable closing costs. The payments are due within 30 days of the transfers. If both properties sell for approximately their fair market value, the Settling Parties' payments to the Hazardous Substances Superfund will be approximately $520,000.

For thirty (30) days following the date of publication of this notice, the Agency will receive written comments relating to the settlement. The Agency will consider all comments received and may modify or withdraw its consent to the settlement if comments received disclose facts or considerations which indicate that the settlement is inappropriate, improper, or inadequate. The Agency's response to any comments received will be available for public inspection at the Superfund Records Center, located at 77 West Jackson Boulevard, Seventh Floor, Chicago, Illinois.

DATES: Comments must be submitted on or before November 10, 2003.

ADDRESSES: The proposed settlement and additional background information relating to the settlement are available for public inspection at the Superfund Records Center, located at 77 West Jackson Boulevard, Seventh Floor, Chicago, Illinois. A copy of the proposed settlement may be obtained from the Superfund Records Center, located at 77 West Jackson Boulevard, Seventh Floor, Chicago, Illinois. Comments should reference the Windham Alloys site and EPA Docket No. V–W–03–760 and should be addressed to Randa Bishlawi, Associate Regional Counsel, 77 West Jackson Boulevard (C–14J), Chicago, Illinois 60604.

FOR FURTHER INFORMATION CONTACT: Randa Bishlawi, (312) 886–0510, Associate Regional Counsel, 77 West Jackson Boulevard (C–14J), Chicago, Illinois 60604.

Dated: September 30, 2003.

William E. Muno,

Director, Superfund Divison, Region 5.

[FR Doc. 03–25806 Filed 10–9–03; 8:45 am]

BILLING CODE 6560–50–P

FEDERAL COMMUNICATIONS COMMISSION

Public Information Collection Approved by Office of Management and Budget

AGENCY: Federal Communications Commission.

ACTION: Notice.

SUMMARY: The Federal Communications Commission (FCC) received approval from the Office of Management and Budget (OMB) on September 26, 2003 for the information collection requirements contained in Report and Order and Memorandum Opinion and Order on Reconsideration, *In the Matter of Remedial Steps for Failure to Comply with Digital Television Construction Schedule* (''DTV Policy Statement''), MM Docket No. 02–113, FCC 03–77, at 68 FR 43329, July 22, 2003.

DATES: The information collection requirements published at 68 FR 43329, July 22, 2003, were approved on September 26, 2003.

ADDRESSES: Federal Communications Commission, 445 12th Street, SW., Washington, DC 20554.

FOR FURTHER INFORMATION CONTACT: Shaun Maher, Media Bureau, (202) 418–2324.

SUPPLEMENTARY INFORMATION: The DTV Policy Statement published at 68 FR 43329, July 22, 2003, established procedures to be followed when the staff denies a request to extend a television station's digital television (DTV) construction deadline. The information collection(s) were approved by OMB on September 26, 2003. OMB Control No. 3060–1041. If you have any comments on these burden estimates, or how we can improve the collection(s) and reduce the burden(s) they cause you, please write to Les Smith, Federal Communications Commission, Room 1–A804, 445 12th Street, SW., Washington, DC 20554. Please include the OMB Control Number, 3060–1041, in your correspondence. We will also accept your comments regarding the Paperwork Reduction Act aspects of the collection(s) via the Internet, if you send them to *Leslie.Smith@fcc.gov* or call (202) 418–0217.

Synopsis

As required by the Paperwork Reduction Act of 1995 (44 U.S.C. 3507), the FCC is notifying the public that it received approval from OMB on September 26, 2003 for the information collection requirements contained in the Commission's Report and Order and Memorandum Opinion and Order on Reconsideration, *In the Matter of Remedial Steps for Failure to Comply with Digital Television Construction Schedule,* MM Docket No. 02–113, FCC 03–77, at 68 FR 43329, July 22, 2003. The OMB Control Number is 3060–1041. The annual reporting burden for the collection(s) of information, including the time for gathering and maintaining the collection of information, is estimated to be: 400 respondents, an average of 1.2 hours per response per annum, for a total annual hour burden of 460, and $304,000 in total annual costs.

Under 5 CFR part 1320, an agency may not conduct or sponsor a collection of information unless it displays a current valid OMB Control Number. No person shall be subject to any penalty for failing to comply with a collection of information subject to the Paperwork Reduction Act (PRA) that does not display a valid OMB Control Number. The OMB Control Number is 3060–1041.

The foregoing notice is required by the Paperwork Reduction Act of 1995, Public Law 104–13, October 1, 1995, 44 U.S.C. 3507.

Federal Communications Commission.

Marlene H. Dortch,

Secretary.

[FR Doc. 03–25739 Filed 10–9–03; 8:45 am]

BILLING CODE 6712–01–P

FEDERAL COMMUNICATIONS COMMISSION

[Report No. 2633]

Petition for Reconsideration of Action in Rulemaking Proceeding

October 3, 2003.

Petition for Reconsideration has been filed in the Commission's Rulemaking proceeding listed in this Public Notice and published pursuant to 47 CFR 1.429(e). The full text of this document is available for viewing and copying in Room CY–A257, 445 12th Street, SW., Washington, DC or may be purchased

from the Commission's copy contractor, Qualex International (202) 863–2893. Oppositions to this petition must be filed by October 27, 2003. *See* section 1.4(b)(1) of the Commission's rules (47 CFR 1.4(b)(1)). Replies to an opposition must be filed within 10 days after the time for filing oppositions have expired.

Subject: In the Matter of the Table of FM Allotments (Annville, Mount Vernon, West Liberty, and Manchester, Kentucky) (RM–10798).

Number of Petitions Filed: 1.

Marlene H. Dortch,

Secretary.

[FR Doc. 03–25741 Filed 10–9–03; 8:45 am]

BILLING CODE 6712–01–M

FEDERAL HOUSING FINANCE BOARD

[No. 2003–N–8]

Federal Home Loan Bank Members Selected for Community Support Review

AGENCY: Federal Housing Finance Board.

ACTION: Notice.

SUMMARY: The Federal Housing Finance Board (Finance Board) is announcing the Federal Home Loan Bank (Bank) members it has selected for the 2002–03 seventh quarter review cycle under the Finance Board's community support requirements regulation. This notice also prescribes the deadline by which Bank members selected for review must submit Community Support Statements to the Finance Board.

DATES: Bank members selected for the 2002–03 seventh quarter review cycle under the Finance Board's community support requirements regulation must submit completed Community Support Statements to the Finance Board on or before November 28, 2003.

ADDRESSES: Bank members selected for the 2002–03 seventh quarter review cycle under the Finance Board's community support requirements regulation must submit completed Community Support Statements to the Finance Board either by regular mail at the Federal Housing Finance Board, Office of Supervision, Community Investment and Affordable Housing, 1777 F Street, NW, Washington, DC 20006, or by electronic mail at *fitzgeralde@fhfb.gov.*

FOR FURTHER INFORMATION CONTACT: Emma J. Fitzgerald, Program Analyst, Office of Supervision, Community Investment and Affordable Housing, by telephone at 202/408–2874, by electronic mail at *fitzgeralde@fhfb.gov*, or by regular mail at the Federal Housing Finance Board, 1777 F Street, NW, Washington, DC 20006.

SUPPLEMENTARY INFORMATION:

I. Selection for Community Support Review

Section 10(g)(1) of the Federal Home Loan Bank Act (Bank Act) requires the Finance Board to promulgate regulations establishing standards of community investment or service Bank members must meet in order to maintain access to long-term advances. *See* 12 U.S.C. 1430(g)(1). The regulations promulgated by the Finance Board must take into account factors such as the Bank member's performance under the Community Reinvestment Act of 1977 (CRA), 12 U.S.C. 2901 *et seq.*, and record of lending to first-time homebuyers. *See* 12 U.S.C. 1430(g)(2). Pursuant to section 10(g) of the Bank Act, the Finance Board has promulgated a community support requirements regulation that establishes standards a Bank member must meet in order to maintain access to long-term advances, and review criteria the Finance Board must apply in evaluating a member's community support performance. *See* 12 CFR part 944. The regulation includes standards and criteria for the two statutory factors—CRA performance and record of lending to first-time homebuyers. 12 CFR 944.3. Only members subject to the CRA must meet the CRA standard. 12 CFR 944.3(b). All members, including those not subject to CRA, must meet the first-time homebuyer standard. 12 CFR 944.3(c).

Under the rule, the Finance Board selects approximately one-eighth of the members in each Bank district for community support review each calendar quarter. 12 CFR 944.2(a). The Finance Board will not review an institution's community support performance until it has been a Bank member for at least one year. Selection for review is not, nor should it be construed as, any indication of either the financial condition or the community support performance of the member.

Each Bank member selected for review must complete a Community Support Statement and submit it to the Finance Board by the November 28, 2003 deadline prescribed in this notice. 12 CFR 944.2(b)(1)(ii) and (c). On or before October 27, 2003, each Bank will notify the members in its district that have been selected for the 2002–03 seventh quarter community support review cycle that they must complete and submit to the Finance Board by the deadline a Community Support Statement. 12 CFR 944.2(b)(2)(i). The member's Bank will provide a blank Community Support Statement Form, which also is available on the Finance Board's Web site: *http://www.fhfb.gov*. Upon request, the member's Bank also will provide assistance in completing the Community Support Statement.

The Finance Board has selected the following members for the 2002–03 seventh quarter community support review cycle:

Federal Home Loan Bank of Boston—District 1

Apple Valley Bank & Trust Company	Cheshire	Connecticut.
First New England Federal Credit Union	East Hartford	Connecticut.
Greenwich Bank & Trust Company	Greenwich	Connecticut.
Ledge Light Federal Credit Union	Groton	Connecticut.
Eastern Federal Bank	Norwich	Connecticut.
United Business and Industry Federal Credit Union	Plainville	Connecticut.
Putnam Savings Bank	Putnam	Connecticut.
Workers Federal Credit Union	Stafford Springs	Connecticut.
Westport National Bank	Westport	Connecticut.
Merrill Merchants Bank	Bangor	Maine.
Seaboard Federal Credit Union	Bucksport	Maine.
Union Trust Company	Ellsworth	Maine.
NorState Federal Credit Union	Madawaska	Maine.
Norway Savings Bank	Norway	Maine.
University Credit Union	Orono	Maine.
Infinity Federal Credit Union	Portland	Maine.
Maine Bank & Trust Company	Portland	Maine.

Belmont Savings Bank	Belmont	Massachusetts.
The Lenox National Bank	Lenox	Massachusetts.
Butler Bank	Lowell	Massachusetts.
Enterprise Bank and Trust Company	Lowell	Massachusetts.
Northmark Bank	North Andover	Massachusetts.
RTN Federal Credit Union	Waltham	Massachusetts.
Westborough Bank	Westborough	Massachusetts.
Commerce Bank & Trust Company	Worcester	Massachusetts.
Members First CU of New Hampshire	Manchester	New Hampshire.
Balboa Reinsurance Company	Burlington	Vermont.
ChittendenTrust Company	Burlington	Vermont.
Vermont Federal Credit Union	Burlington	Vermont.
NorthCountry Federal Credit Union	South Burlington	Vermont.
New England Federal Credit Union	Williston	Vermont.

Federal Home Loan Bank of New York—District 2

Affinity Federal Credit Union	Bedminster	New Jersey.
Somerset Hills Bank	Bernardsville	New Jersey.
The Community Bank of New Jersey	Freehold	New Jersey.
MIIX Insurance Company	Lawrenceville	New Jersey.
Boardwalk Bank	Linwood	New Jersey.
Millville Savings and Loan Association	Millville	New Jersey.
Crown Bank, NA	Ocean City	New Jersey.
Hudson City Savings Bank	Paramus	New Jersey.
Cenlar FSB	Trenton	New Jersey.
Llewellyn-Edison Savings Bank, FSB	West Orange	New Jersey.
Bank of Akron	Akron	New York.
State Employees Federal Credit Union	Albany	New York.
Putnam County Savings Bank	Brewster	New York.
First American International Bank	Brooklyn	New York.
HSBC Bank, USA	Buffalo	New York.
First State Bank—Canisteo	Canisteo	New York.
Flushing Savings Bank, F.S.B.	Flushing	New York.
Great Eastern Bank	Flushing	New York.
American Community Bank	Glen Cove	New York.
Gouverneur Savings & Loan Association	Gouverneur	New York.
FAA Eastern Region Federal Credit Union	Jamaica	New York.
Bank Leumi USA	New York	New York.
Hudson Valley Federal Credit Union	Poughkeepsie	New York.
WCTA Federal Credit Union	Sodus	New York.
Power Federal Credit Union	Syracuse	New York.
Wyoming County Bank	Warsaw	New York.
Community Mutual Savings Bank	White Plains	New York.
Kraft Foods Federal Credit Union	White Plains	New York.
Hudson Valley Bank	Yonkers	New York.
Firstbank—Puerto Rico	Santurce	Puerto Rico.
Bank of St. Croix, Inc.	Christiansted	Virgin Islands.

Federal Home Loan Bank of Pittsburgh—District 3

AIG Federal Savings Bank	Wilmington	Delaware.
Lehman Brothers Bank, FSB	Wilmington	Delaware.
Wilmington Trust Company	Wilmington	Delaware.
First Columbia Bank & Trust Company	Bloomsburg	Pennsylvania.
Fidelity Savings and Loan Association of Bucks County	Bristol	Pennsylvania.
Citizens Savings Association	Clarks Summit	Pennsylvania.
CSB Bank	Curwensville	Pennsylvania.
County Savings Association	Essington	Pennsylvania.
The First National Bank in Fleetwood	Fleetwood	Pennsylvania.
Swineford National Bank	Hummels Wharf	Pennsylvania.
S & T Bank	Indiana	Pennsylvania.
Jonestown Bank and Trust Company	Jonestown	Pennsylvania.
Commercial National Bank of Pennsylvania	Latrobe	Pennsylvania.
Lafayette Ambassador Bank	LeHigh Valley	Pennsylvania.
Farmers First Bank	Lititz	Pennsylvania.
Members 1st Federal Credit Union	Mechanicsburg	Pennsylvania.
The First National Bank of Mercersburg	Mercersburg	Pennsylvania.
Juniata Valley Bank	Mifflintown	Pennsylvania.
Mid Penn Bank	Millersburg	Pennsylvania.
Royal Bank of Pennsylvania	Narberth	Pennsylvania.
Atlantic Federal Credit Union	Newtown Square	Pennsylvania.
The Peoples Bank of Oxford	Oxford	Pennsylvania.
Port Richmond Savings	Philadelphia	Pennsylvania.
Dwelling House Savings and Loan Association	Pittsburgh	Pennsylvania.
Bank Pittsburgh	Pittsburgh	Pennsylvania.

Great American Federal	Pittsburgh	Pennsylvania.
Patriot Bank	Pottstown	Pennsylvania.
Union Bank and Trust Company	Pottsville	Pennsylvania.
The Fidelity Deposit & Discount Bank S	Cranton	Pennsylvania.
Citadel Federal Credit Union	Thorndale	Pennsylvania.
The Turbotville National Bank	Turbotville	Pennsylvania.
Merck, Sharp & Dohme Federal Credit Union	West Point	Pennsylvania.
WNB Bank	Williamsport	Pennsylvania.
Woodlands Bank	Williamsport	Pennsylvania.
The United Federal Credit Union	Morgantown	West Virginia.
Jefferson Security Bank	Shepherdstown	West Virginia.
Steel Works Community Federal Credit Union	Weirton	West Virginia.

Federal Home Loan Bank of Atlanta—District 4

Compass Bank	Birmingham	Alabama.
National Bank of Commerce of Birmingham	Birmingham	Alabama.
First National Bank of Shelby County	Columbiana	Alabama.
Bank of Dadeville	Dadeville	Alabama.
The Peoples Bank of Coffee County	Elba	Alabama.
The Citizens Bank	Enterprise	Alabama.
First Southern Bank	Florence	Alabama.
Citizens Bank & Savings Company	Russellville	Alabama.
Troy Bank & Trust Company	Troy	Alabama.
Security Bank	Tuscaloosa	Alabama.
State Bank and Trust	Winfield	Alabama.
IDB—IIC Federal Credit Union	Washington	D.C.
United States Senate	Washington	D.C.
Gibraltar Bank, FSB	Coral Gables	Florida.
Merchants and Southern Bank	Gainesville	Florida.
Ocala National Bank	Ocala	Florida.
Bankers Insurance Company	St. Petersburg	Florida.
Suncoast Schools Federal Credit Union	Tampa	Florida.
Southern Exchange Bank	Tampa	Florida.
Citrus Bank, N.A.	Vero Beach	Florida.
First Choice Credit Union West	Palm Beach	Florida.
CDC Federal Credit Union	Atlanta	Georgia.
Flag Bank	Atlanta	Georgia.
Bank of Camilla	Camilla	Georgia.
Rabun County Bank	Clayton	Georgia.
PlantersFirst	Cordele	Georgia.
Colony Bank of Dodge County	Eastman	Georgia.
South Georgia Bank	Glennville	Georgia.
The Gordon Bank	Gordon	Georgia.
Citizens Community Bank	Hahira	Georgia.
Georgia State Bank	Mableton	Georgia.
Pelham Banking Company	Pelham	Georgia.
The Bank of Perry	Perry	Georgia.
United Bank and Trust Company	Rockmart	Georgia.
The Savannah Bank, N.A	Savannah	Georgia.
The Park Avenue Bank	Valdosta	Georgia.
Oconee State Bank	Watkinsville	Georgia.
The Patterson Bank	Waycross	Georgia.
The First National Bank of Waynesboro	Waynesboro	Georgia.
First Mariner Bank	Baltimore	Maryland.
Bradford Federal Savings Bank	Baltimore	Maryland.
Fullerton Federal Savings Association	Baltimore	Maryland.
Johns Hopkins Federal	Baltimore	Maryland.
Kosciuszko Federal Savings Bank	Baltimore	Maryland.
Midstate Federal Savings & Loan Association	Baltimore	Maryland.
The Washington Savings Bank, F.S.B.	Bowie	Maryland.
The Centreville National Bank of Maryland	Centreville	Maryland.
The Columbia Bank	Columbia	Maryland.
County Banking and Trust Company	Elkton	Maryland.
The Bank of Glen Burnie	Glen Burnie	Maryland.
Cedar Point Federal Credit Union	Lexington Park	Maryland.
Sandy Spring Bank	Olney	Maryland.
BUCS Federal Bank	Owings Mills	Maryland.
Peninsula Bank	Salisbury	Maryland.
Prince George's Federal Savings Bank	Upper Marlboro	Maryland.
Belmont Federal Savings and Loan Association	Belmont	North Carolina.
Black Mountain Savings Bank, S.S.B.	Black Mountain	North Carolina.
Morganton Federal Savings & Loan Association	Morganton	North Carolina.
Coastal Federal Credit Union	Raleigh	North Carolina.
Security Savings Bank, SSB	Southport	North Carolina
Bank of North Carolina	Thomasville	North Carolina.

Carolina State Bank	Clinton	South Carolina.
Clover Community Bank	Clover	South Carolina.
The Peoples National Bank	Easley	South Carolina.
Carolina First Bank	Greenville	South Carolina.
Williamsburg First National Bank	Kingstree	South Carolina.
Provident Community Bank	Union	South Carolina.
Arthur State Bank	Union	South Carolina.
Pinnacle State Bank	Woodruff	South Carolina.
Union Bank & Trust Company	Bowling Green	Virginia.
The First National Bank of Christiansburg	Christiansburg	Virginia.
The National Bank of Fredericksburg	Fredericksburg	Virginia.
The Bank of McKenney	McKenney	Virginia.
Greater Atlantic Bank	Reston	Virginia.
Farmers and Merchants Bank	Timberville	Virginia.
Southern Financial Bank	Warrenton	Virginia.

Federal Home Loan Bank of Cincinnati—District 5

Union National Bank & Trust Company	Barbourville	Kentucky.
Bank of Benton	Benton	Kentucky.
Taylor County Bank	Campbellsville	Kentucky.
First Federal Savings Bank	Cynthiana	Kentucky.
First Federal Savings Bank	Elizabethtown	Kentucky.
Commonwealth Community Bank	Hartford	Kentucky.
The Citizens Bank	Hickman	Kentucky.
The First State Bank	Irvington	Kentucky.
Whitaker Bank, NA	Lexington	Kentucky.
Cumberland Valley National Bank and Trust Company	London	Kentucky.
Inez Deposit Bank, fsb	Louisa	Kentucky.
River City Bank	Louisville	Kentucky.
Green River Bank	Morgantown	Kentucky.
Citizens Bank of New Liberty	New Liberty	Kentucky.
Citizens National Bank of Paintsville	Paintsville	Kentucky.
West Point Bank	Radcliff	Kentucky.
Sebree Deposit Bank	Sebree	Kentucky.
The Peoples Bank	Taylorsville	Kentucky.
United Bank & Trust Company	Versailles	Kentucky.
The Farmers & Merchants State Bank	Archbold	Ohio.
The Citizens Bank of Ashville	Ashville	Ohio.
The Caldwell Savings and Loan Company	Caldwell	Ohio.
CINCO Federal Credit Union	Cincinnati	Ohio.
Century Federal Credit Union	Cleveland	Ohio.
The Pioneer Savings Bank	Cleveland	Ohio.
Clyde-Findlay Area Credit Union	Clyde	Ohio.
First Federal Savings and Loan Association of Delta	Delta	Ohio.
Ohio. Central Savings	Dublin	Ohio.
The Croghan Colonial Bank	Fremont	Ohio.
First Service Federal Credit Union	Groveport	Ohio.
The Killbuck Savings Bank Company	Killbuck	Ohio.
The Fahey Banking Company of Marion	Marion	Ohio.
The Old Fort Banking Company	Old Fort	Ohio.
Cornerstone Bank	Springfield	Ohio.
The Security National Bank and Trust Company	Springfield	Ohio.
Peoples Savings Bank of Troy	Troy	Ohio.
The First National Bank of Wellston	Wellston	Ohio.
The Wayne Savings Community Bank	Wooster	Ohio.
First Federal Savings Bank	Clarksville	Tennessee.
The Bank/First Citizens Bank	Cleveland	Tennessee.
Peoples Bank	Clifton	Tennessee.
Bank of Dickson	Dickson	Tennessee.
Security Bank	Dyersburg	Tennessee.
Greeneville Federal Bank, fsb	Greeneville	Tennessee.
Citizens Bank	Hartsville	Tennessee.
Citizens Bank of Blount County	Maryville	Tennessee.
National Bank of Commerce	Memphis	Tennessee.
The Bank of Moscow	Moscow	Tennessee.
ORNL Federal Credit Union	Oak Ridge	Tennessee.
Merchants and Planters Bank	Toone	Tennessee.
AEDC Federal Credit Union	Tullahoma	Tennessee.

Federal Home Loan Bank Indianapolis—District 6

Star Financial Bank	Anderson	Indiana.
First Community Bank and Trust	Bargersville	Indiana.
Hendricks County Bank and Trust Company	Brownsburg	Indiana.
First Farmers Bank & Trust	Converse	Indiana.

1st National Bank of Dana	Dana	Indiana.
Professional Federal Credit Union	Fort Wayne	Indiana.
Springs Valley Bank and Trust	French Lick	Indiana.
The Garrett State Bank	Garrett	Indiana.
Griffith Savings Bank	Griffith	Indiana.
Eli Lilly Federal Credit Union	Indianapolis	Indiana.
Indiana Members Credit Union	Indianapolis	Indiana.
First National Bank & Trust	Kokomo	Indiana.
Dearborn SA, FA	Lawrenceburg	Indiana.
Fidelity FSB	Marion	Indiana.
Farmers State Bank	Mentone	Indiana.
The New Washington State Bank	New Washington	Indiana.
The North Salem State Bank	North Salem	Indiana.
Tri-County Bank & Trust Company	Roachdale	Indiana.
Central Bank	Russiaville	Indiana.
Mid-Southern Savings Bank, FSB	Salem	Indiana.
Teachers Credit Union	South Bend	Indiana.
Bank of Lenawee	Adrian	Michigan.
University Bank	Ann Arbor	Michigan.
Blissfield State Bank	Blissfield	Michigan.
Byron Center State Bank	Byron Center	Michigan.
CSB Bank	Capac	Michigan.
Independent Bank East Michigan.	Caro	Michigan.
Exchange State Bank	Carsonville	Michigan.
First National Bank of Crystal Falls	Crystal Falls	Michigan.
State Savings Bank	Frankfort	Michigan.
First National Bank of Gaylord	Gaylord	Michigan.
First Community Bank	Harbor Springs	Michigan.
Firstbank-Lakeview	Lakeview	Michigan.
Republic Bank	Lansing	Michigan.
G.W. Jones Exchange Bank	Marcellus	Michigan.
Team One Credit Union	Saginaw	Michigan.
Shelby State Bank	Shelby	Michigan.
ChoiceOne Bank	Sparta	Michigan.
Midwest Guaranty Bank	Troy	Michigan.

Federal Home Loan Bank of Chicago—District 7

State Bank of the Lakes	Antioch	Illinois.
First National Bank of Ava	Ava	Illinois.
Town & Country Bank	Buffalo	Illinois.
Farmers State Bank of Hoffman	Centralia	Illinois.
American Union Savings & Loan	Chicago	Illinois.
The PrivateBank and Trust Company	Chicago	Illinois.
First East Side Savings Bank	Chicago	Illinois.
Cole Taylor Bank	Chicago	Illinois.
Self-reliance Ukrainian Federal Credit Union	Chicago	Illinois.
LaSalle Bank N.A.	Chicago	Illinois.
International Bank of Chicago	Chicago	Illinois.
Builders Bank	Chicago	Illinois.
First Bank of the Americas	Chicago	Illinois.
Park Federal Savings Bank	Chicago	Illinois.
First National Bank	Chicago Heights	Illinois.
Cissna Park State Bank	Cissna Park	Illinois.
GreatBank, N.A.	Evanston	Illinois.
Peoples National Bank	Fairfield	Illinois.
UnionBank/Northwest	Hanover	Illinois.
National Bank	Hillsboro	Illinois.
Community Trust Bank	Irvington	Illinois.
First Midwest Bank	Itasca	Illinois.
Midwest Bank of Western Illinois	Monmouth	Illinois.
BankPlus, fsb	Morton	Illinois.
Bank of Illinois	Normal	Illinois.
Hemlock Federal Bank for Savings	Oak Forest	Illinois.
First Community Bank, N.A.	Olney	Illinois.
Palos Bank and Trust Company	Palos Heights	Illinois.
Citizens Equity First Credit Union	Peoria	Illinois.
Pontiac National Bank	Pontiac	Illinois.
First Bankers Trust Company, N.A.	Quincy	Illinois.
First National Bank of Raymond	Raymond	Illinois.
AMCORE Bank N.A.	Rockford	Illinois.
The First National Bank in Toledo	Toledo	Illinois.
Busey Bank	Urbana	Illinois.
Fox Communities Credit Union	Appleton	Wisconsin.
Peoples State Bank	Augusta	Wisconsin.
First National Bank & Trust of Beloit	Beloit	Wisconsin.

Citizens State Bank	Cadott	Wisconsin.
Denmark State Bank	Denmark	Wisconsin.
Security National Bank of Durand	Durand	Wisconsin.
Union Bank and Trust Company	Evansville	Wisconsin.
1st Security Credit Union	Green Bay	Wisconsin.
State Bank of Howards Grove	Howards Grove	Wisconsin.
State Bank of La Crosse	La Crosse	Wisconsin.
Trane Federal Credit Union	La Crosse	Wisconsin.
Capitol Bank	Madison	Wisconsin.
The Park Bank	Madison	Wisconsin.
Premier Community Bank	Marion	Wisconsin.
Bay View Federal Savings and Loan Association	Milwaukee	Wisconsin.
Farmers Savings Bank	Mineral Point	Wisconsin.
Alliance Bank	Mondovi	Wisconsin.
The Necedah Bank	Necedah	Wisconsin.
Farmers Exchange Bank	Neshkoro	Wisconsin.
Hometown Bank	St. Cloud	Wisconsin.
Community State Bank	Union Grove	Wisconsin.

Federal Home Loan Bank of Des Moines—District 8

Union National Bank	Anita	Iowa.
Quad City Bank and Trust Company	Bettendorf	Iowa.
Exchange State Bank	Collins	Iowa.
NCMIC Insurance Company	Des Moines	Iowa.
Security Savings Bank	Eagle Grove	Iowa.
Iowa State Bank and Trust Company of Fairfield Iowa	Fairfield	Iowa.
First Bank and Trust Company	Glidden	Iowa.
American National Bank	Holstein	Iowa.
Home State Bank	Jefferson	Iowa.
Security Savings Bank	Larchwood	Iowa.
Farmers & Merchants Savings Bank	Manchester	Iowa.
Tama State Bank	Marshalltown	Iowa.
First Citizens National Bank	Mason City	Iowa.
Northwoods State Bank	Mason City	Iowa.
Pilot Grove Savings Bank	Pilot Grove	Iowa.
Frontier Bank	Rock Rapids	Iowa.
Citizens State Bank	Sheldon	Iowa.
The First National Bank	Shenandoah	Iowa.
Morningside Bank & Trust	Sioux City	Iowa.
Cedar Valley State Bank	St. Ansgar	Iowa.
First Bank	West Des Moines	Iowa.
Security Bank Minnesota	Albert Lea	Minnesota.
First Security Bank	Byron	Minnesota.
Canton State Bank	Canton	Minnesota.
Miners National Bank of Eveleth	Eveleth	Minnesota.
State Bank of Young America	Norwood Young America	Minnesota.
Peoples State Bank	Plainview	Minnesota.
United Prairie Bank-Slayton	Slayton	Minnesota.
First Security Bank	Sleepy Eye	Minnesota.
Cherokee State Bank	St. Paul	Minnesota.
First National Bank in Wadena	Wadena	Minnesota.
Wadena State Bank	Wadena	Minnesota.
First Security State Bank	Charleston	Missouri.
Mississippi County Savings & Loan Association	Charleston	Missouri.
Peoples Bank	Cuba	Missouri.
Century Bank of the Ozarks	Gainesville	Missouri.
The Hamilton Bank	Hamilton	Missouri.
Farmers and Merchants Bank	Hannibal	Missouri.
Premier Bank	Jefferson City	Missouri.
B & L Bank	Lexington	Missouri.
Bank of Minden	Mindenmines	Missouri.
Bank of Cairo and Moberly	Moberly	Missouri.
St. Clair County State Bank	Osceola	Missouri.
Platte Valley Bank of Missouri	Platte City	Missouri.
Farmers State Bank of Northern Missouri	Savannah	Missouri.
Central Bank of Missouri	Sedalia	Missouri.
Great Southern Bank	Springfield	Missouri.
Mid-Missouri Bank	Springfield	Missouri.
Gate City Bank	Fargo	North Dakota.
Community First National Bank	Fargo	North Dakota.
State Bank of Alcester	Alcester	South Dakota.
First American Bank & Trust	Sioux Falls	South Dakota.

Federal Home Loan Bank of Dallas—District 9

First National Bank of Izard County	Calico Rock	Arkansas.

First Federal Bank of AR, FA	Harrison	Arkansas.
Simmons First Bank of Jonesboro	Jonesboro	Arkansas.
Simmons First Bank of Russellville	Russellville	Arkansas.
Community Bank of North Arkansas	Springdale	Arkansas.
Warren Bank & Trust Company	Warren	Arkansas.
Mississippi River Bank	Belle Chasse	Louisiana.
Citizens Savings Bank	Bogalusa	Louisiana.
Homeland Federal Savings Bank	Columbia	Louisiana.
Peoples State Bank	Many	Louisiana.
City Bank & Trust Company	Natchitoches	Louisiana.
First Bank and Trust	New Orleans	Louisiana.
First Federal Savings & Loan Association	Opelousas	Louisiana.
ANECA Federal Credit Union	Shreveport	Louisiana.
Bank of Anguilla	Anguilla	Mississippi.
Guaranty Bank & Trust Company	Belzoni	Mississippi.
The Carthage Bank	Carthage	Mississippi.
First National Bank of Clarksdale	Clarksdale	Mississippi.
Cleveland Community Bank SSB	Cleveland	Mississippi.
Bank of Forest	Forest	Mississippi.
Hancock Bank	Gulfport	Mississippi.
Merchants and Farmers Bank	Kosciusko	Mississippi.
Priority One Bank	Magee	Mississippi.
First National Bank of Picayune	Picayune	Mississippi.
The Peoples Bank	Ripley	Mississippi.
First National Bank in Alamogordo	Alamogordo	New Mexico.
First State Bank of Taos	Albuquerque	New Mexico.
New Mexico Educators Federal Credit Union	Albuquerque	New Mexico.
Ranchers Banks	Belen	New Mexico.
FirstBank	Clovis	New Mexico.
University Federal Credit Union	Austin	Texas.
Citizens National Bank at Brownwood	Brownwood	Texas.
Columbus State Bank	Columbus	Texas.
Mainbank, N.A.	Dallas	Texas.
Share Plus Federal Credit Union	Dallas	Texas.
Texas Community Bank & Trust	Dallas	Texas.
Graham Savings & Loan, FA	Graham	Texas.
Planters & Merchants State Bank	Hearne	Texas.
MemberSource Credit Union	Houston	Texas.
Jacksonville Savings Bank, SSB	Jacksonville	Texas.
American State Bank	Lubbock	Texas.
American Bank of Texas, N.A.	Marble Falls	Texas.
First Bank & Trust of Memphis, Texas	Memphis	Texas.
Lone Star Bank	Moulton	Texas.
The Liberty National Bank in Paris	Paris	Texas.
Security State Bank	Pearsall	Texas.
Hale County State Bank	Plainview	Texas.
1st International Bank	Plano	Texas.
Legacy Bank of Texas	Plano	Texas.
Texas State Bank San	Angelo	Texas.
Community Bank, N.A.	San Benito	Texas.
Texas Savings Bank, s.s.b.	Snyder	Texas.
Mainland Bank	Texas City	Texas.
First National Bank of Van Alstyne	Van Alstyne	Texas.
Herring National Bank	Vernon	Texas.
Community Bank	Wellington	Texas.

Federal Home Loan Bank of Topeka—District 10

Bank of Colorado	Fort Collins	Colorado.
Alpine Bank	Glenwood Springs	Colorado.
Community Banks of the Rockies	La Jara	Colorado.
First National Bank of Las Animas	Las Animas	Colorado.
FirstBank of Arapahoe County	Littleton	Colorado.
Mancos Valley Bank	Mancos	Colorado.
The Pueblo Bank and Trust Company	Pueblo	Colorado.
High Country Bank	Salida	Colorado.
Community National Bank	Chanute	Kansas.
Fidelity State Bank and Trust Company	Dodge City	Kansas.
Armed Forces Bank N.A.	Fort Leavenworth	Kansas.
Heartland Bank, NA	Jewell	Kansas.
First National Bank and Trust Company	Junction City	Kansas.
First State Bank of Kansas City, KS	Kansas City	Kansas.
Premier Bank	Lenexa	Kansas.
Metcalf Bank	Overland Park	Kansas.
TeamBank, N.A.	Paola	Kansas.
Community National Bank	Seneca	Kansas.

Mid American Credit Union	Wichita	Kansas.
Five Points Bank	Grand Island	Nebraska.
First State Bank	Lincoln	Nebraska.
First National B&T Company of Minden	Minden	Nebraska.
FCE Credit Union	Omaha	Nebraska.
Plattsmouth State Bank	Plattsmouth	Nebraska.
The Jones National Bank & Trust Company	Seward	Nebraska.
First National Bank of Wahoo	Wahoo	Nebraska.
The First National Bank and Trust Company of Ada	Ada	Oklahoma.
Alva State Bank & Trust Company	Alva	Oklahoma.
Community National Bank	Alva	Oklahoma.
American National Bank	Ardmore	Oklahoma.
First BankCentere	Broken Arrow	Oklahoma.
Farmers and Merchants Bank	Crescent	Oklahoma.
The Eastman National Bank of Newkirk	Newkirk	Oklahoma.
First Bethany Bank and Trust, N.A.	Oklahoma City	Oklahoma.
Oklahoma Employees Credit Union	Oklahoma City	Oklahoma.
The First National Bank & Trust Company of Okmulgee	Okmulgee	Oklahoma.
First State Bank	Picher	Oklahoma.
F & M Bank, NA, Oklahoma City, Oklahoma	Piedmont	Oklahoma.
McClain Bank, NA	Purcell	Oklahoma.
Tinker Federal Credit Union	Tinker AFB	Oklahoma.
Oklahoma Central Credit Union	Tulsa	Oklahoma.
SpiritBank	Tulsa	Oklahoma.
Welch State Bank	Welch	Oklahoma.

Federal Home Loan Bank of San Francisco—District 11

Mohave State Bank	Lake Havasua City	Arizona.
Mesa Bank	Mesa	Arizona.
Camelback Community Bank	Phoenix	Arizona.
Desert Schools Federal Credit Union	Phoenix	Arizona.
Salt River Project Credit Union	Phoenix	Arizona.
Valley Bank of Arizona	Phoenix	Arizona.
Valley First Community Bank	Scottsdale	Arizona.
Bank of Tucson	Tucson	Arizona.
Southern Arizona Community Bank	Tucson	Arizona.
Mt. Diablo National Bank	Danville	California.
Six Rivers National Bank	Eureka	California.
Humboldt Bank	Eureka	California.
First Security Bank of California, NA	Granada Hills	California.
Cathay Bank	Los Angeles	California.
General Bank	Los Angeles	California.
F&A Federal Credit Union	Monterey Park	California.
Stanford Federal Credit Union	Palo Alto	California.
CBC Federal Credit Union	Port Hueneme	California.
Gateway Bank, FSB	San Leandro	California.
First Bank of San Luis Obispo	San Luis Obispo	California.
Chinatrust Bank (U.S.A.)	Torrance	California.
Sun Country Bank	Victorville	California.
Visalia Community Bank	Visalia	California.
Bank of Walnut Creek	Walnut Creek	California.
Bank of Commerce	Henderson	Nevada.
Community Bank of Nevada	Las Vegas	Nevada.
Ensign Federal Credit Union	Las Vegas	Nevada.
Security State Savings Bank	Las Vegas	Nevada.
Northern Nevada Bank	Reno	Nevada.

Federal Home Loan Bank of Seattle—District 12

City Bank	Honolulu	Hawaii.
Hawaii USA Federal Credit Union	Honolulu	Hawaii.
Idaho Banking Company	Boise	Idaho.
The Farmers National Bank of Buhi	Buhl	Idaho.
Lewiston State Bank	Lewiston	Idaho.
Citizens State Bank	Hamilton	Montana.
Mountain West Bank of Kalispell	Kalispell	Montana.
Valley Bank of Kalispell	Kalispell	Montana.
First National Bank of Montana, Inc.	Libby	Montana.
First Technology Credit Union	Beaverton	Oregon.
Bank of the Cascades	Bend	Oregon.
Siuslaw Valley Bank	Eugene	Oregon.
Portland Area Community Employees CU	Portland	Oregon.
Umpqua Bank	Roseburg	Oregon.
Clackamas County Bank	Sandy	Oregon.
First National Bank of Morgan	Morgan	Utah.

Bank of Utah	Ogden	Utah.
Goldenwest Credit Union	Ogden	Utah.
Western Community Bank	Orem	Utah.
American Bank of Commerce	Provo	Utah.
Escrow Bank USA	Salt Lake City	Utah.
First Utah Bank	Salt Lake City	Utah.
Utah Central Credit Union	Salt Lake City	Utah.
Heritage Bank	St. George	Utah.
North County Bank	Arlington	Washington.
Industrial Credit of Whatcom County	Bellingham	Washington.
Cashmere Valley Bank	Cashmere	Washington.
Mt. Rainier National Bank	Enumclaw	Washington.
EverTrust Bank	Everett	Washington.
Northwest Plus Credit Union	Everett	Washington.
Verity Credit Union	Seattle	Washington.
Watermark Credit Union	Seattle	Washington.
First Heritage Bank	Snohomish	Washington.
Horizon Credit Union	Spokane	Washington.
Rainier Pacific Bank	Tacoma	Washington.
American National Bank of Cheyenne	Cheyenne	Wyoming.
Cheyenne-Laramie County Employees F.C.U.	Cheyenne	Wyoming.
Warren Federal Credit Union	Cheyenne	Wyoming.
Western Visa Federal Credit Union	Cheyenne	Wyoming.
State Bank of Green River	Green River	Wyoming.
Bank of Jackson Hole	Jackson	Wyoming.
Central Bank & Trust	Lander	Wyoming.
North Side State Bank of Rock Springs	Rock Springs	Wyoming.
First Federal Savings Bank	Sheridan	Wyoming.
Sheridan State Bank	Sheridan	Wyoming.

II. Public Comments

To encourage the submission of public comments on the community support performance of Bank members, on or before October 27, 2003, each Bank will notify its Advisory Council and nonprofit housing developers, community groups, and other interested parties in its district of the members selected for community support review in the 2002–03 seventh quarter review cycle. 12 CFR 944.2(b)(2)(ii). In reviewing a member for community support compliance, the Finance Board will consider any public comments it has received concerning the member. 12 CFR 944.2(d). To ensure consideration by the Finance Board, comments concerning the community support performance of members selected for the 2002–03 seventh quarter review cycle must be delivered to the Finance Board on or before the November 28, 2003 deadline for submission of Community Support Statements.

Dated: October 7, 2003.

Arnold Intrater,

General Counsel.

[FR Doc. 03–25785 Filed 10–9–03; 8:45 am].

BILLING CODE 6725–01–P

FEDERAL RESERVE SYSTEM

Change in Bank Control Notices; Acquisition of Shares of Bank or Bank Holding Companies

The notificants listed below have applied under the Change in Bank Control Act (12 U.S.C. 1817(j)) and § 225.41 of the Board's Regulation Y (12 CFR 225.41) to acquire a bank or bank holding company. The factors that are considered in acting on the notices are set forth in paragraph 7 of the Act (12 U.S.C. 1817(j)(7)).

The notices are available for immediate inspection at the Federal Reserve Bank indicated. The notices also will be available for inspection at the office of the Board of Governors. Interested persons may express their views in writing to the Reserve Bank indicated for that notice or to the offices of the Board of Governors. Comments must be received not later than October 24, 2003.

A. Federal Reserve Bank of Minneapolis (Richard M. Todd, Vice President and Community Affairs Officer) 90 Hennepin Avenue, Minneapolis, Minnesota 55480-0291:

1. Brian Dean Wolff, Adams, Minnesota; to gain control of Adams Bancshares, Inc., Adams, Minnesota, and thereby indirectly gain control of Farmers State Bank of Adams, Adams, Minnesota.

Board of Governors of the Federal Reserve System, October 6, 2003.

Robert deV. Frierson,

Deputy Secretary of the Board.

[FR Doc. 03–25677 Filed 10–9–03; 8:45 am]

BILLING CODE 6210–01–S

FEDERAL RESERVE SYSTEM

Formations of, Acquisitions by, and Mergers of Bank Holding Companies

The companies listed in this notice have applied to the Board for approval, pursuant to the Bank Holding Company Act of 1956 (12 U.S.C. 1841 *et seq.*) (BHC Act), Regulation Y (12 CFR Part 225), and all other applicable statutes and regulations to become a bank holding company and/or to acquire the assets or the ownership of, control of, or the power to vote shares of a bank or bank holding company and all of the banks and nonbanking companies owned by the bank holding company, including the companies listed below.

The applications listed below, as well as other related filings required by the Board, are available for immediate inspection at the Federal Reserve Bank indicated. The application also will be available for inspection at the offices of the Board of Governors. Interested persons may express their views in writing on the standards enumerated in the BHC Act (12 U.S.C. 1842(c)). If the proposal also involves the acquisition of a nonbanking company, the review also includes whether the acquisition of the

nonbanking company complies with the standards in section 4 of the BHC Act (12 U.S.C. 1843). Unless otherwise noted, nonbanking activities will be conducted throughout the United States. Additional information on all bank holding companies may be obtained from the National Information Center website at *www.ffiec.gov/nic/*.

Unless otherwise noted, comments regarding each of these applications must be received at the Reserve Bank indicated or the offices of the Board of Governors not later than November 3, 2003.

A. Federal Reserve Bank of Chicago (Phillip Jackson, Applications Officer) 230 South LaSalle Street, Chicago, Illinois 60690-1414:

1. Chemical Financial Corporation, Midland, Michigan; to acquire 30.89 percent of the voting shares of Caledonia Financial Corporation, Caledonia, Michigan, and thereby indirectly acquire State Bank of Caledonia, Caledonia, Michigan.

B. Federal Reserve Bank of Dallas (W. Arthur Tribble, Vice President) 2200 North Pearl Street, Dallas, Texas 75201-2272:

1. Tradition Bancshares, Inc., Houston, Texas; to acquire 100 percent of the voting shares of Katy Bank, N.A., Katy, Texas.

Board of Governors of the Federal Reserve System, October 6, 2003.

Robert deV. Frierson,

Deputy Secretary of the Board.

[FR Doc. 03–25676 Filed 10–9–03; 8:45 am]

BILLING CODE 6210–01–S

FEDERAL TRADE COMMISSION

Agency Information Collection Activities; Proposed Collection; Comment Request; Extension

AGENCY: Federal Trade Commission (FTC).

ACTION: Notice.

SUMMARY: The information collection requirements described below will be submitted to the Office of Management and Budget (OMB) for review, as required by the Paperwork Reduction Act (PRA). The FTC is seeking public comments on its proposal to extend through January 31, 2007 the current PRA clearance for information collection requirements contained in its Mail or Telephone Order Merchandise Trade Regulation Rule. That clearance expires on January 31, 2004.

DATES: Comments must be filed by December 9, 2003.

ADDRESSES: Send comments to Secretary, Federal Trade Commission, Room H–159, 600 Pennsylvania Ave., NW., Washington, DC 20580 or by e-mail to *pra-60-mailorderrule@ftc.gov,* as prescribed below. Submissions should include the submitter's name, address, telephone number and, if available, FAX number and e-mail address. All comments should be captioned ''Mail or Telephone Order Merchandise Trade Regulation Rule: Paperwork comment.''

FOR FURTHER INFORMATION CONTACT: Requests for additional information should be addressed to Joel N. Brewer, Attorney, Division of Enforcement, Bureau of Consumer Protection, Federal Trade Commission, Room NJ–2207, 601 New Jersey Ave., NW., Washington, DC 20580.

SUPPLEMENTARY INFORMATION: Under the PRA (44 U.S.C. 3501–3520), Federal agencies must obtain approval from OMB for each collection of information they conduct or sponsor. ''Collection of information'' means agency requests or requirements that members of the public submit reports, keep records, or provide information to a third party. 44 U.S.C. 3502(3), 5 CFR 1320.3(c). As required by section 3506(c)(2)(A) of the PRA, the FTC is providing this opportunity for public comment before requesting that OMB extend the existing paperwork clearance for the MTOR.

The FTC invites comments on: (1) Whether the proposed collection of information is necessary for the proper performance of the functions of the agency, including whether the information will have practical utility; (2) the accuracy of the agency's estimate of the burden of the proposed collection of information, including the validity of the methodology and assumptions used; (3) ways to enhance the quality, utility, and clarity of the information to be collected; and (4) ways to minimize the burden of the collection of information on those who are to respond, including through the use of appropriate automated, electronic, mechanical, or other technological collection techniques or other forms of information technology, *e.g.,* permitting electronic submission of responses.

If a comment contains nonpublic information, it must be filed in paper form, and the first page of the document must be clearly labeled ''confidential.''[1] Comments that do not contain any nonpublic information may instead be filed in electronic form (in ASCII format, WordPerfect, or Microsoft Word) as part of or as a attachment to e-mail messages directed to the following e-mail box: *pra-60-mailorderrule@ftc.gov.* Such comments will be considered by the Commission and will be available for inspection and copying at its principal office in accordance with Section 4.9(b)(6)(ii) of the Commission's Rules of Practice, 16 CFR section 4.9(b)(6)(ii).

The Mail Order Merchandise Trade Regulation Rule 16 CFR part 435 (OMB Control Number: 3084–0106) (''MOR''), was promulgated in 1975 in response to consumer complaints that many merchants were failing to ship mail order merchandise on time, failing to ship at all, or failing to provide prompt refunds for unshipped merchandise. The MOR took effect on February 2, 1976. A second rulemaking proceeding in 1993 demonstrated that the delayed shipment and refund problems of the mail order industry were also being experienced by consumers who ordered merchandise over the telephone. The Commission amended the MOR, effective on March 1, 1994, to include merchandise ordered by telephone, including by telefax or by computer through the use of a modem, and renamed the Rule ''Mail or Telephone Order Merchandise'' (''MTOR'' or ''Rule''). The Rule therefore includes orders placed through the Internet.

Generally, the MTOR requires a merchant to: (1) Have a reasonable basis for any express or implied shipment representation made in soliciting the sale; (2) ship within the time period promised and, if no time period is promised, within 30 days; (3) notify the consumer and obtain the consumer's consent to any delay in shipment; and (4) make prompt and full refunds when the consumer exercises a cancellation option or the merchant is unable to meet the Rule's other requirements.

The notice provisions in the MTOR require a merchant who is unable to ship within the promised shipment time or 30 days to notify the consumer of a revised date and his or her right to cancel the order and obtain a prompt refund. Delays beyond the revised shipment date also trigger a notification requirement to consumers. When the Rule requires the merchant to make a refund and the consumer has paid by credit card, the Rule also requires the merchant to notify the consumer either that any charge to the consumer's charge account will be reversed or that the merchant will take no action that will result in a charge.

Burden statment:

[1] FTC Rule 4.2(d), 16 CFR 4.2(d). The comment must also be accompanied by an explicit request for confidential treatment, including the factual and legal basis for the request, and must identify the specific portions of the comment to be withheld from the public record. The request will be granted or denied by the Commission's General Counsel, consistent with applicable law and the public interest. *See* FTC Rule 4.9(c), 16 CFR 4.9(c).

Estimated total annual hours burden: 3,094,000 hours (rounded up to the nearest thousand).

In its 2000 PRA notice and submission to OMB regarding the Rule, FTC staff estimated that 45,919 established companies each spend an average of 50 hours per year on compliance with the Rule, and that approximately 1,985 new industry entrants spend an average of 230 hours (an industry estimate) for compliance measures associated with start-up [2] 65 FR 77031 (December 8, 2000). Thus, the total estimated hours burden was 2,753,000 hours, rounded up to the nearest thousand [(45,919 × 50 hours) + (1,985 × 230 hours)].

No provisions in the Rule have been amended or changed since staff's prior submission to OMB. Thus, the Rule's disclosure and notification requirements remain the same. Since then, however, the number of businesses engaged in the sale of merchandise by mail or by telephone has increased. Based on the U.S. Department of Commerce 2002 Statistical Abstract,[3] approximately 53,600 establishments are now subject to the Rule. The staff attributes much of this growth to brick-and-mortar retailers expanding into electronic shopping, and the continued entry of ''dot.com'' merchants into the retail industry.

Conversely, based on the 2002 Statistical Abstract data, staff is reducing its estimate of new businesses per year from 1,985 to 1,800. Thus, the current total of affected entities is approximately 55,400 (established and new businesses).

Accordingly, staff estimates total industry hours to comply with the MTOR is 3,094,000 hours [(53,600 × 50 hours) + (1,800 × 230 hours)].

This is a conservative estimate. Arguably much of the estimated time burden for disclosure-related compliance would be incurred even absent the Rule. Industry trade associations and individual witnesses have consistently taken the position that compliance with the MTOR is widely regarded by direct marketers as being good business practice. The Rule's notification requirements would be followed in any event by most merchants to meet consumer expectations regarding timely shipment, notification of delay, and prompt and full refunds. Providing consumers with notice about the status of their orders fosters consumers loyalty and encourages repeat purchases, which are important to direct marketers' success. Thus, it appears that much of the time and expense associated with Rule compliance may not constitute ''burden'' under the PRA [4] although the above estimates account for it as such.

The mail-order industry has been subject to the basic provisions of the Rule since 1976 and the telephone-order industry since 1994. Thus, businesses have had several years (and some have had decades) to integrate compliance systems into their business procedures. Since staff's preceding PRA submission to OMB for the Rule, many businesses have upgraded the information management systems they need, in part, to comply with the Rule, and to track orders more effectively. These upgrades, however, were needed to deal with growing consumer demand for merchandise resulting, in part, from increased public acceptance of making purchases over the telephone and, more recently, the Internet.

Accordingly, most companies now maintain records and provide updated order information of the kind required by the Rule in their ordinary course of business. Nevertheless, staff continues to conservatively assume that the time devoted to compliance with the Rule by existing and new companies remains unchanged from its preceding estimate.

Estimated labor costs: $51,825,000, rounded to the nearest thousand.

Labor costs are derived by applying appropriate hourly cost figures to the burden hours described above. According to the 2002 Statistical Abstract, average payroll for ''electronic shipping and mail order houses,'' ''direct selling establishments,'' and ''other direct selling establishments'' rose from $14.41 per hour in 1999 to $15.19 per hour in 2000, an increase of $0.78 per hour. Assuming average payroll continued to increase $0.78 per hour per year, average payroll in 2002 would have reached $16.75 per hour. Because the bulk of the burden of complying with the MTOR is borne by clerical personnel, staff believes that the average hourly payroll figure for electronic shipping and mail order houses and direct selling establishments is an appropriate measure of a direct marketer's average labor cost to comply with the Rule. Thus, the total annual labor cost to new and established businesses in 2002 for MTOR compliance is approximately $51,825,000 (3,094,000 hours × $16.75/hr.). Relative to direct industry sales, this total is negligible.[5]

Estimated annual non-labor cost burden: $0 or minimal.

The applicable requirements impose minimal start-up costs, as businesses subject to the Rule generally have or obtain necessary equipment for other business purposes, *i.e.,* inventory and order management, and customer relations. For the same reason, staff anticipates printing and copying costs to be minimal, especially given that telephone order merchants have increasingly turned to electronic communications to notify consumers of delay and to provide cancellation options. Staff believes that the above requirements necessitate ongoing, regular training so that covered entities stay current and have a clear understanding of federal mandates, but that this would be a small portion of and subsumed within the ordinary training that employees receive apart from that associated with the information collected under the Rule.

William E. Kovacic,

General Counsel.

[FR Doc. 03–25792 Filed 10–9–03; 8:45 am]

BILLING CODE 6750–01–M

[2] Most of the estimated start-up time relates to the development and installation of computer systems geared to more efficiently handle customer orders.

[3] Statistical Abstract of the United States, 122nd edition, 2002, U.S. Department of Commerce, Economics and Statistics Administration, Table 1000, ''Retail Trade—Establishments, Employees and Payroll: 1999 and 2000.'' This is the most recent edition currently available.

[4] Under the OMB regulation implementing the PRA, burden is defined to exclude any effort that would be expended regardless of any regulatory requirements. 5 CFR 1320.3(b)(2).

[5] Projecting sales for ''electronic shopping and mail-order houses,'' ''direct selling establishments,'' and ''other direct selling establishments'' (according to the 2002 Statistical Abstract) to all merchants subject to the MTOR, staff estimates that total direct sales to consumers in 2002 to have been $124.88 billion. Thus, the labor cost for compliance by existing and new businesses in 2002 would have amounted to .042% of sales.

FEDERAL TRADE COMMISSION

Granting of Request for Early Termination of the Waiting period Under Premerger Notification Rules

Section 7A of the Clayton Act, 15 U.S.C. 18a, is added by Title II of the Hart-Scott-Rodino Antitrust Improvements Act of 1976, requires persons contemplating certain mergers or acquisitions to give Federal Trade Commission and the Assistant Attorney General advance notice and to wait designated periods before consummation of such plans. Section 7A(b)(2) of the Act permits the agencies, in individual cases, to terminate this waiting period prior to its expiration and requires that notice of this action be published in the **Federal Register**.

The following transactions were granted early termination of the waiting period provided by law and the

premerger notification rules. The grants were made by the Federal Trade Commission and the Assistant Attorney General for the Antitrust Division of the Department of Justice. Neither agency intends to take any action with respect to these proposed acquisitions during the applicable waiting period.

TRANSACTION GRANTED EARLY TERMINATION

ET date	Trans No.	ET req status	Party name
25–AUG–03	20030875	G	Euro-Pro Holdings LLC
		G	Mark Rosenzweig
		G	Euro-Pro Corporation
		G	Omega Sewmac, Inc.
		G	Stanro-EP Corp.
	20030878	G	Fast Retailing Co., Ltd.
		G	Andrew Rosen
		G	Theory California Holding Inc.
		G	R&T LLC
		G	Theory Retail Holding LLC
		G	Theory International, LLC
		G	Theory LLC
	20030879	G	Fast Retailing Co., Ltd.
		G	Elie Tahari
		G	Theory California Holding Inc.
		G	R&T LLC
		G	Theory International, LLC
		G	Theory Retail Holding LLC
		G	Theory LLC
	20030880	G	Contech Holdings Corporation
		G	Kirtland Capital Partners III L.P.
		G	PDM Bridge, LLC
	20030891	G	Jarden Corporation
		G	American Manufacturing Corporation
		G	Lehigh Consumer Products Corporation
	20030892	G	Alloy, Inc.
		G	dELiA*s Corp.
		G	dELiA*s Corp.
	20030894	G	Tellium, Inc.
		G	Zhone Technologies, Inc.
		G	Zhone Technologies, Inc.
26–AUG–03	20030708	G	KAP Global Publishers, S.A.
		G	Mr. Reinhard Mohn.
		G	City Data GmbH.
	20030866	G	Clay M. Biddinger.
		G	Comidisco Holding Company, Inc.
		G	Comidisco, Inc.
	20030889	G	Arsenal Capital Partners Qualified Purchaser Fund LP.
		G	Cambrex Corporation.
		G	CasChem, Inc.
		G	Heico Chemicals, Inc.
		G	Nepera, Inc.
		G	Nepcam, Inc.
		G	Zeeland Chemicals, Inc.
27–AUG–03	20030843	G	UniFirst Corporation.
		G	Textilease Corporation.
		G	Textilease Corporation.
28–AUG–03	20030872	G	Eastman Kodak Company.
		G	PracticeWorks, Inc.
		G	PracticeWorks, Inc.
29–AUG–03	20030882	G	Thomson, S.A.
		G	Thomson, S.A.
		G	Technicolor Digital Cinema, LLC.
	20030893	G	Interwoven, Inc.
		G	iManage, Inc.
		G	iManage, Inc.
	20030899	G	Michael Watts and Cynthia Watts.
		G	Michael Watts and Cynthia Watts.
		G	Sunstate Equipment Co., LLC.
	20030901	G	Vestar-AIV Holdings A L.P.
		G	FL Selenia S.a.r.l.
		G	FL Selenia S.p.A.
03–SEP–03	20030796	G	Bain Capital Fund VII, L.P.
		G	Linsalata Capital Partners Fund III, L.P.
		G	Alpha Shirt Holdings, Inc.
	20030888	G	Patterson Dental Company
		G	AbilityOne Products Corporation

TRANSACTION GRANTED EARLY TERMINATION—Continued

ET date	Trans No.	ET req status	Party name
		G	AbilityOne Products Corporation
09–SEP–03	20030897	G	Mr. Robert Mathys, Jr.
		G	Synthes-Stratec, Inc.
		G	Synthes-Stratec, Inc.
03–SEP–03	20030900	G	New SAC
03–SEP–03		G	Business Objects, S.A.
		G	Business Objects, S.A.
03–SEP–03	20030902	G	Amcor Limited
		G	Rexam PLC
		G	Rexam Healthcare Flexibles, Inc.
	20030910	G	Cascades, Inc.
		G	Edward P. Fitts, Jr.
		G	Dopaco, Inc.
03–SEP–03	20030911	G	Susquehanna Pfaltzgraff Co.
		G	RCN Corporation
		G	RCN Telecom Services, Inc.
	20030912	G	Delta Apparel, Inc.
		G	M.J. Soffe Co.
		G	M.J. Soffe Co.
	20030914	G	Rayovac Corporation
		G	Ellen Kiam
		G	Remington Products Company, LLC
	20030915	G	Leucadia National Corporation
		G	WilTel Communications Group, Inc.
		G	WilTel Communications Group, Inc.
	20030924	G	FMR Corp.
		G	International Business Machines Corporation
		G	International Business Machines Corporation
	20030925	G	Koyo Seiko Co., Ltd.
		G	Northrop Grumman Corporation
		G	TRW Koyo Steering Systems Company
	20030929	G	RFE Investment Partners VI, L.P.
		G	MSP Holding LLC
		G	McKenzie Sports Products, Inc.
11–SEP–03	20030903	G	Crunch Equity Holding, LLC
		G	Hicks, Muse, Tate & Furst Equity Fund V, L.P.
		G	Pinnacle Foods Holdings Corporation
	20030926	G	McDATA Corporation
		G	Sanera Systems, Inc.
		G	Sanera Systems, Inc.
	20030928	G	Nabco Ltd.
		G	Teijin Limited
		G	Teijin Seiki Co., Ltd.
15–SEP–03	20030913	G	TECO Energy, Inc.
		G	TECO Energy, Inc.
		G	Panda Development Corporation
		G	PLC Development Holdings, LLC
	20030918	G	GTCR Fund VIII, L.P.
		G	TECO Energy, Inc.
		G	Hardee Power Partners, Limited
	20030931	G	Wendy's International, Inc.
		G	Orlando Foods, Ltd.
		G	Orlando Foods, Ltd.
	20030933	G	LandAmerica Financial Group, Inc.
		G	Lereta Corp.
		G	Lereta Corp.
	20030934	G	H&R Block, Inc.
		G	Monte C. and Viola S. Nelson, Husband and Wife
		G	Block Mountain West, Inc.
	20030939	G	DLJ Merchant Banking Partners, III L.P.
		G	Kenneth R. Thomson
		G	Thomson Healthcare, Inc.
	20030940	G	Fiserv, Inc.
		G	Mason Wells Leveraged Buyout Fund I, Limited Partnership
		G	GAC Holdings Corporation
	20030943	G	SKM Equity Fund III, L.P.
		G	Pfingsten Executive Fund II, L.P.
		G	Norcraft Companies, L.L.C.
	20030945	G	CAR Acquisition Company LLC
		G	ANC Rental Corporation
		G	ANC Rental Corporation

TRANSACTION GRANTED EARLY TERMINATION—Continued

ET date	Trans No.	ET req status	Party name
	20030948	G	His Highness General Sheikh Mohammed bin Rashid Al Maktoum
		G	Mariner Health Care, Inc.
		G	MHC/LCA Florida, Inc.
		G	Mariner Health Care of Palm City, Inc.
		G	Mariner Health Care of Pinellas Point, Inc.
		G	Mariner Health of Orlando, Inc.
		G	Tampa Medical Associates, Inc.
		G	Mariner Health of Jacksonville, Inc.
		G	Mariner Health of Florida, Inc.
		G	Mariner Health at Bonifay, Inc.
15–SEP–03	20030948	G	Mariner Health Properties IV, Ltd.
		G	Mariner Health of Palmetto, Inc.
		G	Mariner Health Care of Atlantic Shores, Inc.
		G	Mariner Health Care of MacClenny, Inc.
		G	Mariner Health Care of Inverness, Inc.
		G	Mariner Health Care of Metrowest, Inc.
		G	Mariner Health Care of Tuskawilla, Inc.
		G	MHC/CSI Florida, Inc.
		G	Mariner Health Care of Lake Worth, Inc.
		G	Mariner Health Care of Port Orange, Inc.
		G	Mariner Health Care of Orange City, Inc.
16–SEP–03	20030908	G	Getinge AB
		G	Siemens Aktiengesellschaft
		G	ServoCare Systems AB
		G	SBA Life Supporting Systems S.p.A.

FOR FURTHER INFORMATION CONTACT: Sandra M. Peay, Contact Representative, or Renee Hallman, Legal Technician, Federal Trade Commission, Premerger Notification Office, Bureau of Competition, Room H–303, Washington, DC 20580, (202) 326–3100.

By Direction of the Commission.

Donald S. Clark,

Secretary.

[FR Doc. 03–25793 Filed 10–9–03; 8:45 am]

BILLING CODE 6750–01–M

DEPARTMENT OF HEALTH AND HUMAN SERVICES

Centers for Disease Control and Prevention

[60Day–04–02]

Proposed Data Collections Submitted for Public Comment and Recommendations

In compliance with the requirement of section 3506(c)(2)(A) of the Paperwork Reduction Act of 1995 for opportunity for public comment on proposed data collection projects, the Centers for Disease Control and Prevention (CDC) will publish periodic summaries of proposed projects. To request more information on the proposed projects or to obtain a copy of the data collection plans and instruments, call the CDC Reports Clearance Officer on (404) 498–1210.

Comments are invited on: (a) Whether the proposed collection of information is necessary for the proper performance of the functions of the agency, including whether the information shall have practical utility; (b) the accuracy of the agency's estimate of the burden of the proposed collection of information; (c) ways to enhance the quality, utility, and clarity of the information to be collected; and (d) ways to minimize the burden of the collection of information on respondents, including through the use of automated collection techniques or other forms of information technology. Send comments to Seleda Perryman, CDC Assistant Reports Clearance Officer, 1600 Clifton Road, MS–D24, Atlanta, GA 30333. Written comments should be received within 60 days of this notice.

Proposed Project: Childhood Lead Poisoning Prevention Program Quarterly Report (OMB No. 0920–0282)—Renewal—National Center for Environmental Health (NCEH), Centers for Disease Control and Prevention (CDC).

Lead poisoning is the most common and societally devastating environmental disease of young children in the United States. The adverse health effects of lead on young children can be profound. Severe lead exposure can cause coma, convulsions, and even death. Lower levels of lead, which rarely cause symptoms, can result in decreased intelligence, developmental disabilities, behavioral disturbances, and disorders of blood production. In 1992, the Centers for Disease Control and Prevention (CDC) began the National Childhood Lead Surveillance Program at the National Center for Environmental Health (NCEH). The goals of the childhood lead surveillance program are to: (1) Establish childhood lead surveillance systems at the state and national levels; (2) use surveillance data to estimate the extent of elevated blood-lead levels among children; (3) assess the follow-up of children with elevated blood-lead levels; (4) examine potential sources of lead exposure; and (5) help allocate resources for lead poisoning prevention activities.

The quarterly report is designed to collect blood lead screening and test confirmation data from CDC-funded programs. The quarterly report consists of four data tables requiring the following information: (1) The number of children screened by age and Medicaid enrollment status; (2) the number of children screened and confirmed by blood lead level; (3) the number of children screened by ethnicity; and (4) the number of children screened by race.

Respondents	Number of respondents	Responses/ respondent	Average burden/respondent (in hours)	Total burden (in hours)
State and Local Grant and Cooperative Agreement Programs	42	4	2	336
Total	42			336

Dated: October 6, 2003.

Nancy E. Cheal,

Acting Associate Director for Policy, Planning and Evaluation, Centers for Disease Control and Prevention.

[FR Doc. 03–25694 Filed 10–9–03; 8:45 am]

BILLING CODE 4163–18–P

DEPARTMENT OF HEALTH AND HUMAN SERVICES

Centers for Disease Control and Prevention

[60Day–04–01]

Proposed Data Collections Submitted for Public Comment and Recommendations

In compliance with the requirement of Section 3506(c)(2)(A) of the Paperwork Reduction Act of 1995 for opportunity for public comment on proposed data collection projects, the Centers for Disease Control and Prevention (CDC) will publish periodic summaries of proposed projects. To request more information on the proposed projects or to obtain a copy of the data collection plans and instruments, call the CDC Reports Clearance Officer on (404) 498–1210.

Comments are invited on: (a) Whether the proposed collection of information is necessary for the proper performance of the functions of the agency, including whether the information shall have practical utility; (b) the accuracy of the agency's estimate of the burden of the proposed collection of information; (c) ways to enhance the quality, utility, and clarity of the information to be collected; and (d) ways to minimize the burden of the collection of information on respondents, including through the use of automated collection techniques or other forms of information technology. Send comments to Seleda Perryman, CDC Assistant Reports Clearance Officer, 1600 Clifton Road, MS–D24, Atlanta, GA 30333. Written comments should be received within 60 days of this notice.

Proposed Project: Survey Of Chronic Fatigue Syndrome And Chronic Unwellness in Georgia—New—National Center for Infectious Diseases (NCID), Centers for Disease Control and Prevention (CDC).

Congress commissioned CDC to develop research that estimates the magnitude of chronic fatigue syndrome (CFS) in the United States with special consideration of under-served populations (children and racial/ethnic minorities); describe the clinical features of CFS; and identify risk factors and diagnostic markers. CDC is currently planning a study in Georgia to estimate the prevalence of CFS and other fatigue illnesses and to determine whether or not there are differences in occurrence of fatigue illness across metropolitan, urban, rural populations and in racial and ethnic populations.

In 2001, OMB approved the information collection, *National Telephone Survey of Chronic Fatigue Syndrome,* under OMB Number 0920–0498. In July 2001, CDC conducted a pilot survey to determine feasibility of a national study and to test procedures for this national survey of CFS. The pilot study showed that clinical evaluation to confirm classification of CFS was not practical on a national level, and the planned follow-on national survey was not conducted.

CDC has since modified the concept of the *National Survey of CFS* by limiting data collection to one southern U.S. state (Georgia). This modified research is better able to serve the objectives of the *National Survey of CFS* and additional CDC objectives. Reasons supporting this statement are listed below.

• *Logistics.* A difficulty in the *Pilot Test* was matching subjects and physicians for clinical evaluations because subjects were scattered across the continent. Focusing on a single state allows operation of regional clinics and greater opportunities for collaboration between and among CDC, Emory University, and consultants.

• *Metropolitan, urban, and rural differences. Pilot Test* results suggest no regional differences in the occurrence of CFS-like illnesses between and among the Midwest, south, west, and northeast, so concentrating on one state (Georgia) should provide more generalized information. *Pilot Test* findings suggested that further exploration of urban and rural differences might prove useful. Again, Georgia well-serves such a study with a major metropolitan center (Atlanta), urban areas (Macon and Warner Robins), and rural populations (in counties surrounding Macon) with well-defined regional differences.

• *Racial/ethnic differences.* The prevalence of CFS in other than the white population has not been definitively measured, although some studies indicate CFS prevalence in minority populations may be higher than generally thought. Georgia has well-characterized urban and rural as well as white, black, and Hispanic populations of varying socioeconomic status living in the regions to be studied. The presence of these populations is ideal for public health surveys. Taken together, the proposed Georgia survey will produce estimates of the prevalence of CFS in metropolitan, urban, and rural populations and will elucidate racial/ethnic differences in CFS in these populations.

The proposed study replicates the Sedgwick County Study and the *National Pilot Test* using similar methodology and data collection instruments. The study begins with a random-digit-dialing telephone survey to identify fatigued, unwell, and well individuals, followed by detailed telephone interviews to obtain additional data on participant health status. As a result of the telephone interviews, eligible subjects will be asked to participate in clinical evaluations. CDC will estimate the prevalence of CFS and other fatigue illnesses in metropolitan, urban, and rural Georgia and in racial and ethnic populations. CDC will compare prevalence estimates from this proposed study of the Georgia population to estimates obtained for Sedgwick County to ascertain whether or not Sedgwick County findings can be generalized to other populations. There is no cost to respondents.

Respondents	Number of respondents	Number responses/respondent	Avg. burden/response (in hours)	Total burden (in hours)
Screener interview	19,344	1	5/60	1,612
Telephone interview	8,000	1	30/60	4,000
Total	27,344			5,612

Dated: October 3, 2003.

Nancy E. Cheal,

Acting Associate Director for Policy, Planning and Evaluation, Centers for Disease Control and Prevention.

[FR Doc. 03–25695 Filed 10–9–03; 8:45 am]

BILLING CODE 4163–18–P

DEPARTMENT OF HEALTH AND HUMAN SERVICES

Centers for Medicare and Medicaid Services

[Document Identifier: CMS–10091 and CMS–R–299]

Agency Information Collection Activities: Proposed Collection; Comment Request

AGENCY: Centers for Medicare and Medicaid Services, HHS.

In compliance with the requirement of section 3506(c)(2)(A) of the Paperwork Reduction Act of 1995, the Centers for Medicare and Medicaid Services (CMS) (formerly known as the Health Care Financing Administration (HCFA)), Department of Health and Human Services, is publishing the following summary of proposed collections for public comment. Interested persons are invited to send comments regarding this burden estimate or any other aspect of this collection of information, including any of the following subjects: (1) The necessity and utility of the proposed information collection for the proper performance of the agency's functions; (2) the accuracy of the estimated burden; (3) ways to enhance the quality, utility, and clarity of the information to be collected; and (4) the use of automated collection techniques or other forms of information technology to minimize the information collection burden.

1. *Type of Information Collection Request:* Extension of a currently approved collection.

Title of Information Collection: UPIN (Unique Physician Identification Number) Participating Physicians Directory.

Form No.: CMS–10091(OMB# 0938–0905).

Use: In November of 2000, CMS launched the Participating Physicians Directory on *http://www.medicare.gov.* This particular directory was created to provide beneficiaries with the names, addresses, and specialties of Medicare participating physicians who have agreed to accept assignment on all Medicare claims and covered services. CMS is adding information from already existing sources; in addition, CMS wants to collect a new data element ''Accepting New Patients Indicator'' which is essential to a beneficiary's search for a physician.

Frequency: On occasion.

Affected Public: Business or other for-profit.

Number of Respondents: 10,980.

Total Annual Responses: 10,980.

Total Annual Hours: 915.

2. *Type of Information Collection Request:* Revision of a currently approved collection.

Title of Information Collection: A project to Develop an Outcome-Based Continuous Quality Improvement System and Core Outcome and Comprehensive Assessment Data Set for PACE.

Form No.: CMS–R–299 (OMB# 0938–0791).

Use: The purpose of this project is to develop an outcome-based continuous quality improvement (OBCQI) system and core comprehensive assessment data set for the PACE program by (a) developing and testing a set of data items for core outcome and comprehensive assessment (COCOA), (b) testing risk-adjustment methods so each site's outcomes can be appropriately evaluated, (c) designing an OBCQI approach to improve quality in a systematic, evolutionary manner, and (d) testing the usefulness of the data items for assessment and care planning. A three-phase field test will result in the refinement of the draft COCOA data items and protocols needed. Findings from the project are intended to guide the possible implementation of a national approach for OBCQI and core comprehensive assessment for PACE.

Frequency: On occasion and Semi-annually.

Affected Public: Individuals or Households and Not-for-profit institutions.

Number of Respondents: 8,320.

Total Annual Responses: 116,038.

Total Annual Hours: 16,959.98.

To obtain copies of the supporting statement and any related forms for the proposed paperwork collections referenced above, access CMS's Web site address at *http://cms.hhs.gov/regulations/pra/default.asp,* or e-mail your request, including your address, phone number, OMB number, and CMS document identifier, to *Paperwork@hcfa.gov,* or call the Reports Clearance Office on (410) 786–1326. Written comments and recommendations for the proposed information collections must be mailed within 60 days of this notice directly to the CMS Paperwork Clearance Officer designated at the following address: CMS, Office of Strategic Operations and Regulatory Affairs, Division of Regulations Development and Issuances, Attention: Melissa Musotto, Room C5–14–03, 7500 Security Boulevard, Baltimore, Maryland 21244–1850.

Dated: October 2, 2003.

Dawn Willinghan,

CMS Reports Clearance Officer, Office of Strategic Operations and Strategic Affairs, Division of Regulations Development and Issuances.

[FR Doc. 03–25764 Filed 10–9–03; 8:45 am]

BILLING CODE 4120–03–P

DEPARTMENT OF HEALTH AND HUMAN SERVICES

Centers for Medicare and Medicaid Services

[Document Identifier: CMS–2649, CMS–730 and CMS–80]

Agency Information Collection Activities: Submission for OMB Review; Comment Request

AGENCY: Centers for Medicare and Medicaid Services, HHS.

In compliance with the requirement of section 3506(c)(2)(A) of the Paperwork Reduction Act of 1995, the Centers for Medicare and Medicaid Services (CMS) (formerly known as the Health Care Financing Administration (HCFA), Department of Health and Human Services, is publishing the

following summary of proposed collections for public comment. Interested persons are invited to send comments regarding this burden estimate or any other aspect of this collection of information, including any of the following subjects: (1) The necessity and utility of the proposed information collection for the proper performance of the agency's functions; (2) the accuracy of the estimated burden; (3) ways to enhance the quality, utility, and clarity of the information to be collected; and (4) the use of automated collection techniques or other forms of information technology to minimize the information collection burden.

1. *Type of Information Collection Request:* Extension of a currently approved collection.

Title of Information Collection: Request for Reconsideration of Part A Medicare Claims and Supporting Regulations in 42 CFR, 405.711.

Form No.: CMS–2649 (OMB# 0938–0045).

Use: Section 1869 of the Social Security Act authorizes a hearing for any individual who is dissatisfied with the intermediary's determination or amount of benefit paid. This form is used so that a party may request a reconsideration of the initial determination.

Frequency: Monthly, Quarterly, Annually.

Affected Public: Individuals or Households and Not-for-profit institutions.

Number of Respondents: 60,000.

Total Annual Responses: 60,000.

Total Annual Hours: 15,000.

2. *Type of Information Collection Request:* Extension of a currently approved collection.

Title of Information Collection: Employee Building Pass Application and File.

Form No.: CMS–730 & CMS–80 (OMB# 0938–0812).

Use: The purpose of this system is to control United States Government Building Passes issued to all Centers for Medicare & Medicaid Services (CMS) employees and non-CMS employees who require continuous access to CMS buildings in Baltimore and other CMS and HHS Buildings.

Frequency: As needed.

Affected Public: Federal Government and Business or other for-profit.

Number of Respondents: 2000.

Total Annual Responses: 2000.

Total Annual Hours: 500.

To obtain copies of the supporting statement and any related forms for the proposed paperwork collections referenced above, access CMS Web site address at *http://cms.hhs.gov/regulations/pra/default.asp,* or E-mail your request, including your address, phone number, OMB number, and CMS document identifier, to *Paperwork@hcfa.gov,* or call the Reports Clearance Office on (410) 786–1326. Written comments and recommendations for the proposed information collections must be mailed within 30 days of this notice directly to the OMB desk officer: OMB Human Resources and Housing Branch, Attention: Brenda Aguilar, New Executive Office Building, Room 10235, Washington, DC 20503.

Dated: October 2, 2003.

Dawn Willinghan,

CMS Reports Clearance Officer, Office of Strategic Operations and Strategic Affairs, Division of Regulations Development and Issuances.

[FR Doc. 03–25765 Filed 10–9–03; 8:45 am]

BILLING CODE 4120–03–P

DEPARTMENT OF HEALTH AND HUMAN SERVICES

Food and Drug Administration

[Docket No. 2003N–0311]

Agency Information Collection Activities; Submission for Office of Management and Budget Review; Comment Request; Medical Device User Fee and Modernization Act Small Business Qualification Certification (Form FDA 3602)

AGENCY: Food and Drug Administration, HHS.

ACTION: Notice.

SUMMARY: The Food and Drug Administration (FDA) is announcing that the proposed collection of information listed below has been submitted to the Office of Management and Budget (OMB) for review and clearance under the Paperwork Reduction Act of 1995.

DATES: Submit written comments on the collection of information by November 10, 2003.

ADDRESSES: OMB is still experiencing significant delays in the regular mail, including first class and express mail, and messenger deliveries are not being accepted. To ensure that comments on the information collection are received, OMB recommends that written comments be faxed to the Office of Information and Regulatory Affairs, OMB, Attn: Fumie Yokota, Desk Officer for FDA, FAX: 202–395–6974.

FOR FURTHER INFORMATION CONTACT: Peggy Robbins, Office of Management Programs (HFA–250), Food and Drug Administration, 5600 Fishers Lane, Rockville, MD 20857, 301–827–1223.

SUPPLEMENTARY INFORMATION:

In compliance with 44 U.S.C. 3507, FDA has submitted the following proposed collection of information to OMB for review and clearance.

MDUFMA Small Business Qualification Certification (Form FDA 3602)—(OMB Control Number 0910–0508)—Extension

Medical Device User Fee and Modernization Act (MDUFMA) amends the Federal Food, Drug, and Cosmetic Act to provide for user fees for certain medical device applications. The initial fees (for fiscal year (FY) 2003) are set by statute; FDA will publish a **Federal Register** notice by August 1, 2003, announcing the fees for FY 2004. To avoid harming small businesses, MDUFMA provides for reduced or waived fees for applicants who qualify as a ''small business.'' This means there are two levels of fees, a standard fee, and a reduced or waived small business fee.

Presently, a ''small business'' is an applicant who reported no more than $30 million ''gross receipts or sales'' on its Federal income tax return for the most recent tax year; the applicant must count the ''gross receipts or sales'' of all of its affiliates, partners, or parent firms when calculating whether it meets the $30 million threshold. An applicant must pay the full standard fee unless it provides evidence demonstrating to FDA that it meets the ''small business'' criteria. The evidence required by MDUFMA is a copy of the most recent Federal income tax return of the applicant, and any affiliate, partner, or parent firm. FDA will review these materials and decide whether an applicant is a ''small business'' within the meaning of MDUFMA.

Form FDA 3602 will be available in a forthcoming guidance document, ''MDUFMA Small Business Qualification Worksheet and Certification.'' This guidance will describe the criteria FDA will use to decide whether an entity qualifies as a MDUFMA small business and will help prospective applicants understand what they need to do to meet the small business criteria for FY 2004 and subsequent fiscal years. FDA will publish this guidance by August 1, 2003.

Respondents will be businesses or other for-profit organizations.

In the **Federal Register** of July 18, 2003 (68 FR 42742), FDA published a 60-day notice requesting public comment on the information collection provisions. No comments were received.

FDA estimates the burden for this collection of information as follows:

TABLE 1.—ESTIMATED ANNUAL REPORTING BURDEN[1]

FDA Form Number	No. of Respondents	Annual Frequency per Response	Total Annual Responses	Hours per Response	Total Hours
3602	3,000	1	3,000	1	3,000

[1]There are no capital costs or operating and maintenance costs associated with this collection of information.

FDA based these estimates on conversations with industry, trade association representatives, and from internal FDA estimates. This represents FDA's estimate on the number of small businesses that will submit a premarket notification, a premarket application, a premarket report, a panel track supplement, efficacy supplement, 180-day supplement, or a real time supplement to FDA during a single fiscal year from FY 2004 through 2007.

Dated: October 6, 2003.

Jeffrey Shuren,

Assistant Commissioner for Policy.

[FR Doc. 03–25752 Filed 10–9–03; 8:45 am]

BILLING CODE 4160–01–S

DEPARTMENT OF HEALTH AND HUMAN SERVICES

Food and Drug Administration

[Docket No. 2003N–0016]

Agency Information Collection Activities; Announcement of Office of Management and Budget Approval; The FDA Medical Products Reporting Program

AGENCY: Food and Drug Administration, HHS.

ACTION: Notice.

SUMMARY: The Food and Drug Administration (FDA) is announcing that a collection of information entitled ''The FDA Medical Products Reporting Program'' has been approved by the Office of Management and Budget (OMB) under the Paperwork Reduction Act of 1995.

FOR FURTHER INFORMATION CONTACT: Karen L. Nelson, Office of Management Programs (HFA–250), Food and Drug Administration, 5600 Fishers Lane, Rockville, MD 20857, 301–827–1482.

SUPPLEMENTARY INFORMATION: In the **Federal Register** of April 29, 2003 (FR 68 22716), the agency announced that the proposed information collection had been submitted to OMB for review and clearance under 44 U.S.C. 3507. An agency may not conduct or sponsor, and a person is not required to respond to, a collection of information unless it displays a currently valid OMB control number. OMB has now approved the information collection and has assigned OMB control number 0910–0291.

As requested by the agency, in addition to the approval of the revised forms, the existing forms are approved for continued use for the next 6 months to allow for the industry to make necessary changes to their computerized systems. The approval expires on March 31, 2005. A copy of the supporting statement for this information collection is available on the Internet at *http://www.fda.gov/ohrms/dockets.*

Dated: October 6, 2003.

Jeffrey Shuren,

Assistant Commissioner for Policy.

[FR Doc. 03–25753 Filed 10–9–03; 8:45 am]

BILLING CODE 4160–01–S

DEPARTMENT OF HEALTH AND HUMAN SERVICES

Food and Drug Administration

[Docket No. 2003N–0456]

Agency Information Collection Activities; Proposed Collection; Comment Request; Prevention of Medical Gas Mixups at Health Care Facilities

AGENCY: Food and Drug Administration, HHS.

ACTION: Notice.

SUMMARY: The Food and Drug Administration (FDA) is announcing an opportunity for public comment on the proposed collection of certain information by the agency. Under the Paperwork Reduction Act of 1995 (the PRA), Federal agencies are required to publish notice in the **Federal Register** concerning each proposed collection of information and to allow 60 days for public comment in response to the notice. This notice solicits comments on measures taken by certain Health Care medical facilities that use medical oxygen to prevent mixups with other gases.

DATES: Submit written or electronic comments on the collection of information by December 9, 2003.

ADDRESSES: Submit electronic comments on the collection of information to: *http://www.fda.gov/dockets/ecomments.* Submit written comments on the collection of information to the Division of Dockets Management (HFA–305), Food and Drug Administration, 5630 Fishers Lane, rm. 1061, Rockville, MD 20852. All comments should be identified with the docket number found in brackets in the heading of this document.

FOR FURTHER INFORMATION CONTACT: Karen Nelson, Office of Management Programs (HFA–250), Food and Drug Administration, 5600 Fishers Lane, Rockville, MD 20857, 301–827–1482

SUPPLEMENTARY INFORMATION: Under the PRA (44 U.S.C. 3501–3520), Federal agencies must obtain approval from the Office of Management and Budget (OMB) for each collection of information they conduct or sponsor. ''Collection of information'' is defined in 44 U.S.C. 3502(3) and 5 CFR 1320.3(c) and includes agency requests or requirements that members of the public submit reports, keep records, or provide information to a third party. Section 3506(c)(2)(A) of the PRA (44 U.S.C. 3506(c)(2)(A)) requires Federal agencies to provide a 60-day notice in the **Federal Register** concerning each proposed collection of information, before submitting the collection to OMB for approval. To comply with this requirement, FDA is publishing notice of the proposed collection of information set forth in this document.

With respect to the following collection of information, FDA invites comments on these topics: (1) Whether the proposed collection of information is necessary for the proper performance of FDA's functions, including whether the information will have practical utility; (2) the accuracy of FDA's estimate of the burden of the proposed collection of information, including the validity of the methodology and assumptions used; (3) ways to enhance the quality, utility, and clarity of the information to be collected; and (4) ways to minimize the burden of the collection of information on respondents, including through the use of automated collection techniques,

when appropriate, and other forms of information technology.

Medical Oxygen Manufacturers and Fillers—21 CFR Parts 210 and 211

The Food and Drug Administration (FDA) has received four reports of medical gas mixups occurring during the past 5 years. These reports were received from hospitals and nursing homes and involved 7 deaths and 15 injuries to patients who were thought to be receiving medical grade oxygen, but who were actually receiving a different gas (e.g., nitrogen, argon) that had been mistakenly connected to the facility's oxygen supply system. In 2001, FDA published guidance making recommendations to help hospitals, nursing homes, and other health care facilities avoid the tragedies that result from medical gas mixups and alerting these facilities to the hazards. This survey is intended to assess the degree of facilities' compliance with safety measures to prevent mixups, to determine if further steps are warranted to ensure the safety of patients.

FDA estimates the burden of this collection of information as follows:

TABLE 1.—ESTIMATED ANNUAL RECORDKEEPING BURDEN[1]

21 CFR Section	No. of Respondents	Annual Frequency per Response	Total Annual Responses	Hours per Response	Total Hours
210 and 211	285	1	285	.25	71.25
Total	285	1	285	.25	71.25

[1] There are no capital costs or operating and maintenance costs associated with this collection of information.

Dated: October 6, 2003.

Jeffrey Shuren,

Assistant Commissioner for Policy.

[FR Doc. 03–25754 Filed 10–9–03; 8:45 am]

BILLING CODE 4160–01–S

DEPARTMENT OF HEALTH AND HUMAN SERVICES

National Institutes of Health

Notice of Meeting; Interagency Autism Coordinating Committee

The National Institutes of Health (NIH) hereby announces a meeting of the Interagency Autism Coordinating Committee (IACC) to be held on November 21, 2003, on the NIH campus in Bethesda, Maryland.

The Children's Health Act of 2000 (Pub. L. 106–310), Title I, section 104, mandated the establishment of an Interagency Autism Coordinating Committee (IACC) to coordinate autism research and other efforts within the Department of Health and Human Services (DHHS). In April 2001, Secretary Tommy Thompson delegated the authority to establish the IACC to the National Institutes of Health (NIH). The National Institute of Mental Health (NIMH) at the NIH has been designated the lead for this activity.

The IACC meeting will be open to the public, with attendance limited to space available. Individuals who plan to attend and need special assistance, such as sign language interpretation or other reasonable accommodations, should notify the contact person listed below in advance of the meeting.

Name of Committee: Interagency Autism Coordinating Committee.

Date: November 21, 2003.

Time: 10:30 a.m.–3:30 p.m.

Agenda: Discussion of autism activities across Federal agencies.

Place: National Institutes of Health, 9000 Rockville Pike, Building 31, Conference Room 10 (6th floor), Bethesda, Maryland 20892.

Contact Person: Ann Wagner, Ph.D., Division of Services and Intervention Research, National Institute of Mental Health, NIH, 6001 Executive Boulevard, Room 7142, MSC 9633, Bethesda, Maryland 20892, E-mail: *awagner@mail.nih.gov,* Phone: (301) 443–4283.

Any member of the public interested in presenting oral comments to the committee may notify the contact person listed on this notice at least 5 days in advance of the meeting. Interested individuals and representatives of organizations may submit a letter of intent, a brief description of the organization represented, and a short description of the oral presentation. Presentations may be limited to 5 minutes; both printed and electronic copies are requested for the record. In addition, any interested person may file written comments with the committee by forwarding his/her statement to the contact person listed on this notice. The statement should include the name, address, telephone number and, when applicable, the business or professional affiliation of the interested person.

Information about the meeting and on-line registration forms are also available on-line on the NIMH homepage at *http://www.nimh.nih.gov/autismiacc/index.cfm.*

Dated: October 3, 2003.

Raynard Kington,

Deputy Director, National Institutes of Health.

[FR Doc. 03–25778 Filed 10–9–03; 8:45 am]

BILLING CODE 4140–01–P

DEPARTMENT OF HEALTH AND HUMAN SERVICES

National Institutes of Health

National Cancer Institute; Notice of Closed Meeting

Pursuant to section 10(d) of the Federal Advisory Committee Act, as amended (5 U.S.C. appendix 2), notice is hereby given of the following meeting.

The meeting will be closed to the public in accordance with the provisions set forth in sections 552b(c)(4) and 552b(c)(6), Title 5 U.S.C., as amended. The grant applications and the discussions could disclose confidential trade secrets or commercial property such as patentable material, and personal information concerning individuals associated with the grant applications, the disclosure of which would constitute a clearly unwarranted invasion of personal privacy.

Name of Committee: National Cancer Institute Special Emphasis Panel, SPORES in Leukemia—Lymphoma.

Date: October 29–31, 2003.

Time: 8 a.m. to 6 p.m.

Agenda: To review and evaluate grant applications.

Place: Gaithersburg Marriott Washingtonian Center, 9751 Washingtonian Boulevard, Gaithersburg, MD 20878.

Contact Person: Bratin K. Saha, Ph.D., Scientific Review Administrator, Research Programs Review Branch, Division of Extramural Activities, National Cancer Institute, 6116 Executive Blvd., Bethesda, MD 20892, (301) 402–0371, *sahab@mail.nih.gov.*

This notice is being published less than 15 days prior to the meeting due to the timing limitations imposed by the review and funding cycle.

(Catalogue of Federal Domestic Assistance Program Nos. 93.392, Cancer Construction; 93.393, Cancer Cause and Prevention

Research; 93.394, Cancer Detection and Diagnosis Research; 93.395, Cancer Treatment Research; 93.396, Cancer Biology Research; 93.397, Cancer Centers Support; 93.398, Cancer Research Manpower; 93.399, Cancer Control, National Institutes of Health, HHS)

Dated: October 3, 2003

LaVerne Y. Stringfield,

Director, Office of Federal Advisory Committee Policy.

[FR Doc. 03–25663 Filed 10–9–03; 8:45 am]

BILLING CODE 4140–01–M

DEPARTMENT OF HEALTH AND HUMAN SERVICES

National Institutes of Health

National Cancer Institute; Notice of Closed Meeting

Pursuant to section 10(d) of the Federal Advisory Committee Act, as amended (5 U.S.C. appendix 2), notice is hereby given of a meeting of the Board of Scientific Counselors, National Cancer Institute.

The meeting will be closed to the public as indicated below in accordance with the provisions set forth in section 552b(c)(6), Title 5 U.S.C., as amended for the review, discussion, and evaluation of individual intramural programs and projects conducted by the National Cancer Institute, including consideration of personnel qualifications and performance, and the competence of individual investigators, the disclosure of which would constitute a clearly unwarranted invasion of personal privacy.

Name of Committee: Board of Scientific Counselors, National Cancer Institute; Subcommittee 2—Basic Sciences.

Date: November 3–4, 2003.

Time: 6 p.m. to 5 p.m.

Agenda: To review and evaluate personal qualifications and performance, and competence of individual investigators.

Place: Holiday Inn Chevy Chase, Palladian Room, 5520 Wisconsin Avenue, Chevy Chase, MD 20815.

Contact Person: Florence E. Farber, Ph.D., Health Scientific Administrator, Office of the Director, National Cancer Institute, National Institutes of Health, 6116 Executive Boulevard, Room 2115, Bethesda, MD 20892, 301–496–7628, *ff6p@nih.gov.*

Any interested person may file written comments with the committee by forwarding the statement to the Contact Person listed on this notice. The statement should include the name, address, telephone number and when applicable, the business or professional affiliation of the interested person.

In the interest of security, NIH has instituted stringent procedures for entrance into the building by non-government employees. Persons without a government I.D. will need to show a photo I.D. and sign-in at the security desk upon entering the building.

(Catalogue of Federal Domestic Assistance Program Nos. 93.392, Cancer Construction; 93.393, Cancer Cause and Prevention Research; 93.394, Cancer Detection and Diagnosis Research; 93.395, Cancer Treatment Research; 93.396, Cancer Biology Research; 93.397, Cancer Centers Support; 93.398, Cancer Research Manpower; 93.399, Cancer Control, National Institutes of Health, HHS)

Dated: October 3, 2003.

LaVerne Y. Stringfield,

Director, Office of Federal Advisory Committee Policy.

[FR Doc. 03–25666 Filed 10–9–03; 8:45 am]

BILLING CODE 4140–01–M

DEPARTMENT OF HEALTH AND HUMAN SERVICES

National Institutes of Health

National Cancer Institute; Notice of Closed Meeting

Pursuant to section 10(d) of the Federal Advisory Committee Act, as amended (5 U.S.C. appendix 2), notice is hereby given of the following meeting.

The meeting will be closed to the public in accordance with the provisions set forth in sections 552b(c)(4) and 552b(c)(6), Title 5 U.S.C., as amended. The grant applications and the discussions could disclose confidential trade secrets or commercial property such as patentable material, and personal information concerning individuals associated with the grant applications, the disclosure of which would constitute a clearly unwarranted invasion of personal privacy.

Name of Committee: National Cancer Institute Initial Review Group, Subcommittee I—Career Development.

Date: November 12–13, 2003.

Time: 8:30 a.m. to 2 p.m.

Agenda: To review and evaluate grant applications.

Place: Holiday Inn Georgetown, 2101 Wisconsin Avenue, NW., Washington, DC 20007.

Contact Person: Robert Bird, PhD., Scientific Review Administrator, Resources and Training Review Branch, National Cancer Institute, National Institutes of Health, 6116 Executive Blvd., MSC 8328, Room 8113, Bethesda, MD 20892–8328, 301–496–7978; *birdr@mail.nih.gov.*

(Catalogue of Federal Domestic Assistance Program Nos. 93.392, Cancer Construction; 93.393, Cancer Cause and Prevention Research; 93.394, Cancer Detection and Diagnosis Research; 93.395, Cancer Treatment Research; 93.396, Cancer Biology Research; 93.397, Cancer Centers Support; 93.398, Cancer Research Manpower; 93.399, Cancer Control, National Institutes of Health, HHS)

Dated: October 3, 2003.

LaVerne Y. Stringfield,

Director, Office of Federal Advisory Committee Policy.

[FR Doc. 03–25667 Filed 10–9–03; 8:45 am]

BILLING CODE 4140–01–M

DEPARTMENT OF HEALTH AND HUMAN SERVICES

National Institutes of Health

National Cancer Institute; Notice of Closed Meeting

Pursuant to section 10(d) of the Federal Advisory Committee Act, as amended (5 U.S.C. appendix 2), notice is hereby given of a meeting of the Board of Scientific Counselors, National Cancer Institute. The meeting will be closed to the public as indicated below in accordance with the provisions set forth in section 552b(c)(6), Title 5 U.S.C., as amended for the review, discussion, and evaluation of individual intramural programs and projects conducted by the National Cancer Institute, including consideration of personnel qualifications and performance, and competence of individual investigators, the disclosure of which would constitute a clearly unwarranted invasion of personal privacy.

Name of Committee: Board of Scientific Counselors, National Cancer Institute, Subcommittee 1—Clinical Sciences and Epidemiology.

Date: November 3, 2003.

Time: 8:30 a.m. to 10 p.m.

Agenda: To review and evaluate personal qualifications and performance, and competence of individual investigators.

Place: National Cancer Institute, Building 341, C Wing, 6th Floor, 9000 Rockville Pike; Conference Room 10; Bethesda, MD 20892.

Contact Person: Abby B. Sandler, Ph.D., Scientific Review Administrator, Institute Review Office, Office of the Director, National Cancer Institute, National Institutes of Health, 6116 Executive Boulevard, Room 2114, Rockville, MD 20852, (301) 496–7628.

Any interested person may file written comments with the committee by forwarding the statement to the Contact Person listed on this notice. The statement should include the name, address, telephone number and when applicable, the business or professional affiliation of the interested person.

In the interest of security, NIH has instituted stringent procedures for entrance into the building by non-government employees. Persons without a government I.D. will need to show a photo I.D. and sign-in at the security desk upon entering the building.

In the interest of security, NIH has instituted stringent procedures for entrance

into the building by non-government employees. Persons without a government I.D. will need to show a photo I.D. and sign-in at the security desk upon entering the building.

(Catalogue of Federal Domestic Assistance Program Nos. 93.392, Cancer Construction; 93.393, Cancer Cause and Prevention Research; 93.394, Cancer Detection and Diagnosis Research; 93.395, Cancer Treatment Research; 93.396, Cancer Biology Research; 93.397, Cancer Centers Support; 93.398, Cancer Research; Manpower; 93.399, Cancer Control, National Institutes of Health, HHS)

Dated: October 3, 2003.

LaVerne Y. Stringfield,

Director, Office of Federal Advisory Committee Policy.

[FR Doc. 03–25670 Filed 10–9–03; 8:45 am]

BILLING CODE 4140–01–M

DEPARTMENT OF HEALTH AND HUMAN SERVICES

National Institutes of Health

National Cancer Institute; Notice of Closed Meeting

Pursuant to section 10(d) of the Federal Advisory Committee Act, as amended (5 U.S.C. appendix 2), notice is hereby given of the following meeting.

The meeting will be closed to the public in accordance with the provisions set forth in sections 552b(c)(4) and 552b(c)(6), Title 5 U.S.C., as amended. The grant applications and the discussions could disclose confidential trade secrets or commercial property such as patentable material, and personal information concerning individuals associated with the grant applications, the disclosure of which would constitute a clearly unwarranted invasion of personal privacy.

Name of Committee: National Cancer Institute Initial Review Group, Subcommittee A—Cancer Centers.

Date: December 4–5, 2003.

Time: 7 p.m. to 5 p.m.

Agenda: To review and evaluate grant applications.

Place: Holiday Inn Chevy Chase, 5520 Wisconsin Avenue, Chevy Chase, MD 20815.

Contact Person: David E. Maslow, PhD, Scientific Review Administrator, Grants Review Branch, Division of Extramural Activities, National Cancer Institute, National Institutes of Health, 6116 Executive Boulevard—Room 8117, Bethesda, MD 20892–7405, (301) 496–2330.

Any interested person may file written comments with the committee by forwarding the statement to the Contact Person listed on this notice. The statement should include the name, address, telephone number and, when applicable, the business or professional affiliation of the interested person.

(Catalogue of Federal Domestic Assistance Program Nos. 93.392, Cancer Construction; 93.393, Cancer Cause and Prevention Research; 93.394, Cancer Detection and Diagnosis Research; 93.395, Cancer Treatment Research; 93.396, Cancer Biology Research; 93.397, Cancer Centers Support; 93.398, Cancer Research Manpower; 93.399, Cancer Control, National Institutes of Health, HHS)

Dated: October 1, 2003.

LaVerne Y. Stringfield,

Director, Office of Federal Advisory Committee Policy.

[FR Doc. 03–25686 Filed 10–9–03; 8:45 am]

BILLING CODE 4140–01–M

DEPARTMENT OF HEALTH AND HUMAN SERVICES

National Institutes of Health

National Center for Research Resources; Notice of Closed Meetings

Pursuant to section 10(d) of the Federal Advisory Committee Act, as amended (5 U.S.C. appendix 2), notice is hereby given of the following meetings.

The meetings will be closed to the public in accordance with the provisions set forth in sections 552b(c)(4) and 552b(c)(6), Title 5 U.S.C., as amended. The grant applications and the discussions could disclose confidential trade secrets or commercial property such as patentable material, and personal information concerning individuals associated with the grant applications, the disclosure of which would constitute a clearly unwarranted invasion of personal privacy.

Name of Committee: National Center for Research Resources Special Emphasis Panel, Comparative Medicine.

Date: October 15, 2003.

Time: 2 p.m. to Adjournment.

Agenda: To review and evaluate grant applications.

Place: National Institutes of Health, One Democracy Plaza, 6701 Democracy Boulevard, Room 1068, Bethesda, MD 20892, (Telephone Conference Call).

Contact Person: Eric H. Brown, PhD., Scientific Review Administrator, Office of Review, National Center for Research Resources, National Institutes of Health, 6075 Rockledge Drive, MSC 7965, One Rockledge Centre, Room 6018, Bethesda, MD 20892–7965, 301–435–0815, *browne@ncrr.nih.gov.*

This notice is being published less than 15 days prior to the meeting due to the timing limitations imposed by the review and funding cycle.

Name of Committee: National Center for Research Resources Special Emphasis Panel, Biomedical Research Technology.

Time: October 27, 2003.

Agenda: To review and evaluate grant applications.

Place: Bethesda Marriott Suites, 6711 Democracy Boulevard, Bethesda, MD 20817.

Contact Person: Mohan Viswanathan, PhD., Scientific Review Administrator, National Center for Research Resources, National Institutes of Health, Office of Review, 6705 Rockledge Drive, MSC 7965, One Rockledge Centre, Room 6018, Bethesda, MD 20892, (301) 435–0829, *viswanathanm@ncrr.nih.gov.*

(Catalogue of Federal Domestic Assistance Program Nos. 93.306, Comparative Medicine; 93.333, Clinical Research; 93.371, Biomedical Technology; 93.389, Research Infrastructure, 93.306, 93.333, National Institutes of Health, HHS)

Dated: October 3, 2003.

LaVerne Y. Stringfield,

Director, Office of Federal Advisory Committee Policy.

[FR Doc. 03–25660 Filed 10–9–03; 8:45 am]

BILLING CODE 4140–01–M

DEPARTMENT OF HEALTH AND HUMAN SERVICES

National Institutes of Health

National Heart, Lung, and Blood Institute; Notice of Closed Meeting

Pursuant to section 10(d) of the Federal Advisory Committee Act, as amended (5 U.S.C. appendix 2), notice is hereby given of the following meeting.

The meeting will be closed to the public in accordance with the provisions set forth in sections 552b(c)(4) and 552b(c)(6), Title 5 U.S.C., as amended. The grant applications and the discussions could disclose confidential trade secrets or commercial property such as patentable material, and personal information concerning individuals associated with the grant applications, the disclosure of which would constitute a clearly unwarranted invasion of personal privacy.

Name of Committee: Clinical Trials Review Committee.

Date: October 27, 2003.

Time: 8 a.m. to 6 p.m.

Agenda: To review and evaluate grant applications.

Place: Hilton Silver Spring, 8727 Colesville Road, Silver Spring, MD 20910.

Contact Person: Valerie L. Prenger, Ph.D., MPH, Scientific Review Administrator, Review Branch, Room 7194, Division of Extramural Affairs, National Heart, Lung, and Blood Institute, National Institutes of Health, 6701 Rockledge Drive, MSC 7924, Bethesda, MD 20892–7924, (301) 435–0288.

(Catalogue of Federal Domestic Assistance Program Nos. 93.233, National Center for Sleep Disorders Research; 93.837, Heart and Vascular Diseases Research; 93.838, Lung Diseases Research; 93.839, Blood Diseases and Resources Research, National Institutes of Health, HHS)

Dated: October 3, 2003.

LaVerne Y. Springfield,

Director, Office of Federal Advisory Committee Policy.

[FR Doc. 03–25669 Filed 10–9–03; 8:45 am]

BILLING CODE 4140–01–M

DEPARTMENT OF HEALTH AND HUMAN SERVICES

National Institutes of Health

National Human Genome Research Institute; Notice of Closed Meeting

Pursuant to section 10(d) of the Federal Advisory Committee Act, as amended (5 U.S.C. appendix 2), notice is hereby given of the following meeting.

The meeting will be closed to the public in accordance with the provisions set forth in sections 552b(c)(4) and 552b(c)(6), Title 5 U.S.C., as amended. The grant applications and the discussions could disclose confidential trade secrets or commercial property such as patentable material, and personal information concerning individuals associated with the grant applications, the disclosure of which would constitute a clearly unwarranted invasion of personal privacy.

Name of Committee: National Human Genome Research Institute Special Emphasis Panel, Conference Grant Review.

Date: October 21, 2003.

Time: 10 a.m. to 11 a.m.

Agenda: To review and evaluate grant applications.

Place: NIH, 31, Bethesda, MD 20814, (Telephone Conference Call).

Contact Person: Rudy O. Pozzatti, PhD., Scientific Review Administrator, Office of Scientific Review, National Human Genome Research Institute, National Institutes of Health, Bethesda, MD 20892, 301–402–0838.

This notice is being published less than 15 days prior to the meeting due to the timing limitations imposed by the review and funding cycle.

(Catalogue of Federal Domestic Assistance Program Nos. 93.172, Human Genome Research, National institutes of Health, HHS)

Dated: October 3, 2003.

LaVerne Y. Stringfield,

Director, Office of Federal Advisory Committee Policy.

[FR Doc. 03–25665 Filed 10–9–03; 8:45 am]

BILLING CODE 4140–01–M

DEPARTMENT OF HEALTH AND HUMAN SERVICES

National Institutes of Health

National Human Genome Research Institute; Notice of Closed Meeting

Pursuant to section 10(d) of the Federal Advisory Committee Act, as amended (5 U.S.C. appendix 2), notice is hereby given of the following meeting.

The meeting will be closed to the public in accordance with the provisions set forth in sections 552b(c)(4) and 552b(c)(6), Title 5 U.S.C., as amended. The grant applications and the discussions could disclose confidential trade secrets or commercial property such as patentable material, and personal information concerning individuals associated with the grant applications, the disclosure of which would constitute a clearly unwarranted invasion of personal privacy.

Name of Committee: National Human Genome Research Institute Initial Review Group, Genome Research Review Committee.

Date: November 17, 2003.

Time: 8 a.m. to 5 p.m.

Agenda: To review and evaluate grant applications.

Place: Embassy Suites Chevy Chase Pavilion, Chevy Chase, DC 20015.

Contact Person: Ken D. Nakamura, PhD, Scientific Review Administrator, Office of Scientific Review, National Human Genome Research Institute, National Institutes of Health, Bethesda, MD 20892, 301 402–0838.

(Catalogue of Federal Domestic Assistance Program Nos. 93.172, Human Genome Research, National Institutes of Health, HHS)

Dated: October 1, 2003.

LaVerne Y. Stringfield,

Director, Office of Federal Advisory Committee Policy.

[FR Doc. 03–25685 Filed 10–9–03; 8:45 am]

BILLING CODE 4140–01–M

DEPARTMENT OF HEALTH AND HUMAN SERVICES

National Institutes of Health

National Institute of Diabetes and Digestive and Kidney Diseases; Notice of Meeting

Pursuant to section 10(d) of the Federal Advisory Committee Act, as amended (5 U.S.C. appendix 2), notice is hereby given of a meeting of the Board of Scientific Counselors, NIDDK.

The meeting will be open to the public as indicated below, with attendance limited to space available. Individuals who plan to attend and need special assistance, such as sign language interpretation or other reasonable accommodations, should notify the Contact Person listed below in advance of the meeting.

The meeting will be closed to the public as indicated below in accordance with the provisions set forth in section 552b(c)(6), Title 5 U.S.C., as amended for the review, discussion, and evaluation of individual intramural programs and projects conducted by the National Institute of Diabetes and Digestive and Kidney Diseases, including consideration of personnel qualifications and performance, and the competence of individual investigators, the disclosure of which would constitute a clearly unwarranted invasion of personal privacy.

Name of Committee: Board of Scientific Counselors, NIDDK.

Date: November 5–7, 2003.

Open: November 5, 2003, 6 p.m. to 6:30 p.m.

Agenda: Introductions and Overview.

Place: National Institutes of Health, Building 5, Room 127, Bethesda, MD 20892.

Closed: November 5, 2003, 6:30 p.m. to adjournment.

Agenda: To review and evaluate personal qualifications and performance, and competence of individual investigators.

Place: National Institutes of Health, Building 5, Room 127, Bethesda, MD 20892.

Closed: November 6, 2003, 8 a.m. to adjournment.

Agenda: To review and evaluate personal qualifications and performance, and competence of individual investigators.

Place: National Institutes of Health, Building 5, Room 127, Bethesda, MD 20892.

Closed: November 7, 2003, 8 a.m. to adjournment.

Agenda: To review and evaluate personal qualifications and performance, and competence of individual investigators.

Place: National Institutes of Health, Building 5, Room 127, Bethesda, MD 20892.

Contact Person: Marvin C. Gershengorn, MD, Scientific Director, Division of Intramural Research, National Institute of Diabetes, and Digestive and Kidney Diseases, National Institutes of Health, 9000 Rockville Pike, Bldg., 10, Rm. 9N222, (301) 496–4129.

In the interest of security, NIH has instituted stringent procedures for entrance into the building by non-government employees. Persons without a government I.D. will need to show a photo I.D. and sign-in at the security desk upon entering the building.

(Catalogue of Federal Domestic Assistance Program Nos. 93.847, Diabetes, Endocrinology and Metabolic Research; 93.848, Digestive Diseases and Nutrition Research; 93.849, Kidney Diseases, Urology and Hematology Research, National Institutes of Health, HHS)

Dated: October 2, 2003.

LaVerne Y. Stringfield,

Director, Office of Federal Advisory Committee Policy.

[FR Doc. 03–25661 Filed 10–9–03; 8:45 am]

BILLING CODE 4140–01–M

DEPARTMENT OF HEALTH AND HUMAN SERVICES

National Institutes of Health

National Institute on Alcohol Abuse and Alcoholism; Notice of Closed Meetings

Pursuant to section 10(d) of the Federal Advisory Committee Act, as amended (5 U.S.C. appendix 2), notice is hereby given of the following meetings.

The meetings will be closed to the public in accordance with the provisions set forth in sections 552b(c)(4) and 552b(c)(6), Title 5 U.S.C., as amended. The grant applications and the discussions could disclose confidential trade secrets or commercial property such as patentable material, and personal information concerning individuals associated with the grant applications, the disclosure of which would constitute a clearly unwarranted invasion of personal privacy.

Name of Committee: National Institute on Alcohol Abuse and Alcoholism Special Emphasis Panel, Review of R01 Application—ZAA1 HH–02.

Date: October 29, 2003.

Time: 1 p.m. to 2 p.m.

Agenda: To review and evaluate grant applications.

Place: National Institutes of Health, Wilco Building, 6000 Executive Boulevard, Room 411, Bethesda, MD 20892 (Telephone Conference Call).

Contact Person: Jeffrey I. Toward, Ph.D., Scientific Review Administrator, National Institutes of Health, National Institute on Alcohol Abuse and Alcoholism, Extramural Project Review Branch, 6000 Executive Blvd., Suite 409, Bethesda, MD 20892–7003, (301) 435–5337.

Name of Committee: National Institute on Alcohol Abuse and Alcoholism Special Emphasis Panel, Review of U18 Application—ZAA1 HH–04.

Date: October 30, 2003.

Time: 1 p.m. to 2 p.m.

Agenda: To review and evaluate grant applications.

Place: National Institutes of Health, Wilco Building, 6000 Executive Boulevard, Room 411, Bethesda, MD 20892 (Telephone Conference Call).

Contact Person: Jeffrey I. Toward, Ph.D., Scientific Review Administrator, National Institutes of Health, National Institute on Alcohol Abuse and Alcoholism, Extramural Project Review Branch, 6000 Executive Blvd., Suite 409, Bethesda, MD 20892–7003, (301) 435–5337.

(Catalogue of Federal Domestic Assistance Program Nos. 93.271, Alcohol Research Career Development Awards for Scientists and Clinicians; 93.272, Alcohol National Research Service Awards for Research Training; 93.273, Alcohol Research Programs; 93.891, Alcohol Research Center Grants, National Institutes of Health, HHS)

Dated: October 2, 2003.

LaVerne Y. Stringfield,

Director, Office of Federal Advisory Committee Policy.

[FR Doc. 03–25662 Filed 10–9–03; 8:45 am]

BILLING CODE 4140–01–M

DEPARTMENT OF HEALTH AND HUMAN SERVICES

National Institutes of Health

National Institute of Mental Health; Notice of Closed Meeting

Pursuant to section 10(d) of the Federal Advisory Committee Act, as amended (5 U.S.C. appendix 2), notice is hereby given of the following meeting.

The meeting will be closed to the public in accordance with the provisions set forth in sections 552b(c)(4) and 552b(c)(6), Title 5 U.S.C. as amended. The grant applications and the discussion could disclose confidential trade secrets or commercial property such as patentable material, and personal information concerning individuals associated with the grant applications, the disclosure of which would constitute a clearly unwarranted invasion of personal privacy.

Name of Committee: National Institute of Mental Health Special Emphasis Panel, RADAR Applications.

Date: October 23, 2003.

Time: 12 p.m. to 2 p.m.

Agenda: To review and evaluate grant applications.

Place: National Institutes of Health, Neuroscience Center, 6001 Executive Boulevard, Rockville, MD 20852 (Telephone Conference Call).

Contact Person: Martha Ann Carey, Ph.D., RN, Scientific Review Administrator, Division of Extramural Activities, National Institute of Mental Health, NIH, Neuroscience Center, 6001 Executive Blvd., Room 6151, MSC 9608, Bethesda, MD 20892–9608, 301–443–1606, *mcarey@mail.nih.gov.*

This notice is being published less than 15 days prior to the meeting due to the timing limitations imposed by the review and funding cycle.

(Catalogue of Federal Domestic Assistance Program Nos. 93.242, Mental Health Research Grants; 93.281, Scientist Development Award, Scientist Development Award for Clinicians, and Research Scientist Award; 93.282, Mental Health National Research Service Awards for Research Training, National Institutes of Health, HHS)

Dated: October 3, 2003.

LaVerne Y. Stringfield,

Director, Office of Federal Advisory Committee Policy.

[FR Doc. 03–25664 Filed 10–9–03; 8:45 am]

BILLING CODE 4140–01–M

DEPARTMENT OF HEALTH AND HUMAN SERVICES

National Institutes of Health

National Institute of Allergy and Infectious Diseases; Notice of Closed Meeting

Pursuant to section 10(d) of the Federal Advisory Committee Act, as amended (5 U.S.C. appendix 2), notice is hereby given of the following meeting.

The meeting will be closed to the public in accordance with the provisions set forth in sections 552(c)(4) and 552b(c)(6), Title 5 U.S.C., as amended. The grant applications and the discussions could disclose confidential trade secrets or commercial property such as patentable material, and personal information concerning individuals associated with the grant applications, the disclosure of which would constitute a clearly unwarranted invasion of personal privacy.

Name of Committee: National Institute of Allergy and Infectious Diseases Special Emphasis Panel, Innovative Grants on Immune Tolerance.

Date: November 3–5, 2003.

Time: 8 a.m. to 5:30 p.m.

Agenda: To review and evaluate grant applications.

Place: Holiday Inn Chevy Chase, 5520 Wisconsin Avenue, Somerset Room, Chevy Chase, MD 20815.

Contact Person: Priti Mehrotra, Ph.D., Scientific Review Administrator, Division of Extramural Activities, NIAID/NIH, 6700B Rockledge Drive, Room 2100, Bethesda, MD 20892–7616, (301) 496–2550, *pm158b@nih.,gov.*

(Catalogue of Federal Domestic Assistance Program Nos. 93.855, Allergy, Immunology, and Transplantation Research; 93.856, Microbiology and Infectious Diseases Research, National Institutes of Health, HHS)

Dated: October 3, 2003.

LaVerne Y. Stringfield,

Director, Office of Federal Advisory Committee Policy.

[FR Doc. 03–25668 Filed 10–9–03; 8:45 am]

BILLING CODE 4140–01–M

DEPARTMENT OF HEALTH AND HUMAN SERVICES

National Institutes of Health

National Institute of Dental & Craniofacial Research; Amended Notice of Meeting

Notice is hereby given of a change in the meeting of the National Advisory Dental and Craniofacial Research Council, September 18, 2003, 8:30 a.m. to September 18, 2003, 5 p.m., National

Institutes of Health, Building 31, 31 Center Drive, Bethesda, MD 20892, which was published in the **Federal Register** on August 27, 2003, 68FR166PG51–581.

The meeting will be held on October 2, 2003. The meeting is partially closed to the public.

Dated: October 1, 2003.

LaVerne Y. Stringfield,

Director, Office of Federal Advisory Committee Policy.

[FR Doc. 03–25687 Filed 10–9–03; 8:45 am]

BILLING CODE 4140–01–M

DEPARTMENT OF HEALTH AND HUMAN SERVICES

National Institutes of Health

National Institute of Neurological Disorders and Stroke; Notice of Closed Meetings

Pursuant to section 10(d) of the Federal Advisory Committee Act, as amended (5 U.S.C. appendix 2), notice is hereby given of the following meetings.

The meetings will be closed to the public in accordance with the provisions set forth in sections 552b(c)(4) and 552b(c)(6), Title 5 U.S.C., as amended. The grant applications and the discussions could disclose confidential trade secrets or commercial property such as patentable material, and personal information concerning individuals associated with the grant applications, the disclosure of which would constitute a clearly unwarranted invasion of personal privacy.

Name of Committee: Training Grant and Career Development Review Committee.

Date: October 15–17, 2003.

Time: 8 a.m. to 6 p.m.

Agenda: To review and evaluate grant applications.

Place: Jurys Washington Hotel, 1500 New Hampshire Avenue, NW., Washington, DC 20036.

Contact Person: Raul A. Saavedra, PhD, Scientific Review Administrator, Scientific Review Branch, Division of Extramural Research, NINDS/NIH/DHHS, NSC; 6001 Executive Blvd., Ste. 3208, Bethesda, MD 20892–9529, (301) 496–9223, *saavedrr@ninds.nih.gov*.

Name of Committee: National Institute of Neurological Disorders and Stroke Initial Review Group Neurological Sciences and Disorders A.

Date: October 16–17, 2003.

Time: 8 a.m. to 5 p.m.

Agenda: To review and evaluate grant applications.

Place: Washington Terrace Hotel, 1515 Rhode Island Avenue, NW., Washington, DC 20005.

Contact Person: Richard D. Crosland, PhD, Scientific Review Administrator, Scientific Review Branch, Division of Extramural Research, NINDS/NIH/DHHS, Neuroscience Center, 6001 Executive Blvd., Suite 3208, MSC 9529, Bethesda, MD 20892–9529, (301) 496–9223.

Name of Committee: National Institute of Neurological Disorders and Stroke Initial Review Group, Neurological Sciences and Disorders B.

Date: October 16–17, 2003.

Time: 8 a.m. to 5 p.m.

Agenda: To review and evaluate grant applications.

Place: Washington Terrace Hotel, 1515 Rhode Island Avenue, NW., Washington, DC 20005.

Contact Person: W. Ernest Lyons, PhD, Scientific Review Administrator, Scientific Review Branch, NINDS/NIH/DHHS, Neuroscience Center, 6001 Executive Blvd., Suite 3208, MSC 9529, Bethesda, MD 20892–9529, (301) 496–4056.

Name of Committee: National Institute of Neurological Disorders and Stroke Initial Review Group, Neurological Sciences and Disorders C.

Date: October 16–17, 2003.

Time: 8 a.m. to 5 p.m.

Agenda: To review and evaluate grant applications.

Place: Washington Terrace Hotel, 1515 Rhode Island Avenue, NW., Washington, DC 20005.

Contact Person: Alan L. Willard, PhD, Scientific Review Administrator, Scientific Review Branch, NINDS/NIH/DHHS, Neuroscience Center, 6001 Executive Blvd, Suite 3208, MSC 9529, Bethesda, MD 20892–9529, (301) 496–5390, *aw135y@nih.gov*

Name of Committee: National Institute of Neurological Disorders and Stroke Initial Review Group, Neurological Sciences and Disorders K.

Date: October 23–24, 2003.

Time: 8:30 a.m. to 5 p.m.

Agenda: To review and evaluate grant applications.

Place: Grand Hyatt—San Francisco, 345 Stockton Street, Union Square, San Francisco, CA 94115.

Contact Person: Katherine M. Woodbury, PhD, Scientific Review Administrator, Scientific Review Branch, NINDS/NIH/DHHS, Neuroscience Center, 6001 Executive Blvd., Suite 3208, MSC 9529, Bethesda, MD 20892–9529, (301) 496–9223.

(Catalogue of Federal Domestic Assistance Program Nos. 93.853, Clinical Research Related to Neurological Disorders; 93.854, Biological Basis Research in the Neurosciences, National Institutes of Health, HHS)

Dated: October 1, 2003.

LaVerne Y. Stringfield,

Director, Office of Federal Advisory Committee Policy.

[FR Doc. 03–25691 Filed 10–9–03; 8:45 am]

BILLING CODE 4140–01–M

DEPARTMENT OF HEALTH AND HUMAN SERVICES

National Institutes of Health

National Institute of Neurological Disorders and Stroke; Notice of Closed Meeting

Pursuant to section 10(d) of the Federal Advisory Committee Act, as amended (5 U.S.C. appendix 2), notice is hereby given of the following meeting.

The meeting will be closed to the public in accordance with the provisions set forth in sections 552b(c)(4) and 552b(c)(6), Title 5 U.S.C., as amended. The grant applications and the discussions could disclose confidential trade secrets or commercial property such as patentable material, and personal information concerning individuals associated with the grant applications, the disclosure of which would constitute a clearly unwarranted invasion of personal privacy.

Name of Committee: National Institute of Neurological Disorders and Stroke Special Emphasis Panel.

Date: October 29, 2003.

Time: 11 a.m. to 2 p.m.

Agenda: To review and evaluate grant applications.

Place: Hilton Chicago O'Hare Airport, 17 East Monroe Street, Chicago, IL 60603.

Contact Person: Joann McConnell, PhD, Scientific Review Administrator, Scientific Review Branch, NIH/NINDS/Neuroscience Center, 6001 Executive Blvd., Suite 3208, Msc 9529, Bethesda, MD 20892–9529, (301) 496–5324, *mcconniej@ninds.nih.gov*.

(Catalogue of Federal Domestic Assistance Program Nos. 93.853, Clinical Research Related to Neurological Disorders; 93.854, Biological Basis Research in the Neurosciences, National Institutes of Health, HHS)

Dated: October 1, 2003.

LaVerne Y. Stringfield,

Director, Office of Federal Advisory Committee Policy.

[FR Doc. 03–25692 Filed 10–9–03; 8:45 am]

BILLING CODE 4140–01–M

DEPARTMENT OF HEALTH AND HUMAN SERVICES

National Institutes of Health

Office of the Director, National Institutes of Health; Notice of Meeting

Pursuant to section 10(a) of the Federal Advisory Committee Act, as amended (5 U.S.C. Appendix 2), notice is hereby given of a meeting of the Recombinant DNA Advisory Committee.

The meeting will be open to the public, with attendance limited to space

available. Individuals who plan to attend and need special assistance, such as sign language interpretation or other reasonable accommodations, should notify the Contact Person listed below in advance of the meeting.

Name of Committee: Recombinant DNA Advisory Committee.

Date: October 17, 2003.

Time: 8:30 a.m. to 12 p.m.

Agenda: Review of OBA protocol # 0307–593: A phase I open-label safety study of intrastriatal infusion of adeno-associated virus encoding human aromatic L-amino acid decarboxylase (AAV–hAADC–2) in subjects with advanced Parkinson's Disease.

Place: Bethesda Marriott, 5151 Pooks Hill Road, Bethesda, MD 20814, (Telephone Conference Call).

Contact Person: Stephen M. Rose, PhD, Executive Secretary, Office of Biotechnology Activities, National Institutes of Health, 6705 Rockledge Drive, Room 750, Bethesda, MD 20892, (301) 496–9838, *sr8j@nih.gov*.

This meeting is being advertised less than 15 days prior to the meeting date. This meeting was rescheduled due to adverse weather conditions in the Washington metropolitan area.

Information is also available on the Institute's/Center's Home page: *http://www4.od.nih.gov/obal*, where an agenda and any additional information for the meeting will be posted when available.

OMB's ''Mandatory Information Requirements for Federal Assistance Program Announcements'' (45 FR 39592, June 11, 1980) requires a statement concerning the official government programs contained in the Catalog of Federal Domestic Assistance. Normally NIH lists in its announcements the number and title of affected individual programs for the guidance of the public. Because the guidance in this notice covers virtually every NIH and Federal research program in which DNA recombinant molecule techniques could be used, it has been determined not to be cost effective or in public interest to attempt to list these programs. Such a list would likely require several additional pages. In addition, NIH could not be certain that every Federal program would be included as many Federal agencies, as well as private organizations, both national and international, have elected to follow the NIH Guidelines. In lieu of the individual program listing, NIH invites readers to direct questions to the information address above about whether individual programs listed in the Catalog of Federal Domestic Assistance are affected.

(Catalogue of Federal Domestic Assistance Program Nos. 93.14, Intramural Research Training Award; 93.22, Clinical Research Loan Repayment Program for Individuals from Disadvantaged Backgrounds; 93.232, Loan Repayment Program for Research Generally; 93.39, Academic Research Enhancement Award; 93.936, NIH Acquired Immunodeficiency Syndrome Research Loan Repayment Program; 93.187, Undergraduate Scholarship Program for Individuals from Disadvantaged Backgrounds, National Institutes of Health, HHS)

Dated: October 1, 2003.

LaVerne Y. Stringfield,

Director, Office of Federal Advisory Committee Policy.

[FR Doc. 03–25688 Filed 10–9–03; 8:45 am]

BILLING CODE 4140–01–M

DEPARTMENT OF HEALTH AND HUMAN SERVICES

National Institutes of Health

Center for Scientific Review; Cancellation of Meeting

Notice is hereby given of the cancellation of the Center for Scientific Review Special Emphasis Panel, October 14, 2003, 3 p.m. to October 14, 2003, 5 p.m., National Institutes of Health, 6701 Rockledge Drive, Bethesda, MD 20892 which was published in the **Federal Register** on September 17, 2003, 68 FR 54479–54481.

The meeting is cancelled due to administrative changes.

Dated: October 1, 2003.

LaVerne Y. Stringfield,

Director, Office of Federal Advisory Committee Policy.

[FR Doc. 03–25689 Filed 10–9–03; 8:45 am]

BILLING CODE 4140–01–M

DEPARTMENT OF HEALTH AND HUMAN SERVICES

National Institutes of Health

Center for Scientific Review; Notice of Closed Meetings

Pursuant to section 10(d) of the Federal Advisory Committee Act, as amended (5 U.S.C. appendix 2), notice is hereby given of the following meetings.

The meetings will be closed to the public in accordance with the provisions set forth in sections 552b(c)(4) and 552b(c)(6), Title 5 U.S.C., as amended. The grant applications and the discussions could disclose confidential trade secrets or commercial property such as patentable material, and personal information concerning individuals associated with the grant applications, the disclosure of which would constitute a clearly unwarranted invasion of personal privacy.

Name of Committee: Center for Scientific Review Special Emphasis Panel, Hyperaccelerated Award/Mechanisms in Immunomodulation Trials.

Date: October 7, 2003.

Time: 1 p.m. to 2 p.m.

Agenda: To review and evaluate grant applications.

Place: National Institutes of Health, 6701 Rockledge Drive, Bethesda, MD 20892 (Telephone Conference Call).

Contact Person: Samuel C. Edwards, PhD, Scientific Review Administrator, Center for Scientific Review, National Institutes of Health, 6701 Rockledge Drive, Room 4200, MSC 7812, Bethesda, MD 20892, (301) 435–1152, *edwardss@csr.nih.gov.*

This notice is being published less than 15 days prior to the meeting to the timing limitations imposed by the review and funding cycle.

Name of Committee: Center for Scientific Review Special Emphasis Panel, Malaria Transmission.

Date: October 14, 2003.

Time: 3 p.m. to 5 p.m.

Agenda: To review and evaluate grant applications.

Place: National Institutes of Health, 6701 Rockledge Drive, Bethesda, MD 20892 (Telephone Conference Call).

Contact Person: Marian Wachtel, PhD, Scientific Review Administrator, Center for Scientific Review, National Institutes of Health, 6701 Rockledge Drive, Room 3208, MSC 7858, Bethesda, MD 20892, (301) 435–1148, *wachtelm@csr.nih.gov.*

This notice is being published less than 15 days prior to the meeting due to the timing limitations imposed by the review and funding cycle.

Name of Committee: Center for Scientific Review Special Emphasis Panel, ZRG1 SSS7 02M: Small Business: Medical Imaging Technologies: Member Conflicts.

Date: October 15, 2003.

Time: 7 p.m. to 10 p.m.

Agenda: To review and evaluate grant applications.

Place: Georgetown Suites, 1111 30th Street, NW., Washington, DC 20007.

Contact Person: Robert J. Nordstrom, PhD, Scientific Review Administrator, Center for Scientific Review, National Institutes of Health, 6701 Rockledge Drive, Room 5118, MSC 7854, Bethesda, MD 20892, (301) 435–1175.

This notice is being published less than 15 days prior to the meeting due to the timing limitations imposed by the review and funding cycle.

Name of Committee: Biobehavioral and Behavioral Processes Initial Review Group, Motor Function, Speech and Rehabilitation Study Section.

Date: October 17, 2003.

Time: 8:30 a.m. to 6 p.m.

Agenda: To review and evaluate grant applications.

Place: St. Gregory Hotel, 2033 M Street, NW., Washington, DC 20036.

Contact Person: Weijia Ni, PhD, Scientific Review Administrator, Center for Scientific Review, National Institutes of Health, 6701 Rockledge Drive, Room 3190, MSC 7848, (for overnight mail use room # and 20817 zip), Bethesda, MD 20892, (301) 435–1507, *niw@csr.nih.gov.*

This notice is being published less than 15 days prior to the meeting due to the timing limitations imposed by the review and funding cycle.

Name of Committee: Center for Scientific Review Special Emphasis Panel, Member Conflict.
Date: October 23, 2003.
Time: 2 p.m. to 3:30 p.m.
Agenda: To review and evaluate grant applications.
Place: National Institutes of Health, 6701 Rockledge Drive, Bethesda, MD 20892 (Telephone Conference Call).
Contact Person: Syed Amir, PhD, Scientific Review Administrator, Center for Scientific Review, National Institutes of Health, 6701 Rockledge Drive, Room 6168, MSC 7892, Bethesda, MD 20892, (301) 435–1043, *amirs@csr.nih.gov.*

Name of Committee: Center for Scientific Review Special Emphasis Panel, Member Conflict.
Date: October 24, 2003.
Time: 2 p.m. to 3:30 p.m.
Agenda: To review and evaluate grant applications.
Place: National Institutes of Health, 6701 Rockledge Drive, Bethesda, MD 20892 (Telephone Conference Call).
Contact Person: Syed Amir, PhD, Scientific Review Administrator, Center for Scientific Review, National Institutes of Health, 6701 Rockledge Drive, Room 6168, MSC 7892, Bethesda, MD 20892, (301) 435–1043, *amirs2csr.nih.gov.*

Name of Committee: Center for Scientific Review Special Emphasis Panel, ZRG1 SSS7 11B: Small Business: Medical Imaging Technologies: Optics II.
Date: October 27, 2003.
Time: 8 a.m. to 5 p.m.
Agenda: To review and evaluate grant applications.
Place: Holiday Inn Select Bethesda, 8120 Wisconsin Ave., Bethesda, MD 20814.
Contact Person: Robert J. Nordstorm, PhD, Scientific Review Administrator, Center for Scientific Review, National Institutes of Health, 6701 Rockledge Drive, Room 5118, MSC 7854, Bethesda, MD 20892, (301) 435–1175, *nordstrr@csr.nih.gov.*

Name of Committee: Biobehavioral and Behavioral Processes Initial Review Group, Language and Communication Study Section.
Date: October 27–28, 2003.
Time: 8:30 a.m. to 5 p.m.
Agenda: To review and evaluate grant applications.
Place: Georgetown Suites, 1000 29th Street, NW., Washington, DC 2007.
Contact Person: Weijia Ni, PhD, Scientific Review Administrator, Center for Scientific Review, National Institutes of Health, 6701 Rockledge Drive, Room 3190, MSC 7848, (for overnight mail use room # and 20817 zip), Bethesda, MD 20892, (301) 435–1507, *niw@csr.nih.gov.*

Name of Committee: Center for Scientific Review Special Emphasis Panel, ZRG1 SSS7 10B: Small Business: Medical Imaging Technologies: Optics I.
Date: October 28, 2003.
Time: 8 a.m. to 5 p.m.
Agenda: To review and evaluate grant applications.
Place: Holiday Inn Select Bethesda, 8120 Wisconsin Ave., Bethesda, MD 20814.
Contact Person: Robert J. Nordstorm, PhD, Scientific Review Administrator, Center for Scientific Review, National Institutes of Health, 6701 Rockledge Drive, Room 5118, MSC 7854, Bethesda, MD 20892, (301) 435–1175, *nordstrr@csr.nih.gov.*

Name of Committee: Center for Scientific Review Special Emphasis Panel, ZRG1 SSS–7 (50): Medical Imaging Technology.
Date: October 29, 2003.
Time: 10 a.m. to 12 p.m.
Agenda: To review and evaluate grant applications.
Place: Holiday Inn Select Bethesda, 8120 Wisconsin Ave., Bethesda, MD 20814.
Contact Person: Robert J. Nordstorm, PhD, Scientific Review Administrator, Center for Scientific Review, National Institutes of Health, 6701 Rockledge Drive, Room 5118, MSC 7854, Bethesda, MD 20892, (301) 435–1175, *nordstrr@csr.nih.gov.*

Name of Committee: Center for Scientific Review Special Emphasis Panel, ZRG1 SSS7 13B: Small Business: Medical Imaging Technologies.
Date: October 29, 2003.
Time: 1 p.m. to 5 p.m.
Agenda: To review and evaluate grant applications.
Place: Holiday Inn Select Bethesda, 8120 Wisconsin Ave., Bethesda, MD 20814.
Contact Person: Robert J. Nordstorm, PhD, Scientific Review Administrator, Center for Scientific Review, National Institutes of Health, 6701 Rockledge Drive, Room 5118, MSC 7854, Bethesda, MD 20892, (301) 435–1175, *nordstrr@csr.nih.gov.*

Name of Committee: Center for Scientific Review Special Emphasis Panel, K Mechanism Review.
Date: October 30, 2003.
Time: 9 a.m. to 2 p.m.
Agenda: To review and evaluate grant applications.
Place: Melrose Hotel, 2430 Pennsylvania Ave., NW., Washington, DC 20037.
Contact Person: Camilla E. Day, PhD, Scientific Review Administrator, Center for Scientific Review, National Institutes of Health, 6701 Rockledge Drive, Room 2212, MSC 7890, Bethesda, MD 20892, (301) 435–1037, *dayc@csr.nih.gov.*

(Catalogue of Federal Domestic Assistance Program Nos. 93.306, Comparative Medicine; 93.333, Clinical Research, 93.306, 93.333, 93.337, 93.393–93.396, 93.837–93.844, 93.846–93.878, 93.892, 93.893, National Institutes of Health, HHS).

Dated: October 1, 2003.

LaVerne Y. Stringfield,

Director, Office of Federal Advisory Committee Policy.

[FR Doc. 03–25690 Filed 10–9–03; 8:45 am]

BILLING CODE 4140–01–M

DEPARTMENT OF HEALTH AND HUMAN SERVICES

National Institutes of Health

Notice of Listing of Members of the National Institutes of Health's Senior Executive Service Performance Review Board (PRB)

The National Institutes of Health (NIH) announces the persons who will serve on the National Institutes of Health's Senior Executive Service Performance Review Board. This action is being taken in accordance with Title 5, U.S.C., Section 4314(c)(4), which requires that members of performance review boards be appointed in a manner to ensure consistency, stability, and objectivity in performance appraisals, and requires that notice of the appointment of an individual to serve as a member be published in the **Federal Register**.

The following persons will serve on the NIH Performance Review Board, which oversees the evaluation of performance appraisals of NIH Senior Executive Service (SES) members:

Mr. Charles Leasure, Jr. (Chair)
Dr. Robert Balaban
Dr. Milton Corn
Dr. Thomas Gallagher
Dr. Michael Gottesman
Dr. Sharon Hrynkow
Dr. Raynard Kington
Dr. Richard Nakamura
Dr. Audrey Penn
Dr. Belinda Seto
Mr. Marc Smolonsky
Mr. Kennety Stith
Mr. Frederick Walker

For further information about the NIH Performance Review Board, contact the Office of Human Resources, Division of Workforce Management, Senior and Scientific Employment Branch, National Institutes of Health, Building 31/B3C08, Bethesda, Maryland 20892, telephone (301) 402–8145 (not a toll-free number).

Dated: October 3, 2003.

Raynard S. Kington,

Deputy Director, NIH.

[FR Doc. 03–25777 Filed 10–9–03; 8:45 am]

BILLING CODE 4140–09–M

DEPARTMENT OF HEALTH AND HUMAN SERVICES

National Institutes of Health

Submission for OMB Review; Comment Request; the Atherosclerosis Risk in Communities Study (ARIC)

SUMMARY: Under the provisions of section 3506(c)(2)(A) of the Paperwork

Reduction Act of 1995, the National Heart, Lung, and Blood Institute (NHLBI), the National Institutes of Health (NIH) has submitted to the Office of Management and Budget (OMB) a request for review and approval the information collection listed below. This proposed information collection was previously published in the **Federal Register** on August 22, 2000, pages 50999–51000, and allowed 60-days for public comment. No public comments were received. The purpose of this notice is to allow an additional 30 days for public comment. The National Institutes of Health may not conduct or sponsor, and the respondent is not required to respond to, an information collection that has been extended, revised, or implemented on or after October 1, 1995, unless it displays a currently valid OMB control number.

PROPOSED COLLECTION: *Title:* The Atherosclerosis Risk in Communities Study (ARIC). *Type of Information Collection Request:* Revision of a currently approved collection (OMB No. 0925–0281). *Need and Use of Information Collection:* This project involves annual follow-up by telephone of participants in the ARIC study, review of their medical records, and interviews with doctors and family to identify disease occurrence. Interviewers will contact doctors and hospitals to ascertain participants' cardiovascular events. Information gathered will be used to further describe the risk factors, occurrence rates, and consequences of cardiovascular disease in middle aged and older men and women. *Frequency of Response:* The participants will be contacted annually. *Affected Pubic:* Individuals or households; Business or other for profit; Small businesses or organizations. *Type of Respondents:* Middle aged and elderly adults; doctors and staff of hospitals and nursing homes. The annual reporting burden is as follows: Estimated Number of Respondents: 15,113; *Estimated Number of Responses per Respondent:* 1.0; *Average Burden Hours Per Response:* 0.2479; and *Estimated Total Annual Burden Hours Requested:* 3,746. The annualized cost to respondents is estimated at $41,453, assuming respondents' time at the rate of $10 per hour for family and patient respondents, and $75 per hour for physicians. There are no Capital Costs to report. There are no Operating or Maintenance Costs to report.

ESTIMATE OF ANNUAL HOUR BURDEN

Type of response	Number of respondents	Frequency of response	Average time per response	Annual hour burden
Participant Follow-up	14,488	1.0	0.2500	3,622
Physician, hospital, nursing home staff [1]	245	1.0	0.2500	61
Participant's next-of-kin [1]	380	1.0	0.1667	63
Total	15,113	1.0	0.2479	3,746

[1] Annual burden is placed on doctors, hospitals, nursing homes, and respondent relatives/informants through requests for information which will help in the compilation of the number and nature of new fatal and nonfatal events.

Request for Comments: Written comments and/or suggestions from the public and affected agencies should address one or more of the following points: (1) Evaluate whether the proposed collection of information is necessary for the proper performance of the function of the agency, including whether the information will have practical utility; (2) Evaluate the accuracy of the agency's estimate of the burden of the proposed collection of information, including the validity of the methodology and assumptions used; (3) Enhance the quality, utility, and clarity of the information to be collected; (4) Minimize the burden of the collection of information on those who are to respond, including the use of appropriate automated, electronic, mechanical, or other technological collection techniques or other forms of information technology.

Direct Comments to OMB: Written comments and/or suggestions regarding the item(s) contained in this notice, especially regarding the estimated public burden and associated response time, should be directed to the: Office of Management and Budget, Office of Regulatory Affairs, New Executive Office Building, Room 10235, Washington, DC 20503, Attention: Desk Officer for NIH. To request more information on the proposed project or to obtain a copy of the data collection plans and instruments, contact: Dr. Merle Myerson, NIH, NHLBI, 6701 Rockledge Drive, MSC 7934, Bethesda, MD 20892–7934, or call non-toll-free number (301) 435–0707 or E-mail your request, including your address to: *MyersonM@nhlbi.nih.gov.*

Comments Due Date: Comments regarding this information collection are best assured of having their full effect if received within 30-days of the date of this publication.

Dated: September 28, 2003.

Peter Savage,

Director, DECA, National Heart, Lung and Blood Institute, National Institutes of Health.

[FR Doc. 03–25693 Filed 10–9–03; 8:45 am]

BILLING CODE 4140–01–M

DEPARTMENT OF HEALTH AND HUMAN SERVICES

Public Health Service

National Toxicology Program

The National Toxicology Program (NTP) Center for the Evaluation of Risks to Human Reproduction (CERHR) Announces the Availability of the NTP–CERHR Monograph on Methanol and Plans for Announcing Availability of Future Monographs.

Summary

The NTP–CERHR Monograph on the Potential Human Reproductive and Developmental Effects of Methanol is now available electronically on the CERHR web site or on CD or in printed text from the CERHR (contact information below). All future notifications about the availability of NTP–CERHR monographs will be provided through announcements from the NTP list-server (an electronic notification service) and on the CERHR web site: *http://cerhr.niehs.nih.gov.*

NTP–CERHR Monograph on Methanol

The CERHR announces the availability of the NTP–CERHR

Monograph on the Potential Human Reproductive and Developmental Effects of Methanol. This monograph is the next in the NTP–CERHR series and is posted electronically on the CERHR website: *http://cerhr/niehs/nih/gov.* It is also available on CD or in printed text (limited copies) from the CERHR by contacting Dr. Michael Shelby, Director CERHR [NIEHS, 79 T.W. Alexander Drive, Building 4401, Room 103, P.O. Box 12233, MD EC–32, Research Triangle Park, NC 27709, telephone: (919) 541–3455; facsimile: (919) 316–4511; *shelby@niehs.nih.gov.*]

The CERHR follows a formal process for the evaluation of selected chemicals that includes opportunities for public input. The NTP–CERHR monographs are the final products of those evaluations. NTP–CERHR monographs include three parts: (1) The NTP brief, which presents the NTP's interpretation of the available data and its conclusions on the potential for a chemical to cause adverse developmental and reproductive effects in humans, (2) the expert panel report, and (3) all public comments on the expert panel report. The NTP utilizes information provided in the expert panel report, the public comments, as well as information from studies published since the expert panel meeting in reaching its conclusions about any potential hazard for humans.

Plans for Announcing Availability of Future Monographs

All future notifications about the availability of NTP–CERHR monographs will be provided through announcements from the NTP list-server (an electronic mail service) and on the CERHR web site: *http://cerhr.niehs.nih.gov.* Anyone can subscribe to the NTP list-server to receive notification about these documents and other NTP activities in several ways: (1) By registering on-line through the NTP web site at *http://ntp-server.niehs.nih.gov,* select Announcements, (2) by sending an e-mail to *ntpmail-request@list.niehs.nih.gov* with the word *subscribe* as the body of the message, or (3) by contacting the NTP Liaison and Scientific Review Office (919–541–0530 or *liaison@starbase.niehs.nih.gov*). Individuals or groups who have already subscribed to the NTP list-server do not need to subscribe again.

Monographs are now completed for six phthalates [di-butyl phthalate (DBP), butyl benzyl phthalate (BBP), di-isodecyl phthalate (DIDP), di-isononyl phthalate (DINP), di-n-hexyl phthalate (DnHP), and di-n-octyl phthalate (DnOP)] and methanol. The monographs for di-(2-ethylhexyl) phthalate (DEHP), 1-bromopropane, 2-bromopropane, ethylene glycol, and propylene glycol are in production and the NTP will make them available as soon as they are completed.

Background Information About CERHR

The NTP established the NTP CERHR in June 1998 [**Federal Register**, December 14, 1998: Volume 63, Number 239, page 68782)]. The CERHR is a publicly accessible resource for information about adverse reproductive and/or developmental health effects associated with exposure to environmental and/or occupational agents. The CERHR carries out assessments of these agents following a formal, multi-step, open process that includes rigorous evaluations by independent scientific panels in public forums and opportunities for public input. This process was published in the **Federal Register** (July 16, 2001: Volume 66, Number 136, pages 37047–37048) and is available on the CERHR web site see About CERHR or in printed text from the CERHR.

The CERHR invites the nomination of agents for review or scientists for its expert registry. Information about CERHR and the nomination process can be obtained from its homepage (*http://cerhr.niehs.nih.gov*) or by contacting Dr. Shelby (contact information provided above). The CERHR selects chemicals for evaluation based upon several factors, including production volume, extent of human exposure, public concern, and published evidence of reproductive or developmental toxicity.

Dated: October 2, 2003.

Samuel H. Wilson,

Deputy Director, National Institute Environmental Health Sciences

[FR Doc. 03–25779 Filed 10–9–03; 8:45 am]

BILLING CODE 4140–01–P

DEPARTMENT OF HOUSING AND URBAN DEVELOPMENT

[Docket No. FR–4815–N–81]

Notice of Submission of Proposed Information Collection to OMB; Emergency Comment Request; Needs Assessment Survey for Farmworkers of Manatee County, FL

AGENCY: Office of the Chief Information Officer, HUD.

ACTION: Notice of proposed information collection.

SUMMARY: The proposed information collection requirement described below has been submitted to the Office of Management and Budget (OMB) for emergency review and approval, as required by the Paperwork Reduction Act. The Department is soliciting public comments on the subject proposal.

The Department is proposing a survey of the housing needs of the farmworkers and their families who reside in Manatee County, Florida.

DATES: Comments Due Date: October 17, 2003.

ADDRESSES: Interested persons are invited to submit comments regarding this proposal.

Comments must be received within seven (7) days from the date of this Notice. Comments should refer to the proposal by name and should be sent to: Lauren Wittenberg, HUD Desk Officer, Office of Management and Budget, New Executive Office Building, Washington, DC 20503; e-mail: *Lauren_Wittenberg@omb.eop.gov;* fax: 202–395–6974.

FOR FURTHER INFORMATION CONTACT: Wayne Eddins, Reports Management Officer, AYO, Department of Housing and Urban Development, 451 Seventh Street, SW., Washington, DC 20410; e-mail *Wayne_Eddins@HUD.gov;* telephone (202) 708–2374. This is not a toll-free number. Copies of available documents submitted to OMB may be obtained from Mr. Eddins.

SUPPLEMENTARY INFORMATION: This Notice informs the public that the U.S. Department of Housing and Urban Development (HUD) has submitted to OMB, for emergency processing, a proposed revision to the currently approved information collection for selecting applicants for the Fair Housing Initiatives (FHIP) Program grants.

This Notice is soliciting comments from members of the public and affecting agencies concerning the proposed collection of information to: (1) Evaluate whether the proposed collection of information is necessary for the proper performance of the functions of the agency, including whether the information will have practical utility; (2) Evaluate the accuracy of the agency's estimate of the burden of the proposed collection of information; (3) Enhance the quality, utility, and clarity of the information to be collected; and (4) Minimize the burden of the collection of information on those who are to respond; including through the use of appropriate automated collection techniques or other forms of information technology, *e.g.*, permitting electronic submission of responses.

This Notice also lists the following information:

Title of Proposal: Needs Assessment Survey for Farmworkers of Manatee County, Florida.

Description of Information Collection: The goal of this proposed data collection is to provide a detailed baseline of existing conditions among the farmworkers and their families who reside in Manatee County, Florida. This information is needed by Manatee County planning agencies to create a regional community development plan that effectively addresses farmworker housing and social service needs. The needs assessment will allow county officials and housing providers to:

(1) Engage in mid-to long-term planning for affordable housing and community service programs for low-income working persons and families;

(2) Conduct a housing stock assessment;

(3) Identify the major needs of the farmworker population; and improve program planning and management of available resources to increase access by farmworkers.

OMB Control Number: 2535—to be assigned.

Agency Form Numbers: None.

Members of Affected Public: Individuals and Households.

Estimation of the total numbers of hours needed to prepare the information collection including number of respondents, frequency of responses, and hours of response: An estimation of the total number of respondents is 400; each response is estimated to require 0.5 hours; and the total public burden is estimated to be 200 hours.

Authority: The Paperwork Reduction Act of 1995, 44 U.S.C. chapter 35, as amended.

Dated: October 3, 2003.

Wayne Eddins,

Departmental Reports Management Officer, Office of the Chief Information Officer.

[FR Doc. 03–25679 Filed 10–9–03; 8:45 am]

BILLING CODE 4210–72–P

DEPARTMENT OF HOUSING AND URBAN DEVELOPMENT

[Docket No. FR–4809–N–41]

Federal Property Suitable as Facilities To Assist the Homeless

AGENCY: Office of the Assistant Secretary for Community Planning and Development, HUD.

ACTION: Notice.

SUMMARY: This Notice identifies unutilized, underutilized, excess, and surplus Federal property reviewed by HUD for suitability for possible use to assist the homeless.

EFFECTIVE DATE: October 10, 2003.

FOR FURTHER INFORMATION CONTACT: Mark Johnston, Department of Housing and Urban Development, Room 7262, 451 Seventh Street SW., Washington, DC 20410; telephone (202) 708–1234; TTY number for the hearing- and speech-impaired (202) 708–2565, (these telephone numbers are not toll-free), or call the toll-free Title V information line at 1–800–927–7588.

SUPPLEMENTARY INFORMATION: In accordance with the December 12, 1988 court order in *National Coalition for the Homeless* v. *Veterans Administration,* No. 88–2503–OG (D.D.C.), HUD publishes a Notice, on a weekly basis, identifying unutilized, underutilized, excess and surplus Federal buildings and real property that HUD has reviewed for suitability for use to assist the homeless. Today's Notice is for the purpose of announcing that no additional properties have been determined suitable or unsuitable this week.

Dated: October 2, 2003.

John D. Garrity,

Director, Office of Special Needs Assistance Programs.

[FR Doc. 03–25389 Filed 10–9–03; 8:45 am]

BILLING CODE 4210–29–M

DEPARTMENT OF THE INTERIOR

Bureau of Land Management

[CA–330–03–1610–00]

Notice of Availability of the Headwaters Forest Reserve Proposed Resource Management Plan and Final Environmental Impact Statement/ Environmental Impact Report

AGENCY: Bureau of Land Management, Interior.

ACTION: Notice of Availability of the Headwaters Forest Reserve Proposed Resource Management Plan (RMP) and Final Environmental Impact Statement (FEIS)/Environmental Impact Report (EIR).

SUMMARY: The Bureau of Land Management (BLM) and California Department of Fish and Game have jointly prepared a Proposed RMP and associated FEIS and EIR for the Headwaters Forest Reserve (Reserve) located in Humboldt County, California. The Proposed RMP and FEIS/FEIR have been prepared pursuant to the National Environmental Policy Act (NEPA) and California Environmental Quality Act (CEQA), the Federal Land Policy and Management Act (FLPMA), the act establishing the Reserve (H.R. 2107), and BLM policies. The Proposed RMP was developed with broad public participation beginning with scoping meetings in June 2000, release of a draft RMP with public meetings in June 2002, and ongoing dialogue with a variety of publics. Both land use planning and implementation-level planning for the Reserve are included in the Proposed RMP which addresses management on the approximately 7,500 acre Reserve.

DATES: BLM Planning Regulations (43 CFR 1610.5–2) state that any person who participated in the planning process, and has an interest that may be adversely affected, may protest. The protest must be filed within 30 days of the date that the Environmental Protection Agency publishes this notice in the **Federal Register**. More specific instructions and requirements for protests are contained in the **SUPPLEMENTARY INFORMATION** section of this notice.

ADDRESSES: Copies of the Proposed RMP may be obtained from the following Bureau of Land Management locations: BLM Arcata Field Office, 1695 Heindon Road, Arcata, CA 95521, telephone (707) 825–2300; BLM California State Office, 2800 Cottage Way, Room W–1834, Sacramento, CA 95825, telephone (916) 978–4600; or requested by e-mail at *caweb330@ca.blm.gov.* BLM will also announce the availability of the Proposed RMP through local media outlets, the current project mailing list, and on the BLM Arcata Field Office Web site (*http://www.ca.blm.gov/arcata/index.html*).

FOR FURTHER INFORMATION CONTACT: Headwaters Forest Reserve Management Plan Information Line, (916) 737–3010, ext. 4326; Karen Kovacs, California Department of Fish and Game, (707) 441–5789; Lynda Roush, Bureau of Land Management, (707) 825–2300.

SUPPLEMENTARY INFORMATION: The Headwaters Forest Reserve was acquired by the Secretary of Interior and State of California on March 1, 1999 as a culmination of a comprehensive agreement of 1996, the Headwaters Agreement, between the Department of Interior, State of California, and the Pacific Lumber Company (PALCO), for the transfer of approximately 7,500 acres of old-growth and young-growth timber stands and associated buffers in a reserve, and among other considerations, the completion and approval of a Sustained Yield Plan (SYP) and Habitat Conservation Plan (HCP) for PALCO property. Cash transfer for the purchase of the Headwaters Forest Reserve was authorized in the 1997 Interior Appropriations bill (H.R. 2107) on the

Federal side and in Assembly Bill 1986 (AB 1986), Headwaters Forest, Owl Creek, and Grizzly Creek, on the state side. The Federal legislation authorizing acquisition, (1) established a specific boundary and point of access, (2) called for joint federal-state acquisition, with management by the federal government and an easement to guarantee conservation management granted to the state, and (3) established the requirement for the development of a management plan.

The 7,500-acre tract acquired includes 3,100 acres of unharvested conifer forests dominated by redwood groves and surrounded by 4,400 acres of previously harvested forest. It is located in the northwestern coast ranges of California near Humboldt Bay in Humboldt County, part of California's north coast region. The Reserve includes the headwaters of three streams draining into Humboldt Bay; South Fork Elk River, Little South Fork Elk River, and Salmon Creek. The Reserve contains three federally listed threatened fish species: southern Oregon/northern California coasts Coho salmon, northern California steelhead, and California coastal Chinook salmon, and two federally listed threatened animals: marbled murrelet and northern spotted owl. The Reserve is designated critical habitat for the Coho, Chinook, and the Murrelet. The Reserve is identified in the PALCO HCP as a site for monitoring undisturbed baseline conditions for water quality and wildlife habitat.

BLM has considered an array of alternatives including specific land use allocations and prescriptions consistent with the legislative intent for the Reserve. Species management, forest and watershed restoration, recreation, critical resource values, and research are addressed.

The planning process includes an opportunity for administrative review through a plan protest to the BLM Director should a previous commenter on the plan believe that the decision has been issued in error. Only those persons or organizations who participated in the planning process may protest. Protests from parties having no previous involvement will be denied without further review. A protesting party may raise only those issues which were submitted for the record during the planning process. New issues raised in the protest period should be directed to the BLM, Arcata Field Manager, 1695 Heindon Road, Arcata, CA 95521 for consideration in plan implementation, as potential plan amendments, or as otherwise appropriate. The period for filing protests begins when the EPA publishes in the **Federal Register** its Notice of Receipt of the FEIS containing the proposed resource management plan. To be considered ''timely'' the protest must be postmarked no later than the last day of the 30-day protest period. Also, although not a requirement, it is recommended that the protest be sent by certified mail, return receipt requested. E-mail protests will not be accepted. Faxed protests will be considered as potential valid protests provided (1) that the signed faxed letter is received by the Washington Office protest coordinator by the closing date of the protest period and (2) that the protesting party also provides the original letter by either regular or overnight mail postmarked by the close of the protest period. Please direct faxed protests to ''BLM Protest Coordinator'' at 202–452–5112. Please direct the follow-up letter to the appropriate address provided below. Protest must be filed in writing to: Director (210), Attention: Brenda Williams, P.O. Box 66538, Washington, DC 20035; or by overnight mail to: Director (210), Attention: Brenda Williams, 1620 L Street NW., Suite 1075, Washington, DC 20036. In order to be considered complete, the protest must contain, at a minimum, the following information:

1. The name, mailing address, telephone number, and interest of the person filing the protest.
2. A statement of the issue or issues being protested.
3. A statement of the part or parts of the plan being protested. To the extent possible, this should be done by reference to specific pages, paragraphs, sections, tables, maps, etc. included in the proposed RMP.
4. A copy of all documents addressing the issue or issues which were submitted during the planning process or a reference to the date the issue or issues were discussed by you for the record.
5. A concise statement explaining why the decision of the BLM California State Director is believed to be incorrect. This is a critical part of the protest. Take care to document all relevant facts. As much as possible, reference or cite the planning documents, environmental analysis documents, available planning records (*i.e.* meeting minutes or summaries, correspondence, *etc.*) A protest which merely expresses disagreement with the proposed decision, without supporting data will not provide additional basis for the Director's review of the decision.

Please note that comments, including names and street addresses of respondents, are available for public review and/or release under the Freedom of Information Act (FOIA). Individual respondents may request confidentiality. Respondents who wish to withhold name and/or street address from public review or from disclosure under FOIA, must state this prominently at the beginning of the written comment. Such requests will be honored to the extent allowed by law. All submissions from organizations or businesses, and from individuals identifying themselves as representatives or officials of organizations or businesses, will be made available for public inspection in their entirety.

The Director will promptly render a decision on the protest. The decision will be in writing and will be sent to the protesting party by certified mail, return receipt requested. The decision of the Director shall be the final decision of the Department of the Interior.

Dated: April 21, 2003.

Lynda J. Roush,

Arcata Field Manager.

Editorial Note: This document was received at the Office of the Federal Register on September 29, 2003.

[FR Doc. 03–24980 Filed 10–9–03; 8:45 am]

BILLING CODE 4310–40–P

DEPARTMENT OF THE INTERIOR

Bureau of Land Management

[UT–910–04–1150–PH–24–1A]

Notice of Resource Advisory Council Meeting

AGENCY: Bureau of Land Management, Department of Interior.

ACTION: Notice of Utah Resource Advisory Council (RAC) meeting.

SUMMARY: In accordance with the Federal Land Policy and Management Act (FLPMA) and the Federal Advisory Committee Act of 1972 (FACA), the U.S. Department of the Interior, Bureau of Land Management (BLM) Utah Resource Advisory Council (RAC) will meet as indicated below.

DATES: A one-day meeting is scheduled for November 6, at the Sheraton Hotel, Seasons South Conference Room, 150 West 500 South, Salt Lake City, Utah. The meeting will begin at 8 a.m. and conclude at 5 p.m.

FOR FURTHER INFORMATION: Contact Sherry Foot, Special Programs Coordinator, Utah State Office, Bureau of Land Management, 324 South State Street, Salt Lake City, Utah, 84111; phone (801) 539–4195.

SUPPLEMENTARY INFORMATION: A one-day meeting is being held to welcome the

new Resource Advisory Council (RAC) members; discuss reports from the raptor, OHV, and Sustaining Working Landscapes subgroups; and a briefing on the wilderness policy. From 4:15 p.m.—4:45 p.m. the public will have an opportunity for public comments. If you are unable to attend the meeting, written comments can be sent to the Bureau of Land Management, Attn: Sherry Foot, PO Box 451155, Salt Lake City Utah, 84145–0155.

All meetings are open to the public; however, transportation, lodging and meals are the responsibility of the participating public.

Dated: October 3, 2003;

Sally Wisely,

State Director.

[FR Doc. 03–25697 Filed 10–9–03; 8:45 am]

BILLING CODE 4310–DQ–M

DEPARTMENT OF THE INTERIOR

Bureau of Land Management

[ID–080–1030–PH]

Notice of Public Meeting, Upper Columbia-Salmon Clearwater Resource Advisory Council Meeting; Idaho

AGENCY: Bureau of Land Management, Interior.

ACTION: Notice of public meeting.

SUMMARY: In accordance with the Federal Land Policy and Management Act (FLPMA) and the Federal Advisory Committee Act of 1972 (FACA), the U.S. Department of the Interior, Bureau of Land Management (BLM) Upper Columbia-Salmon Clearwater (UCSC) District Resource Advisory Council (RAC) will meet as indicated below.

DATES: November 12 and 13, 2003. The meeting will begin at 1 a.m. on the first day and end at approximately 2 p.m. on the second day. The public comment period will be from 11–12 p.m. on November 13th. The meeting will be held at the Grant Creek Inn, 5280 Grant Creek Road, Missoula, Montana, because Missoula is centrally located for Council members traveling from the northern and south-central parts of Idaho.

FOR FURTHER INFORMATION CONTACT: Stephanie Snook, RAC Coordinator, BLM UCSC District, 1808 N. Third Street, Coeur d'Alene, Idaho 83814 or telephone (208) 769–5004.

SUPPLEMENTARY INFORMATION: The 15-member Council advises the Secretary of the Interior, through the Bureau of Land Management, on a variety of planning and management issues associated with public land management in Idaho. The following topics will be discussed at the November 12 and 13, 2003 meeting:

- RAC orientation, BLM/RAC 2003 overview, development of Annual Work Plan, and election of officers.
- Off-highway Vehicles (subgroup report), Wild Horse Program, and other natural resource issues.
- Updates on the Idaho BLM organizational changes.

All meetings are open to the public. The public may present written comments to the Council. Each formal Council meeting will also have time allocated for hearing public comments. Depending on the number of persons wishing to comment and time available, the time for individual oral comments may be limited. Individuals who plan to attend and need special assistance, such as sign language interpretation, tour transportation or other reasonable accommodations, should contact the BLM as provided above.

Dated: October 6, 2003.

Fritz U. Rennebaum,

District Manager.

[FR Doc. 03–25698 Filed 10–9–03; 8:45 am]

BILLING CODE 4310–GG–P

DEPARTMENT OF THE INTERIOR

Bureau of Land Management

[71% to CO–956–1420–BJ–0000–241A; 7½% to CO–956–1910–BJ–4717–241A; 7½% to CO–956–7130–BJ–7382–241A; 14% to CO–956–9820–BJ–CO01–241A]

Colorado: Filing of Plats of Survey

October 1, 2003.

SUMMARY: The plats of survey of the following described land will be officially filed in the Colorado State Office, Bureau of Land Management, Lakewood, Colorado, effective 10:00 am., October 1, 2003. All inquiries should be sent to the Colorado State Office, Bureau of Land Management, 2850 Youngfield Street, Lakewood, Colorado 80215–7093.

The plat, amending the longitude for the corner of sections 15, 16, 21 and 22, in Township 14 South, Range 68 West, Sixth Principal Meridian, Group 750, Colorado, was accepted July 21, 2003.

The plat representing the dependent resurvey and survey of Amended Tract 147, in Township 1 South, Range 71 West, Sixth Principal Meridian, Group 1364, Colorado, was accepted July 28, 2003.

The plat representing the dependent resurvey and survey, in Township 11 North, Range 101 West, Sixth Principal Meridian, Group 1389, Colorado, was accepted August 5, 2003.

The plat representing the dependent resurvey and survey in Section 23, of Township 2 South, Range 103 West, Sixth Principal Meridian, Group 1377, Colorado, was accepted August 18, 2003.

The plat, (in 7 sheets), representing the dependent resurveys and surveys in Section 24, of Township 1 North, Range 72 West, Sixth Principal Meridian, Group 1236, Colorado, was accepted August 20, 2003.

The plat, (in 8 sheets), representing the dependent resurveys and surveys in Section 13, of Township 1 North, Range 72 West, Sixth Principal Meridian, Group 1236, Colorado, was accepted September 17, 2003.

The plat representing the dependent resurvey and survey in Township 8 South, Range 97 East, Sixth Principal Meridian, Group 1278, Colorado, was accepted September 25, 2003.

The plat representing the dependent resurvey and survey in Township 8 South, Range 98 West, Sixth Principal Meridian, Group 1278, Colorado, was accepted September 25, 2003.

The plat representing the dependent resurvey and survey in Township 9 South, Range 97 East, Sixth Principal Meridian, Group 1278, Colorado, was accepted September 25, 2003.

The plat representing the dependent resurvey and survey in Township 9 South, Range 98 West, Sixth Principal Meridian, Group 1278, Colorado, was accepted September 25, 2003.

These surveys and plats were requested by the Bureau of Land Management for administrative and management purposes.

The plat, of the entire record, representing the dependent resurvey, in Township 22 South, Range 73 West, Sixth Principal Meridian, Group 1235, Colorado, was accepted August 28, 2003.

The plat, (in 2 sheets), of the entire record, representing the dependent resurvey, in Township 23 South, Range 73 West, Sixth Principal Meridian, Group 1235, Colorado, was accepted August 28, 2003.

These surveys, and plats were requested by the Forest Supervisor, Pike and San Isabel National Forests, to identify forest boundaries for administrative and management purposes.

The plat representing the dependent resurvey and survey in Township 3 South, Range 74 West, Sixth Principal Meridian, Group 1351, Colorado, was accepted September 24, 2003.

This survey and plat was requested by the Forest Supervisor, Arapaho-

Roosevelt National Forests, to identify the forest boundaries for management purposes and to prevent a possible home improvement trespass.

The plat representing the dependent resurvey and surveys in Township 34 North, Range 14 West, North of the Ute Line, New Mexico Principal Meridian, Group 1394, Colorado, was accepted September 25, 2003.

This survey and plat was requested by the National Park Service, Superintendent, Mesa Verde National Park, to identify the National Park boundaries for management purposes.

Darryl A. Wilson,

Chief Cadastral Surveyor for Colorado.

[FR Doc. 03–25763 Filed 10–9–03; 8:45 am]

BILLING CODE 4310–JB–P

DEPARTMENT OF THE INTERIOR

Bureau of Land Management

[ID–957–1420–BJ]

Idaho: Filing of Plats of Survey

AGENCY: Bureau of Land Management, Interior.

ACTION: Notice of filing of plats of surveys.

SUMMARY: The Bureau of Land Management (BLM) has officially filed the plats of survey of the lands described below in the BLM Idaho State Office, Boise, Idaho, effective 9 a.m., on the dates specified.

FOR FURTHER INFORMATION CONTACT: Bureau of Land Management, 1387 South Vinnell Way, Boise, Idaho, 83709–1657.

SUPPLEMENTARY INFORMATION: These surveys were executed at the request of the Bureau of Land Management to meet certain administrative needs of the Bureau of Land Management. The lands we surveyed are:

The plat representing the dependent resurvey of a portion of the Boise Meridian (west boundary, Township 1 North, Range 1 East) and a portion of the subdivisional lines, and the subdivision of section 13, in T. 1 N., R. 1 W., Boise Meridian, Idaho, was accepted July 17, 2003.

The plat constituting the entire survey record of the dependent resurvey of a portion of the south boundary and of the subdivisional lines, in T. 5 S., R. 28 E., Boise Meridian, Idaho, was accepted July 31, 2003.

The plats representing the entire survey record of the dependent resurvey of portions of the east boundary, subdivisional lines, and Mineral Survey Nos. 2001 and 2411, in T. 2 N., R. 4 E., Boise Meridian, Idaho, was accepted August 13, 2003.

The plat representing the dependent resurvey of a portion of the south boundary, and a portion of the subdivisional lines, and the subdivision of sections, 26, 27, 32, 33, and 34, in T. 14 N., R. 28 E., Boise Meridian, Idaho, was accepted September 2, 2003.

The plat constituting the entire survey record of the dependent resurvey of a portion of the subdivisional lines, in T. 8 S., R. 29 E., Boise Meridian, Idaho, was accepted September 4, 2003.

These surveys were executed at the request of the Bureau of Land Management to meet certain administrative needs of the Bureau of Indian Affairs. The lands we surveyed are:

The plat representing the dependent resurvey of a portion of the north boundary, a portion of the subdivisional lines, and the subdivision of certain sections and the survey of lots 7 and 8 in section 4 and lots 1 and 2 in section 9, in T. 46 N., R. 5 W., Boise Meridian, Idaho, was accepted on August 15, 2003.

The plat representing the dependent resurvey of portions of the north boundary and subdivisional lines, the subdivision of section 5, the survey of the 2000–2002 meander lines of the right bank, an informative traverse of the left bank and the survey of the 2000–2002 median line of the South Fork of the Clearwater River in section 5, in T. 31 N., R. 4 E., Boise Meridian, Idaho, was accepted September 29, 2003.

The plat representing the dependent resurvey of a portion of the subdivisional lines and the subdivision of section 14, in T. 36 N., R. 4 W., Boise Meridian, Idaho, was accepted September 29, 2003.

The plat representing the dependent resurvey of a portion of the subdivisional lines, the adjusted 1892 meanders and the 2002–2003 survey of the meanders of the right banks of the Clearwater and North Fork of the Clearwater Rivers, the subdivision of section 33, and the survey of lot No. 9 in section 33, in T. 37 N., R. 1 E., Boise Meridian, Idaho, was accepted September 29, 2003.

Dated: October 6, 2003.

Harry K. Smith,

Chief Cadastral Surveyor for Idaho.

[FR Doc. 03–25696 Filed 10–9–03; 8:45 am]

BILLING CODE 4310–GG–P

DEPARTMENT OF THE INTERIOR

Minerals Management Service

Notice on Outer Continental Shelf (OCS) Oil and Gas Lease Sales

AGENCY: Minerals Management Service, Interior.

ACTION: List of restricted joint bidders.

SUMMARY: Pursuant to the authority vested in the Director of the MMS by the joint bidding provisions of 30 CFR 256.41, each entity within one of the following groups shall be restricted from bidding with any entity in any other of the following groups at OCS oil and gas lease sales to be held during the bidding period November 1, 2003, through April 30, 2004. The List of Restricted Joint Bidders published April 28, 2003, in the **Federal Register** at 68 FR 81 covered the period May 1, 2003, through October 31, 2003.

Group I.
- Exxon Mobil Corporation
- ExxonMobil Exploration Company

Group II.
- Shell Oil Company
- Shell Offshore Inc.
- SWEPI LP
- Shell Frontier Oil & Gas Inc.
- Shell Consolidated Energy Resources Inc.
- Shell Land & Energy Company
- Shell Onshore Ventures Inc.
- Shell Offshore Properties and Capital II, Inc.
- Shell Rocky Mountain Production LLC
- Shell Gulf of Mexico Inc.

Group III.
- BP American Production Company
- BP Exploration & Production Inc.
- BP Exploration (Alaska) Inc.

Group IV.
- TOTAL E&P USA, Inc.

Group V.
- ChevronTexaco Corporation
- Chevron U.S.A. Inc.
- Texaco Inc.
- Texaco Exploration and Production Inc.

Dated: September 24, 2003.

Walter D. Cruickshank,

Acting Director, Minerals Management Service.

[FR Doc. 03–25738 Filed 10–9–03; 8:45 am]

BILLING CODE 4310–MR–P

DEPARTMENT OF THE INTERIOR

Bureau of Reclamation

Colorado River Basin Salinity Control Advisory Council

AGENCY: Bureau of Reclamation, Interior.

ACTION: Notice of public meeting.

SUMMARY: The Colorado River Basin Salinity Control Advisory Council

(Council) was established by the Colorado River Basin Salinity Control Act of 1974 (Pub. L. 93–320) (Act) to receive reports and advise federal agencies on implementing the Act. In accordance with the Federal Advisory Committee Act, the Bureau of Reclamation announces that the Council will meet as detailed below.

DATES AND LOCATION: The Council will conduct its annual meeting at the following time and location:

October 28, 2003—Santa Fe, New Mexico—The meeting will be held in the Inn at Loretto located at 211 Old Santa Fe Trail. The meeting will begin at 1 p.m., recess at 5 p.m., and reconvene briefly the following day at 12 noon.

ADDRESSES: The meeting of the Council is open to the public. Any member of the public may file written statements with the Council before, during, or up to 30 days after the meeting, in person or by mail. To the extent that time permits, the Council chairman may allow public presentation of oral comments at the meeting. To allow full consideration of information by Council members, written notice must be provided to Kib Jacobson, Bureau of Reclamation, Upper Colorado Regional Office, 125 South State Street, Room 6107, Salt Lake City, Utah 84138–1147; telephone (801) 524–3753; faxogram (801) 524–5499; e-mail at: *kjacobson@uc.usbr.gov* at least FIVE (5) days prior to the meeting. Any written comments received prior to the meeting will be provided to Council members at the meeting.

SUPPLEMENTARY INFORMATION: The purpose of the meeting will be to discuss the accomplishments of federal agencies and make recommendations on future activities to control salinity. Council members will be briefed on the status of salinity control activities and receive input for drafting the Council's annual report. The Bureau of Reclamation, Bureau of Land Management, U.S. Fish and Wildlife Service, and United States Geological Survey of the Department of the Interior; the Natural Resources Conservation Service of the Department of Agriculture; and the Environmental Protection Agency will each present a progress report and a schedule of activities on salinity control in the Colorado River Basin. The Council will discuss salinity control activities and the contents of the reports.

It is the Bureau of Reclamation's practice to make comments, including names and home addresses of respondents, available for public review. Individual respondents may request that their home address be withheld from public disclosure, which will be honored to the full extent allowable by law. To have your name and/or address withheld, please state this prominently at the beginning of your comment. Submissions from organizations or businesses, and from individuals identifying themselves as representatives or officials of organizations or businesses, will be made available for public disclosure in their entirety.

FOR FURTHER INFORMATION CONTACT: Kib Jacobson, telephone (801) 524–3753; faxogram (801) 524–5499; e-mail at: *kjacobson@uc.usbr.gov.*

Dated: August 21, 2003.

Rick L. Gold,

Regional Director—Upper Colorado Region, Bureau of Reclamation.

[FR Doc. 03–24375 Filed 10–9–03; 8:45 am]

BILLING CODE 4310–MN–P

INTERNATIONAL TRADE COMMISSION

[USITC SE–03–031]

Sunshine Act Meeting

AGENCY HOLDING THE MEETING: United States International Trade Commission.

TIME AND DATE: October 16, 2003 at 11 a.m.

PLACE: Room 101, 500 E Street SW., Washington, DC 20436, Telephone: (202) 205–2000.

STATUS: Open to the public.

Matters to be Considered

1. Agenda for future meetings: none.
2. Minutes.
3. Ratification List.
4. Inv. No. TA–421–4 (Certain Ductile Iron Waterworks Fittings from China)—briefing and vote on critical circumstances, and, if necessary, preliminary market disruption and provisional measures. (The Commission is currently scheduled to transmit its determination on critical circumstances, and, if necessary, preliminary market disruption and provisional measures determinations to the President on or before October 20, 2003.)
5. Outstanding action jackets: none.

In accordance with Commission policy, subject matter listed above, not disposed of at the scheduled meeting, may be carried over to the agenda of the following meeting.

Issued: October 8, 2003.

By order of the Commission.

Marilyn R. Abbott,

Secretary to the Commission.

[FR Doc. 03–25899 Filed 10–8–03; 1:09 pm]

BILLING CODE 7020–02–P

DEPARTMENT OF JUSTICE

Office of Justice Programs

[OJP(OJP) Docket No. 1389]

Amber Alert Technology Conference

AGENCY: Office of Justice Programs, Justice.

ACTION: Notice of conference.

SUMMARY: The Office of Justice Programs is announcing the AMBER Alert Technology Conference to showcase products that are available to support local, State, and regional AMBER Alert programs.

DATES: The conference will be held on December 3–4, 2003.

ADDRESSES: The conference will take place at the Peabody Hotel, 149 Union Avenue, Memphis, Tennessee 38103.

FOR FURTHER INFORMATION CONTACT: Ron Laney, Associate Administrator, Child Protection Division, Office of Juvenile Justice and Delinquency Prevention, OJP, 202–616–3637. (This is not a toll-free number.)

SUPPLEMENTARY INFORMATION: An AMBER Alert Technology Conference will be held on December 3–4, 2003 at the Peabody Hotel in Memphis, Tennessee. AMBER Alert Plan representatives from throughout the country will participate in this event. The conference is designed to showcase products that are available to support local, State, and regional AMBER Alert programs. The conference is sponsored by the Department of Justice's Office of Justice Programs.

If you are interested in participating in this event, please contact Ron Laney at 202–616–3637 no later than October 17, 2003. Please provide your name, the name of your organization, and contact information (phone, fax, e-mail). An information packet will be faxed to interested individuals. Organizations participating in this conference will be responsible for their own expenses, including transportation, lodging, meals, set-up fees, media/equipment rentals, and incidentals.

Dated: October 2, 2003.

Deborah J. Daniels,

Assistant Attorney General, Office of Justice Programs.

[FR Doc. 03–25751 Filed 10–9–03; 8:45 am]

BILLING CODE 4410–18–P

DEPARTMENT OF LABOR

Office of the Secretary

Submission for OMB Review; Comment Request

September 15, 2003.

The Department of Labor (DOL) has submitted the following public information collection request (ICR) to the Office of Management and Budget (OMB) for review and approval in accordance with the Paperwork Reduction Act of 1995 (Pub. L. 104–13, 44 U.S.C. Chapter 35). A copy of this ICR, with applicable supporting documentation, may be obtained by contacting the Department of Labor. To obtain documentation, contact Darrin King on 202–693–4129 (this is not a toll-free number) or E-Mail: *king.darrin@dol.gov.*

Comments should be sent to Office of Information and Regulatory Affairs, Attn: OMB Desk Officer for the Bureau of Labor Statistics (BLS), Office of Management and Budget, Room 10235, Washington, DC 20503 (202–395–7316/ this is not a toll-free number), within 30 days from the date of this publication in the **Federal Register**.

The OMB is particularly interested in comments which:

- Evaluate whether the proposed collection of information is necessary for the proper performance of the functions of the agency, including whether the information will have practical utility;
- Evaluate the accuracy of the agency's estimate of the burden of the proposed collection of information, including the validity of the methodology and assumptions used;
- Enhance the quality, utility, and clarity of the information to be collected; and
- Minimize the burden of the collection of information on those who are to respond, including through the use of appropriate automated, electronic, mechanical, or other technological collection techniques or other forms of information technology, *e.g.,* permitting electronic submission of responses.

Agency: Bureau of Labor Statistics.

Type of Review: Reinstatement, without change, of a previously approved collection for which approval has expired.

Title: CPS Displaced Worker, Job Tenure, and Occupational Mobility Supplement.

OMB Number: 1220–0104.

Affected Public: Individuals or households.

Type of Response: Reporting.

Frequency: Biennially.

Number of Respondents: 58,000.

Annual Responses: 58,000.

Average Response Time: 8 minutes.

Annual Burden Hours: 7,733.

Total Annualized Capital/Startup Costs: $0.

Total Annual Costs (operating/ maintaining systems or purchasing services): $0.

Description: The information collected will be used to determine the size and nature of the population affected by job displacements and, hence, the needs and scope of job training programs serving adult displaced workers. these data also will measure the severity of the displacement problem, and assess employment stability.

Ira L. Mills,

Departmental Clearance Officer.

[FR Doc. 03–25702 Filed 10–09–03; 8:45 am]

BILLING CODE 4510–43–M

DEPARTMENT OF LABOR

Office of the Secretary

Submission for OMB Review; Comment Request

September 25, 2003.

The Department of Labor (DOL) has submitted the following public information collection requests (ICRs) to the Office of Management and Budget (OMB) for review and approval in accordance with the Paperwork Reduction Act of 1995 (Pub. L. 104–13, 44 U.S.C. Chapter 35). A copy of each individual ICR, with applicable supporting documentation, may be obtained by calling the Department of Labor. To obtain documentation, contact Darrin King on 202–693–4129 (this is not a toll-free number) or E-Mail: *king.darrin@dol.gov.*

Comments should be sent to Office of Information and Regulatory Affairs, Attn: OMB Desk Officer for the Mine Safety and Health Administration (MSHA), Office of Management and Budget, Room 10235, Washington, DC 20503 (202–395–7316 / this is not a toll-free number), within 30 days from the date of this publication in the **Federal Register**.

The OMB is particularly interested in comments which:

- Evaluate whether the proposed collection of information is necessary for the proper performance of the functions of the agency, including whether the information will have practical utility;
- Evaluate the accuracy of the agency's estimate of the burden of the proposed collection of information, including the validity of the methodology and assumptions used;
- Enhance the quality, utility, and clarity of the information to be collected; and
- Minimize the burden of the collection of information on those who are to respond, including through the use of appropriate automated, electronic, mechanical, or other technological collection techniques or other forms of information technology, e.g., permitting electronic submission of responses.

Agency: Mine Safety and Health Administration.

Type of Review: Extension of a currently approved collection.

Title: Escape and Evacuation Plans (Pertains to Surface Coal Mines and Surface Work Areas of Underground Coal Mines).

OMB Number: 1219–0051.

Affected Public: Business or other for-profit.

Frequency: On occasion.

Type of Response: Recordkeeping.

Number of Respondents: 183.

Number of Annual Responses: 183.

Average Response Time: Approximately 5 hours to prepare a new escape and evacuation plan and approximately 2.5 hours to revise an existing plan.

Total Estimated Burden Hours: 878.

Total Annualized Capital/Startup Costs: $0.

Total Annual Costs (operating/ maintaining systems or purchasing services): $0.

Description: 30 CFR 77.1101 required coal mine operators to establish and keep current a specific escape and evacuation plan to be followed in the event of a fire. The plan is used to instruct employees in the proper method of exiting work areas.

Agency: Mine Safety and Health Administration.

Type of Review: Extension of a currently approved collection.

Title: Records of Preshift and Onshift Inspections of Slope and Shaft Areas (Pertains to Slope and Shaft Sinking Operations at Coal Mines).

OMB Number: 1219–0082.

Affected Public: Business or other for-profit.

Frequency: Each shift.

Type of Response: Recordkeeping.

Number of Respondents: 35.

Number of Annual Responses: 11,858.

Average Response Time: 1.25 hours.

Total Estimated Burden Hours: 14,823.

Total Annualized Capital/Startup Costs: $0.

Total Annual costs (operating/maintaining systems or purchasing services: $0.

Description: 30 CFR 77.1901 requires coal mine operators to conduct examinations of slope and shaft areas for hazardous conditions, including tests for methane and oxygen deficiencies, before and during each shift and before blasting. Records of the results of the inspections are required to be kept.

Ira L. Mills,

Departmental Clearance Officer.

[FR Doc. 03–25703 Filed 10–9–03; 8:45 am]

BILLING CODE 4510–43–M

DEPARTMENT OF LABOR

Employment and Training Administration

[TA–W–52,695]

Agere Systems, Irwindale, California; Notice of Termination of Investigation

Pursuant to Section 221 of the Trade Act of 1974, an investigation was initiated on August 27, 2003, in response to a worker petition filed on behalf of workers at Agere Systems, Irwindale, California.

The petition regarding the investigation has been deemed invalid. Petitions must be signed by three workers, a duly authorized representative of such workers, the employer of such workers, or an appropriate state official.

The petition submitted in this case does not contain valid signatures of any of the above. Consequently, further investigation in this case would serve no purpose, and the investigation has been terminated.

Signed in Washington, DC, this 10th day of September, 2003.

Richard Church,

Certifying Officer, Division of Trade Adjustment Assistance.

[FR Doc. 03–25720 Filed 10–9–03; 8:45 am]

BILLING CODE 4510–30–P

DEPARTMENT OF LABOR

Employment and Training Administration

[TA–W–52,694]

Apparel Ventures, Inc., South Gate, California; Notice of Termination of Investigation

Pursuant to Section 221 of the Trade Act of 1974, as amended, an investigation was initiated on August 27, 2003, in response to a petition filed by a company official on behalf of workers at Apparel Ventures, Inc., South Gate, California.

The petitioner has requested that the petition be withdrawn. Consequently, the investigation has been terminated.

Signed at Washington, DC, this 9th day of September, 2003.

Richard Church,

Certifying Officer, Division of Trade Adjustment Assistance.

[FR Doc. 03–25732 Filed 10–9–03; 8:45 am]

BILLING CODE 4510–30–P

DEPARTMENT OF LABOR

Employment and Training Administration

[TA–W–52,641]

Ault Incorporated, Minneapolis, MN; Notice of Termination of Investigation

Pursuant to Section 221 of the Trade Act of 1974, an investigation was initiated on August 21, 2003 in response to a worker petition which was filed by a company official on behalf of workers at Ault Incorporated, Minneapolis, Minnesota (TA–W–52,641).

The petitioner has requested that the petition be withdrawn. Consequently, further investigation in this case would serve no purpose, and the investigation has been terminated.

Signed in Washington, DC, this 8th day of September 2003.

Richard Church,

Certifying Officer, Division of Trade Adjustment Assistance.

[FR Doc. 03–25733 Filed 10–9–03; 8:45 am]

BILLING CODE 4510–30–P

DEPARTMENT OF LABOR

Employment and Training Administration

[TA–W–52,726]

Brad Aga Set Net Operation, Larsen Bay, Alaska; Notice of Termination of Investigation

Pursuant to section 221 of the Trade Act of 1974, as amended, an investigation was initiated on September 3, 2003, in response to a petition filed by a company official on behalf of workers of the Brad Aga Set Net Operation, Larsen Bay, Alaska.

The investigation revealed that the subject firm did not separate or threaten to separate a significant number or proportion of workers as required by section 222 of the Trade Act of 1974. Significant number or proportion of the workers means that at least three workers in a firm with a workforce of fewer than 50 workers would have to be affected. Separations by the subject firm did not meet this threshold level; consequently the investigation has been terminated.

Signed at Washington, DC, this 10th day of September, 2003.

Linda G. Poole,

Certifying Officer, Division of Trade Adjustment Assistance.

[FR Doc. 03–25719 Filed 10–9–03; 8:45 am]

BILLING CODE 4510–30–P

DEPARTMENT OF LABOR

Employment and Training Administration

[TA–W–52,819]

BSN-Jobst, Inc., Rutherford College, NC; Notice of Termination of Investigation

Pursuant to section 221 of the Trade Act of 1974, as amended, an investigation was initiated on September 11, 2003, in response to a worker petition filed by a company official on behalf of workers at BSN-Jobst, Inc., Rutherford College, North Carolina.

The petitioner has requested that the petition be withdrawn. Consequently, the investigation has been terminated.

Signed at Washington, DC, this 17th day of September, 2003.

Richard Church,

Certifying Officer, Division of Trade Adjustment Assistance.

[FR Doc. 03–25718 Filed 10–9–03; 8:45 am]

BILLING CODE 4510–30–P

DEPARTMENT OF LABOR

Employment and Training Administration

Investigations Regarding Certifications of Eligibility To Apply for Worker Adjustment Assistance

Petitions have been filed with the Secretary of Labor under section 221(a) of the Trade Act of 1974 (''the Act'') and are identified in the Appendix to this notice. Upon receipt of these petitions, the Director of the Division of Trade Adjustment Assistance, Employment and Training Administration, has instituted investigations pursuant to section 221(a) of the Act.

The purpose of each of the investigations is to determine whether the workers are eligible to apply for

adjustment assistance under Title II, chapter 2, of the Act. The investigations will further relate, as appropriate, to the determination of the date on which total or partial separations began or threatened to begin and the subdivision of the firm involved.

The petitioners or any other persons showing a substantial interest in the subject matter of the investigations may request a public hearing, provided such request is filed in writing with the Director, Division of Trade Adjustment Assistance, at the address shown below, not later than October 20, 2003.

Interested persons are invited to submit written comments regarding the subject matter of the investigations to the Director, Division of Trade Adjustment Assistance, at the address shown, below, not later than October 20, 2003.

The petitions filed in this case are available for inspection at the Office of the Director, Division of Trade Adjustment Assistance, Employment and Training Administration, U.S. Department of Labor, Room C–5311, 200 Constitution Avenue, NW, Washington, DC 20210.

Signed at Washington, DC, this 22nd day of September 2003.

Timothy Sullivan,

Director, Division of Trade Adjustment Assistance.

APPENDIX

[Petitions instituted between 09/02/2003 and 09/05/2003]

TA–W	Subject firm (petitioners)	Location	Date of institution	Date of petition
52,708	Carolina Pad and paper Co. (Co.)	Charlotte, NC	09/02/2003	08/25/2003
52,709	Kana Software (Wkrs)	Menlo Park, CA	09/02/2003	08/27/2003
52,710	Conso International Corp. (Comp)	Union, SC	09/02/2003	08/29/2003
52,711	AT&T Wireless Services Inc. (State)	Livermore, CA	09/02/2003	08/29/2003
52,712	Maytag Appliances (Comp)	Amana, IA	09/02/2003	08/25/2003
52,713	Gilbert Brothers Fisheries (Comp)	Kodiak, AK	09/02/2003	08/28/2003
52,714	Fishing Vessel (F/V) Rimrock (Comp)	Kodiak, AK	09/02/2003	08/28/2003
52,715	Tingley Rubber (Union)	So. Plainfield, NJ	09/02/2003	08/04/2003
52,716	Uniprise (Wkrs)	Dayton, OH	09/02/2003	08/29/2003
52,717	PSC Metals Inc. (Comp)	Cleveland, OH	09/02/2003	08/19/2003
52,718	I.T.W. Foils (Wkrs)	East Brunswick, NJ	09/02/2003	08/21/2003
52,719	Padgett Furniture Mfg. Cop., Inc. (Comp)	Calhoun, TN	09/02/2003	08/25/2003
52,720	Ampenol T&M Antennas (Wkrs)	Vernon Hills, IL	09/02/2003	08/28/2003
52,721	Cascade Fibers Company (Wkrs)	Sanford, NC	09/02/2003	08/28/2003
52,722	Conso International Corp (Comp)	Union, SC	09/02/2003	08/29/2003
52,723	W–Phone, Inc. (state)	Highlands Ranch, CO	09/02/2003	08/28/2003
52,724	F/V Ruthie (Comp)	Petersburg, AK	09/03/2003	08/20/2003
52,725	Fishing Vessel (F/V) Bad Betty (Comp)	Homer, AK	09/03/2003	08/19/2003
52,726	Brad Aga Setnet Operation (Comp)	Larsen Bay, AK	09/03/2003	08/21/2003
52,727	Pryor Fish Camp (Comp)	Kodiak, AK	09/03/2003	08/20/2003
52,728	TRW Automotive (MN)	Rushford, MN	09/03/2003	08/25/2003
52,729	TRW Automotive Electronics (MN)	Winona, MN	09/03/2003	08/25/2003
52,730	Berwick Weaving, Inc. (Wkrs)	Berwick, PA	09/03/2003	08/15/2003
52,731	Heraeus Quartztech, Inc. (NJ)	Fairfield, NJ	09/03/2003	08/29/2003
52,732	Agere Systems (IBEW)	Reading, PA	09/03/2003	08/15/2003
52,733	Implementation Strategies, Inc. (Comp)	Brooklyn, NY	09/03/2003	08/26/2003
52,734	Bend Tec, Inc. (MN)	Duluth, MN	09/03/2003	08/22/2003
52,735	Guardian Industries Corporation (Comp)	Lewistown, PA	09/03/2003	08/21/2003
52,736	Lala Ellen Knitting (Comp)	Fort Payne, AL	09/03/2003	08/21/2003
52,737	TriQuint Optoelectronics (Comp)	Breinigsville, PA	09/03/2003	08/18/2003
52,738	Vermont Tubbs (Comp)	Brandon, VT	09/03/2003	08/19/2003
52,739	Springs Industries (Comp)	Gainesville, GA	09/03/2003	08/26/2003
52,740	HV Wood Products, Inc. (Comp)	Hughesville, PA	09/03/2003	08/28/2003
52,741	Ettco Tool Co. (IAMAW)	York, PA	09/03/2003	08/21/2003
52,742	Fishercast, Inc. (Comp)	Watertown, NY	09/03/2003	08/17/2003
52,743	Hewlett Packard (ID)	Boise, ID	09/03/2003	08/27/2003
52,744	Rockwell Automation (Comp)	Dublin, GA	09/03/2003	08/26/2003
52,745	Erie Power Technologies, Inc. (Wkrs)	Erie, PA	09/03/2003	08/28/2003
52,746	Plano Molding Company (Comp)	Plano, IL	09/03/2003	08/26/2003
52,747	Sligh Furniture Company (Comp)	Holland, MI	09/03/2003	08/26/2003
52,748	Honeywell Industry Solutions (Wkrs)	Phoenix, AZ	09/03/2003	08/28/2003
52,749	Akin Industries (Comp)	Monticello, AR	09/03/2003	08/25/2003
52,750	Penn Union Corporation (Wkrs)	Edinboro, PA	09/03/2003	07/20/2003
52,751	Cliffs Mining Services Company (Wkrs)	Ishpeming, MI	09/03/2003	08/19/2003
52,752	TRW (Comp)	Jackson, MI	09/03/2003	08/27/2003
52,753	Metal Powder Products Company (Comp)	Coldwater, MI	09/03/2003	08/08/2003
52,754	ACS Industries, Inc. (Comp)	Woonsocket, RI	09/04/2003	08/20/2003
52,755	Fishing Vessel (F/V) Kaja marie (Comp)	Camano Island, WA	09/04/2003	08/31/2003
52,756	West Point Fisheries (Comp)	Bend, Or	09/04/2003	08/27/2003
52,757	State of Alaska Commission Fisheries (Comp)	Soldotna, AK	09/04/2003	08/29/2003
52,758	Bear Garden Fisheries (Comp)	Kodiak, AK	09/04/2003	08/31/2003
52,759	F/V K2 (Comp)	Cordova, AK	09/04/2003	08/25/2003
52,760	Fishing Vessel (F/V) Freedom (Comp)	Mt. Vernon, WA	09/04/2003	08/21/2003
52,761	Fishing Vessel (F/V) Leopard (Comp)	Kenai, AK	09/04/2003	09/02/2003
52,762	TT Group, Inc. (Comp)	Aurora, MO	09/04/2003	08/29/2003
52,763	Philadelphia Chewing Gum Corporation (Comp)	Havertown, PA	09/04/2003	08/22/2003

APPENDIX—Continued

[Petitions instituted between 09/02/2003 and 09/05/2003]

TA–W	Subject firm (petitioners)	Location	Date of institution	Date of petition
52,764	Bimex Industries (AFLCIO)	Wales, WI	09/04/2003	09/03/2003
52,765	Micro Motion, Inc. (Comp)	Boulder, CO	09/04/2003	09/03/2003
52,766	American Suessen Corp. (NC)	Charlotte, NC	09/04/2003	08/28/2003
52,767	Karen Manufacturing (NJ)	Elizabeth, NJ	09/04/2003	08/04/2003
52,768	Titan Plastics Group (Comp)	Portage, MI	09/04/2003	08/27/2003
52,769	American Fiber and Finishing, Inc. (Comp)	Newberry, SC	09/05/2003	09/05/2003
52,770	Tower Mills, Inc. (Comp)	Burlington, NC	09/05/2003	08/27/2003
52,771	Central-PA Distribution and Warehouse (Wkrs)	Reedsville, PA	09/05/2003	09/04/2003
52,772	Baltimore Marine Ind. (IAMAW)	Baltimore, MD	09/05/2003	09/05/2003
52,773	Lebanite Corporation (WCIW)	Lebanon, OR	09/05/2003	09/03/2003
52,774	Weyersaeuser Company (Wkrs)	N. Bend, OR	09/05/2003	09/03/2003

[FR Doc. 03–25705 Filed 10–9–03; 8:45 am]

BILLING CODE 4510–30–M

DEPARTMENT OF LABOR

Employment and Training Administration

[TA–W–37,240]

Chevron Products Company, Roosevelt, UT; Notice of Revised Determination on Reopening

The Department of Labor reopened the petition investigation for workers of the subject firm.

The TAA petition filed with the Department on behalf of workers of Chevron Products Company, Roosevelt, Utah, was initiated on February 4, 2000. The petition investigation concluded that the subject firm did not produce an article and therefore its workers were not eligible for certification. The negative determination was issued on February 17, 2000, and published in the **Federal Register** on March 17, 2000 (65 FR 14627).

However, the Department determines on reopening that because Chevron Products Company, Roosevelt, Utah is affiliated with Chevron USA Production Company (as both are wholly owned subsidiaries of Chevron USA, Inc.) the Department finds the two firms constituted an integrated production process, the final products of which are crude oil and natural gas.

The Department, on July 6, 1999, issued a certification of eligibility for workers of Chevron USA Production Company in Utah, to apply for trade adjustment assistance (TA–W–36,295I). That certification was supported by increased company imports of crude oil in January-March 1999 compared to the same time period of 1998. Therefore, the Department certifies the Chevron Products, Roosevelt, Utah, workers as eligible for assistance under TAA.

The same worker group had been denied eligibility to apply for NAFTA–TAA under petition number NAFTA–3854. The United States Court of International Trade (USCIT) remanded for further investigation the Secretary of Labor's negative NAFTA–TAA determination in *Former Employees of Chevron Products Company* v. *U.S. Secretary of Labor* (00–08–00409). Further investigation in that remand resulted in a negative decision. The USCIT again remanded that petition denial for further investigation and ordered the Department to again consider whether the workers lost their jobs because of increased imports and whether the Chevron Products Company workers could be determined eligible for NAFTA–TAA as Secondarily Affected under the ''Statement of Administrative Action.''

Although we conducted an additional investigation about whether the Chevron Products workers were production workers, we believe that our decision that Chevron Products is an appropriate subdivision of Chevron USA moots both that inquiry and the inquiry into whether the workers qualify as secondary workers under the Statement of Administrative Action. Since the workers were a part of a firm which produces an article, crude oil, under Labor's existing rules, the characterization of the workers as production or service workers becomes irrelevant because that distinction only arises in cases where the workers are employed by separate firms or there are subdivisions within the firm that produce articles that are separately identifiable. Similarly, since the workers are part of the firm that produced the article, they cannot be secondary workers, who, by definition, are employed by separate firms.

Conclusion

After careful consideration on reopening, it is concluded that increased imports of articles like or directly competitive with crude oil produced by Chevron USA Production and its affiliate Chevron Products Company, Roosevelt, Utah, contributed importantly to the decline in sales or production and to the total or partial separation of workers of the subject firm.

In accordance with the provisions of the Trade Act of 1974, I make the following revised determination:

''All workers of Chevron Products Company, Roosevelt, Utah, who became totally or partially separated from employment on or after January 4, 1999, through two years from the date of certification, are eligible to apply for adjustment assistance under Section 223 of the Trade Act of 1974.''

Signed in Washington, DC, this 25th day of September 2003.

Linda G. Poole,

Certifying Officer, Division of Trade Adjustment Assistance.

[FR Doc. 03–25726 Filed 10–9–03; 8:45 am]

BILLING CODE 4510–30–P

DEPARTMENT OF LABOR

Employment and Training Administration

[TA–W–52,706]

Compaq Computer Corporation, Denver, CO; Notice of Termination of Investigation

Pursuant to Section 221 of the Trade Act of 1974, an investigation was initiated on August 29, 2003 in response to a worker petition which was filed by the State TAA Coordinator on behalf of workers at Compaq Computer Corporation, Denver, Colorado.

The petitioner has requested that the petition be withdrawn. Consequently, the investigation has been terminated.

Signed in Washington, DC, this 8th day of September, 2003.

Richard Church,

Certifying Officer, Division of Trade Adjustment Assistance.

[FR Doc. 03–25731 Filed 10–9–03; 8:45 am]

BILLING CODE 4510–30–P

DEPARTMENT OF LABOR

Employment and Training Administration

[TA–W–51,938]

The Eureka Company, White Consolidated Ltd., Electrolux Professional, Inc., El Paso, Texas; Amended Certification Regarding Eligibility To Apply for Worker Adjustment Assistance

In accordance with section 223 of the Trade Act of 1974 (19 U.S.C. 2273) the Department of Labor issued a Certification of Eligibility to Apply for Worker Adjustment Assistance on June 17, 2003, applicable to workers of The Eureka Company, El Paso, Texas. The notice was published in the **Federal Register** on July 3, 2003 (68 FR 39977).

At the request of the State agency, the Department reviewed the certification for workers of the subject firm. The workers are engaged in the production of vacuum cleaners.

New information shows that some workers separated from employment at the subject firm had their wages reported under a separate unemployment insurance (UI) tax account for White Consolidated LTD., Electrolux Professional, Inc.

Accordingly, the Department is amending the certification to properly reflect this matter.

The intent of the Department's certification is to include all workers of The Eureka Company, White Consolidated LTD., Electrolux Professional, Inc., El Paso, Texas who were adversely affected by increased imports.

The amended notice applicable to TA–W–51,938 is hereby issued as follows:

All workers of The Eureka Company, White Consolidated LTD., Electrolux Professional, Inc., El Paso, Texas, who became totally or partially separated from employment on or after May 9, 2003, through June 17, 2005, are eligible to apply for adjustment assistance under section 223 of the Trade Act of 1974.

Signed at Washington, DC this 30th day of September 2003.

Richard Church,

Certifying Officer, Division of Trade Adjustment Assistance.

[FR Doc. 03–25711 Filed 10–9–03; 8:45 am]

BILLING CODE 4510–30–P

DEPARTMENT OF LABOR

Employment and Training Administration

[TA–W–52,714]

Fishing Vessel (F/V) Rimrock, Kodiak, AK; Notice of Termination of Investigation

Pursuant to Section 221 of the Trade Act of 1974, as amended, an investigation was initiated on September 2, 2003 in response to a petition filed by a company official on behalf of workers of the Fishing Vessel (F/V) Rimrock, Kodiak, Alaska.

All workers were separated from the subject firm more than one year before the date of the petition. Section 223(b) of the Act specifies that no certification may apply to any worker whose last separation occurred more than one year before the date of the petition. Consequently, further investigation in this case would serve no purpose, and the investigation has been terminated.

Signed in Washington, DC this 10th day of September, 2003.

Linda G. Poole,

Certifying Officer, Division of Trade Adjustment Assistance.

[FR Doc. 03–25730 Filed 10–9–03; 8:45 am]

BILLING CODE 4510–30–P

DEPARTMENT OF LABOR

Employment and Training Administration

[TA–W–52,523]

Hanes Dye & Finishing Company, Winston-Salem, NC; Notice of Termination of Investigation

Pursuant to Section 221 of the Trade Act of 1974, an investigation was initiated on August 12, 2003 in response to a worker petition which was filed by a company official on behalf of workers at Hanes Dye & Finishing Company, Winston-Salem, North Carolina.

The petitioner has requested that the petition be withdrawn. Consequently, the investigation has been terminated.

Signed in Washington, DC, this 9th day of September 2003.

Richard Church,

Certifying Officer, Division of Trade Adjustment Assistance.

[FR Doc. 03–25736 Filed 10–9–03; 8:45 am]

BILLING CODE 4510–30–P

DEPARTMENT OF LABOR

Employment and Training Administration

[TA–W–52,235]

Honeywell Nylon, Inc., Including Leased Workers of Base Corporation Fiber Division, Anderson, South Carolina; Amended Certification Regarding Eligibility To Apply for Worker Adjustment Assistance

In accordance with Section 223 of the Trade Act of 1974 (19 U.S.C. 2273) the Department of Labor issued a Certification of Eligibility to Apply for Worker Adjustment Assistance on August 1, 2003, applicable to workers of Honeywell Nylon, Inc., Anderson, South Carolina. The notice was published in the **Federal Register** on August 18, 2003 (68 FR 49523).

At the request of the State agency, the Department reviewed the certification for workers of the subject firm. The workers are engaged in the production of nylon fibers.

Information provided by the company shows that all employees of the Anderson, South Carolina location of the subject firm are leased employees of BASF Corporation, Fiber Division.

Information also shows that workers separated from employment at the subject firm had their wages reported under a separate unemployment insurance (UI) tax account for BASF Corporation.

Based on these findings, the Department is amending this certification to include temporary workers of BASF Corporation, Fiber Division working at Honeywell Nylon, Inc., Anderson, North Carolina.

The intent of the Department's certification is to include all workers of Honeywell Nylon, Inc. who was adversely affected by increased imports.

The amended notice applicable to TA–W–52,235 is hereby issued as follows:

All workers of Honeywell Nylon, Inc., including leased workers of BASF Corporation, Fiber Division, Anderson, South Carolina, who became totally or partially separated from employment on or after July 7, 2002, through August 1, 2005, are eligible to apply for adjustment assistance under Section 223 of the Trade Act of 1974.

Signed at Washington, DC this 10th day of September 2003.

Richard Church,

Certifying Officer, Division of Trade Adjustment Assistance.

[FR Doc. 03–25707 Filed 10–9–03; 8:45 am]

BILLING CODE 4510–30–P

DEPARTMENT OF LABOR

Employment and Training Administration

[TA–W–52,733]

Implementation Strategies, Inc., Brooklyn, NY; Notice of Termination of Investigation

Pursuant to Section 221 of the Trade Act of 1974, as amended, an investigation was initiated on September 3, 2003 in response to a petition filed by a company official on behalf of workers of Implementation Strategies, Inc., Brooklyn, New York.

The petition regarding the investigation has been deemed invalid. In order to establish a valid worker group, there must be at least three full-time workers employed at some point during the period under investigation. Workers of the group subject to this investigation did not meet this threshold level of employment. Consequently, the investigation has been terminated.

Signed in Washington, DC this 10th day of September 2003.

Richard Church,

Certifying Officer, Division of Trade Adjustment Assistance.

[FR Doc. 03–25727 Filed 10–9–03; 8:45 am]

BILLING CODE 4510–30–P

DEPARTMENT OF LABOR

Employment and Training Administration

[TA–W–52,822]

JacksonLea, Santa Fe Springs, California; Notice of Termination of Investigation

Pursuant to section 221 of the Trade Act of 1974, an investigation was initiated on September 11, 2003, in response to a petition filed by a company official on behalf of workers at JacksonLea, Santa Fe Springs, California.

The petitioner has requested that the petition be withdrawn. Consequently, the investigation has been terminated.

Signed in Washington, DC, this 17th day of September, 2003.

Richard Church,

Certifying Officer, Division of Trade Adjustment Assistance.

[FR Doc. 03–25717 Filed 10–9–03; 8:45 am]

BILLING CODE 4510–30–P

DEPARTMENT OF LABOR

Employment and Training Administration

Investigations Regarding Certifications of Eligibility To Apply for Worker Adjustment Assistance

Petitions have been filed with the Secretary of Labor under Section 221(a) of the Trade Act of 1974 (''the Act'') and are identified in the Appendix to this notice. Upon receipt of these petitions, the Director of the Division of Trade Adjustment Assistance, Employment and Training Administration, has instituted investigations pursuant to Section 221(a) of the Act.

The purpose of each of the investigations is to determine whether the workers are eligible to apply for adjustment assistance under Title II, Chapter 2, of the Act. The investigations will further relate, as appropriate, to the determination of the date on which total or partial separations began or threatened to begin and the subdivision of the firm involved.

The petitioners or any other persons showing a substantial interest in the subject matter of the investigations may request a public hearing, provided such request is filed in writing with the Director, Division of Trade Adjustment Assistance, at the address shown below, not later than October 20, 2003.

Interested persons are invited to submit written comments regarding the subject matter of the investigations to the Director, Division of Trade Adjustment Assistance, at the address shown below, not later than October 2003.

The petitions filed in this case are available for inspection at the Office of the Director, Division of Trade Adjustment Assistant, Employment and Training Administration, U.S. Department of Labor, Room C–5311, 200 Constitution Avenue, NW., Washington, DC 20210.

Signed at Washington, DC, this 12th day of September 2003.

Timothy Sullivan,

Director, Division of Trade Adjustment Assistance.

APPENDIX

[Petitions instituted between 08/25/2003 and 08/29/2003]

TA–W	Subject firm (petitioners)	Location	Date of institution	Date of petition
52,670	Joy Mining Machinery (Wkrs)	Abingdon, VA	08/26/2003	08/21/2003
52,671	Siebel Systems (CA	Emeryville, CA	08/25/2003	08/19/2003
52,672	Intel Corporation (Comp)	Hillsboro, CA	08/25/2003	08/22/2003
52,673	Belden Wire and Cable (Comp)	Richmond, IN	08/25/2003	08/22/2003
52,674	ADM Milling Company (MN)	Minneapolis, MN	08/25/2003	08/22/2003
52,675	Bills/Bonus Dollar Store (Wkrs)	Adamsville, TN	08/25/2003	08/19/2003
52,676A	Defender Services (Wkrs)	Salisbury, NC	08/25/2003	08/22/2003
52,676B	Defender Services (Wkrs)	Concord, NC	08/25/2003	08/22/2003
52,676C	Defender Services (Wkrs)	Eden, NC	08/25/2003	08/22/2003
52,676	Defender Services (Wkrs)	Kannapolis, NC	08/25/2003	08/22/2003
52,677	Westinghouse Electric Company (Wkrs)	Monroeville, PA	08/25/2003	08/23/2003
52,678	Cooper Industries (Comp)	Montebello, CA	08/25/2003	08/15/2003
52,679	GN Netcom (Comp)	Nashua, NH	08/25/2003	08/25/2003
52,680	Vaughan Furniture Company (Comp)	Johnson City, TN	08/26/2003	08/21/2003
52,681	Reuther Mold and Mfg. (Wkrs)	Cuyahoga Falls, OH	08/26/2003	08/15/2003
52,682	Continental Teves (Comp)	Asheville, NC	08/26/2003	08/18/2003
52,683	Thomasville Furniture Industries, Inc. (Comp)	Thomasville, NC	08/26/2003	08/25/2003
52,684	PSC Metals, Inc. (Comp)	Cleveland, OH	8/26/2003	8/19/2003
52,685	Mead Westvaco (Comp)	Greenville, GA	08/26/2003	08/21/2003
52,686	Avi Corporation (Comp)	Queensbury, NY	08/26/2003	08/14/2003

APPENDIX—Continued

[Petitions instituted between 08/25/2003 and 08/29/2003]

TA–W	Subject firm (petitioners)	Location	Date of institution	Date of petition
52,687	Renfro Corporation (Comp)	Pulaski, VA	08/27/2003	08/15/2003
52,688	Howes Leather Corporation (Comp)	Curwensville, PA	08/27/2003	08/26/2003
52,689	Alkahn Labels, (Comp)	Cochran, GA	08/27/2003	08/15/2003
52,690	Zawick Manufacturing (UNITE)	Hellertown, PA	08/27/2003	08/19/2003
52,691	American Bag Corp. (Comp)	Winfield, TN	08/27/2003	08/26/2003
52,692	Lego Systems, Inc. (Wkrs)	Enfield, CT	08/27/2003	08/15/2003
52,693	CTS Corporation (UAW)	Elkhart, IN	08/27/2003	08/21/2003
52,694	Apparel Ventures (Comp)	South Gate, CA	08/27/2003	08/25/2003
52,695	Agere Systems (Wkrs)	Tewindale, CA	08/27/2003	08/18/2003
52,696	Hilti (Wkrs)	Tulsa, OK	08/28/2003	08/26/2003
52,697	Pryor Fish Camp (Comp)	Kodiak, AK	08/28/2003	08/20/2003
52,698	Rohm and Haas Company (Wkrs)	Philadelphia, PA	08/28/2003	08/28/2003
52,699	Delphi Automotive Systems (IUE)	Moraine, OH	08/28/2003	08/11/2003
52,700	Circuit Science (MN)	Plymouth, MN	08/28/2003	08/27/2003
52,701	DB Systems, Inc. (WA)	Redmond, WA	08/28/2003	08/27/2003
52,702	Atlas Castings and Technology (Wkrs)	Tacoma, WA	08/29/2003	08/25/2003
52,703	McMurray Fabrics Jamesville, Inc. (Comp)	Jamesville, NC	08/29/2003	08/18/2003
52,704	Brindar (Comp)	Gresham, OR	08/29/2003	08/26/2003
52,705	Trojan Steel Co. (Wkrs)	Charleston, WV	08/29/2003	08/22/2003
52,706	Compaq Computer Corp. (CO)	Denver, CO	08/29/2003	08/27/2003
52,707	Parker Hannifin Co. (Wkrs)	Green Camp, OH	08/29/2003	08/27/2003

[FR Doc. 03–25706 Filed 10–9–03; 8:45 am]

BILLING CODE 4510–30–M

DEPARTMENT OF LABOR

Employment and Training Administration

[TA–W–52,692]

Lego Systems, Inc., Shows & Events Department, Enfield, Connecticut; Notice of Termination of Investigation

Pursuant to section 221 of the Trade Act of 1974, as amended, an investigation was initiated on August 27, 2003, in response to a worker petition filed on behalf of workers at Lego Systems, Inc., Shows 7 Events Department, Enfield, Connecticut.

The petitioner has requested that the petition be withdrawn. Consequently, the investigation has been terminated.

Signed at Washington, DC, this 9th day of September, 2003.

Richard Church,

Certifying Officer, Division of Trade Adjustment Assistance.

[FR Doc. 03–25721 Filed 10–9–03; 8:45 am]

BILLING CODE 4510–30–P

DEPARTMENT OF LABOR

Employment and Training Administration

[TA–W–51,650]

Markwins Beauty Products, Inc., Formerly Known as AM Cosmetics, North Arlington, NJ; Amended Certification Regarding Eligibility To Apply for Worker Adjustment Assistance

In accordance with section 223 of the Trade Act of 1974 (19 U.S.C. 2273) the Department of Labor issued a Certification of Eligibility to Apply for Worker Adjustment Assistance on May 9, 2003, applicable to workers of Markwins Beauty Products, Inc., North Arlington, New Jersey. The notice was published in the **Federal Register** on June 3, 2003 (68 FR 33197).

At the request of the State agency, the Department reviewed the certification for workers of the subject firm. The workers were engaged in the production of cosmetics. The subject firm originally named AM Cosmetics was renamed Markwins Beauty Products, Inc. in March, 2003. The State agency reports that some workers wages at the subject firm are being reported under the Unemployment Insurance (UI) tax account for AM Cosmetics, North Arlington, New Jersey.

Accordingly, the Department is amending the certification to properly reflect this matter.

The intent of the Department's certification is to include all workers of Markwins Beauty Products, Inc. who were adversely affected by increased imports.

The amended notice applicable to TA–W–51,650 is hereby issued as follows:

All workers of Markwins Beauty Products, Inc., formerly known as AM Cosmetics, North Arlington, New Jersey, who became totally or partially separated from employment on or after April 10, 2002, through May 9, 2005, are eligible to apply for adjustment assistance under section 223 of the Trade Act of 1974.

Signed at Washington, DC this 10th day of September 2003.

Richard Church,

Certifying Officer, Division of Trade Adjustment Assistance.

[FR Doc. 03–25712 Filed 10–9–03; 8:45 am]

BILLING CODE 4510–30–P

DEPARTMENT OF LABOR

Employment and Training Administration

[TA–W–50,852]

Micro Instrument Co., Escondido, CA; Notice of Revised Determination on Reconsideration

By letter postmarked June 17, 2003, a company official requested administrative reconsideration regarding the Department's Negative Determination Regarding Eligibility to Apply for Worker Adjustment Assistance, applicable to the workers of the subject firm.

The initial investigation resulted in a negative determination issued on May

12, 2003, based on the finding that imports of electronic testing equipment did not contribute importantly to worker separations at the subject plant and no shift of production to a foreign source occurred. The denial notice was published in the **Federal Register** on June 3, 2003 (68 FR 33197).

To support the request for reconsideration, the company official supplied additional major declining customers to supplement those that were survey during the initial investigation. Upon further review and contact with these customers of the subject firm, it was revealed that they increased their import purchases of semiconductor testing equipment during the relevant period. The imports accounted for a meaningful portion of the subject plant's lost sales and production.

Conclusion

After careful review of the additional facts obtained on reconsideration, I conclude that increased imports of articles like or directly competitive with those produced at Micro Instrument Company, Escondido, California, contributed importantly to the declines in sales or production and to the total or partial separation of workers at the subject firm. In accordance with the provisions of the Act, I make the following certification:

All workers of Micro Instrument Company, Escondido, California, who became totally or partially separated from employment on or after January 31, 2002 through two years from the date of this certification, are eligible to apply for adjustment assistance under Section 223 of the Trade Act of 1974.

Signed in Washington, DC, this 29th day of September, 2003.

Elliott S. Kushner,

Certifying Officer, Division of Trade Adjustment Assistance.

[FR Doc. 03–25716 Filed 10–9–03; 8:45 am]

BILLING CODE 4510–30–P

DEPARTMENT OF LABOR

Employment and Training Administration

[TA–W–52,619]

Miller Casket Co., Jermyn, PA; Notice of Termination of Investigation

Pursuant to section 221 of the Trade Act of 1974, as amended, an investigation was initiated on August 19, 2003, in response to a worker petition filed on behalf of workers at Miller Casket Company, Jermyn, Pennsylvania.

The petitioner has requested that the petition be withdrawn. Consequently, the investigation has been terminated.

Signed at Washington, DC, this 9th day of September, 2003.

Richard Church,

Certifying Officer, Division of Trade Adjustment Assistance.

[FR Doc. 03–25724 Filed 10–9–03; 8:45 am]

BILLING CODE 4510–30–P

DEPARTMENT OF LABOR

Employment and Training Administration

[TA–W–52,152]

Multilayer Technology (Multek), Inc., A Division of Flextronics International Including Temporary Workers of 1st Choice Employment, Inc., Roseville, Minnesota; Amended Certification Regarding Eligibility To Apply for Worker Adjustment Assistance

In accordance with section 223 of the Trade Act of 1974 (19 U.S.C. 2273) the Department of Labor issued a Certification of Eligibility to Apply for Worker Adjustment Assistance on July 25, 2003, applicable to workers of Multilayer Technology (Multek), Inc., a division of Flextronics International, Roseville, Minnesota. The notice was published in the **Federal Register** on August 14, 2003 (68 FR 48646).

At the request of the State agency, the Department reviewed the certification for workers of the subject firm. Information provided by the company shows that temporary workers of 1st Choice Employment, Inc. were employed at Multilayer Technology (Multek), Inc. to produce printed circuit boards at the Roseville, Minnesota location of the subject firm.

Based on these findings, the Department is amending this certification to include temporary workers of 1st Choice Employment, Inc. working at Multilayer Technology (Multek), Inc., Roseville, Minnesota.

The intent of the Department's certification is to include all workers of Multilayer Technology (Multek), Inc., who were adversely affected by the shift in production to Brazil, Germany and China.

The amended notice applicable to TA–W–52,152 is hereby issued as follows:

All workers of Multilayer Technology (Multek), Inc., a division of Flextronics International, Roseville, Minnesota, and temporary workers of 1st Choice Employment, Inc., White Bear Lake, Minnesota producing printed circuit boards at Multilayer Technology (Multek), Inc., Roseville, Minnesota, who became totally or partially separated from employment on or after June 25, 2002, through July 25, 2005, are eligible to apply for adjustment assistance under section 223 of the Trade Act of 1974.

Signed at Washington, DC this 25th day of August 2003.

Linda G. Poole,

Certifying Officer, Division of Trade Adjustment Assistance.

[FR Doc. 03–25710 Filed 10–9–03; 8:45 am]

BILLING CODE 4510–30–P

DEPARTMENT OF LABOR

Employment and Training Administration

[TA–W–51,189]

Nokia, Inc., Broadband Systems Division, Santa Rosa, CA; Notice of Negative Determination Regarding Application for Reconsideration

By application of May 27, 2003, a petitioner requested administrative reconsideration of the Department's negative determination regarding eligibility for workers and former workers of the subject firm to apply for Trade Adjustment Assistance (TAA). The denial notice was signed on April 29, 2003 and published in the **Federal Register** on May 9, 2003 (68 FR 25060).

Pursuant to 29 CFR 90.18(c) reconsideration may be granted under the following circumstances:

(1) If it appears on the basis of facts not previously considered that the determination complained of was erroneous;

(2) If it appears that the determination complained of was based on a mistake in the determination of facts not previously considered; or

(3) If in the opinion of the Certifying Officer, a mis-interpretation of facts or of the law justified reconsideration of the decision.

The TAA petition, filed on behalf of workers at Nokia, Inc., Broadband Systems Division, Santa Rosa, California engaged in the employment related to research and development for Digital Subscriber Multiplexers (DSLM), was denied because the workers did not produce an article within the meaning of section 222 of the Trade Act of 1974.

The petitioner alleges that workers were engaged in production. In a follow up contact, it was clarified that the petitioner wished it noted that workers at the facility did perform occasional assembly and testing of final DSLM production within the two years prior to the plant shut down, as well as production of DSLM prototypes for the parent company. He concluded that all

of this production was shifted to Finland and that the production was used to service a United States customer base.

A company official was contacted in regard to these allegations. As a result of this contact, it was revealed that prototype production did constitute a portion of work performed at the subject facility and that this production did shift to Finland. However, it was stated that these prototypes were rarely shipped to the U.S., as they were used for production in Finland for internal company use. The official further indicated that assembly and testing of other production constituted a very small portion of work performed at the subject facility.

Conclusion

After review of the application and investigative findings, I conclude that there has been no error or misinterpretation of the law or of the facts which would justify reconsideration of the Department of Labor's prior decision. Accordingly, the application is denied.

Signed at Washington, DC, this 11th day of September, 2003.

Elliott S. Kushner,

Certifying Officer, Division of Trade Adjustment Assistance.

[FR Doc. 03–25715 Filed 10–9–03; 8:45 am]

BILLING CODE 4510–30–P

DEPARTMENT OF LABOR

Employment and Training Administration

[TA–W–52,588]

Paxar Corporation, Lenoir, North Carolina; Notice of Termination of Investigation

Pursuant to Section 221 of the Trade Act of 1974, as amended, an investigation was initiated on August 18, 2003 in response to a petition filed by a company official on behalf of workers of Paxar Corporation, Lenoir, North Carolina.

The petitioner has requested that the petition be withdrawn. Consequently, the investigation has been terminated.

Signed at Washington, DC, this 10th day of September 2003.

Linda G. Poole,

Certifying Officer, Division of Trade Adjustment Assistance.

[FR Doc. 03–25735 Filed 10–9–03; 8:45 am]

BILLING CODE 4510–30–P

DEPARTMENT OF LABOR

Employment and Training Administration

[TA–W–52,161]

Progressive Screen Engraving, Inc., North Carolina Division, Wadesboro, North Carolina; Notice of Negative Determination Regarding Application for Reconsideration

By application of August 19, 2003, a company official requested administrative reconsideration of the Department's negative determination regarding eligibility to apply for Trade Adjustment Assistance (TAA), applicable to workers and former workers of the subject firm. The denial notice was signed on July 25, 2003, and published in the **Federal Register** on August 14, 2003 (68 FR 48645).

Pursuant to 29 CFR 90.18(c) reconsideration may be granted under the following circumstances:

(1) If it appears on the basis of facts not previously considered that the determination complained of was erroneous;

(2) If it appears that the determination complained of was based on a mistake in the determination of facts not previously considered; or

(3) If in the opinion of the Certifying Officer, a mis-interpretation of facts or of the law justified reconsideration of the decision.

The petition for the workers of Progressive Screen Engraving, Inc., North Carolina Division, Wadesboro, North Carolina was denied because the ''contributed importantly'' group eligibility requirement of Section 222 of the Trade Act of 1974 was not met, and there was not a shift of production to a foreign source. The ''contributed importantly'' test is generally demonstrated through a survey of customers of the workers' firm. The survey revealed that none of the respondents increased their purchases of imported rotary screens.

The petitioning company official states that ''we have been informed by our customers that they are able to have screens made at a much cheaper price overseas.'' When contacted for further customers to support this claim, the official clarified that, in fact, the rotary screens were not being imported by customers. The official elaborated that the screens were used in the production of textiles, and customers were shifting their textile production abroad. The official concluded that, because these textiles are being imported, the subject firm workers producing the rotary screens were import impacted. The petitioning official further requested a detailed explanation of what would lead to a negative decision for TAA eligibility in regard to subject firm workers under both primary and secondary impact.

In addressing the particular eligibility criteria to assess worker eligibility under primary impact, the Department is directed by current legislation to conduct an investigation to establish if the company has shifted its production to a foreign source or if imports of products like or directly competitive with those produced at the subject firm contributed importantly to subject firm layoffs. To that end, the Department obtains relevant information from the subject firm and subject firm customers. In this case, the investigation revealed that the company did not shift production and there were no increased imports of rotary screens on the part of the subject firm or its customers.

Although not applied for in the petition that instigated this investigation, workers can also apply for TAA benefits alleging ''secondary impact.'' In order to be eligible through this channel, the subject firm must have customers that are TAA certified, and these TAA certified customers must represent a significant portion of subject firm business. In addition, the subject firm would have to produce a component part of the product that was the basis for the customers' certification (upstream supplier), or assemble or finish a product that was the basis for certification (downstream producer). In this case however, the subject firm does not act as an upstream supplier (screens do not form a component part of textiles), nor do they act as downstream producers (screen production does not constitute performing assembling or finishing of textiles). Thus, even if the subject firm did have TAA certified customers, they would not be eligible under secondary impact.

Conclusion

After review of the application and investigative findings, I conclude that there has been no error or misinterpretation of the law or of the facts which would justify reconsideration of the Department of Labor's prior decision. Accordingly, the application is denied.

Signed at Washington, DC this 29th day of September, 2003.

Elliott S. Kushner,

Certifying Officer, Division of Trade Adjustment Assistance.

[FR Doc. 03–25709 Filed 10–9–03; 8:45 am]

BILLING CODE 4510–30–P

DEPARTMENT OF LABOR

Employment and Training Administration

[TA–W–52,717]

PSC Metals, Inc., Cleveland, OH; Notice of Termination of Investigation

Pursuant to Section 221 of the Trade Act of 1974, an investigation was initiated on September 2, 2003, in response to a petition filed by a company official on behalf of workers at PSC Metals, Inc., Cleveland, Ohio.

This petitioning group of workers is covered by an earlier petition filed on August 26, 2003 (TA–W–52,684) that is the subject of an ongoing investigation for which a determination has not yet been issued. Consequently, further investigation in this case would serve no purpose, and the investigation has been terminated.

Signed in Washington, DC this 10th day of September 2003.

Elliott S. Kushner,

Certifying Officer, Division of Trade Adjustment Assistance.

[FR Doc. 03–25729 Filed 10–9–03; 8:45 am]

BILLING CODE 4510–30–P

DEPARTMENT OF LABOR

Employment and Training Administration

[TA–W–52,177]

Redman Knitting Inc., Ridgewood, New York; Notice of Negative Determination Regarding Application for Reconsideration

By application of September 2, 2003, a worker requested administrative reconsideration of the Department's negative determination regarding eligibility to apply for Trade Adjustment Assistance (TAA), applicable to workers and former workers of the subject firm. The denial notice was signed on July 29, 2003, and published in the **Federal Register** on August 14, 2003 (68 FR 48643).

Pursuant to 29 CFR 90.18(c) reconsideration may be granted under the following circumstances:

(1) If it appears on the basis of facts not previously considered that the determination complained of was erroneous;

(2) If it appears that the determination complained of was based on a mistake in the determination of facts not previously considered; or

(3) If in the opinion of the Certifying Officer, a mis-interpretation of facts or of the law justified reconsideration of the decision.

The petition for the workers of Redman Knitting Inc., Ridgewood, New York was denied because the ''contributed importantly'' group eligibility requirement of Section 222(3) of the Trade Act of 1974, as amended, was not met. The ''contributed importantly'' test is generally demonstrated through a survey of customers of the workers' firm. The survey revealed that none of the respondents increased their purchases of imported knitted fabric.

The worker states that the production of knitted fabric made at the subject firm was used by customer(s) for production of knitted sweaters, and that customer(s) are now importing completed sweaters.

Contact with a company official confirmed that major declining customer(s) of the subject firm are importing completed sweaters. However, imports of sweaters are not ''like or directly competitive'' with the product produced (knitted fabric) by the subject firm. Therefore, customer imports in this case are not relevant in meeting the eligibility requirement of Section 222(3) of the Trade Act of 1974 under primary impact.

Further, major declining customer(s) of the subject firm are not certified for TAA, thus the subject firm workers are not eligible under secondary impact.

Conclusion

After review of the application and investigative findings, I conclude that there has been no error or misinterpretation of the law or of the facts which would justify reconsideration of the Department of Labor's prior decision. Accordingly, the application is denied.

Signed at Washington, DC this 25th day of September 2003.

Linda G. Poole,

Certifying Officer, Division of Trade Adjustment Assistance.

[FR Doc. 03–25708 Filed 10–9–03; 8:45 am]

BILLING CODE 4510–30–P

DEPARTMENT OF LABOR

Employment and Training Administration

[TA–W–51,361]

Sisiutl Fisheries, Kodiak, AK; Notice of Revised Determination on Reconsideration

By letter of April 24, 2003, the company official requests administrative reconsideration of the Department's Negative Determination Regarding Eligibility for workers and former workers of Sisiutl Fisheries, Kodiak, Alaska to apply for worker adjustment assistance, under petition number TA–W–51,361. The notice was issued on April 16, 2003, and published in the **Federal Register** on May 1, 2003 (68 FR 23322).

The initial petition was denied because the investigation found that the subject firm did not meet the group eligibility requirements of a primary firm under Section 222(a) of the Trade Act of 1974, as amended. The subject firm did not import fresh or chilled salmon, nor did Sisiutl Fisheries, Kodiak, Alaska shift production abroad. Furthermore, the firm's major declining customer increased its reliance on domestic purchases of fresh or chilled salmon during the relevant time period.

The petitioner states that the workers of Sisiutl Fisheries, Kodiak, Alaska, are secondarily affected because they lost at least 20 percent of their business with a salmon processor whose workers were certified eligible to apply for trade adjustment assistance.

Reconsideration findings show that the TAA petition form indicated that workers of the subject firm were secondarily affected. The company official clarified the customer information that was provided during the investigation. This new information supports the petitioner's claim that workers of Sisiutl Fisheries, Kodiak, Alaska, lost at least 20 percent of its sales to a salmon processor whose workers were certified eligible to apply for trade adjustment assistance.

Conclusion

In accordance with the provisions of the Act, I make the following revised determination:

All workers of Sisiutl Fisheries, Kodiak, Alaska, who became totally or partially separated from employment on or after March 21, 2002, through two years from the date of the certification, are eligible to apply for worker adjustment assistance under section 223 of the Trade Act of 1974.

Signed in Washington, DC this 25th day of September, 2003.

Linda G. Poole,

Certifying Officer, Division of Trade Adjustment Assistance.

[FR Doc. 03–25714 Filed 10–9–03; 8:45 am]

BILLING CODE 4510–30–P

DEPARTMENT OF LABOR

Employment and Training Administration

[TA–W–52,652]

Snap-on Tools, Mt. Carmel, Illinois; Notice of Termination of Investigation

Pursuant to section 221 of the Trade Act of 1974, as amended, an investigation was initiated on August 21, 2003, in response to a worker petition filed by company officials on behalf of workers at Snap-on Tools, Mt. Carmel, Illinois.

The company has requested that the petition be withdrawn. Consequently, the investigation has been terminated.

Signed at Washington, DC, this 8th day of September, 2003.

Elliott S. Kushner,

Certifying Officer, Division of Trade Adjustment Assistance.

[FR Doc. 03–25723 Filed 10–9–03; 8:45 am]

BILLING CODE 4510–30–P

DEPARTMENT OF LABOR

Employment and Training Administration

Investigations Regarding Certifications of Eligibility To Apply for Worker Adjustment Assistance

Petitions have been filed with the Secretary of Labor under section 221(a) of the Trade Act of 1974 (''the Act'') and are identified in the Appendix to this notice. Upon receipt of these petitions, the Director of the Division of Trade Adjustment Assistance, Employment and Training Administration, has instituted investigations pursuant to section 221(a) of the Act.

The purpose of each of the investigations is to determine whether the workers are eligible to apply for adjustment assistance under Title II, chapter 2, of the Act. The investigations will further relate, as appropriate, to the determination of the date on which total or partial separations began or threatened to begin and the subdivision of the firm involved.

The petitioners or any other persons showing a substantial interest in the subject matter of the investigations may request a public hearing, provided such request is filed in writing with the Director, Division of Trade Adjustment Assistance, at the address shown below, not later than October 20, 2003.

Interested persons are invited to submit written comments regarding the subject matter of the investigations to the Director, Division of Trade Adjustment Assistance, at the address shown below, not later than October 20, 2003.

The petitions filed in this case are available for inspection at the Office of the Director, Division of Trade Adjustment Assistance, Employment and Training Administration, U.S. Department of Labor, Room C–5311, 200 Constitution Avenue, NW., Washington, DC 20210.

Signed at Washington, DC this 26th day of September 2003.

Timothy Sullivan,

Director, Division of Trade Adjustment Assistance.

APPENDIX

[Petitions instituted between 09/08/2003 and 09/12/2003]

TA–W	Subject firm (petitioners)	Location	Date of institution	Date of petition
52,775	Taylor Precision Products (Comp)	Fletcher, NC	09/08/2003	08/15/2003
52,776	Biddle Precision (Wkrs)	Sheridan, IN	09/08/2003	09/03/2003
52,777	Steelcase, Inc.	Grand Rapids, MI	09/08/2003	08/12/2003
52,778	Titan Tire (Wkrs)	Brownsville, TX	09/08/2003	08/28/2003
52,779	Avondale Mills, Inc. (Wkrs)	Sylacauga, AL	09/08/2003	08/22/2003
52,780	SPX Dock Products (IBT)	Milwaukee, WI	09/09/2003	09/08/2003
52,781	Wellington Synthetic Fibers (Comp)	Leesville, SC	09/09/2003	09/02/2003
52,782	Progressive Processing (Comp)	Elyria, OH	09/09/2003	09/02/2003
52,783	Crystal Creative Products (Comp)	Maysville, KY	09/09/2003	08/20/2003
52,784	JLG Omniquip, Inc. (IAM)	Port Washington, WI	09/10/2003	09/05/2003
52,785	Gould Electronics, Inc. (Comp)	McConnelsville, OH	09/10/2003	08/18/2003
52,786	Excelsior Foundry Company (GMP)	Belleville, IL	09/10/2003	08/21/2003
52,787	Western Technology Services, Int'l, Inc. (Comp)	Casper, WY	09/10/2003	08/26/2003
52,788	Springs Industries (Comp)	Lancaster, SC	09/10/2003	08/28/2003
52,789	Alkahn Labels (Comp)	Cochran, GA	09/11/2003	08/28/2003
52,790	Hanes Dye and Finishing Co. (Comp)	Winston-Salem, NC	09/11/2003	09/04/2003
52,791	Rothtec Engraving Corp. (Comp)	Spartanburg, SC	09/11/2003	08/19/2003
52,792	RST and B Quilting and Bedding Co., Inc. (Comp)	Woodruff, SC	09/11/2003	09/02/2003
52,793	Milligan and Higgins (UNITE)	Johnstown, NY	09/11/2003	09/02/2003
52,794	Practice Partner, Inc. (Wkrs)	Goldsboro, NC	09/11/2003	09/03/2003
52,795	CSC (Wkrs)	York, PA	09/11/2003	08/25/2003
52,796	Halliburton (Comp)	Prudhoe Bay, AK	09/11/2003	09/02/2003
52,797	Alcatel (Wkrs)	Allen, TX	09/11/2003	08/17/2003
52,798	ADC the Broadband Co. (Wkrs)	Eden Prairie, MN	09/11/2003	08/27/2003
52,799	Western Metal Specialty Co. (IAM)	Milwaukee, WI	09/11/2003	09/05/2003
52,800	GE Betz (Wkrs)	Grand Rapids, MI	09/11/2003	08/31/2003
52,801	Springs Industries, Inc. (Comp)	Lancaster, SC	09/11/2003	08/28/2003
52,802	S.D. Warren (Sappi) (Wkrs)	Boston, MA	09/11/2003	09/05/2003
52,803	Norwood Yarn Sales (Wkrs)	Norwood, NC	09/11/2003	08/11/2003
52,804	Garden State Tanning (Comp)	Williamsport, MD	09/11/2003	08/26/2003
52,805	Council Craftsmen, Inc. (Comp)	Denton, NC	09/11/2003	09/08/2003
52,806	BMC Software (Wkrs)	Houston, TX	09/11/2003	08/15/2003
52,807	Brubaker Tool Corp. (Comp)	Millersburg, PA	09/11/2003	08/21/2003
52,808	Maui Pineapple Co., Ltd. (ILWU)	Kahului, HI	09/11/2003	08/22/2003
52,809	Janet, Inc. t/a Alperin (UNITE)	Scranton, PA	09/11/2003	08/14/2003
52,810	Knernschield Manufacturing Co. (Wkrs)	Columbia, MO	09/11/2003	09/04/2003
52,811	RBX Industries, Inc. (Comp)	Conover, NC	09/11/2003	09/11/2003

APPENDIX—Continued

[Petitions instituted between 09/08/2003 and 09/12/2003]

TA–W	Subject firm (petitioners)	Location	Date of institution	Date of petition
52,812	Metaldyne Sintered Co. (Comp)	St. Mary's, PA	09/11/2003	08/20/2003
52,813	Eastman Kodak Co. (Comp)	Rochester, NY	09/11/2003	09/02/2003
52,814	Precision Tool and Design (Comp)	Erie, PA	09/11/2003	08/28/2003
52,815	Siemens Energy and Automation (Comp)	Lebanon, OH	09/11/2003	08/18/2003
52,816	Kester (Comp)	Anaheim, CA	09/11/2003	08/21/2003
52,817	Spencer's, Inc. (Comp)	Mt. Airy, NC	09/11/2003	09/02/2003
52,818	Hewlett Packard (Wkrs)	Colorado Spgs., CO	09/11/2003	09/04/2003
52,819	BSN—Jobst (Comp)	Rutherford Col., NC	09/11/2003	09/05/2003
52,820	Telemundo Network Group (Wkrs)	Hialeah, FL	09/11/2003	08/28/2003
52,821	Intel Corp. (Wkrs)	Colorado Spgs., CO	09/11/2003	09/05/2003
52,822	JacksonLea (Comp)	Santa Fe Spring, CA	09/11/2003	08/20/2003
52,823	Channel Products, Inc. (Comp)	Chesterland, OH	09/11/2003	08/25/2003
52,824	Givaudan Flavoring Corp. (OH)	Cincinnati, OH	09/11/2003	08/20/2003
52,825	Lynn Dean Fashions, Inc. (Comp)	Biscoe, NC	09/11/2003	08/19/2003
52,826	Tomak Precision (OH)	Lebanon, OH	09/11/2003	08/22/2003
52,827	Dana Corp. (Wkrs)	Caldwell, OH	09/11/2003	06/09/2003
52,828	AK Steel (Wkrs)	Rockport, IN	09/11/2003	09/02/2003
52,829	New Redford Plastic Bag Co. (Comp)	New Bedford, MA	09/11/2003	08/28/2003
52,830	Surgical Specialties Corp. (Wkrs)	Ada, OK	09/11/2003	09/04/2003
52,831	SPX Dock Products (Comp)	Carrollton, TX	09/11/2003	09/03/2003
52,832	Apparel Ventures, Inc. (Comp)	South Gate, CA	09/12/2003	09/08/2003
52,833	Owenby Company (The) (Comp)	Blairsville, GA	09/12/2003	09/02/2003
52,834	Safety Stitch, Inc. (The) (Comp)	Harrisville, WV	09/12/2003	08/22/2003
52,835	Southeastern Adhesives Co. (Wkrs)	Lenoir, NC	09/12/2003	09/02/2003
52,836	AA Consultants, Inc. (Comp)	El Paso, TX	09/12/2003	09/05/2003
52,837	Sykes Enterprises (Wkrs)	Klamath Falls, OR	09/12/2003	08/27/2003
52,838	Vitco, LLC (Comp)	Nappanee, IN	09/12/2003	09/03/2003
52,938	GE Engine Services (Comp)	McAllen, TX	09/12/2003	08/27/2003
52,840	Merit Abrasive Products (Comp)	Brookville, OH	09/12/2003	08/29/2003
52,841	Wheeling-Pittsburgh Steel Corp. (Wkrs)	Steuberville, OH	09/12/2003	08/25/2003
52,842	Wal-Mart Distribution Center (Wkrs)	Laurens, SC	09/12/2003	08/27/2003
52,843	Lear Corporation (UAW)	Traverse City, MI	09/12/2003	09/05/2003
52,844	4 D's Ind. (Comp)	Tellico Plains, TN	09/12/2003	09/04/2003
52,845	Ranco North America (Comp)	Brownsville, TX	09/12/2003	08/26/2003
52,846	Brookman Cast Industries (Comp)	Salem, OR	09/12/2003	08/22/2003
52,847	MedSource Technologies (Wkrs)	Newton, MA	09/12/2003	08/26/2003
52,848	Snap-Tite (Wkrs)	Erie, PA	09/12/2003	08/29/2003
52,849	Renaissance Mark (GCU)	Baltimore, MD	09/12/2003	09/04/2003
52,850	Breed Technologies (Wkrs)	El Paso, TX	09/12/2003	09/28/2003
52,851	General Mills (Wkrs)	Eden Prairie, MN	09/12/2003	09/02/2003
52,852	Aurora Metals Division, LLC (Comp)	Montgomery, IL	09/12/2003	09/03/2003
52,853	Trenton Technology, Inc. (NY)	Utica, NY	09/12/2003	09/04/2003
52,854	U.S. Axle, Inc. (Comp)	Pottstown, PA	09/12/2003	09/26/2003
52,855	ON Semiconductor (Wkrs)	E. Greenwich, RI	09/12/2003	09/03/2003
52,856	Starbase Technologies, Inc. (Comp)	Pittsfield, MA	09/12/2003	09/28/2003

[FR Doc. 03–25704 Filed 10–9–03; 8:45 am]

BILLING CODE 4510–30–M

DEPARTMENT OF LABOR

Employment and Training Administration

Notice of Determinations Regarding Eligibility To Apply for Worker Adjustment Assistance

In accordance with Section 223 of the Trade Act of 1974, as amended, (19 U.S.C. 2273), the Department of Labor herein presents summaries of determinations regarding eligibility to apply for trade adjustment assistance for workers (TA–W) number and alternative trade adjustment assistance (ATAA) by (TA–W) number issued during the period of September 2003.

In order for an affirmative determination to be made and a certification of eligibility to apply for directly-impacted (primary) worker adjustment assistance to be issued, each of the group eligibility requirements of Section 222(a) of the Act must be met.

I. Section (a)(2)(A) all of the following must be satisfied:

A. A significant number or proportion of the workers in such workers' firm, or an appropriate subdivision of the firm, have become totally or partially separated, or are threatened to become totally or partially separated;

B. The sales or production, or both, of such firm or subdivision have decreased absolutely; and

C. Increased imports of articles like or directly competitive with articles produced by such firm or subdivision have contributed importantly to such workers' separation or threat of separation and to the decline in sales or production of such firm or subdivision; or

II. Section (a)(2)(B) both of the following must be satisfied:

A. A significant number or proportion of the workers in such workers' firm, or an appropriate subdivision of the firm, have become totally or partially separated, or are threatened to become totally or partially separated;

B. There has been a shift in production by such workers' firm or subdivision to a foreign country of articles like or directly competitive with articles which are produced by such firm or subdivision; and

C. One of the following must be satisfied:

1. The country to which the workers' firm has shifted production of the articles is a party to a free trade agreement with the United States;

2. The country to which the workers' firm has shifted production of the articles to a beneficiary country under the Andean Trade Preference Act, African Growth and Opportunity Act, or the Caribbean Basin Economic Recovery Act; or

3. There has been or is likely to be an increase in imports of articles that are like or directly competitive with articles which are or were produced by such firm or subdivision.

Also, in order for an affirmative determination to be made and a certification of eligibility to apply for worker adjustment assistance as an adversely affected secondary group to be issued, each of the group eligibility requirements of Section 222(b) of the Act must be met.

(1) Significant number or proportion of the workers in the workers' firm or an appropriate subdivision of the firm have become totally or partially separated, or are threatened to become totally or partially separated;

(2) The workers' firm (or subdivision) is a supplier or downstream producer to a firm (or subdivision) that employed a group of workers who received a certification of eligibility to apply for trade adjustment assistance benefits and such supply or production is related to the article that was the basis for such certification; and

(3) Either—

(A) The workers' firm is a supplier and the component parts it supplied for the firm (or subdivision) described in paragraph (2) accounted for at least 20 percent of the production or sales of the workers' firm; or

(B) A loss or business by the workers' firm with the firm (or subdivision) described in paragraph (2) contributed importantly to the workers' separation or threat of separation.

Negative Determinations for Worker Adjustment Assistance

In the following cases, the investigation revealed that the criteria for eligibility have not been met for the reasons specified.

The investigation revealed that criteria (a)(2)(A)(I.C.) (Increased imports) and (a)(2)(B)(II.B) (No shift in production to a foreign country) have not been met.

TA–W–52,665; Textron Fastening Systems, a wholly-owned subsidiary of Textron, Inc., PFPD Plant, Tooling Department, Rockford, IL

TA–W–52,489; Portola Packaging, Inc., U.S. Closure Div., Sumter, SC

TA–W–52,580; Irwin-Hodson Metal Manufacturing LLC, Portland, OR

TA–W–52,594; Squires Hardwoods, Inc., Shannon Div., Shannon, NC

TA–W–52,374; Ellwood City Forge, a div. of Ellwood of The Ellwood Group, Inc., Ellwood City, PA

TA–W–52,355; Honeywell International, Inc., Industry Solutions, Cupertino, CA

TA–W–52,394; Guilford Mills, Inc., Guilford East, Wallace, NC

TA–W–52,159; Milford Fabricating Co., Detroit, MI

TA–W–52,416; Jolly Gardener, Poland, ME

TA–W–52,576; Smith Meter, Inc., a/k/a/ FMV Technologies, Inc., Erie, PA

TA–W–52,758; Bear Garden Fisheries, Kodiak, AK

TA–W–52,761; Fishing Vessel (F/V) Leopard, Kenai, AK

The workers firm does not produce an article as required for certification under Section 222 of the Trade Act of 1974.

TA–W–52,598 & A; Minacs, Flint, MI & Swartz Creek, MI

TA–W–52,622; Descartes Systems (USA) LLC, an affiliate of The Descartes Systems Group, Inc., Atlanta, GA

TA–W–52,666; Preceed America, Inc., Hillsboro, OR

TA–W–52,670; Joy Mining Machinery, Abingdon, VA

TA–W–52,632; UAW–Daimler Chrysler Child Development Center, National Training Center, Huntsville, AL

TA–W–52,383; AG Communication Systems, Phoenix, AZ

TA–W–52,615; Underwriters Laboratories, Inc., Camas, WA

TA–W–52,660; C.J. USA Transport, Wayne, MI

TA–W–52,651; R.R. Donnelley & Sons Co., Lancaster Financial Printing Div., Lancaster, PA

TA–W–52,637; MSX International Engineering Services, Inc., a wholly-owned subsidiary of MSX International, Inc., Collaborative Engineering Management Services Div., Madison Heights, MI

TA–W–52,444; Luzenac America, Inc., a subsidiary of Rio Tinto, PLC, Centennial, CO

TA–W–52,451; Saurer, Inc., a/k/a Schlafhorst, Inc., Charlotte, NC

The investigation revealed that criterion (a)(2)(A)(I.A) (no employment decline) has not been met.

TA–W–52,725; Fishing Vessel (F/V) Bad Betty, Homer, AK

TA–W–52,697; Pryor Fish Camp, Kodiak, AK

TA–W–52,760; Fishing Vessel (F/V) Freedom, Mt. Vernon, WA

The investigation revealed that criteria (a)(2)(A)(I.C) (increased imports) and (a)(2)(B)(II.C) (has shifted production to a foreign country) have not been met.

TA–W–52,396; Phoenix Technologies, Ltd, Irvine, CA

The investigation revealed that criteria (a)(2)(A)(I.B) (Sales or production, or both, did not decline) and (a)(2)(B)(II.B) (has shifted production to a county not under the free trade agreement with U.S.) have not been met.

TA–W–52,550; Crane Valve North America, Washington, IA

TA–W–52,314; Presstek, Inc., Hudson, NH

TA–W–52,399A; Morelock Enterprises, Closures Div., including leased workers from Staffing Services, Bend, OR

The investigation revealed that criteria (2) has not been met. The workers firm (or subdivision) is not a supplier or downstream producer to trade-affected companies.

TA–W–52,353; Nevamar Co., LLC, Waverly, VA

TA–W–52,568; Day International, Textiles Div., Greenville, SC

TA–W–52,676; Defender Services, Inc., Working at Pillowtex Plant #1, Kannapolis, NC, A; Defender Services, Inc., Working at Pillowtex Plant #16, Salisbury, NC, B; Defender Services, Inc., Working at Pillowtex Plant #6, Concord, NC and C; Definder Services, Inc., Working at Pillowtex Corp., Eden, NC

Affirmative Determinations for Worker Adjustment Assistance

The following certifications have been issued; the date following the company name and location of each determination references the impact date for all workers of such determination.

The following certifications have been issued. The requirements of (a)(2)(A) (increased imports) of Section 222 have been met.

TA–W–52,530; Fluor Industrial Services, Inc., Maintenance and Industrial Services Div., Kannapolis, NC: August 11, 2002.

TA–W–52,463; Kannapolis Energy Partners, LLC, Kannapolis, NC: July 31, 2002.

TA–W–52,613; ITT Industries, Cannon Switch Products, including leased workers of Staffmark and Adecco, Loveland, CO: August 14, 2002.
TA–W–52,415; Todays Plastics, Bonneville, AR: July 29, 2002.
TA–W–52,418; Tyler Pipe Co., Utility Fittings Div., Tyler, TX: July 23, 2002.
TA–W–52,491; Tembec Woodsville, Inc., Woodsville, NH: August 6, 2002.
TA–W–52,176; Belmont Dyers Co., a div. of Meridian Dyed Yarn Group, Belmont, NC: June 4, 2002.
TA–W–52,467; Johnson and Johnson Would Management, a div. of Ethicon, Inc., including leased workers of Kelly Services, Sherman, TX: August 4, 2002.
TA–W–52,524; General Electric Appliances, a subsidiary of General Electric Co., Bloomington, IN: February 2, 2003.
TA–W–51,906; The Central Brass Manufacturing Co., Cleveland, OH: May 22, 2002.
TA–W–52,384 & A; Slater Screen Print Corp., Pawtucket, RI and Slater Dye Works, Inc., Pawtucket, RI: July 23, 2002.
TA–W–52,405; Matheson Tri-Gas, a wholly owned subsidiary of Nippon Sanso, Site Services Div., Employed at Sony Semiconductor, San Antonio, TX: July 24, 2002.
TA–W–52,417; Pennsylvania House, Inc., Lewisburg, PA: July 17, 2002.
TA–W–52,342; Citation, Browntown, WI: July 16, 2002.
TA–W–52,389; Master Carvers of Jamestown, Ltd, Jamestown, NY: July 16, 2002.
TA–W–52,409; Baxter Healthcare Corp., Bioscience, Rochester, MI: July 20, 2002.
TA–W–52,433; Design Engineering Management Co., Inc., including leased workers of Experience Works Staffing Service, Temp Associates, Inc., and CSI Employment Services, New London, IA: July 17, 2002.
TA–W–52,399; Morelock Enterprises, Components Div., including leased workers from Staffing Services, Bend, OR: July 24, 2002.
TA–W–52,626; Paper Converting Machine Co., Green Bay, WI: August 14, 2002.
TA–W–52,180; Stencil Aire, LLC, Laster Excel Div., Green Lake, WI: June 27, 2002.
TA–W–52,388; R.P. Adams Co., Inc., Buffalo, NY: May 14, 2002.
TA–W–52,404; Curtis Specialty Papers, Port Huron Mill, Port Huron, MI: July 24, 2002.
TA–W–52,414; Actco Tool and Manufacturing Co., Meadville, PA: July 17, 2002.
TA–W–52,466; USR Optonix, Inc., Phosphor Div., Hackettstown, NJ: January 6, 2003.
TA–W–51,720; Kidder, Inc., Agawam, MA: April 22, 2002.
TA–W–52,559; Pillowtex Corp., Bed and Bath Div., including leased workers of Corestaff Agency, Rakes Staffing, A & R Agency and Ajilon Staffing, Kannapolis, NC: August 15, 2003.
TA–W–52,680; Vaughan Furniture Co., Inc., Empire Plant, Johnson City, TN: August 21, 2002.
TA–W–52,737; Triquint Optoelectronics, Inc., Breinigsville, PA: August 18, 2002.
TA–W–52,476; Fieldcrest Cannon, Inc., a subsidiary of Pillowtex Corp., Bath Div. including leased workers of Corestaff Agency, Fieldale, VA: August 6, 2002.
TA–W–52,477; Fieldcrest Cannon, Inc., a subsidiary of Pillowtex Corp., Bed Div., Decorative Bedding, including leased workers of A & R Staffing, Eden, NC.
TA–W–52,478; Fieldcrest Cannon, Inc., a subsidiary of Pollowtex Corp., Bed Div., Plant 16, China Grove, NC: August 6, 2002.
TA–W–52,479; Fieldcrest Cannon, Inc., a subsidiary of Pillowtex Corp., Bed Div., Plant 11, including leased workers of Corestaff Agency, Rockwell, NC: August 6, 2002.
TA–W–52,480; Fieldcrest Cannon, Inc., a subsidiary of Pillowtex Corp., Bed Div., Plant 6, including leased workers of Corestaff Agency, Conford, NC: August 6, 2002.
TA–W–52,481; Fieldcrest Cannon, Inc., a subsidiary of Pillowtex Corp., Bed Div., FC Finishing, Union, SC: August 6, 2002.
TA–W–52,482; Fieldcrest Cannon, Inc, a subsidiary of Pillowtex Corp., Bath Div Warehouse, Mauldin, SC: August 6, 2002.
TA–W–52,483; Pillowtex Corp., Pillow and Pad Div., Dallas, TX: August 6, 2002.
TA–W–52,484; Pillowtex Corp., Pillow and Pad Div., Chicago, IL: August 6, 2002.
TA–W–52,485; Pillowtex Corp., Pillow and Pad Div., Hanover, PA: August 6, 2002.
TA–W–52,486; Pillowtex Corp., Pillow and Pad Div., Los Angeles, CA: August 6, 2002.
TA–W–52,487; Pillowtex Corp., Pillow and Pad Div., Tunica, MS: August 6, 2002.
TA–W–52,475; Fieldcrest Cannon, Inc., a subsidiary of Pillowtex Corp., Bath Div., including leased workers of Corestaff Agency, Scottsboro, AL: August 6, 2002.
TA–W–52,679; GN Netcom, Inc., Nashua, NH: August 25, 2002.
TA–W–52,535; Admanco, Inc., Ripon, WI: August 11, 2002.
TA–W–52,524; Viceroy Gold Corp., Castle Mountain Mine, a subsidiary of Quest Capital Corp., Ivanpah, CA: August 8, 2003.
TA–W–52,498; Smart Modular Technologies, (MA), Inc. a wholly owned subsidiary of Solectron Crop., Technology Solutions Business Unit Div., Wilmington, MS: August 7, 2002.
TA–W–52,492; Buckeye Lumberton, Inc., Lumberton, NC: August 6, 2002.
TA–W–52,488; McKenzie Forest Products, LLC, Myrtle Point, OR: August 6, 2002.

The following certifications have been issued. The requirements of (a) (2) (B) (shift in production) of Section 222 have been met.

TA–W–52,460; Alice Manufacturing Co., Inc., Arial Plant. Div., Easley, SC: August 1, 2002.
TA–W–52,599; Ruppe Hosiery, Inc., Kings Mountain, NC:. August 7, 2002.
TA–W–52,446; Graphite Design International, Inc., San Diego, CA: July 22, 2002.
TA–W–52,527; MOCAP, Inc., Farmington, MO: August 6, 2002.
TA–W–52,385; Derby Fabricating LLC, Galesburg Plant, wholly owned by Raymond Loyd, Galesburg, IL: July 23, 2002.
TA–W–52,453; National Metal Abrasives, Inc., Wadsworth, OH: July 30, 2002.
TA–W–52,529; Marshall Gas Controls, a div. of S.H. Leggitt Co., San Marcos, TX: July 31, 2002.
TA–W–52,551; Mueller Gas Products/ Lincoln Brass Works, Waynesboro, TN: August 12, 2002.
TA–W–52,369; Hopper Radio of Florida, Weston, FL: July 10, 2002.
TA–W–52,392; Chromalox, Inc., formerly known as Wiegand Industrial, a div. of J.P. Morgan Partners, LLC,. Ogden, UT: July 23, 2002.
TA–W–52,429; Agilent Technologies, Asics Product Div. (APD), Fort Collins, CO: July 21, 2002.
TA–W–52,571; The Dean Co., Princeton, WV: July 30, 2002.
TA–W–52,542; Columbus Industries, Inc., Asheville, OH: August 11, 2002.
TA–W–52,742; Fishercast, Inc., a div. of Fisher Gauge Ltd, Watertown, NY: August 17, 2002
TA–W–52,763; Philadelphia Chewing Gum Corp., Havertown, PA: August 22, 2002.
TA–W–52,503; Carolina Mills, Inc., Plant #2, Newton, NC: August 7, 2002.

TA–W–52,678; Cooper Industries, Crouse-Hinds Div. formerly known as Myers Hubs, Montebello, CA: August 15, 2002.
TA–W–52,687; Renfro Corp., Pulaski Plant, Pulaski, VA: August 16, 2002.
TA–W–52,739; Springs Industries, Inc., Baby Products Div., Gainesville, GA: August 26, 2002.
TA–W–52,634; Monona Wire Corp., Dodge Facility, Dekalb, IL: August 20, 2002.
TA–W–52,570; Depuy Orthopedics, Inc., Albuquerque, NM: August 13, 2002.
TA–W–52,558; Edison Fashion, Inc., Bronx, NY: August 11, 2002.
TA–W–52,544; Alstom Power, Inc., Heat Exchange Div., Easton, PA: August 11, 2002.
TA–W–52,608; Fruit of The Loom Texas, Inc., Harlingen, TX: August 11, 2002.
TA–W–52,473; Maytag Corp., Maytag Appliance Div., Galesburg Refrigeration Products, Galesburg, IL: August 6, 2002

The following certification has been issued. The requirement of upstream supplier to a trade certified primary firm has been met.

TA–W–52,549; Broadway and Son Electric, Inc., Workers Employed at Pillowtex Corp., Kannapolis, NC: August 11, 2002.

Negative Determinations for Alternative Trade Adjustment Assistance

In order for the Division of Trade Adjustment Assistance to issued a certification of eligibility to apply for Alternative Trade Adjustment Assistance (ATAA) for older workers, the group eligibility requirements of Section 246(a)(3)(A)(ii) of the Trade Act must be met.

In the following cases, it has been determined that the requirements of Section 246(a)(3)(ii) have not been met for the reasons specified.

Since the workers are denied eligibility to apply for TAA, the workers cannot be certified eligible for ATAA.

TA–W–52,598 & A; Minacs, Flint, MI and Swartz Creek, MI
TA–W–52,665; Textron Fastening Systems, a wholly-owned subsidiary of Textron, Inc., PFPD Plant, Tooling Department, Rockford, IL
TA–W–52,622; Descartes Systems (USA) LLC, an affiliate of The Descartes Systems Group, Inc., Atlanta, GA
TA–W–52,489; Portola Packaging, Inc., U.S. Closure Div., Sumter, SC
TA–W–52,542; Columbus Industries, Inc., Asheville, OH
TA–W–52,580; Irwin-Hodson Metal Manufacturing LLC, Portland, OR
TA–W–52,666; Preceed America, Inc., Hillsboro, OR
TA–W–52,670; Joy Mining Machinery, Abingdon, VA
TA–W–52,594; Squires Hardwoods, Inc., Shannon Div., Shannon, NC

Affirmative Determinations for Alternative Trade Adjustment Assistance

In order for the Division of Trade Adjustment Assistance to issue a certification of eligibility to apply for Alternative Trade Adjustment Assistance (ATAA) for older workers, the group eligibility requirements of Section 246(a)(3)(A)(ii) of the Trade Act must be met.

The following certifications have been issued; the date following the company name and location of each determination references the impact date for all workers of such determinations.

In the following cases, it has been determined that the requirements of Section 246(a)(3)(ii) have been met.

I. Whether a significant number of workers in the workers' firm are 50 years of age or older.

II. Whether the workers in the workers' firm possess skills that are not easily transferable.

III. The competitive conditions within the workers' industry (*i.e.*, conditions within the industry are adverse).

TA–W–52,742; Fishercast, Inc., a div. of Fisher Gauge Ltd, Watertown, NY: August 17, 2002
TA–W–52,763; Philadelphia Chewing Gum Corp., Havertown, PA: August 22, 2002.
TA–W–52,503; Carolina Mills, Inc., Plant #2, Newton, NC: August 7, 2002.
TA–W–52,678; Cooper Industries, Crouse-Hinds Div. formerly known as Myers Hubs, Montebello, CA: August 15, 2002.
TA–W–52,687; Renfro Corp., Pulaski Plant, Pulaski, VA: August 16, 2002.
TA–W–52,739; Springs Industries, Inc., Baby Products Div., Gainesville, GA: August 26, 2002.
TA–W–52,634; Monona Wire Corp., Dodge Facility, Dekalb, IL: August 20, 2002.
TA–W–52,570; Depuy Orthopedics, Inc., Albuquerque, NM: August 13, 2002.
TA–W–52,558; Edison Fashion, Inc., Bronx, NY: August 11, 2002.
TA–W–52,544; Alstom Power, Inc., Heat Exchange Div., Easton, PA: August 11, 2002.
TA–W–52,608; Fruit of The Loom Texas, Inc., Harlingen, TX: August 11, 2002.
TA–W–52,473; Maytag Corp., Maytag Appliance Div., Galesburg Refrigeration Products, Galesburg, IL: August 6, 2002.
TA–W–52,559; Pillowtex Corp., Bed and Bath Div., including leased workers of Corestaff Agency, Rakes Staffing, A & R Agency and Ajilon Staffing, Kannapolis, NC: August 15, 2003
TA–W–52,680; Vaughan Furniture Co., Inc., Empire Plant, Johnson City, TN: August 21, 2002.
TA–W–52,737; Triquint Optoelectronics, Inc., Breinigsville, PA: August 18, 2002.
TA–W–52,476; Fieldcrest Cannon, Inc., a subsidiary of Pillowtex Corp., Bath Div. including leased workers of Corestaff Agency, Fieldale, VA: August 6, 2002.
TA–W–52,477; Fieldcrest Cannon, Inc., a subsidiary of Pillowtex Corp., Bed Div., Decorative Bedding, including leased workers of A & R Staffing, Eden, NC
TA–W–52,478; Fieldcrest Cannon, Inc., a subsidiary of Pollowtex Corp., Bed Div., Plant 16, China Grove, NC: August 6, 2002.
TA–W–52,479; Fieldcrest Cannon, Inc., a subsidiary of Pillowtex Corp., Bed Div., Plant 11, including leased workers of Corestaff Agency, Rockwell, NC: August 6, 2002.
TA–W–52,480; Fieldcrest Cannon, Inc., a subsidiary of Pillowtex Corp., Bed Div., Plant 6, including leased workers of Corestaff Agency, Concord, NC: August 6, 2002.
TA–W–52,481; Fieldcrest Cannon, Inc., a subsidiary of Pillowtex Corp., Bed Div., FC Finishing, Union, SC: August 6, 2002.
TA–W–52,482; Fieldcrest Cannon, Inc., a subsidiary of Pillowtex Corp., Bath Div Warehouse, Mauldin, SC: August 6, 2002.
TA–W–52,483; Pillowtex Corp., Pillow and Pad Div., Dallas, TX: August 6, 2002.
TA–W–52,484; Pillowtex Corp., Pillow and Pad Div., Chicago, IL: August 6, 2002.
TA–W–52,485; Pillowtex Corp., Pillow and Pad Div., Hanover, PA: August 6, 2002.
TA–W–52,486; Pillowtex Corp., Pillow and Pad Div., Los Angeles, CA: August 6, 2002.
TA–W–52,487; Pillowtex Corp., Pillow and Pad Div., Tunica, MS: August 6, 2002.
TA–W–52,475; Fieldcrest Cannon, Inc., a subsidiary of Pillowtex Corp., Bath Div., including leased workers of Corestaff Agency, Scottsboro, AL: August 6, 2002.
TA–W–52,679; GN Netcom, Inc., Nashua, NH: August 25, 2002.
TA–W–52,535; Admanco, Inc., Ripon, WI: August 11, 2002.
TA–W–52,524; Viceroy Gold Corp., Castle Mountain Mine, a subsidiary

of Quest Capital Corp., Ivanpah, CA: August 8, 2003.

TA–W–52,498; Smart Modular Technologies, (MA), Inc. a wholly owned subsidiary of Solectron Crop., Technology Solutions Business Unit Div., Wilmington, MS: August 7, 2002.

TA–W–52,492; Buckeye Lumberton, Inc., Lumberton, NC: August 6, 2002.

TA–W–52,488; McKenzie Forest Products, LLC, Myrtle Point, OR: August 6, 2002.

I hereby certify that the aforementioned determinations were issued during the months of September. Copies of these determinations are available for inspection in Room C–5311, U.S. Department of Labor, 200 Constitution Avenue, NW., Washington, DC 20210 during normal business hours or will be mailed to persons who write to the above address.

Dated: September 18, 2003.

Timothy Sullivan,

Director, Division of Trade Adjustment Assistance.

[FR Doc. 03–25722 Filed 10–9–03; 8:45 am]

BILLING CODE 4510–30–P

DEPARTMENT OF LABOR

Employment and Training Administration

[TA–W–52,638]

Vesuvius USA, Champaign Machine Shop, Champaign, Illinois; Notice of Termination of Investigation

Pursuant to Section 221 of the Trade Act of 1974, as amended, an investigation was initiated on August 21, 2003 in response to a worker petition filed by the company on behalf of workers at Vesuvius USA, Champaign Machine Shop, Champaign, Illinois.

The petitioner has requested that the petition be withdrawn. Consequently, the investigation has been terminated.

Signed at Washington, DC this 9th day of September, 2003.

Richard Church,

Certifying Officer, Division of Trade Adjustment Assistance.

[FR Doc. 03–25734 Filed 10–9–03; 8:45 am]

BILLING CODE 4510–30–P

DEPARTMENT OF LABOR

Employment and Training Administration

[TA–W–52,723]

W-Phone, Inc., Highlands Ranch, CO; Notice of Termination of Investigation

Pursuant to Section 221 of the Trade Act of 1974, an investigation was initiated on September 2, 2003 in response to a worker petition which was filed on behalf of workers at W-Phone, Inc., Highlands Ranch, Colorado.

All workers were separated from the subject firm more than one year before the date of the petition. Section 223(b) of the Act specifies that no certification may apply to any worker whose last separation occurred more than one year before the date of the petition. Consequently, further investigation in this case would serve no purpose, and the investigation has been terminated.

Signed in Washington, DC, this 8th day of September 2003.

Richard Church,

Certifying Officer, Division of Trade Adjustment Assistance.

[FR Doc. 03–25728 Filed 10–9–03; 8:45 am]

BILLING CODE 4510–30–P

DEPARTMENT OF LABOR

Employment and Training Administration

[TA–W–51,455A and TA–W–51,455C]

White Rodgers, Coils Division, A Division of Emerson, Harrison, Arkansas; and White Rodgers, Air Cleaners Division, A Division of Emerson, Harrison, Arkansas; Notice of Negative Determination Regarding Application for Reconsideration

By application of June 19, 2003, a company official requested administrative reconsideration of the Department's negative determination regarding eligibility for workers and former workers of the subject firm to apply for Trade Adjustment Assistance (TAA). The denial notice was signed on June 4, 2003 and published in the **Federal Register** on April 24, 2003 (68 FR 36847).

Pursuant to 29 CFR 90.18(c) reconsideration may be granted under the following circumstances:

(1) If it appears on the basis of facts not previously considered that the determination complained of was erroneous;

(2) If it appears that the determination complained of was based on a mistake in the determination of facts not previously considered; or

(3) If in the opinion of the Certifying Officer, a mis-interpretation of facts or of the law justified reconsideration of the decision.

The TAA petition, filed on behalf of workers at White Rodgers, Coils Division, a division of Emerson, Harrison, Arkansas (TA–W–51,455A) engaged in the production of coils, and on behalf of workers at White Rodgers, Air Cleaner Division, a division of Emerson, Harrison, Arkansas (TA–W–51,455C) were denied because the ''contributed importantly'' group eligibility requirement of Section 222(3) of the Trade Act of 1974 was not met and production was not shifted abroad.

The company official who filed the reconsideration request stated that, in regard to the Coils Division, production at the subject division was dependent on other divisions being adjacent; once production phases that preceded coil production (injection molding used to wind coils), and followed coil production (gas valves that incorporated the coils) were shifted from the subject division site, it became necessary to move the coil production to another domestic location. As a result, the official contends, the coil production was impacted by a shift of production to Mexico.

Contact with another company official confirmed what had been established in the initial investigation, which was that production at the Coils Division shifted exclusively to a domestic site. It was also revealed that, although competitive production does occur at an affiliate in Mexico, there was no evidence of a shift from the subject facility to the Mexican affiliate or any U.S. imports resulting from this or any other foreign production.

The company official who filed the reconsideration request also stated that, in regard to the Air Cleaner Division, (TA–W–51–455C) production had been shifted to Mexico in June of 2003.

Follow up contact with the company revealed that the majority of production was shifted from the Air Cleaner Division in Harrison, Arkansas to Mexico. However, the shift began outside of the relevant period of this investigation. The petitioners are thus encouraged to file a new petition on behalf of workers at the Air Cleaner Division, thereby creating a relevant period of investigation that would include changing conditions.

Conclusion

After review of the application and investigative findings, I conclude that there has been no error or

misinterpretation of the law or of the facts which would justify reconsideration of the Department of Labor's prior decision. Accordingly, the application is denied.

Signed at Washington, DC, this 22nd day of September, 2003.

Linda G. Poole,

Certifying Officer, Division of Trade Adjustment Assistance.

[FR Doc. 03–25713 Filed 10–9–03; 8:45 am]

BILLING CODE 4510–30–P

DEPARTMENT OF LABOR

Employment and Training Administration

[TA–W–52,504]

Wirco Castings, Inc., New Athens, Illinois; Notice of Termination of Investigation

Pursuant to section 221 of the Trade Act of 1974, as amended, an investigation was initiated on August 11, 2003, in response to a petition filed on behalf of workers at Wirco Castings, Inc., New Athens, Illinois.

The petitioner has requested that the petition be withdrawn. Consequently, the investigation has been terminated.

Signed at Washington, DC, this 9th day of September, 2003.

Richard Church,

Certifying Officer, Division of Trade Adjustment Assistance.

[FR Doc. 03–25725 Filed 10–9–03; 8:45 am]

BILLING CODE 4510–30–P

DEPARTMENT OF LABOR

Employment Standards Administration; Wage and Hour Division

Minimum Wages for Federal and Federally Assisted Construction; General Wage Determination Decisions

General wage determination decisions of the Secretary of Labor are issued in accordance with applicable law and are based on the information obtained by the Department of Labor from its study of local wage conditions and data made available from other sources. They specify the basic hourly wage rates and fringe benefits which are determined to be prevailing for the described classes of laborers and mechanics employed on construction projects of a similar character and in the localities specified therein.

The determination in these decisions of prevailing rates and fringe benefits have been made in accordance with 29 CFR part 1, by authority of the Secretary of Labor pursuant to the provisions of the Davis-Bacon Act of March 3, 1931, as amended (46 Stat. 1494, as amended, 40 U.S.C. 276a) and of other Federal statutes referred to in 29 CFR part 1, appendix, as well as such additional statutes as may from time to time be enacted containing provisions for the payment of wages determined to be prevailing by the Secretary of Labor in accordance with the Davis-Bacon Act. The prevailing rates and fringe benefits determined in these decisions shall, in accordance with the provisions of the foregoing statutes, constitute the minimum wages payable on Federal and federally assisted construction projects to laborers and mechanics of the specified classes engaged on contract work of the character and in the localities described therein.

Good cause is hereby found or not utilizing notice and public comment procedure thereon period to the issuance of these determinations as prescribed in 5 U.S.C. 553 and not providing for delay in the effective date as prescribed in that section, because the necessity to issue current construction industry wage determinations frequently and in large volume causes procedures to be impractical and contrary to the public interest.

General wage determination decisions, and modifications and supersedes decisions thereto, contain no expiration dates and are effective from their date of notice in the **Federal Register**, or on the date written notice is received by the agency, whichever is earlier. These decisions are to be used in accordance with the provisions of 29 CFR parts 1 and 5. Accordingly, the applicable decision, together with any modifications issued, must be made a part of every contract for performance of the described work within the geographic area indicated as required by an applicable Federal prevailing wage law and 29 CFR part 5. The wage rates and fringe benefits, notice of which is published herein, and which are contained in the Government Printing Office (GPO) document entitled ''General Wage Determinations Issued Under The Davis-Bacon And Related Acts,'' shall be the minimum paid by contractors and subcontractors to laborers and mechanics.

Any person, organization, or governmental agency having an interest in the rates determined as prevailing is encouraged to submit wage rate and fringe benefit information for consideration by the Department.

Further information and self-explanatory forms for the purpose of submitting this data may be obtained by writing to the U.S. Department of Labor, Employment Standards Administration, Wage and Hour Division, Division of Wage Determinations, 200 Constitution Avenue, NW., Room S–3014, Washington, DC 20210.

Modification to General Wage Determination Decisions

The number of the decisions listed to the Government Printing Office document entitled ''General Wage Determinations Issued Under the Davis-Bacon and related Acts'' being modified are listed by Volume and State. Dates of publication in the **Federal Register** are in parentheses following the decisions being modified.

Volume I

Maine
MEI030001 (Jun. 13, 2003)
MEI030002 (Jun. 13, 2003)
MEI030005 (Jun. 13, 2003)

Volume II

None

Volume III

None

Volume IV

None

Volume V

None

Volume VI

North Dakota
ND030003 (Jun. 13, 2003)
ND030004 (Jun. 13, 2003)

Volume VII

None

General Wage Determination Publication

General wage determinations issued under the Davis-Bacon and related Acts, including those noted above, may be found in the Government Printing Office (GPO) document entitled ''General Wage Determinations Issued Under the Davis-Bacon And Related Acts''. This publication is available at each of the 50 Regional Government Depository Libraries and many of the 1,400 Government Depository Libraries across the country.

General wage determinations issued under the Davis-Bacon and related Acts are available electronically at no cost on the Government Printing Office site at *http:www.access.gpo.gov/davisbacon.* They are also available electronically by subscription to the Davis-Bacon Online Service (*http://davisbacon.fedworld.gov*) of the National Technical Information Service (NTIS) of the U.S. Department of Commerce at 1–800–363–2068. This

subscription offers value-added features such as electronic delivery of modified wage decisions directly to the user's desktop, the ability to access prior wage decisions issued during the year, extensive Help desk Support, etc.

Hard-copy subscriptions may be purchased from: Superintendent of Documents, U.S. Government Printing Office, Washington, DC 20402, (202) 512–1800.

When ordering hard-copy subscription(s), be sure to specify the State(s) of interest, since subscriptions may be ordered for any or all of the six separate Volumes, arranged by State. Subscriptions include an annual edition (issued in January or February) which includes all current general wage determinations for the States covered by each volume. Throughout the remainder of the year, regular weekly updates will be distributed to subscribers.

Signed at Washington, DC this 2nd day of October, 2003.

Carl J. Poleskey,

Chief, Branch of Construction Wage Determinations.

[FR Doc. 03–25378 Filed 10–9–03; 8:45 am]

BILLING CODE 4510–27–M

DEPARTMENT OF LABOR

Occupational Safety and Health Administration

Agency Information Collection Activities; Announcement of Office of Management and Budget (OMB) Control Numbers Under the Paperwork Reduction Act

AGENCY: Occupational Safety and Health Administration (OSHA), Labor.

ACTION: Notice, Announcement of OMB approval of information collection requirements.

SUMMARY: The Occupational Safety and Health Administration (OSHA) announces that the Office of Management and Budget (OMB) has extended its approval for a number of information collection requirements found in certain sections of 29 CFR parts 1910 and 1915. OSHA sought approval under the Paperwork Reduction Act of 1995 (PRA–95), and, as required by that Act, is announcing the approval numbers and expiration dates for those requirements.

EFFECTIVE DATES: This notice is effective October 10, 2003.

FOR FURTHER INFORMATION CONTACT: Todd Owen or Theda Kenney, Directorate of Standards and Guidance, Occupational Safety and Health Administration, U.S. Department of Labor, Room N–3609, 200 Constitution Avenue, NW., Washington, DC 20210, telephone (202) 693–2222.

SUPPLEMENTARY INFORMATION: In a series of **Federal Register** notices, the Agency announced its request to OMB to renew its current extensions of approval for various information collection (paperwork) requirements in its safety and health standards for General Industry and Shipyard Employment. In these **Federal Register** announcements, the Agency provided 60-day comment periods for the public to respond to OSHA's burden hour and cost estimates.

In accordance with PRA–95 (44 U.S.C. 3501–3520), OMB renewed its approval for these information collection requirements and assigned OMB control numbers to these requirements. The table below provides the following information for each of these OMB-approved requirements: The title of the collection; the date of the **Federal Register** notice; the **Federal Register** Reference (date, volume, and leading page); OMB;s control number; and the new expiration date.

Title	Date of Federal Register publication, Federal Register reference, and OSHA docket number	OMB control No.	Expiration date
Presence Sensing Device Initiation (PSDI) (29 CFR 1910.217(h).	1/22/2003, 68 FR 3038, Docket No. 1218–0143(2003)	1218–0143	05/31/2004
1,3-Butadiene (29 CFR 1910.1051)	03/11/2003, 68 FR 11592 Docket No. 1218–0170(2003).	1218–0170	07/31/2006
Benzene, (29 CFR 1910.1028)	03/20/2003, 68 FR 13732 Docket No. 1218–0129(2003).	1218–0129	07/31/2006
Personal Protective Equipment (PPE) for Shipyard Employment (29 CFR part 1915, Subpart I).	03/24/2003, 68 FR 14260 Docket No. 1218–0215(2003).	1218–0215	07/31/2006
Personal Protective Equipment (PPE) for General Industry (29 CFR part 1910, Subpart I).	03/24/2003 68 FR 14262 Docket No. 1218–0205(2003).	1218–0205	08/31/2006
Reports of Injuries to Employees Operation Mechanical Power Presses (29 CFR 1910.217(g)).	03/31/2003, 68 FR 15484 Docket No. 1218–0070(2003).	1218–0070	07/31/2006

In accordance with 5 CFR 1320.5(b), an agency cannot conduct, sponsor, or require a response to a collection of information unless: The collection displays a valid OMB control number; and the Agency informs respondents that they are not required to respond to the collection of information unless it displays a currently valid OMB control number.

Authority and Signature

John L. Henshaw, Assistant Secretary of Labor for Occupational Safety and Health, directed the preparation of this notice. The authority for this notice is the Paperwork Reduction Act of 1995 (44 U.S.C. 3506), and Secretary of Labor's Order No. 5–2002 (67 FR 65008).

Signed at Washington, DC on October 7th, 2003

John L. Henshaw,

Assistant Secretary of Labor.

[FR Doc. 03–25780 Filed 10–9–03; 8:45 am]

BILLING CODE 4510–26–M

NATIONAL AERONAUTICS AND SPACE ADMINISTRATION

[Notice (03–128)]

NASA Advisory Council, Biological and Physical Research Advisory Committee Meeting

AGENCY: National Aeronautics and Space Administration.

ACTION: Notice of meeting.

SUMMARY: In accordance with the Federal Advisory Committee Act, Public Law 92–463, as amended, the National Aeronautics and Space Administration announces a meeting of the NASA Advisory Council, Biological and Physical Research Advisory Committee.

DATES: Thursday, October 23, 2003, from 10 a.m. until 6 p.m. and Friday, October 24, 2003 from 8 a.m. until 12 Noon.

ADDRESSES: NASA Headquarters, 300 E Street SW., Room 6H46, Washington, DC 20546.

FOR FURTHER INFORMATION CONTACT: Dr. Bradley Carpenter, Code UG, National Aeronautics and Space Administration, Washington, DC 20546, 202/358–0826.

SUPPLEMENTARY INFORMATION: The meeting will be open to the public up to the seating capability of the meeting room. Attendees will be requested to sign a register and to comply with NASA security requirements, including the presentation of a valid picture ID, before receiving an access badge. Foreign nationals attending this meeting will be required to provide the following information: Full name; gender; date/place of birth; citizenship; visa/greencard information (number, type, expiration date); employer/affiliation information (name of institution, address, country, phone); title/position of attendee. Foreign nationals will be escorted at all times. To expedite admittance, attendees can provide identifying information in advance by contacting Dr. Bradley Carpenter at 202/358–0826 or via e-mail at *bcarpent@hq.nasa.gov.*

The agenda for the meeting is as follows:

—Review Recommendations
—Program Overview
—Division Reports
—International Space Station Research Status
—Strategic Plan

It is imperative that the meeting be held on this date to accommodate the scheduling priorities of the key participants. Visitors will be requested to sign a visitor's register.

June W. Edwards,

Advisory Committee Management Officer, National Aeronautics and Space Administration.

[FR Doc. 03–25828 Filed 10–9–03; 8:45 am]

BILLING CODE 7510–01–P

NATIONAL AERONAUTICS AND SPACE ADMINISTRATION

[Notice (03–129)]

NASA Space Science Advisory Committee, Astronomical Search for Origins and Planetary Systems Subcommittee; Meeting

AGENCY: National Aeronautics and Space Administration.

ACTION: Notice of meeting.

SUMMARY: The National Aeronautics and Space Administration announces a meeting of the NASA Space Science Advisory Committee (SScAC), Astronomical Search for Origins and Planetary Systems Subcommittee (OS).

DATES: Thursday, October 23, 2003, 8:30 a.m. to 5:30 p.m.; and Friday, October 24, 2003, 8:30 a.m. to 3 p.m.

ADDRESSES: Inn and Conference Center, University of Maryland, 3501 University Boulevard East, Adelphi, Maryland 20783.

FOR FURTHER INFORMATION CONTACT: Dr. Hashima Hasan, Code SZ, National Aeronautics and Space Administration, Washington, DC 20546, 202/395–0710, *hhasan@hq.nasa.gov.*

SUPPLEMENTARY INFORMATION: The meeting will be open to the public up to the seating capacity of the room. The agenda for the meeting is as follows:

—Report by Astronomy and Physics Director
—NASA's response to the Bahcall Report on Hubble Space Telescope-James Webb Space Telescope Transition
—Report by Astronomical Search for Origins and Planetary Theme Scientist
—Mission Updates: James Webb Space Telescope, Terrestrial Planet Finder

It is imperative that the meeting be held on these dates to accommodate the scheduling priorities of the key participants. Visitors will be requested to sign a visitor's register.

June W. Edwards,

Advisory Committee Management Officer, National Aeronautics and Space Administration.

[FR Doc. 03–25829 Filed 10–9–03; 8:45 am]

BILLING CODE 7510–01–P

NATIONAL AERONAUTICS AND SPACE ADMINISTRATION

[Notice (03–130)]

NASA Space Science Advisory Committee, Structure and Evolution of the Universe Subcommittee; Meeting

AGENCY: National Aeronautics and Space Administration.

ACTION: Notice of meeting.

SUMMARY: The National Aeronautics and Space Administration announces a meeting of the NASA Space Science Advisory Committee (SScAC), Structure and Evolution of the Universe Subcommittee (SEUS).

DATES: Thursday, October 23, 2003, 8:30 a.m. to 5:30 p.m.; and Friday, October 24, 2003, 8:30 a.m. to 3 p.m.

ADDRESSES: Inn and Conference Center, University of Maryland, 3501 University Boulevard East, Adelphi, Maryland 20783.

FOR FURTHER INFORMATION CONTACT: Dr. Paul Hertz, Code SZ, National Aeronautics and Space Administration, Washington, DC 20546, 202/358–0986, *paul.hertz@nasa.gov.*

SUPPLEMENTARY INFORMATION: The meeting will be open to the public up to the seating capacity of the room. The agenda for the meeting is as follows:

—Report by Astronomy and Physics Director
—Report by SEU Theme Scientist
—Report of Astronomy and Physics Working Group
—NASA's response to the Bahcall Report on HST–JWST Transition
—Updates on LISA and Con–X

It is imperative that the meeting be held on these dates to accommodate the scheduling priorities of the key participants. Visitors will be requested to sign a visitor's register.

June W. Edwards,

Advisory Committee Management Officer, National Aeronautics and Space Administration.

[FR Doc. 03–25830 Filed 10–9–03; 8:45 am]

BILLING CODE 7510–01–P

NATIONAL COMMUNICATIONS SYSTEM

Telecommunications Service Priority System Oversight Committee; Meeting

AGENCY: National Communications System (NCS).

ACTION: Notice of meeting.

A meeting of the Telecommunications Service Priority (TSP) System Oversight Committee will convene Thursday, November 13, 2002 from 9 a.m. to 12 p.m. the meeting will be held at 701 South Courthouse Road, Arlington, VA in the NCS conference room on the 2nd floor.

—TSP Program Update
—TSP Revalidation Update
—TSP Customer Satisfaction Survey

Anyone interested in attending or presenting additional information to the Committee, please contact Deborah Bea, Office of Priority Telecommunications, (703) 607–4933. Media or Press must contact Mr. Steve Barrett at (703) 607–6211.

Peter M. Fonash,

Federal Register Liaison Officer, National Communications System.

[FR Doc. 03–25762 Filed 10–9–03; 8:45 am]

BILLING CODE 5001–08–M

NUCLEAR REGULATORY COMMISSION

[Docket No. 72–26]

Pacific Gas and Electric Company; Issuance of Environmental Assessment and Finding of No Significant Impact Regarding a Proposed Exemption

The U.S. Nuclear Regulatory Commission (NRC or the Commission) is considering issuance of an exemption, pursuant to 10 CFR 72.7, from the provisions of 10 CFR 72.72(d) to Pacific Gas and Electric Company (PG&E or applicant). The requested exemption would allow PG&E to maintain a single set of spent fuel, high-level radioactive waste, and reactor-related Greater than Class C (GTCC) waste records in accordance with the requirements of its NRC-approved Quality Assurance program, which satisfies the criteria of 10 CFR part 50, appendix B, for the Independent Spent Fuel Storage Installation (ISFSI) at the Diablo Canyon Power Plant (DCPP) in San Luis Obispo County, California.

Environmental Assessment (EA)

Identification of Proposed Action: In its application for an ISFSI license, submitted on December 21, 2001, PG&E requested an exemption from the requirement in 10 CFR 72.72(d); which states in part that, ''Records of spent fuel, high-level radioactive waste, and reactor-related GTCC waste containing special nuclear material meeting the requirements in paragraph (a) of this section must be kept in duplicate. The duplicate set of records must be kept at a separate location sufficiently remote from the original records that a single event would not destroy both sets of records.''

The proposed action before the Commission is whether to grant this exemption pursuant to 10 CFR 72.7.

Need for the Proposed Action: The applicant stated that ISFSI spent-fuel, high-level radioactive waste, and reactor-related GTCC waste records will be maintained in a manner consistent with the records of the DCPP, which are stored in accordance with the NRC-approved Quality Assurance (QA) program. The approved QA program for the DCPP complies with the requirements established in 10 CFR part 50, appendix B, which incorporates by reference the specific recordkeeping requirements in 10 CFR 50.71(d)(1). PG&E did not request exemption from the records retention period requirements of 10 CFR 72.72(d). The applicant seeks to provide consistency in recordkeeping practices for the records related to the proposed DCPP ISFSI and those records currently maintained under the DCPP QA program. The exemption would also preclude the need for PG&E to construct and operate a separate, second records storage facility to store a duplicate set of spent fuel, high-level radioactive waste, and reactor-related GTCC waste records.

In its exemption request, PG&E indicated that the NRC-approved QA program for the DCPP meets the provisions of ANSI N45.2.9–1974. The requirements in ANSI N45.2.9–1974 have been endorsed by the NRC as an acceptable method of satisfying the recordkeeping requirements of 10 CFR part 50, appendix B, which states, in part, that ''[c]onsistent with applicable regulatory requirements [including 10 CFR 50.71(d)(1)], the applicant shall establish requirements concerning record retention, such as duration, location, and assigned responsibility.'' Further requirements for the maintenance of nuclear power plant records are provided in 10 CFR 50.71(d)(1), which states, in part, that, ''The licensee shall maintain adequate safeguards against tampering with and loss of records.'' ANSI N.45.2.9–1974 also satisfies the requirements of 10 CFR 72.72 by providing for adequate maintenance of records regarding the identity and history of the spent fuel in storage. Such records would be subject to and need to be protected from the same types of degradation mechanisms or loss as nuclear power plant Quality Assurance records.

Environmental Impacts of the Proposed Action: An exemption from the requirement to store a duplicate set of ISFSI records at a separate location has no impact on the environment. Storage of records does not change the methods by which spent fuel will be handled and stored at the DCPP ISFSI and does not change the amount of effluents, radiological or non-radiological, associated with the ISFSI.

Alternative to the Proposed Action: As an alternative to the proposed action, the staff considered denial of the proposed action (*i.e.*, the ''no-action'' alternative). Denial of the application would result in no change in current environmental impacts. The environmental impacts of the proposed action and the alternative action are similar.

Agencies and Persons Consulted: On August 12, 2003, Ms. Barbara Byron, Nuclear Policy Advisor for the California Energy Commission, was contacted regarding the environmental assessment for the proposed action and had no comments. The NRC staff has determined that a consultation under Section 7 of the Endangered Species Act is not required because the proposed action is administrative/procedural in nature and will not affect listed species or critical habitat. The NRC staff has also determined that the proposed action is not a type of activity having the potential to cause effects on historic properties because it is an administrative/procedural action. Therefore, no further consultation is required under Section 106 of the National Historic Preservation Act.

Finding of No Significant Impact

The environmental impacts of the proposed action have been reviewed in accordance with the requirements set forth in 10 CFR part 51. Based upon the foregoing EA, the Commission finds that the proposed action of granting the exemption from 10 CFR 72.72(d), so that PG&E may store spent fuel records for the proposed ISFSI in a single records storage facility, in accordance with its NRC-approved Quality Assurance program (which satisfies the criteria of 10 CFR part 50, appendix B, and 10 CFR 50.71(d)(1)), will not significantly impact the quality of the human environment. Accordingly, the Commission has determined that a Finding of No Significant Impact is appropriate, and that an environmental impact statement for the proposed exemption is not necessary.

For further details with respect to this exemption request, see the PG&E ISFSI license application, and the accompanying Safety Analysis Report, dated December 21, 2001. The request for exemption was docketed under 10 CFR part 72, Docket No. 72–26. These documents are available for public inspection at the Commission's Public Document Room, One White Flint North Building, 11555 Rockville Pike, Rockville, MD, or from the publicly available records component of NRC's Agencywide Documents Access and Management System (ADAMS). These documents may be accessed through the NRC's Public Electronic Reading Room on the Internet at *http://www.nrc.gov/reading-rm/adams.html.* If there are problems in accessing the documents located in ADAMS, contact the NRC Public Document Room (PDR) Reference staff at 1–800–397–4209, 301–415–4737 or by e-mail at *pdr@nrc.gov.*

Dated at Rockville, Maryland, this 2nd day of October, 2003.

For the Nuclear Regulatory Commission.

James R. Hall,

Senior Project Manager, Spent Fuel Project Office, Office of Nuclear Material Safety and Safeguards.

[FR Doc. 03–25746 Filed 10–9–03; 8:45 am]

BILLING CODE 7590–01–P

NUCLEAR REGULATORY COMMISSION

[Docket Nos. 50–498 and 50–499]

STP Nuclear Operating Company; Notice of Withdrawal of Application for Amendment to Facility Operating Licenses

The U.S. Nuclear Regulatory Commission (the Commission) has granted the request of STP Nuclear Operating Company (the licensee) to withdraw its February 14, 2002, and its supplement dated October 24, 2002, applications for proposed amendments to Facility Operating License Nos. NPF–76 and No. NPF–80 for the South Texas Project (STP), Units 1 and 2, located in Matagorda County, Texas.

The proposed amendments would have modified STP, Units 1 and 2, Technical Specification (TS) 3.3.2 requirements for Loss of Power Instrumentation (Functional Unit 8) and TSs 3.8.1.1, 3.8.1.2, and 3.8.1.3 for AC Sources.

The Commission had previously issued a Notice of Consideration of Issuance of Amendment published in the **Federal Register** on April 30, 2002, (67 FR 21294). However, by letter dated September 22, 2003 (NOC–AE–03001472), the licensee withdrew the proposed amendments and supersedes, in its entirety the application dated February 14, 2002, and its supplement dated October 24, 2002, for which the staff proposed no significant hazard consideration determination on April 30, 2002 (67 FR 21294). This application withdraws the proposed changes to TS 3.3.2 requirements for Loss of Power Instrumentation and the proposed changes to TS 3.8.1.1 for AC Sources. The changes proposed for TS 3.3.2 are described in the application dated September 22, 2003 (NOC–AE–03001578). The changes proposed for TSs 3.8.1.2 and 3.8.1.3 are documented in the September 22, 2003 (NOC–AE–03001472) application.

For further details with respect to this action, see the application for amendment dated February 14, 2002, and its supplement dated October 24, 2002, and the licensee's letters dated September 22, 2003, which withdrew the application for license amendment. Documents may be examined, and/or copied for a fee, at the NRC's Public Document Room (PDR) located at One White Flint North, Public File Area 01 F21, 11555 Rockville Pike (first floor), Rockville, Maryland. Publicly available records will be accessible electronically from the Agencywide Documents Access and Management Systems (ADAMS) Public Electronic Reading Room on the Internet at the NRC Web site, *http://www.nrc.gov/reading-rm/adams/html*. Persons who do not have access to ADAMS or who encountered problems in accessing the documents located in ADAMS, should contact the NRC PDR Reference staff by telephone at 1–800–397–4209 or 301–415–4737 or by e-mail to *pdr@nrc.gov*.

Dated at Rockville, Maryland, this 30th day of September 2003.

For the Nuclear Regulatory Commission.

John L. Minns,

Project Manager, Section 1, Project Directorate IV, Division of Licensing Project Management, Office of Nuclear Reactor Regulation.

[FR Doc. 03–25743 Filed 10–9–03; 8:45 am]

BILLING CODE 7590–01–P

NUCLEAR REGULATORY COMMISSION

[Docket No. 50–483]

Union Electric Company; Notice of Withdrawal of Application for Amendment to Facility Operating License

The U.S. Nuclear Regulatory Commission (the Commission) has granted the request of Union Electric Company (the licensee) to withdraw its application dated October 3, 2002, as supplemented by letter dated June 5, 2003, for proposed amendment to Facility Operating License No. NPF–30 for the Callaway Plant, Unit 1, located in Callaway County, Missouri.

The proposed amendment would have revised the definition of steam generator (SG) tube inspection in Technical Specification 5.5.9, ''Steam Generator (SG) Tube Surveillance Program.'' The amendment would add a requirement for using the rotating pancake coil (RPC) to the H* depth in the tubesheet.

The Commission had previously issued a Notice of Consideration of Issuance of Amendment published in the **Federal Register** on October 18, 2002 (67 FR 64422). However, as stated in the staff's letter dated September 15, 2003, the licensee has agreed to withdraw the proposed change.

For further details with respect to this action, see the application for amendment dated October 3, 2002, as supplemented by the licensee's letter dated June 5, 2003, and the staff's letter dated September 15, 2003. Documents may be examined, and/or copied for a fee, at the NRC's Public Document Room (PDR), located at One White Flint North, Public File Area O1 F21, 11555 Rockville Pike (first floor), Rockville, Maryland. Publicly available records will be accessible electronically from the Agencywide Documents Access and Management Systems (ADAMS) Public Electronic Reading Room on the Internet at the NRC Web site, *http://www.nrc.gov/reading-rm/adams/html*. Persons who do not have access to ADAMS or who encounter problems in accessing the documents located in ADAMS, should contact the NRC PDR Reference staff by telephone at 1–800–397–4209, or 301–415–4737 or by e-mail to *pdr@nrc.gov*.

Dated at Rockville, Maryland, this 15th day of September, 2003.

For the Nuclear Regulatory Commission.

Jack Donohew,

Senior Project Manager, Section 2, Project Directorate IV, Division of Licensing Project Management, Office of Nuclear Reactor Regulation.

[FR Doc. 03–25744 Filed 10–9–03; 8:45 am]

BILLING CODE 7590–01–P

NUCLEAR REGULATORY COMMISSION

Regulatory Guide; Issuance, Availability

The Nuclear Regulatory Commission (NRC) has issued a revision of a guide in its Regulatory Guide Series. This series has been developed to describe and make available to the public such information as methods acceptable to the NRC staff for implementing specific parts of the NRC's regulations, techniques used by the staff in its review of applications for permits and licenses, and data needed by the NRC staff in its review of applications for permits and licenses.

Revision 1 of Regulatory Guide 1.180, ''Guidelines for Evaluating Electromagnetic and Radio-Frequency Interference in Safety-Related Instrumentation and Control Systems,'' provides guidance to licensees and applicants on methods acceptable to the NRC staff for complying with the NRC's regulations on design, installation, and testing practices for addressing the effects of electromagnetic and radio-frequency interference and power surges on safety-related instrumentation and control systems.

Comments and suggestions in connection with items for inclusion in guides currently being developed or improvements in all published guides are encouraged at any time. Written comments may be submitted to the Rules and Directives Branch, Division of Administrative Services, Office of Administration, U.S. Nuclear Regulatory Commission, Washington DC 20555. Questions on the content of this guide may be directed to Ms. C. Antonescu, (301) 415–6792; e-mail *cea1@nrc.gov*.

Regulatory guides are available for inspection or downloading at the NRC's Web site at <*http://www.nrc.gov*> under Regulatory Guides and in NRC's Electronic Reading Room (ADAMS System) at the same site. Single copies of regulatory guides may be obtained free of charge by writing the Reproduction and Distribution Services Section, U.S. Nuclear Regulatory Commission, Washington, DC 20555–0001, or by fax to (301) 415–2289, or by e-mail to <*distribution@nrc.gov*>. Issued guides may also be purchased from the National Technical Information Service (NTIS) on a standing order basis. Details on this service may be obtained by writing NTIS at 5285 Port Royal Road, Springfield, VA 22161; telephone 1–800–553–6847; <*http://www.ntis.gov/*>. Regulatory guides are not copyrighted, and Commission approval is not required to reproduce them. (5 U.S.C. 552(a)).

Dated at Rockville, MD this 30th day of September 2003.

For the Nuclear Regulatory Commission.

Jack R. Strosnider,

Deputy Director, Office of Nuclear Regulatory Research.

[FR Doc. 03–25745 Filed 10–9–03; 8:45 am]

BILLING CODE 7590–01–P

POSTAL SERVICE

Board of Governors' Sunshine Act Meeting; Notification of Item Added to Meeting Agenda

DATE OF MEETING: October 2, 2003.

STATUS: Closed.

PREVIOUS ANNOUNCEMENT: 68 FR 55665, September 26, 2003.

ADDITION: Office of Inspector General Fiscal Year 2004 Budget. At its meeting on October 2, 2003, the Board of Governors of the United States Postal Service voted unanimously to add this item to the agenda of its closed session and that no earlier announcement was possible. The General Counsel of the United States Postal Service certified that in her opinion discussion of this item could be properly closed to public observation.

FOR FURTHER INFORMATION CONTACT: William T. Johnstone, Secretary of the Board, U.S. Postal Service, 475 L'Enfant Plaza, SW., Washington, DC 20260–1000.

William T. Johnstone,

Secretary.

[FR Doc. 03–25859 Filed 10–7–03; 4:31 pm]

BILLING CODE 7710–12–M

SECURITIES AND EXCHANGE COMMISSION

Sunshine Act Meeting

Notice is hereby given, pursuant to the provisions of the Government in the Sunshine Act, Public Law 94–409, that the Securities and Exchange Commission will hold the following meeting during the week of October 13, 2003:

A Closed Meeting will be held on Thursday, October 16, 2003, at 10 a.m.

Commissioners, Counsel to the Commissioners, the Secretary to the Commission, and recording secretaries will attend the Closed Meeting. Certain staff members who have an interest in the matters may also be present.

The General Counsel of the Commission, or his designee, has certified that, in his opinion, one or more of the exemptions set forth in 5 U.S.C. 552b(c) (5), (7), (8) and (10) and 17 CFR 200.402(a) (5), (7), (8), and (10), permit consideration of the scheduled matters at the Closed Meeting.

The subject matter of the Closed Meeting scheduled for Thursday, October 16, 2003, will be:

Regulatory matters regarding financial institutions; and Opinions.

At times, changes in Commission priorities require alterations in the scheduling of meeting items. For further information and to ascertain what, if any, matters have been added, deleted or postponed, please contact:

The Office of the Secretary at (202) 942–7070.

Dated: October 7, 2003.

Jonathan G. Katz,

Secretary.

[FR Doc. 03–25860 Filed 10–7–03; 4:40 pm]

BILLING CODE 8010–01–P

SECURITIES AND EXCHANGE COMMISSION

[Release No. 34–48591; File No. SR–CBOE–2003–17]

Self-Regulatory Organizations; Notice of Filing and Order Granting Accelerated Approval of a Proposed Rule Change and Amendment No. 1 Thereto by the Chicago Board Options Exchange, Inc. Relating to the Listing and Trading of Options on Russell Indexes

October 2, 2003.

Pursuant to section 19(b)(1) of the Securities Exchange Act of 1934 (''Act''),[1] and Rule 19b–4 thereunder,[2] notice is hereby given that on May 5, 2003, the Chicago Board Options Exchange, Inc. (''CBOE'') filed with the Securities and Exchange Commission (''Commission'') the proposed rule change as described in Items I and II below, which Items have been prepared by the CBOE. On September 24, 2003, the CBOE filed an amendment to the proposed rule change.[3] The Commission is publishing this notice to solicit comments on the proposed rule change from interested persons, and to approve the proposed rule change, as amended, on an accelerated basis.

I. Self-Regulatory Organization's Statement of the Terms of Substance of the Proposed Rule Change

The CBOE proposes to amend certain rules to provide for the listing and trading on the Exchange of options on several different Russell Indexes. The text of the proposed rule change is available at the Office of the Secretary, CBOE, and at the Commission.

II. Self-Regulatory Organization's Statement of the Purpose of, and Statutory Basis for, the Proposed Rule Change

In its filing with the Commission, the CBOE included statements concerning the purpose of, and basis for, the proposed rule change and discussed any comments it received on the proposed rule change. The text of these statements

[1] 15 U.S.C. 78s(b)(1).

[2] 17 CFR 240.19b–4.

[3] *See* letter from James Flynn, Esq., Legal Division, CBOE, to Nancy Sanow, Assistant Director, Division of Market Regulation, Commission, dated September 23, 2003 (''Amendment No. 1''). Amendment No. 1 replaces the original filing in its entirety, and: (1) Clarifies that the CBOE will monitor each Russell Index on an annual basis and notify the Commission in the event that certain specified standards are not satisfied; (2) notes in the purpose section of the proposal that the CBOE will have complete access to the trading information of the component securities of the Russell Indexes; and (3) amends the strike prices for options on the Russell Indexes.

may be examined at the places specified in Item IV below. The CBOE has prepared summaries, set forth in Sections A, B, and C below, of the most significant aspects of such statements.

A. Self-Regulatory Organization's Statement of the Purpose of, and Statutory Basis for, the Proposed Rule Change

1. Purpose

The purpose of the proposed rule change is to permit the Exchange to list and trade cash-settled, European-style, stock index options on the Russell 1000® Index, Russell 1000® Growth Index, Russell 1000® Value Index, Russell 2000® Growth Index, Russell 2000® Value Index, Russell 3000® Index, Russell 3000® Growth Index, Russell 3000® Value Index, Russell Midcap® Index, Russell Midcap® Growth Index, Russell Midcap® Value Index (''Russell Indexes'' or ''Indexes''). Each Russell Index is a capitalization-weighted index containing various groups of stocks drawn from the largest 3,000 companies incorporated in the U.S. and its territories. All component securities of the Russell Indexes are traded on the New York Stock Exchange, Inc. (''NYSE''), the American Stock Exchange LLC (''AMEX''), or the NASDAQ. The CBOE currently is approved to trade options on the Russell 2000® Index.[4]

Index Design. The Russell Indexes are designed to be a comprehensive representation of the investable U.S. equity market. These Indexes are capitalization-weighted and include only common stocks belonging to corporations domiciled in the U.S. and its territories and that are traded on the NYSE, NASDAQ or the AMEX. The component securities are weighted by their ''available'' market capitalization, which is calculated by multiplying the primary market price by the ''available'' shares; that is, total shares outstanding less corporate cross-owned shares, ESOP and LESOP-owned shares comprising 10% or more of shares outstanding, unlisted share classes and shares held by an individual, a group of individuals acting together, or a corporation not in the index that owns 10% or more of the shares outstanding. The following is a brief description of each index:

Russell 3000®	Measures the performance of the 3,000 largest U.S. companies based on total market capitalization, which represents approximately 98% of the investable U.S. equity market.
Russell 1000®	Measures the performance of the 1,000 largest companies in the Russell 3000 Index, which represents approximately 92% of the total market capitalization of the Russell 3000 Index.
Russell Midcap®	Measures the performance of the 800 smallest companies in the Russell 1000 Index, which represent approximately 26% of the total market capitalization of the Russell 1000 Index.
Russell 1000® Growth	Measures the performance of those Russell 1000 companies with higher price-to-book ratios and higher forecasted growth values.
Russell 1000® Value	Measures the performance of those Russell 1000 companies with lower price-to-book ratios and lower forecasted growth values.
Russell 2000® Growth	Measures the performance of those Russell 2000 companies with higher price-to-book ratios and higher forecasted growth values.
Russell 2000® Value	Measures the performance of those Russell 2000 companies with lower price-to-book ratios and lower forecasted growth values.
Russell 3000® Growth	Measures the performance of those Russell 3000 Index companies with higher price-to-book ratios and higher forecasted growth values. The stocks in this index are also members of either the Russell 1000 Growth or the Russell 2000 Growth indexes.
Russell 3000® Value	Measures the performance of those Russell 3000 Index companies with lower price-to-book ratios and lower forecasted growth values. The stocks in this index are also members of either the Russell 1000 Value or the Russell 2000 Value indexes.
Russell Midcap® Growth	Measures the performance of those Russell Midcap companies with higher price-to-book ratios and higher forecasted growth values. The stocks are also members of the Russell 1000 Growth index.
Russell Midcap® Value	Measures the performance of those Russell Midcap companies with lower price-to-book ratios and lower forecasted growth values. The stocks are also members of the Russell 1000 Value index.

All companies listed on the NYSE, AMEX or NASDAQ are considered for inclusion in the universe of stocks that comprise the Russell Indexes, with the following exceptions: (1) Stocks trading less than $1.00 per share on May 31; (2) non-U.S. incorporated companies; and (3) preferred and convertible preferred stock, redeemable shares, participating preferred stock, warrants and rights, trust receipts, royalty trusts, limited liability companies, bulletin board, pink sheet stocks, closed-end investment companies, limited partnerships, and foreign stocks. The Russell 3000 Index is comprised of the top 3,000 eligible stocks ranked by available market capitalization. The CBOE represents that all of these components are ''reported securities'' as defined in Rule 11Aa3–1 under the Act.

All of the remaining Russell Indexes are subsets of the Russell 3000 Index. The Growth and Value versions of each primary Index (Russell 1000, Russell 2000, Russell 3000 and Russell Midcap) may contain common components, but the capitalization of those components is apportioned so that the sum of the total capitalization of the Growth and Value indexes equals the total capitalization of the respective primary index.

As provided in Exhibit B to the proposed rule change, on February 28, 2003, the stocks comprising the Russell 3000 Index (and the other Russell Indexes) had an average market capitalization of $2.93 billion ranging from a high of $239 billion (General Electric Co.) to a low of $2 million (Deltagen, Inc.). The number of available shares outstanding ranged from a high of 9.95 billion (General Electric Co.) to a low of 310,000 (Seaboard Corp.), and averaged 123.4 million shares. The six-month average daily trading volume for Russell 3000 Index components was 977,000 shares per day, ranging from a high of 82.6 million shares per day (Cisco Systems, Inc.) to a low of 433 shares per day (Seaboard Corp.). Component securities that averaged less than 50,000 shares per day for the previous six months accounted for 1.3% of the index weight. Over 83% of the Russell 3000 Index components satisfied CBOE's listing criteria for equity options as set forth in CBOE Rule 5.3, representing over 99% of the index weight.

The Russell Indexes themselves range in capitalization from a high of $8.6

[4] *See* Securities Exchange Act Release No. 31382 (October 30, 1992), 57 FR 52802 (November 5, 1992) (order approving the listing and trading of options on the Russell 2000 Index).

trillion (Russell 3000) to a low of $278 billion (Russell 2000 Growth). The number of index components range from a high of 2,933 (Russell 3000) to a low of 453 (Russell Midcap Growth). The Russell 1000 Growth Index has the highest percentage of options-eligible components with 99.8% by weight and 97.7% by number. The Russell 2000 Value index has the lowest percentage of options-eligible components with 90.7% by weight and 74.8% by number.

Calculation. The values of each Index are currently being calculated by Reuters on behalf of the Frank Russell Company and will be disseminated at 15-second intervals during regular CBOE trading hours to market information vendors via the Options Price Reporting Authority (''OPRA'').

The CBOE notes that the methodology used to calculate the value of the Russell Indexes is similar to the methodology used to calculate the value of other well-known market-capitalization weighted indexes. The level of each Index reflects the total market value of the component stocks relative to a particular base period and is computed by dividing the total market value of the companies in each Index by its respective index divisor. The divisor is adjusted periodically to maintain consistent measurement of each Index. The following is a table of base dates and the respective Index levels as of February 28, 2003:

Index	Base date/base index value	2/28/03 Index value
Russell 3000®	12/31/86 = 140.00	468.15
Russell 1000®	12/31/86 = 130.00	446.96
Russell Midcap®	12/31/86 = 200.00	464.62
Russell 1000® Growth	8/31/92 = 200.00	354.20
Russell 1000® Value	8/31/92 = 200.00	430.96
Russell 2000® Growth	3/16/00 = 500.00	190.56
Russell 2000® Value	3/16/00 = 500.00	522.72
Russell 3000® Growth	3/16/00 = 700.00	282.42
Russell 3000® Value	3/16/00 = 700.00	558.95
Russell Midcap® Growth	3/16/00 = 500.00	202.01
Russell Midcap® Value	3/16/00 = 500.00	506.05

Index Option Trading. According to the CBOE, options on these indexes shall be A.M.-settled. In addition to regular Index options, the Exchange may provide for the listing of long-term index option series (''LEAPS®'') in accordance with CBOE Rule 24.9.

For options on each Index, strike prices will be set to bracket the respective index in 2.5-point increments for strikes below $200 and 5 point increments for strikes at or above $200. The minimum tick size for series trading below $3 will be 0.05 and for series trading above $3 the minimum tick will be 0.10. The trading hours for options on the Indexes will be from 8:30 a.m. to 3:15 p.m. Chicago time. Exhibit C to the proposed rule change represents the proposed contract specifications for the options on the Russell Indexes.

Maintenance. The Russell Indexes will be monitored and maintained by the Frank Russell Company. The Frank Russell Company will be responsible for making all necessary adjustments to the Indexes to reflect component deletions, share changes, stock splits, stock dividends (other than an ordinary cash dividend), and stock price adjustments due to restructuring, mergers, or spin-offs involving the underlying components. Some corporate actions, such as stock splits and stock dividends, require simple changes to the available shares outstanding and the stock prices of the component securities. Other corporate actions, such as share issuances, change the market value of the Indexes and would require the use of an index divisor to effect adjustments.

The CBOE represents that the Russell Indexes are re-constituted annually on June 30th, based on prices and available shares outstanding as of the preceding May 31st. New components securities to the Indexes are added only as part of the annual re-constitution and, after which, should a component security be removed from an Index for any reason, it cannot be replaced until the next re-constitution.

The CBOE represents that it will monitor each Russell Index on an annual basis, at which point the Exchange will notify the Commission if: (1) The number of securities in each index drops by ⅓rd or more; (2) 10% or more of the weight of each index is represented by component securities having a market value of less than $75 million; (3) less than 80% of the weight of each Index is represented by component securities that are eligible for options trading pursuant to CBOE Rule 5.3; (4) 10% or more of the weight of each Index is represented by component securities trading less than 20,000 shares per day; or (5) the largest component security accounts for more than 15% of the weight of each Index or the largest five components in the aggregate account for more than 50% of the weight of the Index.

Surveillance. The Exchange represents that CBOE's surveillance procedures are adequate to monitor the trading in options and LEAPS on the Russell Indexes. Further, the CBOE shall have complete access to the information regarding the trading activity of the underlying securities.

Exercise and Settlement. The proposed options on each Index will expire on the Saturday following the third Friday of the expiration month. Trading in the expiring contract month will normally cease at 3:15 p.m. (Chicago time) on the business day preceding the last day of trading in the component securities of the Index (ordinarily the Thursday before expiration Saturday, unless there is an intervening holiday). The exercise settlement value of the Index at option expiration will be calculated by Reuters on behalf of the Frank Russell Company based on the opening prices of the component securities on the last business day prior to expiration. If a component security fails to open for trading, the exercise settlement value will be determined in accordance with CBOE Rules 24.7(e) and 24.9(a)(4). When the last trading day is moved because of Exchange holidays (such as when CBOE is closed on the Friday before expiration), the last trading day for expiring options will be Wednesday and the exercise settlement value of index options at expiration will be determined at the opening of regular trading on Thursday.

Position Limits. The Exchange proposes to establish position limits for options on the Russell Indexes at 50,000 contracts on either side of the market, and no more than 30,000 of such contracts may be in the series in the

nearest expiration month. These limits are identical to the limits applicable to options on the Russell 2000 Index as specified under CBOE Rule 24.4(a).

Exchange Rules Applicable. Except as modified herein, the Rules in Chapter XXIV will govern the trading of options on the aforementioned Russell Indexes on the Exchange. Additionally, CBOE affirms that it possesses the necessary systems capacity to support new series that would result from the introduction of the Russell Index options. CBOE also has been informed that OPRA has the capacity to support such new series.[5]

2. Statutory Basis

The proposed rule change is consistent with section 6(b) of the Act in general,[6] and furthers the objectives of section 6(b)(5) of the Act in particular,[7] in that it will permit trading in options on a broad range of indexes pursuant to rules designed to prevent fraudulent and manipulative acts and practices and to protect investors and the public interest.

B. Self-Regulatory Organization's Statement on Burden on Competition

This proposed rule change does not impose any burden on competition that is not necessary or appropriate in furtherance of the purposes of the Act.

C. Self-Regulatory Organization's Statement on Comments on the Proposed Rule Change Received From Members, Participants or Others

No written comments were solicited or received with respect to the proposed rule change.

III. Solicitation of Comments

Interested persons are invited to submit written data, views and arguments concerning the foregoing, including whether the proposed rule change is consistent with the Act. Persons making written submissions should file six copies thereof with the Secretary, Securities and Exchange Commission, 450 Fifth Street, NW., Washington, DC 20549–0609. Copies of the submission, all subsequent amendments, all written statements with respect to the proposed rule change that are filed with the Commission, and all written communications relating to the proposed rule change between the Commission and any person, other than those that may be withheld from the public in accordance with the provisions of 5 U.S.C. 552, will be available for inspection and copying in the Commission's Public Reference Room. Copies of such filing will also be available for inspection and copying at the principal office of CBOE. All submissions should refer to File No. SR–CBOE–2003–17 and should be submitted by October 31, 2003.

IV. Commission's Findings and Order Granting Accelerated Approval of Proposed Rule Change

The Commission finds that the proposed rule change is consistent with the requirements of the Act and the rules and regulations thereunder applicable to a national securities exchange, and, in particular, the proposal is consistent with section 6(b)(5) of the Act.[8] Specifically, the Commission believes that the listing and trading of options on the Russell Indexes will serve to promote the public interest, as well as to help remove impediments to a free and open securities market. The Commission also believes that the trading of options on the Indexes will allow investors holding positions in some or all of the securities underlying the Indexes to hedge the risks associated with their portfolios more efficiently and effectively. Accordingly, the Commission believes that the options on the Russell Indexes will provide investors with an important trading and hedging mechanism that should reflect accurately the overall movement of stocks in the large capitalization range of U.S. equity securities.[9] By broadening the hedging and investment opportunities of investors, the Commission believes that the trading of options on the Russell Indexes will service to protect investors, promote the public interest and contribute to the maintenance of fair and orderly markets.[10]

The trading of options on the Russell Indexes, however, raises several issues related to the design and structure of the Indexes, customer protection, surveillance, and market impact. For the reasons discussed below, the Commission believes that the CBOE has adequately addressed these issues.

A. Index Design and Structure

The Commission finds it is appropriate and consistent with the Act to classify the Indexes as broad-based, and thus, to permit Exchange rules applicable to the trading of broad-based index options to apply to the Russell Indexes options. Specifically, the Commission believes that the Indexes are broad-based because they reflect a substantial segment of the U.S. equities market, in general, and the largest 3,000 U.S. securities, in particular. The Russell Indexes cumulatively range in market capitalization from a high of $8.6 trillion (Russell 3000) to a low of $278 billion (Russell 2000 Growth). The number of index components range from a high of 2,933 (Russell 3000) to a low of 453 (Russell Midcap Growth). As of February 28, 2003, the stocks comprising the Russell 3000 Index had an average market capitalization of $2.93 billion ranging from a high of $239 billion to a low of $2 million. All of the remaining Russell Indexes are subsets of the Russell 3000 Index. The component securities are diverse, actively traded, and represent a broad cross-section of highly capitalized securities in the U.S. equity market. CBOE has also represented that all of the component securities of the Russell Indexes are reported securities, and over 83% of the Russell 3000 Index components satisfied CBOE's listing criteria for equity options as set forth in CBOE Rule 5.3, representing over 99% of the index weight.[11] Accordingly, the Commission believes that it is appropriate for the Exchange to classify the Indexes as broad-based and apply its rules governing broad-based index options.

B. Potential for Manipulation

The Commission also believes that the large number of component securities, the capitalization and weighting methodology of the Indexes, and the depth of liquidity of the component securities comprising the Indexes,

[5] *See* Exhibit D to this filing.

[6] 15 U.S.C. 78f(b).

[7] 15 U.S.C. 78f(b)(5).

[8] 15 U.S.C. 78f(b)(5).

[9] Pursuant to Section 6(b)(5) of the Act, the Commission must predicate approval of any new securities product upon a finding that the introduction of such product is in the public interest. Such a finding would be difficult with respect to a product that served no hedging or other economic function, because any benefits that might be derived by market participants likely would be outweighed by the potential for manipulation, diminished public confidence in the integrity of the markets, and other valid regulatory concerns. In this regard, the trading of listed index options will provide investors with a hedging vehicle that should reflect the overall market of stocks representing a substantial segment of the U.S. securities market.

[10] In approving this rule, the Commission notes that it has also considered the proposed rule's impact on efficiency, competition, and capital formation. 15 U.S.C. 78c(f).

[11] The CBOE's option listing standards, which are uniform among the options exchanges, provide that a security underlying an option must, among other things, meet the following requirements: (1) The public float must be at least 7 million shares; (2) there must be a minimum of 2,000 stockholders; (3) trading volume must have been at least 2.4 million shares over the preceding twelve months; and (4) the market price per share must have been at least $ 7.50 for a majority of business days during the preceding three calendar months. *See* Interpretations and Policies.01 to CBOE Rule 5.3.

significantly minimize the potential for manipulation of the Indexes. First, as noted above, the Indexes represent a broad cross-section of domestic highly capitalized U.S. companies. Second, the Commission notes that the Index is a capitalization-weighted index whose value is more difficult to affect than that of a price-weighted index. Third, CBOE has represented that it will notify the Commission when: (1) The number of securities in each index drops by one-third or more; (2) 10% or more of the weight of each index is represented by component securities having a market value of less than $75 million; (3) less than 80% of the weight of each Index is represented by component securities that are eligible for options trading pursuant to CBOE Rule 5.3; (4) 10% or more of the weight of each Index is represented by component securities trading less than 20,000 shares per day; or (5) the largest component security accounts for more than 15% of the weight of each Index or the largest five components in the aggregate account for more than 50% of the weight of the Index. Fourth, the CBOE has proposed reasonable position and exercise limits for the Index options that will serve to minimize potential manipulation and other market impact concerns. Accordingly, the Commission believes that these factors minimize the potential for manipulation because it would affect significantly the Indexes values. Moreover, the surveillance procedures discussed below should detect as well as deter potential manipulation and other trading abuses.

C. Customer Protection

The Commission believes that a regulatory system designed to protect public customers must be in place before the trading of sophisticated financial instruments, such as the options on the Russell Indexes (including full-value and reduced value Index LEAPS), can commence on a national securities exchange. The Commission notes that the trading of standardized exchange-traded options occurs in an environment that is designed to ensure, among other things, that: (1) The special risks of options are disclosed to public customers; (2) only investors capable of evaluating and bearing the risk of options trading are engaged in such trading; and (3) special compliance procedures are applicable to options accounts. Accordingly, because the index options and index LEAPS will be subject to the same regulatory regime as the other standardized options traded on the CBOE, the Commission believes that adequate safeguards are in place to ensure the protection of investors in the Russell Indexes options.[12]

D. Surveillance

The Commission generally believes that a surveillance sharing agreement between an exchange proposing to list a stock index derivative product and the exchange(s) trading the stocks underlying the derivative product is an important measure for surveillance of the derivative and underlying securities markets. Such agreements ensure the availability of information necessary to detect and deter potential manipulations and other trading abuses, thereby making the stock index product less readily susceptible to manipulation. In this regard, the NYSE, AMEX, and the NASD are all members of ISG. In addition, the CBOE will apply the same surveillance procedures as those used for existing broad-based index options trading on the CBOE. Further, CBOE has represented that it will have complete access to the information regarding the trading activity of the underlying securities.

E. Market Impact

The Commission believes that the listing and trading of options on the Russell Indexes on the Exchange will not adversely impact the underlying securities markets. First, as described above, the Indexes are broad-based and no one stock or industry group dominates any particular Index. Second, as noted above, the stocks contained in the Indexes generally are not inactively traded. Third, existing CBOE stock index options rules and surveillance procedures will apply to Russell Indexes options. Fourth, the Exchange has established reasonable position and exercise limits for the Russell Indexes options that will serve to minimize potential manipulation and market impact concerns. Fifth, the risk to investors of contra-party non-performance will be minimized because the Index options will be issued and guaranteed by the Options Clearing Corporation just like any other standardized option traded in the U.S. Lastly, the Commission believes that settling options on the Russell Indexes based on the opening prices of component securities is reasonable and consistent with the Act because it may contribute to the orderly unwinding of Index options positions upon expiration.

The Commission finds good cause for approving the proposed rule change, and Amendment No. 1 thereto, prior to the thirtieth day after the date of publication of notice in the **Federal Register**. The Commission believes that the trading of options on the Russell Indexes does not raise novel regulatory issues that were not addressed in previous filings regarding the listing and trading of similar instruments on the CBOE. The Commission further believes that the options on the Russell Indexes will provide investors with an additional investment choice and that accelerated approval of the proposal will allow investors to begin trading these index options promptly.

V. Conclusion

It is therefore ordered, pursuant to section 19(b)(2) of the Act,[13] that the proposed rule change (SR–CBOE–2003–17), as amended, is approved on an accelerated basis.

For the Commission, by the Division of Market Regulation, pursuant to delegated authority.[14]

Margaret H. McFarland,

Deputy Secretary.

[FR Doc. 03–25674 Filed 10–9–03; 8:45 am]

BILLING CODE 8010–01–P

[12] In addition, CBOE has represented that it and OPRA have the necessary systems capacity to support these new series of options that would result from the introduction of Index options and Index LEAPS. See Exhibit D to the proposed rule change (letter from Joe Corrigan, Executive Director, OPRA, to Bill Speth, Director of Research, CBOE, dated March 24, 2003).

[13] 15 U.S.C. 78s(b)(2).

[14] 17 CFR 200.30–3(a)(12).

SECURITIES AND EXCHANGE COMMISSION

[Release No. 34–48592; File No. SR–NASD–2003–44]

Self-Regulatory Organizations; Notice of Filing of Proposed Rule Change and Amendment Nos. 1 and 2 Thereto by the National Association of Securities Dealers, Inc. To Modify the Existing Pilot Program Relating to the Compliance Periods for the Nasdaq Bid Price Criteria

October 3, 2003.

Pursuant to Section 19(b)(1) of the Securities Exchange Act of 1934 (''Act'')[1] and Rule 19b–4 thereunder,[2] notice is hereby given that on March 18, 2003, the National Association of Securities Dealers, Inc. (''NASD''), through its subsidiary, the Nasdaq Stock Market, Inc. (''Nasdaq''), filed with the Securities and Exchange Commission (''Commission'') the proposed rule change as described in Items I, II, and III below, which Items have been prepared by Nasdaq. Nasdaq submitted

[1] 15 U.S.C. 78s(b)(1).

[2] 17 CFR 240.19b–4.

amendments to the proposed rule change on March 24, 2003,[3] and September 26, 2003.[4] The Commission is publishing this notice to solicit comments on the proposed rule change, as amended, from interested persons.

I. Self-Regulatory Organization's Statement of the Terms of Substance of the Proposed Rule Change

Nasdaq is proposing to modify an existing pilot program relating to compliance periods for the bid price criteria for Nasdaq National Market and Nasdaq SmallCap Market issuers. Nasdaq has represented that, during the pilot period, it would assess the effectiveness of these changes.

Below is the text of the proposed rule change, including the revisions to the proposed rule text made by Amendment Nos. 1 and 2. Proposed new language is italicized; proposed deletions are in brackets.

* * * * *

4310. Qualification Requirements for Domestic and Canadian Securities

To qualify for inclusion in Nasdaq, a security of a domestic or Canadian issuer *shall* [will] satisfy all applicable requirements contained in paragraphs (a) or (b), and (c) hereof.

(a)–(b) No change.

(c) In addition to the requirements contained in paragraph (a) or (b) above, and unless otherwise indicated, a security *shall* [will] satisfy the following criteria for inclusion in Nasdaq:

(1)–(7) No change.

(8)(A)–(C) No change.

(D) A failure to meet the continued inclusion requirement for minimum bid price on The Nasdaq SmallCap Market shall be determined to exist only if the deficiency continues for a period of 30 consecutive business days. Upon such failure, the issuer shall be notified promptly and shall have a period of 180 calendar days from such notification to achieve compliance. If the issuer has not been deemed in compliance prior to the expiration of the 180 day compliance period, it shall be afforded an additional 180 day compliance period, provided, that on the 180th day *of the first compliance period,* [following notification of this deficiency,] the issuer *demonstrates that it* meets the criteria for initial inclusion set forth in Rule 4310(c)[(2)(A)] *(except for the bid price requirement set forth in Rule 4310(c)(4))* based on the issuer's most recent public[ly filed] filings and market [financial] information. *If the issuer has publicly announced information (e.g., in an earnings release) indicating that it no longer satisfies the applicable initial inclusion criteria, it shall not be eligible for the additional compliance period under this rule.*

If on the 180th day of the second compliance period, the issuer has not been deemed in compliance during such compliance period but it satisfies the criteria for initial inclusion set forth in Rule 4310(c) (except for the bid price requirement set forth in Rule 4310(c)(4)), the issuer shall be provided with an additional compliance period up to its next annual shareholder meeting, provided: the issuer commits to seek shareholder approval for a reverse stock split to address the bid price deficiency at or before its next annual meeting, and to promptly thereafter effect the reverse stock split; and the shareholder meeting to seek such approval is scheduled to occur no later than two years from the original notification of the bid price deficiency. If the issuer fails to timely propose, or obtain approval for, or promptly execute the reverse stock split, Nasdaq shall immediately institute delisting proceedings upon such failure. [If the issuer has not been deemed in compliance prior to the expiration of the second 180 day compliance period, it shall be afforded an additional 90 day compliance period, provided that on the last day of the second 180 day compliance period, the issuer meets any of the three criteria for initial inclusion set forth in Rule 4310(c)(2)(A) based on the issuer's most recent publicly filed financial information.] Compliance can be achieved during any compliance period by meeting the applicable standard for a minimum of 10 consecutive business days.

(E) No change.

(9)–(29) No change.

(d) No change.

4450. Quantitative Maintenance Criteria

After designation as a Nasdaq National Market security, a security must substantially meet the criteria set forth in paragraphs (a) or (b), and (c), (d), (e), (f), (g), (h) or (i) below to continue to be designated as a national market system security. A security maintaining its designation under paragraph (b) need not also be in compliance with the quantitative maintenance criteria in the Rule 4300 series.

(a)–(d) No change.

(e) Compliance Periods

(1) No change.

(2) A failure to meet the continued inclusion requirement for minimum bid price shall be determined to exist only if the deficiency continues for a period of 30 consecutive business days. Upon such failure, the issuer shall be notified promptly and shall have a period of 180 calendar days from such notification to achieve compliance. If the issuer has not been deemed in compliance prior to the expiration of the 180 day compliance period, it *shall* [will] be afforded an additional 180 day compliance period, provided, that on the 180th day following the notification of the deficiency, the issuer demonstrates that it meets the criteria for initial inclusion set forth in [either] Rule[s] 4420[(a)(1) and (a)(5), Rule 4420(b)(1) or Rule 4420(c)(6),] (except for the bid price requirement set forth in Rule 4420(a)(4), (b)(4) or (c)(3)) based on the issuer's most recent public[ly filed financial] *filings and market* information. *If the issuer has publicly announced information (e.g., in an earnings release) indicating that it no longer satisfies the applicable initial inclusion criteria, it shall not be eligible for the additional compliance period under this rule.*

If the issuer has not been deemed in compliance 45 calendar days before the expiration of the second 180 day compliance period, the Listing Qualifications Department shall issue a letter (the ''Staff Warning Letter''), notifying the issuer of its non-compliance, the pending expiration of the compliance period, and its right to request a hearing. The issuer must request a hearing within seven calendar days of the date of the Staff Warning Letter in order to preserve its right to review pursuant to Rule 4820. If the issuer requests a hearing, the hearing shall be scheduled for a date promptly following the expiration of the compliance period. If the issuer fails to request a hearing and does not regain compliance prior to the expiration of the compliance period, it shall be delisted immediately following the compliance period with no further opportunity for a hearing. Compliance can be achieved *during any compliance period* by meeting the applicable standard for a minimum of 10 consecutive business days during the [180 day] applicable compliance period.

Nasdaq may, in its discretion, require an issuer to maintain a bid price of at least $1.00 per share for a period in excess of ten consecutive business days,

[3] *See* letter from Sara Nelson Bloom, Associate General Counsel, Nasdaq, to Katherine A. England, Division of Market Regulation, Commission, dated March 21, 2003 (''Amendment No. 1''). In Amendment No. 1, Nasdaq made minor revisions to the original proposal.

[4] *See* letter from Edward S. Knight, Executive Vice President, Nasdaq, to Katherine A. England, Division of Market Regulation, Commission, dated September 25, 2003 (''Amendment No. 2''). In Amendment No. 2, Nasdaq revised the length of the compliance periods and added to the criteria that issuers would have to meet to avail themselves of such periods.

but generally no more than 20 consecutive business days, before determining that the issuer has demonstrated an ability to maintain long-term compliance. In determining whether to monitor bid price beyond ten business days, Nasdaq *shall* [will] consider the following four factors: (i) margin of compliance (the amount by which the price is above the $1.00 minimum standard); (ii) trading volume (a lack of trading volume may indicate a lack of bona fide market interest in the security at the posted bid price); (iii) the market maker montage (the number of market makers quoting at or above $1.00 and the size of their quotes); and, (iv) the trend of the stock price (is it up or down).

(3)–(4) No change.

(f)–(i) No change.

4820. Request for Hearing

(a) An issuer may, within seven calendar days of the earlier of the date of the Staff Determination *or the Staff Warning Letter referenced in Rule 4450(e),* request either a written or oral hearing to review the Staff Determination. Requests for hearings should be filed with The Nasdaq Office of Listing Qualifications Hearings (the ''Hearings Department''). A request for a hearing *shall* [will] stay the delisting action pending the issuance of a written determination by a Listing Qualifications Panel. If no hearing is requested within the seven calendar day period, *the right to request review is waived, and* the Staff Determination *shall* [will] take immediate effect. All hearings *shall* [will] be held before a Listing Qualifications Panel as described in Rule 4830. All hearings *shall* [will] be scheduled, to the extent practicable, within 45 days of the date that the request for hearing is filed, at a location determined by the Hearings Department. The Hearings Department *shall* [will] make an acknowledgment of the issuer's hearing request stating the date, time and location of the hearing, and the deadline for written submissions to the Listing Qualifications Panel. The issuer *shall* [will] be provided at least 10 calendar days notice of the hearing unless the issuer waives such notice.

(b)–(c) No change.

* * * * *

II. Self-Regulatory Organization's Statement of the Purpose of, and Statutory Basis for, the Proposed Rule Change

In its filing with the Commission, Nasdaq included statements concerning the purpose of and basis for the proposed rule change and discussed any comments it received on the proposed rule change. The text of these statements may be examined at the places specified in Item IV below. Nasdaq has prepared summaries, set forth in Sections A, B, and C below, of the most significant aspects of such statements.

A. Self-Regulatory Organization's Statement of the Purpose of, and Statutory Basis for, the Proposed Rule Change

1. Purpose

Following the extraordinary market conditions surrounding the September 11th tragedy, Nasdaq implemented a moratorium on enforcement of its bid price rules.[5] In January 2002, immediately after the moratorium ended, Nasdaq implemented a pilot program to extend certain compliance periods applicable to the bid price rule.[6] The pilot program was modified and extended to December 31, 2004.[7] The current pilot program provides for a 180-day bid price compliance period for SmallCap Market issuers. Thereafter, SmallCap Market issuers are allowed an additional 180-day compliance period if they meet heightened requirements based upon certain core initial listing standards. SmallCap issuers are allowed an additional 90-day compliance period, provided that the issuer continues to meet the heightened requirements. National Market companies currently receive a single 180-day bid price compliance period.

After careful consideration, Nasdaq continues to believe that the bid price requirements are valuable measures of compliance. However, Nasdaq believes that the measurement periods for the requirements should be extended and modified to provide additional flexibility to both National Market and SmallCap Market companies that are engaged in turnaround strategies. Nasdaq proposes that these modifications also be subject to implementation under the pilot program currently in effect through December 31, 2004.

Specifically, this proposal would modify and extend the pilot as follows:

- Provide an additional 180-calendar-day compliance period for those National Market issuers able to demonstrate compliance with the National Market initial listing criteria set forth in Rule 4420 (except for the bid price requirement set forth in Rule 4420(a)(4), (b)(4) or (c)(3);
- Maintain the initial 180-calendar-day bid price compliance period for all SmallCap Market issuers, and provide a second 180-day compliance period for SmallCap Market issuers that satisfy the initial listing criteria set forth in Rule 4310(c) (except for the bid price requirement set forth in Rule 4310(c)(4)). This is more stringent than the current compliance period which conditions eligibility for the second 180-day compliance period on meeting only the financial or ''core'' initial listing criteria, rather than all initial listing criteria. After the two initial 180-day compliance periods, instead of the additional 90-day compliance period provided by the recent modification to the pilot program,[8] issuers would be provided with an additional compliance period up to their next annual shareholder meeting provided: the issuer commits to seek shareholder approval for a reverse stock split to address the bid price deficiency at or before its next annual meeting, and to promptly thereafter effect the reverse stock split; and the shareholder meeting to seek such approval is scheduled to occur no later than two years from the original notification of the bid price deficiency. If the issuer fails to timely propose, or obtain approval for, or promptly execute the reverse stock split, Nasdaq shall immediately institute delisting proceedings upon such failure.

Nasdaq believes that the proposal appropriately distinguishes between the National Market and the SmallCap Market by providing a relatively shorter compliance period for National Market issuers compared to that available to SmallCap Market issuers, and by expediting the National Market issuer delisting process. The proposal further provides that SmallCap Market issuers eligible for the longest compliance periods must take concrete corrective action to address the bid price deficiency or face prompt delisting. Nasdaq further believes that the proposal would benefit investors by lessening the disruption that can be associated with an issuer's move from the Nasdaq Stock Market to less liquid and regulated markets.

Implementation. Nasdaq proposes that this rule be effective upon Commission approval, and that issuers that are at that time in the Rule 4800 Series review process be afforded the benefit of the new rule. As such, issuers would be extended any additional compliance periods provided by this

[5] *See* Securities Exchange Act Release No. 44857 (September 27, 2001), 66 FR 50485 (October 3, 2001) (SR–NASD–2001–61).

[6] *See* Securities Exchange Act Release No. 45387 (February 4, 2002), 67 FR 6306 (February 11, 2002) (SR–NASD–2002–13).

[7] *See* Securities Exchange Act Release No. 47482 (March 11, 2003), 68 FR 12729 (March 17, 2003) (SR–NASD–2003–34).

[8] *See id.*

rule to which they would have been entitled had the rule been in effect upon their original notification of the bid price deficiency.[9] Accordingly, issuers would be eligible for extended compliance periods in circumstances where they meet the terms of the new rule. Those issuers that do not meet the eligibility requirements under the new rule would be afforded an opportunity to present a definitive plan to demonstrate compliance with the bid price requirement or eligibility for the new compliance periods, and panels could determine to grant exceptions in order for such issuers to effectuate such plans. In addition, such issuers would be permitted to complete any pending compliance period that was extended pursuant to the rule in effect when the compliance period began.[10] However, in no event shall a SmallCap Market issuer be afforded a period that exceeds two years from the date of the original bid price deficiency notification, absent extraordinary circumstances.[11] All time periods under the new rule would run concurrent with the prior rule, from the date of the original bid price deficiency notification.

2. Statutory Basis

Nasdaq believes that the proposed rule change, as amended, is consistent with Section 15A(b)(6) of the Act[12] in that it is designed to prevent fraudulent and manipulative acts and practices and to protect investors and the public interest. As previously mentioned, Nasdaq is proposing this rule change to allow issuers additional time to comply with the bid price requirements if they demonstrate compliance with heightened listing standards. Under the proposed rule change, issuers meeting heightened standards would have additional time to execute business and compliance plans, thereby, in Nasdaq's view, minimizing disruption to investors and providing greater transparency and consistency.

B. Self-Regulatory Organization's Statement on Burden on Competition

Nasdaq does not believe that the proposed rule change, as amended, would result in any burden on competition that is not necessary or appropriate in furtherance of the purposes of the Act.

C. Self-Regulatory Organization's Statement on Comments on the Proposed Rule Change Received From Members, Participants, or Others

Written comments were neither solicited nor received.

III. Date of Effectiveness of the Proposed Rule Change and Timing for Commission Action

Within 35 days of the date of publication of this notice in the **Federal Register** or within such longer period (i) as the Commission may designate up to 90 days of such date if it finds such longer period to be appropriate and publishes its reasons for so finding, or (ii) as to which the self-regulatory organization consents, the Commission will:

(A) By order approve such proposed rule change; or

(B) Institute proceedings to determine whether the proposed rule change should be disapproved.

IV. Solicitation of Comments

Interested persons are invited to submit written data, views, and arguments concerning the foregoing, including whether the proposed rule change, as amended, is consistent with the Act. Persons making written submissions should file six copies thereof with the Secretary, Securities and Exchange Commission, 450 Fifth Street, NW., Washington, DC 20549–0609. Copies of the submission, all subsequent amendments, all written statements with respect to the proposed rule change that are filed with the Commission, and all written communications relating to the proposed rule change between the Commission and any person, other than those that may be withheld from the public in accordance with the provisions of 5 U.S.C. 552, will be available for inspection and copying in the Commission's Public Reference Room. Copies of such filing will also be available for inspection and copying at the principal office of the NASD. All submissions should refer to File No. SR–NASD–2003–44 and should be submitted by October 31, 2003.

For the Commission, by the Division of Market Regulation, pursuant to delegated authority.[13]

Margaret H. McFarland,

Deputy Secretary.

[FR Doc. 03–25795 Filed 10–9–03; 8:45 am]

BILLING CODE 8010–01–P

[9] Nasdaq has represented that, during the pendency of this rule proposal, panels have afforded issuers exceptions consistent with the proposal as filed at the time pursuant to NASD Rule 4810(b). All pending exceptions will be modified in accord with this new rule and this implementation proposal.

[10] For example, a SmallCap Market issuer that is currently in the final 90-day compliance period would be eligible to complete this 90-day compliance period, notwithstanding the fact that such period would be eliminated under the proposed rule. At the conclusion of the 90-day compliance period, the issuer would be afforded the final compliance period under the proposed rule up to its next shareholder meeting, provided it satisfied all requirements of the new rule. That is, it must satisfy all initial listing criteria, commit to seek shareholder approval at its next shareholder meeting, but in no event later than two years from the original bid price notification (nine months from the expiration of the 90-day period), and to promptly thereafter effect the reverse stock split to come into compliance with the bid price requirement.

[11] NASD Rule 4810(b) provides that Nasdaq may grant exceptions to its listing rules. As noted above, Nasdaq would be unwilling to exercise this discretion for SmallCap issuers beyond two years from the date of the original bid price deficiency notification, absent ''extraordinary circumstances.'' Nasdaq has stated that adverse financial developments affecting the issuer would not support a finding of ''extraordinary circumstances.'' Rather, the term ''extraordinary circumstances'' is intended to refer to a *force majeure* event that makes it impossible for the issuer to avail itself of the due process afforded by the Nasdaq listing rules. *See* e-mail from Sara Bloom, Nasdaq, to Michael Gaw, Commission, dated October 2, 2003.

[12] 15 U.S.C. 78o–3(b)(6).

[13] 17 CFR 200.30–3(a)(12).

SECURITIES AND EXCHANGE COMMISSION

[Release No. 34–48583; File No. SR–OC–2003–07]

Self-Regulatory Organizations; Notice of Filing and Immediate Effectiveness of Proposed Rule Change by OneChicago, LLC To Amend Its Policy Regarding Block Trades, Pre-Execution Discussions and Cross Trades

October 1, 2003.

Pursuant to Section 19(b)(7) of the Securities Exchange Act of 1934 (''Act''),[1] and Rule 19b–7 under the Act,[2] notice is hereby given that on September 12, 2003 OneChicago, LLC (''OneChicago'') filed with the Securities and Exchange Commission (''Commission'') the proposed rule changes described in Items I, II, and III below, which Items have been prepared by OneChicago. The Commission is publishing this notice to solicit comments on the proposed rule change from interested persons. On September 11, 2003, OneChicago filed a written certification under Section 5c(c) of the Commodity Exchange Act (''CEA'')[3] with the Commodity Futures Trading Commission (''CFTC'').

I. Self-Regulatory Organization's Description of the Proposed Rule Change

OneChicago is proposing to amend its policy regarding block trades, pre-execution discussions and cross trades. The text of the proposed rule change

[1] 15 U.S.C. 78s(b)(7).

[2] 17 CFR 240.19b–7.

[3] 7 U.S.C. 7a–2(c).

appears below. New text is in *italics*; deleted text is in [brackets].

* * * * *

OneChicago Policies:

Block Trades, *Pre-Execution Discussions* and Cross Trades

Block Trade*s* [Policy]

Pursuant to OneChicago Rule 417[(a)(i)(B)], the Exchange permits *eligible contract participants, See Rule 417(a), to execute* block trades [to be executed] away from the public auction market in privately negotiated transactions for a minimum of 500 contracts per transaction.

Each firm executing a side of a block trade must have at least one designated person pre-authorized to report block trades. Only OneChicago member firms with a clearing relationship at The Options Clearing Corporation or the Chicago Mercantile Exchange Clearing Division will be allowed to report a block trade.

The seller is obligated to call OneChicago Operations Management (''OOM'') without delay after the trade is negotiated to notify the Exchange of the basic terms of the trade, including the contract, price, quantity and contra-party information. *If the transaction is a spread or combination, such as when one party is rolling a position into the next contract month,*[1] *the seller of the month closest to expiration is responsible for reporting the entire transaction.* OOM will provide the caller a Trade Identification (''Trade ID'') for the block trade and report both sides of the trade to the OneChicago trade engine. The trade engine will then relay the block trade terms to the Chicago Board Options Exchange Financial Network (''CFN''), which serves as the OneChicago price distribution mechanism, and [to]OneChicago's matched trade database. After reporting the trade to OOM, the buyer and seller must each complete and transmit the prescribed Block Trade Reporting form via facsimile or e-mail to the OOM Help Desk. Both sides must include the Trade ID given by the OOM Help Desk to the seller at the time of his call. It is the responsibility of the buying and selling firms to effect any subsequent allocations or necessary updates to non-critical matching fields utilizing their chosen post-trade processing system.

To protect market integrity during the negotiation and reporting period, any party with knowledge of the pending block trade is prohibited from entering offsetting orders in the specific or any related OneChicago product for the benefit of the account or accounts related to a party to the block trade until the block trade has been reported to and disseminated by CFN. Additionally, no party with knowledge of the pending block trade report is allowed to exercise discretion by withholding (or placing) orders for any account that would have (or would not have) been placed given knowledge of the pending block trade until the block trade has been reported to and disseminated by the CFN price distribution mechanism. Parties subject to the jurisdiction of a member or an affiliate of the Intermarket Surveillance Group (''*ISG*'') are further prohibited from submitting related offsetting orders on OneChicago if they utilize block trade reporting facilities of any other ISG participant exchange until such trades have been disseminated to the marketplace via the standard public reporting mechanism for that exchange. OneChicago considers busting block trades to be a serious matter and may deny a bust request based on the factors surrounding the request, including but not limited to the market impact of the original report, the amount of variation between the block trade price and the market price at the time of the report and the length of time transpiring since the block trade was reported to the public. Fees will be levied for busting a block trade.

Any attempt to circumvent this policy or misrepresent a transaction as a block trade will be forwarded to the appropriate party for investigation.

Pre-Execution Discussions

In accordance with OneChicago Rule 614, the Exchange permits Members and Access Persons to engage in pre-execution discussions pursuant to which one party may agree in advance to take the opposite side of the other party's order for a transaction to be executed on the Exchange, on the following conditions:

1. *Customers of each such party must consent to allow pre-execution discussions with other market participants;*

2. *Any Member or Access Person who is solicited to participate in a OneChicago transaction through pre-execution discussions shall not (i) disclose to any other party the details of such discussions or (ii) enter an order or quote through the Exchange to take advantage of information conveyed during such discussions unless such Member or Access Person has agreed during the pre-execution discussions to participate in the transaction in accordance with this policy and the order or quote is entered to implement that agreement; and*

3. *Except for block trades conducted pursuant to Rule 417 and exchange of future for physical transactions conducted pursuant to Rule 416, a period of four seconds shall elapse between entering the first order or quote and entering the second order for the opposite side. The order or quote initially entered may be filled or lifted by a third party during the four-second waiting period rather than consummating the transaction with the intended party as contemplated by the pre-execution discussions.*

Cross Trades

[Pursuant to]*In accordance with OneChicago* Rule*s* 409 *and 610*, a Member [of the Exchange]may cross orders, provided that the Member [exposes] *enters* one side of the trade [(buy or sell) to OneChicago's central order book for a minimum of]*(which shall be the Customer's side in the event that the Member or its affiliate is taking the other side) into OneChicago's trading system at least* four seconds before entering *the order for* the opposite side.

* * * * *

II. Self-Regulatory Organization's Statement of the Purpose of, and Statutory Basis for, the Proposed Rule Change

OneChicago has prepared statements concerning the purpose of, and basis for, the proposed rule change, burdens on competition, and comments received from members, participants, and others. The text of these statements may be examined at the places specified in Item IV below. These statements are set forth in Sections A, B, and C below.

A. Self-Regulatory Organization's Statement of the Purpose of, and Statutory Basis for, the Proposed Rule Change

1. Purpose

OneChicago is proposing to amend its current policy regarding block trades and cross trades and to add a new provision that explicitly permits pre-execution discussions. The substantive changes in the proposed rule change are the following: To amend the reporting requirements for block trades to require the seller of the front month of a block spread or combination transaction to report the entire transaction; to explicitly permit OneChicago members and access persons to enter into pre-execution discussions with other market participants when certain conditions are

[1] *For purposes of this policy, the total quantity of the legs of a spread or a combination must meet the 500 minimum contracts requirement.*

met; and to clarify that OneChicago members entering into cross trades in which the member or affiliate of the member is taking the opposite side of a customer order must expose the customer side of the trade on the OneChicago trading system for at least four seconds.

OneChicago's block trade policy currently requires the seller of the block trade to call OneChicago Operations Management (''OOM'') to report the block transaction. Under the proposed rule change, if a block trade were a spread or a combination, the seller of the month closest to expiration would be required to report the entire transaction. For example, if the block were comprised of 250 Sep'03 Microsoft contracts and 250 Dec'03 Microsoft contracts, then the seller of the Sep'03 Microsoft contracts would report the entire block transaction to OOM, both the Sep'03 Microsoft contracts and the Dec'03 Microsoft contracts. In addition, the proposed rule change clarifies that the total quantity of the legs of a spread or combination must meet the 500 minimum contracts requirement.

Furthermore, the proposed rule change would add a new provision regarding pre-execution discussions. This provision would explicitly permit OneChicago members and access persons [4] to engage in pre-execution discussions pursuant to which one party may agree in advance to take the opposite side of the other party's order if the following conditions are met:

1. Customers of each party must consent to allow pre-execution discussions with other market participants;

2. Any OneChicago member or access person who is solicited to participate in a OneChicago transaction through pre-execution discussions shall not: (i) Disclose to any other party the details of such discussions or (ii) enter an order or quote through the Exchange to take advantage of information conveyed during such discussions, unless such member or access person has agreed during the pre-execution discussions to participate in the transaction in accordance with this policy, and the order or quote is entered to implement that agreement; and

3. Except for block trades conducted pursuant to OneChicago Rule 417 and exchange of future for physical transactions conducted pursuant to OneChicago Rule 416, a period of four seconds must elapse between entering the first order or quote and entering the second order for the opposite side. The order or quote initially entered may be filled or lifted by a third party during the four-second waiting period rather than consummating the transaction with the intended party as contemplated by the pre-execution discussion.

The proposed rule change would also amend the provision relating to cross trades to clarify that if a member is taking the other side of its customer's order, the customer side of the order must be entered into the OneChicago trading system for at least four seconds before the member may take the opposite side.

2. Statutory Basis

OneChicago believes that the proposed rule change is consistent with Section 6(b)(5) of the Act [5] in that it is reasonably designed to prevent fraudulent and manipulative acts and practices and to promote just and equitable principles of trade. The proposed rule change is also designed to protect investors and the public interest by requiring certain conditions to be met in order for a member or access person to enter into pre-execution discussions with other market participants. The proposed cross trade amendments are also designed to protect investors and the public interest by requiring that the customer side of a cross trade be entered into OneChicago's trading system for at least four seconds before members may take the other side of the customer's order.

B. Self-Regulatory Organization's Statement on Burden on Competition

OneChicago does not believe that the proposed rule change will have a negative impact on competition.

C. Self-Regulatory Organization's Statement of Comments on the Proposed Rule Change Received From Members, Participants, or Others

Comments on OneChicago's proposed rule change have not been solicited, and none have been received.

III. Date of Effectiveness of the Proposed Rule Change and Timing for Commission Action

The proposed rule change has become effective on September 12, 2003. Within 60 days of the date of effectiveness of the proposed rule change, the Commission, after consultation with the CFTC, may summarily abrogate the proposed rule change and require that the proposed rule change be refiled in accordance with the provisions of Section 19(b)(1) of the Act.[6]

IV. Solicitation of Comments

Interested persons are invited to submit written data, views and arguments concerning the foregoing, including whether the proposed rule change, as amended, conflicts with the Act. Persons making written submissions should file nine copies of the submission with the Secretary, Securities and Exchange Commission, 450 Fifth Street, NW., Washington, DC 20549–0609. Comments also may be submitted electronically to the following e-mail address: *rule-comments@sec.gov.* Copies of the submission, all subsequent amendments, all written statements with respect to the proposed rule change that are filed with the Commission, and all written communications relating to the proposed rule change between the Commission and any person, other than those that may be withheld from the public in accordance with the provisions of 5 U.S.C. 552, will be available for inspection and copying in the Commission's Public Reference Room. Copies of these filings also will be available for inspection and copying at the principal office of OneChicago. All submissions should refer to File No. SR–OC–2003–07 and should be submitted by October 31, 2003.

For the Commission, by the Division of Market Regulation, pursuant to delegated authority.[7]

Margaret H. McFarland,

Deputy Secretary.

[FR Doc. 03–25794 Filed 10–9–03; 8:45 am]

BILLING CODE 8010–01–P

[4] Under OneChicago Rule 101, an access person means any person, other than a clearing member or Exchange member or related party of either, who has been given access to the OneChicago System through a OneChicago workstation by a clearing member.

[5] 15 U.S.C. 78f(b)(5).

[6] 15 U.S.C. 78s(b)(1).

[7] 17 CFR 200.30–3(a)(75).

SMALL BUSINESS ADMINISTRATION

[Declaration of Disaster #3546]

Commonwealth of Virginia (Amendment #3)

In accordance with a notice received from the Department of Homeland Security—Federal Emergency Management Agency, effective October 1, 2003, the above numbered declaration is hereby amended to establish the incident period for this disaster as beginning on September 18, 2003 and continuing through October 1, 2003.

All other information remains the same, *i.e.*, the deadline for filing applications for physical damage is

November 17, 2003, and for economic injury the deadline is June 18, 2004.

(Catalog of Federal Domestic Assistance Program Nos. 59002 and 59008).

Dated: October 6, 2003.

Herbert L. Mitchell,

Associate Administrator for Disaster Assistance.

[FR Doc. 03–25756 Filed 10–9–03; 8:45 am]

BILLING CODE 8025–01–P

SMALL BUSINESS ADMINISTRATION

[Declaration of Disaster #P017]

State of West Virginia (Amendment #1)

In accordance with a notice received from the Department of Homeland Security—Federal Emergency Management Agency, effective September 30, 2003, the above numbered declaration is hereby amended to establish the incident period for this disaster as beginning on September 18, 2003 and continuing through September 30, 2003.

All other information remains the same, *i.e.*, the deadline for filing applications for physical damage is November 24, 2003.

(Catalog of Federal Domestic Assistance Program Nos. 59008)

Dated: October 6, 2003.

Herbert L. Mitchell,

Associate Administrator for Disaster Assistance.

[FR Doc. 03–25757 Filed 10–9–03; 8:45 am]

BILLING CODE 8025–01–P

SMALL BUSINESS ADMINISTRATION

Public Federal Regulatory Enforcement Fairness Hearing; Small Business Administration Region III Regulatory Fairness Board

The Small Business Administration Region III Regulatory Fairness Board and the SBA Office of the National Ombudsman will hold a Public Hearing on Tuesday, October 28, 2003 at 1:00 p.m. at Delaware Biotech Institute (Delaware Technology Park), 15 Innovation Way, Newark, DE 19711, to receive comments and testimony from small business owners, small government entities, and small non-profit organizations concerning regulatory enforcement and compliance actions taken by federal agencies.

Anyone wishing to attend or to make a presentation must contact Jayne E. Armstrong in writing or by fax, in order to be put on the agenda. Jayne E. Armstrong, District Director, Delaware District Office, 824 North Market Street, Suite 610, Wilmington, DE 19801, phone (302) 573–6382, fax (303) 573–6060, e-mail: *jayne.armstrong@sba.gov.*

For more information, see our Web site at *http://www.sba.gov/ombudsman.*

Dated: October 7, 2003.

Peter Sorum,

National Ombudsman (Acting).

[FR Doc. 03–25755 Filed 10–9–03; 8:45 am]

BILLING CODE 8025–01–P

DEPARTMENT OF STATE

[Public Notice 4512]

Amendment of Certain Designations Pursuant to Section 1(b) of Executive Order 13224

Acting under the authority of section 1(b) of Executive Order 13224 of September 23, 2001, as amended by Executive Order 13286 of July 2, 2002, and Executive Order 13284 of January 23, 2003, and in consultation with the Secretary of the Treasury, the Attorney General, and the Secretary of Homeland Security, I hereby determine that the organizations listed below use or have used as aliases the additional names indicated below. I hereby amend the designations of these organizations to add the following names as aliases:

Basque Fatherland and Liberty (designated on October 31, 2001)
a.k.a. Ekin
a.k.a. K.A.S.
a.k.a. Xaki
a.k.a. Jarrai-Haika-Segi
a.k.a. Askatasuna

Harakat ul-Mujahideen (designated on September 23, 2001)
a.k.a. Jamiat ul-Ansar

Kahane Chai (designated on October 31, 2001)
a.k.a. New Kach Movement
a.k.a. newkach.org
a.k.a. Kahane
a.k.a. Yeshivat HaRav Meir
a.k.a. the International Kahane Movement
a.k.a. Kahane.org
a.k.a. Kahane.net
a.k.a. Kahanetzadak.com
a.k.a. Kahane Tzadak
a.k.a. the Hatikva Jewish Identity Center
a.k.a. the Rabbi Meir David Kahane Memorial Fund
a.k.a. Friends of the Jewish Idea Yeshiva
a.k.a. Judean Congress
a.k.a. Jewish Legion
a.k.a. The Voice of Judea
a.k.a. No'ar Meir
a.k.a. Meir's Youth
a.k.a. American Friends of Yeshivat Rav Meir
a.k.a. American Friends of the United Yeshiva Movement
a.k.a. The Committee Against Racism and Discrimination (CARD)

Mujahedin-e Khalq (designated on October 31, 2001)
a.k.a. Muslim Iranian Student's Society

Popular Front for the Liberation of Palestine (designated on October 31, 2001)
a.k.a. Martyr Abu-Ali Mustafa Battalion

Al Qaida/Islamic Army (designated on September 23, 2001)
a.k.a. Egyptian Islamic Jihad
a.k.a. al-Jihad
a.k.a. the Jihad Group
a.k.a. Egyptian al-Jihad
a.k.a. New Jihad

Revolutionary Nuclei (designated on October 31, 2001)
a.k.a. Epanastatiki Pirines

Consistent with the determination in section 10 of Executive Order 13224 that ''prior notice to persons determined to be subject to the Order who might have a constitutional presence in the United States would render ineffectual the blocking and other measures authorized in the Order because of the ability to transfer funds instantaneously,'' I determine that no prior notice need be provided to any person subject to this determination who might have a constitutional presence in the United States, because to do so would render ineffectual the measures authorized in the Order.

This notice shall be published in the **Federal Register**.

Dated: October 7, 2003.

Colin L. Powell,

Secretary of State, Department of State.

[FR Doc. 03–25889 Filed 10–9–03; 8:45 am]

BILLING CODE 4710–10–P

DEPARTMENT OF STATE

[Public Notice 4511]

Amendment of Certain Designations Pursuant to Section 1(a)(ii)(A) of Executive Order 12947

Acting under the authority of section 1(a)(ii)(A) of Executive Order 12947 of January 23, 1995, as amended by Executive Order 13099 of August 20, 1998, and in consultation with the Secretary of the Treasury and the Attorney General, I hereby determine that the organizations listed below use or have used as aliases the additional names indicated below. I hereby amend the designations of these organizations to add the following names as aliases:

Kahane Chai (designated on January 23, 1995)
Also known as Kach
Also known as Kahane Lives

Also known as the Kfar Tapuah Fund
Also known as The Judean Voice
Also known as The Judean Legion
Also known as The Way of the Torah
Also known as The Yeshiva of the Jewish Idea
Also known as the Repression of Traitors
Also known as Dikuy Bogdim
Also known as DOV
Also known as the State of Judea
Also known as the Committee for the Safety of the Roads
Also known as the Sword of David
Also known as Judea Police
Also known as Forefront of the Idea
Also known as The Qomemiyut Movement
Also known as KOACH
Also known as New Kach Movement
Also known as newkach.org
Also known as Kahane
Also known as Yeshivat HaRav Meir
Also known as the International Kahane Movement
Also known as Kahane.org
Also known as Kahane.net
Also known as Kahanetzadak.com
Also known as Kahane Tzadak
Also known as the Hatikva Jewish Identity Center
Also known as the Rabbi Meir David Kahane Memorial Fund
Also known as Friends of the Jewish Idea Yeshiva
Also known as Judean Congress
Also known as Jewish Legion
Also known as The Voice of Judea
Also known as No'ar Meir
Also known as Meir's Youth
Also known as American Friends of Yeshivat Rav Meir
Also known as American Friends of the United Yeshiva Movement
Also known as The Committee Against Racism and Discrimination (CARD)
Popular Front for the Liberation of Palestine (designated on January 23, 1995)
Also known as the Red Eagles
Also known as the Red Eagle Group
Also known as the Red Eagle Gang
Also known as the Halhul Gang
Also known as the Halhul Squad
Also known as Palestinian Popular Resistance Forces
Also known as PPRF
Also known as Martyr Abu-Ali Mustafa Battalion
Islamic Army (designated on August 20, 1998)
Also known as al Qaeda
Also known as ''the Base''
Also known as the Usama Bin Laden Network
Also known as the Usama Bin Laden Organization
Also known as Egyptian Islamic Jihad
Also known as al-Jihad
Also known as the Jihad Group
Also known as Egyptian al-Jihad
Also known as New Jihad

I determine that no prior notice need be provided to any person subject to this determination who might have a constitutional presence in the United States, because to do so would render ineffectual the measures authorized in the Order.

This notice shall be published in the **Federal Register**.

Dated: October 7, 2003.

Colin L. Powell,

Secretary of State, Department of State.

[FR Doc. 03–25888 Filed 10–9–03; 8:45 am]

BILLING CODE 4710–10–P

DEPARTMENT OF STATE

[Public Notice 4509]

Bureau of Educational and Cultural Affairs Request for Grant Proposals: Partnerships for Learning Undergraduate Studies Program

ACTION: Notice.

SUMMARY: The Office of Academic Exchange Programs of the Bureau of Educational and Cultural Affairs announces an open competition for Partnerships for Learning Undergraduate Studies (PLUS) Program. Public and private non-profit organizations with at least four years of experience in conducting international exchange programs and meeting the provisions described in Internal Revenue Code section 26 USC 501(c)(3) may submit proposals to provide administrative and program support services for the PLUS Scholarship Program.

Program Information

Overview: Under the Partnerships for Learning Initiative, the Bureau created the Partnerships for Learning Undergraduate Studies (PLUS) Program in order to reach a broader sector of college-age youth (generally, 17–22 years of age) from diverse backgrounds and provide them with a greater understanding of U.S. institutions, society and culture. The goal of the PLUS Program is to identify and support undergraduate level study at accredited higher education institutions in the United States for a select cadre of academically talented undergraduate students from the Middle East and North Africa who exhibit leadership potential in contributing to the economic, political and social development of the region. PLUS scholarships are offered for the final two years of undergraduate level study in the social sciences and humanities, with the provision of pre-academic training to develop participant academic readiness and English-language abilities. (The pre-academic training program is detailed under a separate Request for Grant Proposals solicitation.) The program participants should be placed in clusters. In general five to ten participants may be placed in a single institution. In negotiation with the host institution, the cooperating agency needs to develop opportunities for students to receive a U.S. degree upon successful completion of the course of work and other requirements.

The Bureau's Office of Academic Exchange Programs administers the PLUS Program and is responsible for allocation of funding, policy guidance and administrative oversight. Program participants are recruited, screened and nominated by America-Mideast Educational and Training Services (Amideast) and/or Public Affairs Sections of the U.S. Embassies or Fulbright Commissions in the region. Final selection of grantees is determined by an independent review panel in Washington, DC.

The successful applicant will have responsibility for program administration, which involves performance of services in the following broad categories: Program Planning and Management; Placement; Supervision and Support Services; Special Programs Management; Fiscal Management; and Program Projection, Reporting, Alumni Follow-on and Evaluation Services.

Guidelines: Program administration activities should cover the time period January 15, 2004 through August 30, 2006. The expected grantee caseload is projected to be 75–100 principal candidates for academic years 2004–2005 and 2005–2006. Programs must comply with J–1 visa regulations. Please refer to Solicitation Package for further information.

Budget Guidelines

The Bureau anticipates awarding one grant in the amount up to $3,650,000 to support program and administrative costs required to implement this phase of the PLUS Program. Bureau grant guidelines require that organizations with less than four years experience in conducting international exchanges be limited to $60,000 in Bureau funding. Therefore, organizations with less than four years experience in conducting international exchanges are ineligible to apply under this competition. The Bureau encourages applicants to provide maximum levels of cost-sharing and funding in support of its programs.

Applicants must submit a comprehensive budget for the entire program. There must be a summary budget as well as breakdowns reflecting both administrative and program budgets. Applicants may provide separate sub-budgets for each program component, phase, location, or activity to provide clarification.

Please refer to the Solicitation Package for complete budget guidelines and formatting instructions.

Announcement Title and Number: All correspondence with the Bureau concerning this RFGP should reference the above title and number ECA/A/E/NEA–SA–04–PLUS.

FOR FURTHER INFORMATION CONTACT: The Office of Academic Exchanges, ECA/A/E/NEA–SA, Room 212, U.S. Department of State, 301 4th Street, SW., Washington, DC 20547, telephone (202) 619–6863, fax (202) 205–2466, or Internet address *aarmitag@pd.state.gov* to request a Solicitation Package. The Solicitation Package contains detailed award criteria, required application forms, specific budget instructions, and standard guidelines for proposal preparation. Please specify Bureau Program Officer Alice Armitage on all other inquiries and correspondence.

Please read the complete **Federal Register** announcement before sending inquiries or submitting proposals. Once the RFGP deadline has passed, Bureau staff may not discuss this competition with applicants until the proposal review process has been completed.

To Download a Solicitation Package Via Internet

The entire Solicitation Package may be downloaded from the Bureau's Web site at *http://exchanges.state.gov/education/RFGPs.* Please read all information before downloading.

New OMB Requirement

An OMB policy directive published in the **Federal Register** on Friday, June 27, 2003, requires that all organizations applying for Federal grants or cooperative agreements must provide a Dun and Bradstreet (D&B) Data Universal Numbering System (DUNS) number when applying for all Federal grants or cooperative agreements on or after October 1, 2003. The complete OMB policy directive can be referenced at *http://www.whitehouse.gov/omb/fedreg/062703_grant_identifier.pdf.* Please also visit the ECA Web site at *http://exchanges.state.gov/education/rfgps/menu.htm* for additional information on how to comply with this new directive.

Deadline for Proposals

All proposal copies must be received at the Bureau of Educational and Cultural Affairs by 5 p.m. Washington, DC time on Friday, November 14, 2003. Faxed documents will not be accepted at any time. Documents postmarked the due date but received on a later date will not be accepted. Each applicant must ensure that the proposals are received by the above deadline.

Applicants must follow all instructions in the Solicitation Package. The original and seven copies of the application should be sent to: U.S. Department of State, Bureau of Educational and Cultural Affairs, Ref.: ECA/A/E/NEA–SA–04–PLUS, Program Management, ECA/EX/PM, SA–44, Room 534, 301 4th Street, SW., Washington, DC 20547.

Please note that proposals must be sent by U.S. mail or other recognized national delivery services that utilize a shipping identification and tracking process and whose delivery people are identifiable by commonly recognized uniforms and delivery vehicles. If applicants wish to send staff to hand-carry proposals, they must contact the ECA program officer, Alice Armitage at 202–619–6863 to set up an appointment for delivery prior to 5 p.m. November 14.

Applicants must also submit the ''Executive Summary'' and ''Proposal Narrative'' sections of the proposal in text (.txt) format on a PC-formatted disk. The Bureau will transmit these files electronically to the Public Affairs section at the U.S. Embassy for its review, with the goal of reducing the time it takes to get embassy comments for the Bureau's grants review process.

Diversity, Freedom and Democracy Guidelines

Pursuant to the Bureau's authorizing legislation, programs must maintain a non-political character and should be balanced and representative of the diversity of American political, social, and cultural life. ''Diversity'' should be interpreted in the broadest sense and encompass differences including, but not limited to ethnicity, race, gender, religion, geographic location, socio-economic status, and physical challenges. Applicants are strongly encouraged to adhere to the advancement of this principle both in program administration and in program content. Please refer to the review criteria under the 'Support for Diversity' section for specific suggestions on incorporating diversity into the total proposal. Public Law 104–319 provides that ''in carrying out programs of educational and cultural exchange in countries whose people do not fully enjoy freedom and democracy,'' the Bureau ''shall take appropriate steps to provide opportunities for participation in such programs to human rights and democracy leaders of such countries.'' Public Law 106–113 requires that the governments of the countries described above do not have inappropriate influence in the selection process. Proposals should reflect advancement of these goals in their program contents, to the full extent deemed feasible.

Adherence to All Regulations Governing the J Visa

The Bureau of Educational and Cultural Affairs is placing renewed emphasis on the secure and proper administration of Exchange Visitor (J visa) Programs and adherence by grantees and sponsors to all regulations governing the J visa. Therefore proposals should demonstrate the applicant's capacity to meet all requirements governing the administration of Exchange Visitor Programs as set forth in 22 CFR part 62, including the oversight of Responsible Officers and Alternate Responsible Officers, screening and Selection of program participants, provision of pre-arrival information and orientation to participants, monitoring of participants, proper maintenance and security of forms, record-keeping, reporting and other requirements. The Grantee will be responsible for issuing DS–2019 forms to participants in this program.

A copy of the complete regulations governing the administration of Exchange Visitor (J) programs is available at *http://exchanges.state.gov* or from: United States Department of State, Office of Exchange Coordination and Designation, ECA/EC/ECD — SA–44, Room 734, 301 4th Street, SW., Washington,DC 20547, Telephone: (202) 401–9810, FAX: (202) 401–9809.

Review Process

The Bureau will acknowledge receipt of all proposals and will review them for technical eligibility. Proposals will be deemed ineligible if they do not fully adhere to the guidelines stated herein and in the Solicitation Package. All eligible proposals will be reviewed by the program office, as well as the Public Diplomacy section overseas, where appropriate. Eligible proposals will be subject to compliance with Federal and Bureau regulations and guidelines and forwarded to Bureau grant panels for advisory review. Proposals may also be reviewed by the Office of the Legal Adviser or by other Department elements. Final funding decisions are at

the discretion of the Department of State's Assistant Secretary for Educational and Cultural Affairs. Final technical authority for cooperative agreements resides with the Bureau's Grants Officer.

Review Criteria

Technically eligible applications will be competitively reviewed according to the criteria stated below. These criteria are not rank ordered and all carry equal weight in the proposal evaluation:

1. *Program Development and Management:* Proposals should exhibit originality, substance, precision, innovation, and relevance to the Bureau's mission.

2. *Program planning:* Detailed agenda and relevant work plan should demonstrate substantive undertakings and logistical capacity. Agenda and plan should adhere to the program overview and guidelines described above.

3. *Ability to achieve program objectives:* Objectives should be reasonable, feasible, and flexible. Proposals should clearly demonstrate how the institution will meet the program's objectives and plan.

4. *Support of Diversity:* Proposals should demonstrate substantive support of the Bureau's policy on diversity. Achievable and relevant features should be cited in both program administration and program content.

5. *Institutional Capacity:* Proposed personnel and institutional resources should be adequate and appropriate to achieve the program or project's goals.

6. *Institution's Record/Ability:* Proposals should demonstrate an institutional record of successful exchange programs, including responsible fiscal management and full compliance with all reporting requirements for past Bureau grants as determined by Bureau Grant Staff. The Bureau will consider the past performance of prior recipients and the demonstrated potential of new applicants.

7. *Project Evaluation:* Proposals should include a plan to evaluate the activity's success, both as the activities unfold and at the end of the program. A draft survey questionnaire or other technique plus description of a methodology to use to link outcomes to original project objectives is recommended. Successful applicants will be expected to submit intermediate reports after each project component is concluded or quarterly, whichever is less frequent.

8. *Cost-effectiveness:* The overhead and administrative components of the proposal, including salaries and honoraria, should be kept as low as possible. All other items should be necessary and appropriate.

9. *Cost-sharing:* Proposals should maximize cost-sharing through other private sector support as well as institutional direct funding contributions.

10. *Value to U.S.-Partner Country Relations:* Proposed projects should receive positive assessments by the U.S. Department of State's geographic area desk and overseas officers of program need, potential impact, and significance in the partner country(ies).

Authority

Overall grant making authority for this program is contained in the Mutual Educational and Cultural Exchange Act of 1961, Public Law 87–256, as amended, also known as the Fulbright-Hays Act. The purpose of the Act is ''to enable the Government of the United States to increase mutual understanding between the people of the United States and the people of other countries * * *; to strengthen the ties which unite us with other nations by demonstrating the educational and cultural interests, developments, and achievements of the people of the United States and other nations * * * and thus to assist in the development of friendly, sympathetic and peaceful relations between the United States and the other countries of the world.'' The funding authority for the program above is provided through legislation.

Notice

The terms and conditions published in this RFGP are binding and may not be modified by any Bureau representative. Explanatory information provided by the Bureau that contradicts published language will not be binding. Issuance of the RFGP does not constitute an award commitment on the part of the Government. The Bureau reserves the right to reduce, revise, or increase proposal budgets in accordance with the needs of the program and the availability of funds. Awards made will be subject to periodic reporting and evaluation requirements.

Notification

Final awards cannot be made until funds have been appropriated by Congress, allocated and committed through internal Bureau procedures.

Dated: October 6, 2003.

C. Miller Crouch,

Principal Deputy Assistant Secretary, Bureau of Educational and Cultural Affairs, Department of State.

[FR Doc. 03–25783 Filed 10–9–03; 8:45 am]

BILLING CODE 4710–05–P

DEPARTMENT OF STATE

[Public Notice 4510]

Bureau of Educational and Cultural Affairs Request for Grant Proposals: Pre-Academic English Language Training and Academic Readiness Phase of the Partnership for Learning Undergraduate Studies PLUS Program

ACTION: Notice.

SUMMARY: The Office of English Language Programs of the Bureau of Educational and Cultural Affairs announces an open competition for the Pre-Academic English Language Training and Academic Readiness phase of the ECA Partnership for Learning Undergraduate Studies (PLUS) Program. Public and private non-profit organizations meeting the provisions described in Internal Revenue Code section 26 U.S.C. 501(c)(3) may submit proposals to provide administrative and program support services for placing between 75 and 100 undergraduate students from the Middle East and North Africa in groups of no more than 14 students in appropriate United States Intensive English Programs (IEPs). These IEPs should be associated with U.S. colleges and universities offering a pre-academic program of intensive English language instruction, academic readiness, and acculturation to life and study in the United States. It is anticipated that most of the students will begin their pre-academic programs in January 2004 or the spring semester of the institution's academic calendar.

Program Information

Overview: The Partnership for Learning Undergraduate Studies (PLUS) Program of the ECA Partnership for Learning Initiative seeks to reach a broad sector of college-age youth (17–22) from diverse backgrounds, provide them with a greater understanding of U.S. institutions, society and culture, and build leadership for the region through education.

The goal of the PLUS scholarship program is to identify and support undergraduate level study at accredited higher education institutions in the United States for a select cadre of academically talented undergraduate students from the Middle East and North Africa who exhibit leadership potential in contributing to the economic, political, and social development of the region.

PLUS scholarships are offered for the final two years of undergraduate level study leading to a bachelor's degree in the social sciences and humanities. When necessary, the program will also

provide up to eight months of pre-academic training to develop English language proficiency and participant academic readiness. The two-year Partnership for Learning Undergraduate Studies (PLUS) Program has been announced under a separate Request for Grant Proposals.

Program participants will be recruited, screened and nominated by America-Mideast Educational and Training Services (AMIDEAST) in conjunction with Public Affairs Sections of the U.S. Embassies and/or Fulbright Commissions in the region. An independent review panel in Washington, DC, will determine final selection of scholarship grantees. Participants will be placed in pre-academic programs as determined necessary in the selection process.

The Bureau's Office of English Language Programs administers this first phase of the PLUS Scholarship Program, and is responsible for allocation of funding, policy guidance and administrative oversight.

The cooperating agency will have responsibility for program administration, which involves performance of services in the following broad categories: Program Planning and Management; Placement; Supervision and Support Services; Fiscal Management; and Reporting and Evaluation Services.

Guidelines: It is anticipated that program administration activities will cover the time period December 15, 2003, through August 30, 2004. The expected cooperating agency caseload is projected to be between 75 and 100 candidates for spring 2004 and summer 2004 pre-academic programs. The cooperating agency will be responsible for the following:

(1) Identify up to 10 U.S. institutions of higher education which have Intensive English Programs that also provide activities for acculturation to life and study in the U.S. These institutions should be geographically widespread and represent the diversity of higher education in the U.S. The cooperating agency should work with the Bureau in the final selection process of these institutions.

(2) Negotiate placement into the program for the candidates and arrange scholarships or reductions of tuition or other fees when possible to leverage U.S. government funds and increase the number of participants. Negotiate on-campus housing to include, whenever possible, English-speaking roommate(s), meal plans, types and costs. Assess the availability and nature of acculturation programs including possible home hospitality or weekend and holiday visits with American families.

(3) In conjunction with the U.S. Embassy, arrange travel for the candidates from their home countries to the location of the U.S. institution in accordance with the ''Fly-America Act.'' ECA intends to issue the necessary DS–2019 forms and work with the U.S. embassies to secure visas for the candidates.

(4) Transfer grant funds to the respective host institutions for the students' tuition, accommodations, food, and incidentals.

(5) Enroll candidates in the Bureau's Health and Accident Insurance Program (ASPE).

(6) Monitor program and participants.

(7) Track, audit, and disburse PLUS Scholarship Program Funds.

Budget Guidelines

The Bureau anticipates awarding one grant, in an amount up to $1,150,000 to support program and administrative costs required to implement phase one of the PLUS Program. Bureau grant guidelines require that organizations with fewer than four years experience in conducting international exchanges be limited to $60,000 in Bureau funding. As it is expected that the budget for this program will exceed $60,000, organizations that cannot demonstrate at least four years experience will not be eligible to apply under this competition. The Bureau encourages applicants to provide maximum levels of cost-sharing and funding in management of programs.

Applicants must submit a comprehensive budget for the entire program. There must be a summary budget as well as breakdowns reflecting both administrative and program budgets. Applicants may provide separate sub-budgets for each program component, phase, location, or activity to provide clarification.

Allowable costs for the program include the following:

(1) Per participant: Expenses for a spring semester and full summer sessions as deemed necessary by the selection process including:

i. tuition and fees,

ii. books and educational materials,

iii. on-campus housing with English-speaking roommate(s),

iv. access to a comprehensive meal plan,

v. maintenance allowance,

vi. extra curricular acculturation programs. It is anticipated that total expenses will range from $12,500 to $16,000 per participant, depending on the institution and the amount of cost sharing negotiated.

(2) Round Trip Air Travel from home country to site of U.S. institution.

Please refer to the Solicitation Package for complete budget guidelines and formatting instructions.

Announcement Title and Number: All correspondence with the Bureau concerning this RFGP should reference the above title and number ECA/A/L–04–02.

FOR FURTHER INFORMATION CONTACT: The Office of English Language Programs, ECA/A/L, Room 304, U.S. Department of State, SA–44, 301 4th Street, SW, Washington, DC 20547; Phone: (202) 619–5886; Fax: (202) 401–1250; E-mail: *kmjenson@pd.state.gov*; or Internet address: *http://exchanges.state.gov/education/RFGPs* to request a Solicitation Package. The Solicitation Package contains detailed award criteria, required application forms, specific budget instructions, and standard guidelines for proposal preparation. Please specify Bureau Program Officer Kenneth M. Jenson for all other inquiries and correspondence.

Please read the complete **Federal Register** announcement before sending inquiries or submitting proposals. Once the RFGP deadline has passed, Bureau staff may not discuss this competition with applicants until the proposal review process has been completed.

To Download a Solicitation Package Via Internet

The entire Solicitation Package may be downloaded from the Bureau's Web site at *http://exchanges.state.gov/education/RFGPs*. Please read all information before downloading.

New OMB Requirement

An OMB policy directive published in the **Federal Register** on Friday, June 27, 2003, requires that all organizations applying for Federal grants or cooperating agreements must provide a Dun and Bradstreet (D&B) Data Universal Numbering System (DUNS) number when applying for all Federal grants or cooperating agreements on or after October 1, 2003. The complete OMB policy directive can be referenced at *http://www.whitehouse.gov/omb/fedreg/062703_grant_identifier.pdf.*

Please also visit the ECA Web site at *http://exchanges.state.gov/education/rfgps/menu.htm* for additional information on how to comply with this new directive.

Deadline for Proposals

All proposal copies must be received at the Bureau of Educational and Cultural Affairs by 5 p.m. Washington, DC time on Monday, November 10, 2003. Faxed documents will not be

accepted at any time. Documents postmarked the due date but received on a later date will not be accepted. Each applicant must ensure that the proposals are received by the above deadline.

Applicants must follow all instructions in the Solicitation Package. The original and seven copies of the application should be sent to: U.S. Department of State, SA–44, Bureau of Educational and Cultural Affairs, Ref.: ECA/A/L–04–02, Program Management, ECA/EX/PM, Room 534, 301 4th Street, SW, Washington, DC 20547.

Diversity, Freedom and Democracy Guidelines

Pursuant to the Bureau's authorizing legislation, programs must maintain a non-political character and should be balanced and representative of the diversity of American political, social, and cultural life. ''Diversity'' should be interpreted in the broadest sense and encompass differences including, but not limited to ethnicity, race, gender, religion, geographic location, socio-economic status, and physical challenges. Applicants are strongly encouraged to adhere to the advancement of this principle both in program administration and in program content. Please refer to the review criteria under the 'Support for Diversity' section for specific suggestions on incorporating diversity into the total proposal. Public Law 104–319 provides that ''in carrying out programs of educational and cultural exchange in countries whose people do not fully enjoy freedom and democracy,'' the Bureau ''shall take appropriate steps to provide opportunities for participation in such programs to human rights and democracy leaders of such countries.'' Public Law 106–113 requires that the governments of the countries described above do not have inappropriate influence in the selection process. Proposals should reflect advancement of these goals in their program contents, to the full extent deemed feasible.

Adherence to All Regulations Governing the J Visa

Programs must comply with J–1 visa regulations. Please refer to Solicitation Package for further information. The Bureau of Educational and Cultural Affairs is placing renewed emphasis on the secure and proper administration of Exchange Visitor (J visa) Programs and adherence by grantees and sponsors to all regulations governing the J visa. Therefore, proposals should demonstrate the applicant's capacity to meet all requirements governing the administration of Exchange Visitor Programs as set forth in 22 CFR part 62, including the oversight of Responsible Officers and Alternate Responsible Officers, screening and selection of program participants, provision of pre-arrival information and orientation to participants, monitoring of participants, proper maintenance and security of forms, record-keeping, reporting and other requirements. ECA will be responsible for issuing DS–2019 forms to participants in this program.

A copy of the complete regulations governing the administration of Exchange Visitor (J) programs is available at *http://exchanges.state.gov* or from: United States Department of State, Office of Exchange Coordination and Designation, ECA/EC/ECD—SA–44, Room 734, 301 4th Street, SW., Washington, DC 20547, Telephone: (202) 401–9810, FAX: (202) 401–9809.

Review Process

The Bureau will acknowledge receipt of all proposals and will review them for technical eligibility. Proposals will be deemed ineligible if they do not fully adhere to the guidelines stated herein and in the Solicitation Package. All eligible proposals will be reviewed by the program office, as well as the Public Diplomacy section overseas, where appropriate. Eligible proposals will be subject to compliance with Federal and Bureau regulations and guidelines and forwarded to Bureau grant panels for advisory review. Proposals may also be reviewed by the Office of the Legal Adviser or by other Department elements. Final funding decisions are at the discretion of the Department of State's Assistant Secretary for Educational and Cultural Affairs. Final technical authority for cooperating agreements resides with the Bureau's Grants Officer.

Review Criteria

Technically eligible applications will be competitively reviewed according to the criteria stated below. These criteria are not rank ordered and all carry equal weight in the proposal evaluation:

1. *Program Development and Management:* Proposals should exhibit precision and relevance to the Bureau's mission.

2. *Program planning:* Detailed agenda and relevant work plan should demonstrate the cooperating agency's logistical capacity. Agenda and plan should adhere to the program overview and guidelines described above.

3. *Ability to achieve program objectives:* Objectives should be reasonable, feasible, and flexible. Proposals should clearly demonstrate how the institution will meet the program's objectives and plan.

4. *Support of Diversity:* Proposals should demonstrate substantive support of the Bureau's policy on diversity. Achievable and relevant features should be cited in both program administration (selection of participants, program venue and program evaluation) and program content (orientation and wrap-up sessions, program meetings, resource materials and follow-up activities).

5. *Institutional Capacity:* Proposed personnel and institutional resources should be adequate and appropriate to achieve the program or project's goals.

6. *Institution's Record/Ability:* Proposals should demonstrate an institutional record of successful exchange programs, including responsible fiscal management and full compliance with all reporting requirements for past Bureau grants as determined by Bureau Grant Staff. The Bureau will consider the past performance of prior recipients and the demonstrated potential of new applicants.

7. *Project Evaluation:* Proposals should include a plan to evaluate the activity's success, both as the activities unfold and at the end of the program. A draft survey questionnaire or other technique plus description of a methodology to use to link outcomes to original project objectives is recommended. Successful applicants will be expected to submit intermediate reports after each project component is concluded or quarterly, whichever is less frequent.

8. *Cost-effectiveness:* The overhead and administrative components of the proposal, including salaries and honoraria, should be kept as low as possible. All other items should be necessary and appropriate.

9. *Cost-sharing:* Proposals should maximize cost-sharing through other private sector support as well as institutional direct funding contributions.

Authority

Overall grant making authority for this program is contained in the Mutual Educational and Cultural Exchange Act of 1961, Pub. L. 87–256, as amended, also known as the Fulbright-Hays Act. The purpose of the Act is ''to enable the Government of the United States to increase mutual understanding between the people of the United States and the people of other countries * * *; to strengthen the ties which unite us with other nations by demonstrating the educational and cultural interests, developments, and achievements of the people of the United States and other

nations * * * and thus to assist in the development of friendly, sympathetic and peaceful relations between the United States and the other countries of the world.'' The funding authority for the program above is provided through ECA's Exchanges Appropriation.

Notice

The terms and conditions published in this RFGP are binding and may not be modified by any Bureau representative. Explanatory information provided by the Bureau that contradicts published language will not be binding. Issuance of the RFGP does not constitute an award commitment on the part of the Government. The Bureau reserves the right to reduce, revise, or increase proposal budgets in accordance with the needs of the program and the availability of funds. Awards made will be subject to periodic reporting and evaluation requirements.

Notification

Final awards cannot be made until funds have been appropriated by Congress, allocated and committed through internal Bureau procedures.

Dated: October 6, 2003.

C. Miller Crouch,

Principal Deputy Assistant Secretary, Bureau of Educational and Cultural Affairs, Department of State.

[FR Doc. 03–25784 Filed 10–9–03; 8:45 am]

BILLING CODE 4710–05–P

DEPARTMENT OF STATE

[Public Notice 4486]

Bureau of Economic and Business Affairs; Advisory Committee on International Communications and Information Policy Meeting Notice

The Department of State announces that the next meeting of its Advisory Committee on International Communications and Information Policy (ACICIP) will be held on October 29, 2003 from 10 a.m. to 12 p.m. in Room 1107 of the Harry S. Truman Building of the U.S. Department of State. The Truman Building is located at 2201 C Street, NW., Washington, DC 20520.

The Committee provides a formal channel for the regular consultation and coordination on major economic, social, and legal issues and problems in international communications and information policy.

Ambassador David A. Gross, U.S. Coordinator for International Communications and Information Policy, will attend the meeting along with others from the Office of International Communications and Information Policy at the Department of State. Items on the agenda will include communications policy issues, future directions of the Committee's work, discussion regarding countries of particular interest to the ACICIP, preparations for the World Summit on the Information Society, and consultation regarding the most important emerging technologies.

Members of the public may attend the meeting up to the seating capacity of the room. While the meeting is open to the public, admittance to the Department of State building is only by means of a pre-arranged clearance list. In order to be placed on the pre-clearance list, those interested in attending must provide name, title, affiliation, social security number, date of birth and citizenship to John Finn at *finnjw@state.gov* no later than 5 p.m. on Monday, October 27. All attendees must enter by the 23rd Street Entrance. One of the following valid ID's will be required for admittance: any U.S. driver's license with photo, a passport, or a U.S. government agency ID. For security reasons, all non-U.S. government attendees must be escorted by Department of State personnel at all times when in the building.

For further information please contact John Finn, Executive Secretary of the Committee at (202) 647–5306 or at *finnjw@state.gov.*

Dated: October 3, 2003.

John W. Finn,

Executive Secretary, Advisory Committee on International Communications and Information Policy, Department of State.

[FR Doc. 03–25781 Filed 10–9–03; 8:45 am]

BILLING CODE 4710–07–P

DEPARTMENT OF STATE

[Public Notice 4485]

Advisory Panel to the United States Section of the North Pacific Anadromous Fish Commission; Notice of a Closed Meeting

The Advisory Panel to the United States Section of the North Pacific Anadromous Fish Commission will meet on October 26, 2003, at the Hawaii Convention Center in Honolulu, Hawaii. This session will involve discussion of the Eleventh Annual Meeting of the North Pacific Anadromous Fish Commission, to be held on October 26–31, 2003, in Honolulu, Hawaii. The discussion will begin at 8 a.m. and is closed to the public.

The members of the Advisory Panel will examine various options for the U.S. position at the Eleventh Annual Meeting. These considerations must necessarily involve review of sensitive matters, the premature disclosure of which would be likely to significantly frustrate implementation of proposed State Department action and U.S. participation at the Annual Meeting. Accordingly, the determination has been made to close the 8:00 a.m. meeting pursuant to section 10(d) of the Federal Advisory Committee Act and 5 U.S.C. 552(c)(9).

Requests for further information on the meeting should be directed to Dr. Dorothy Zbicz, Office of Marine Conservation (OES/OMC), Room 5806, U.S. Department of State, Washington, DC 20520–7818. Dr. Zbicz can be reached by telephone on (202) 647–3073 or by FAX (202) 736–7350.

David A. Balton,

Deputy Assistant Secretary for Oceans and Fisheries, Department of State.

[FR Doc. 03–25887 Filed 10–9–03; 8:45 am]

BILLING CODE 4710–09–P

DEPARTMENT OF TRANSPORTATION

Office of the Secretary

[Docket No. OST–2003–15623]

Notice of Request for Renewal of a Previously Approved Collection

AGENCY: Office of the Secretary (OST), DOT.

ACTION: Notice.

SUMMARY: In accordance with the Paperwork Reduction Act of 1995 (44 U.S.C. 3501 *et seq.*), this notice announces that the Information Collection Request (ICR) abstracted below has been forwarded to the Office of Management and Budget (OMB) for renewal and comment. The ICR describes the nature of the information collection and its expected cost and burden. The **Federal Register** notice with a 60-day comment period soliciting comments on the following collection of information was published on July 16, 2003 (FR Vol 68, No. 136, page 42159). No comments were received.

DATES: Comments on this notice must be received by November 10, 2003.

ADDRESSES: You may submit comments identified by DOT DMS Docket Number OST–2003–15623 by the following methods:

- Web Site: *http://dms.dot.gov.* Follow the instructions for submitting comments on the DOT electronic docket site.
- Fax 1–202–493–2251.
- *Mail:* Docket Management Facility; U.S. Department of Transportation, 400

Seventh Street, SW., Nassif Building, Room PL–401, Washington, DC 20590–001.

• *Hand Delivery:* Room PL–401 on Plaza Level of the Nassif Building, 400 Seventh Street, SW., Washington DC, between 9 a.m. and 5 p.m., Monday through Friday, except on Federal holidays.

• *Federal eRulemaking Portal:* Go to *http://www.regulations.gov.* Follow the online instructions for submitting comments.

Instructions: All submissions must include the agency name and docket number or Regulatory Identification Number (RIN) for this rulemaking. For detailed instructions on submitting comments and additional information on the rulemaking process, see the Public Participation heading of the **SUPPLEMENTARY INFORMATION** section of this document. Note that all comments received will be posted without change to *http://dms.dot.gov* including any personal information provided. Please see the Privacy Act heading under Regulatory Notes.

Docket: For access to the docket to read background documents or comments received, go to *http://dms.dot.gov* at any time or to Room PL–401 on the Plaza Level of the Nassif Building, 400 Seventh Street, SW., Washington, DC, between 9 a.m. and 5 p.m., Monday through Friday, except Federal holidays.

FOR FURTHER INFORMATION CONTACT: Delores King, Air Carrier Fitness Division (X–56), Office of Aviation Analysis, Office of the Secretary, U.S. Department of Transportation, 400 Seventh Street, SW., Washington, DC 20590, (202) 366–2343.

SUPPLEMENTARY INFORMATION:

Title: Use and Change of Names of Air Carriers, Foreign Air Charters, and Commuter. Air Carriers, 14 CFR Part 215.

OMB Control Number: 2106–0043.

Affected Public: Persons seeking to use or change the name or trade name in which they hold themselves out to the public as an air carrier or foreign air carrier.

Annual Estimated Burden: 69 hours.

Abstract: In accordance with the procedures set forth in 14 CFR part 215, before a holder of certificated, foreign, or commuter air carrier authority may hold itself out to the public in any particular name or trade name, it must register that name or trade name with the Department, and notify all other certificated, foreign, and commuter air carriers that have registered the same or similar name(s) of the intended name registration.

Comments are invited on: (a) Whether the proposed collection of information is necessary for the proper performance of the functions of the Department, including whether the information will have practical utility; (b) the accuracy of the Department's estimate of the burden of the proposed information collection; (c) ways to enhance the quality, utility and clarity of the information to be collected; and (d) ways to minimize the burden of the collection of information on respondents, including the use of automated collection techniques or other forms of information technology.

All responses to this notice will be summarized and included in the request for OMB approval.

Issued in Washington, DC on October 3, 2003.

Michael Robinson,

Information Technology Program Management, Department of Transportation.

[FR Doc. 03–25655 Filed 10–9–03; 8:45 am]

BILLING CODE 4910–62–P

DEPARTMENT OF TRANSPORTATION

Office of the Secretary

[Docket No. OST–2003–15660]

Notice of Request for Renewal of a Previously Approved Collection

AGENCY: Office of the Secretary (OST), DOT.

ACTION: Notice.

SUMMARY: In accordance with the Paperwork Reduction Act of 1995 (44 U.S.C. 3501 *et seq.*), this notice announces that the Information Collection Request (ICR) abstracted below has been forwarded to the Office of Management and Budget (OMB) for renewal and comment. The ICR describes the nature of the information collection and its expected cost and burden. The **Federal Register** notice with a 60-day comment period soliciting comments on the following collection of information was published on July 21, 2003 (FR Vol 68, No. 139, page 43,250). No comments were received.

DATES: Comments on this notice must be received by November 10, 2003.

ADDRESSES: You may submit comments identified by DOT DMS Docket Number OST 2003–15660 by the following methods:

• *Web Site: http://dms.dot.gov.* Follow the instruction for submitting comments on the DOT electronic docket site.

• Fax 1–202–493–2251.

• *Mail:* Docket Management Facility; U.S. Department of Transportation, 400 Seventh Street, SW., Nassif Building, Room PL–40, Washington, DC 20590–001.

• *Hand Delivery:* Room PL–401, on Plaza Level of the Nassif Building, 400 Seventh Street, SW., Washington DC, between 9 a.m. and 5 p.m., Monday through Friday, except on Federal holidays.

• *Federal eRulemaking Portal:* Go to *http://www.regulations.gov.* Follow the online instructions for submitting comments.

Instructions: All submissions must include the agency name and docket number or Regulatory Identification Number (RIN) for this rulemaking. For detailed instructions on submitting comments and additional information on the rulemaking process, see the Public Participation heading of the **SUPPLEMENTARY INFORMATION** section of this document. Note that all comments received will be posted without change to *http://dms.dot.gov* including any personal information provided. Please see the Privacy Act heading under Regulatory Notes.

Docket: For access to the docket to read background documents or comments received, go to *http://dms.dot.gov* at any time or to Room PL–401 on the plaza level of the Nassif Building, 400 Seventh Street, SW., Washington, between 9 a.m. and 5 p.m., Monday through Friday, except Federal holidays.

FOR FURTHER INFORMATION CONTACT: Mr. Luther Dietrich, Office of the Secretary, Office of Aviation Analysis, X–53, Department of Transportation, 400 Seventh Street, SW., Washington, DC 20590, (202) 366–1046.

SUPPLEMENTARY INFORMATION:

Title: Air Carrier's Claim for Subsidy and Air Carrier's Report of Departures Flown in Scheduled Service.

OMB Control Number: 2106–0044.

Affected Public: Small air carriers selected by the Department in docketed cases to provide subsidized essential air service.

Annual Estimated Burden: 4,176 hours.

Abstract: In 14 CFR part 271 of its Aviation Economic Regulations, the Department provided that subsidy to air carriers for providing essential air service will be paid to the carriers monthly, and that payments will vary according to the actual amount of service performed during the month. The reports of subsidized air carriers of essential air service performed on the Department's Forms 397, ''Air Carrier's Report of Departures Flown in Scheduled Service'' and 398, ''Air Carrier's Claim for Subsidy,'' establish

the fundamental basis for paying these air carriers on a timely basis. Typically, subsidized air carriers are small businesses and operate only aircraft of limited size over a limited geographical area. The collection permits subsidized air carriers to submit their monthly claims in a concise, orderly, easy-to-process form, without having to devise their own means of submitting support for these claims.

The collection involved here requests only information concerning the subsidy-eligible flights (which generally constitute only a small percentage of the carriers' total operations) of a small number of air carriers. The collection permits the Department to timely pay air carriers for providing essential air service to certain eligible communities that would not otherwise receive scheduled passenger air service.

Comments are invited on: (a) Whether the proposed collection of information is necessary for the proper functioning of the Department, including whether the information will have practical utility; (b) the accuracy of the Department's estimate of the burden of the proposed information collection; (c) ways to enhance the quality, utility, and clarity of the information to be collected; and (d) ways to minimize the burden of the collection of information on respondents, including the use of automated collection techniques or other forms of information technology.

All responses to this notice will be summarized and included in the request for OMB approval. All comments will also become a matter of public record.

Issued in Washington, DC, on October 3, 2003.

Michael Robinson,

Information Technology Program Management, Department of Transportation.

[FR Doc. 03–25656 Filed 10–9–03; 8:45 am]

BILLING CODE 4910–62–P

DEPARTMENT OF TRANSPORTATION

Office of the Secretary

Aviation Proceedings, Agreements Filed the Week Ending September 26, 2003

The following Agreements were filed with the Department of Transportation under the provisions of 49 U.S.C. 412 and 414. Answers may be filed within 21 days after the filing of the application.

Docket Number: OST–2003–16235.
Date Filed: September 25, 2003.
Parties: Members of the International Air Transport Association.
Subject:
Mail Vote 326,
Mail Vote 329,
PTC123 0255 dated 19 September 2003,
PTC123 0258 dated 19 September 2003 r1–r24,
Minutes: PTC123 0260 dated 26 September 2003,
Tables: PTC123 Fares 0103 dated 26 September 2003,
PTC123 Fares 0104 dated 26 September 2003,
Intended effective date: 1 April 2004.

Docket Number: OST–2003–16236.
Date Filed: September 25, 2003.
Parties: Members of the International Air Transport Association.
Subject:
Mail Votes 332 and 333,
PTC23 AFR–TC3 0212 dated 30 September 2003 r1–r40,
Intended effective date: 1 April 2004.

Docket Number: OST–2003–16237.
Date Filed: September 25, 2003.
Parties: Members of the International Air Transport Association.
Subject:
Mail Vote 334,
PTC COMP 1094 dated 26 September 2003,
General Increase Resolution 002mm (except within Europe, between USA/US Territories and Austria, Chile, Czech Republic, Finland, France (including French Guiana, French Polynesia, Guadeloupe, Martinique, New Caledonia, Reunion, Saint Pierre and Miquelon), Germany, Iceland, Italy, Korea (Rep. of), Malaysia, Netherlands, New Zealand, Panama, Scandinavia, Switzerland),
Intended effective date: 15 October 2003.

Docket Number: OST–2003–16244.
Date Filed: September 26, 2003.
Parties: Members of the International Air Transport Association.
Subject:
Mail Vote 327,
Mail Vote 328,
PTC123 0256 dated 19 September 2003,
PTC123 0257 dated 19 September 2003 r1–r14,
Minutes: PTC123 0260 dated 26 September 2003,
Tables: PTC123 Fares 0101 dated 26 September 2003,
PTC123 Fares 0102 dated 26 September 2003,
Intended effective date: 1 March 2004.

Andrea M. Jenkins,

Program Manager, Docket Operations, Federal Register Liaison.

[FR Doc. 03–25657 Filed 10–9–03; 8:45 am]

BILLING CODE 4910–62–P

DEPARTMENT OF TRANSPORTATION

Federal Aviation Administration

Advisory Circular 39–8, Continued Airworthiness Assessments of Powerplant and Auxiliary Power Unit Installations on Transport Category Airplanes

AGENCY: Federal Aviation Administration (FAA), DOT.

ACTION: Notice of issuance of advisory circular.

SUMMARY: This notice announces the issuance of advisory circular (AC) 39–8, Continued Airworthiness Assessments of Powerplant and Auxiliary Power Unit Installations on Transport Category Airplanes. This AC describes the Continued Airworthiness Assessment Methodologies (CAAM). The Federal Aviation Administration (FAA) Engine and Propeller Directorate (EPD) and the Transport Airplane Directorate (TAD) may use CAAM to identify unsafe conditions and determine when an ''unsafe condition is likely to exist or develop in other products of the same type design'' before prescribing corrective action in accordance with Title 14 of the Code of Federal Regulations (14 CFR) part 39. CAAM is used for products associated with the Powerplant or Auxiliary Power Unit (APU) Installations on Transport Category Airplanes.

DATES: The Director, Aircraft Certification Service, issued AC 39–8 on September 8, 2003.

FOR FURTHER INFORMATION CONTACT: Ann Azevedo, Engine and Propeller Standards Staff, ANE–110, 12 New England Executive Park, Burlington, Massachusetts 01803; telephone: (781) 238–7117; fax: (781) 238–7199; e-mail: *ann.azevedo@faa.gov.* The subject AC is available on the Internet at the following address: *www.airweb.faa.gov/rgl.*

SUPPLEMENTARY INFORMATION: The FAA published a notice in the **Federal Register** on May 15, 2000 (65 FR 31051), and again on October 2, 2002 (67 FR 61947), to announce the availability of the proposed AC and invite interested parties to comment.

Authority: 49 U.S.C. 106(g), 40113, 44701–44702, 44704)

Issued in Washington, DC, on September 30, 2003.

John J. Hickey,

Director, Aircraft Certification Service.

[FR Doc. 03–25749 Filed 10–9–03; 8:45 am]

BILLING CODE 4910–13–M

DEPARTMENT OF TRANSPORTATION

Federal Aviation Administration

Notice of Intent To Rule on Request To Release Airport Property at the Pueblo Memorial Airport, Pueblo, CO

AGENCY: Federal Aviation Administration (FAA), DOT

ACTION: Notice of request to release airport property.

SUMMARY: The FAA proposes to rule and invite public comment on the release of land at the Pueblo Memorial Airport under the provisions of section 125 of the Wendell H. Ford Aviation Investment Reform Act for the 21st Century (AIR 21).

DATES: Comments must be received on or before October 31, 2003.

ADDRESSES: Comments on this application may be mailed or delivered to the FAA at the following address: Mr. Craig Sparks, Manager, Federal Aviation Administration, Northwest Mountain Region, Airports Division, Denver Airports District Office, 26805 E. 68th Ave., Suite 224, Denver, Colorado 80249.

In addition, one copy of any comments submitted to the FAA must be mailed or delivered to Mr. John O'Neal, Director of Aviation, Pueblo Memorial Airport, 31201 Bryan Circle Pueblo, Colorado, 81001.

FOR FURTHER INFORMATION CONTACT: Ms. Cynthia Nelson, Project Manager, Federal Aviation Administration, Northwest Mountain Region, Airports Division, Denver Airports District Office, 26805 E. 68th Ave., Suite 224, Denver, Colorado 80249.

The request to release property may be reviewed in person at this same location.

SUPPLEMENTARY INFORMATION: The FAA invites public comment on the request to release property at the Pueblo Memorial Airport under the provisions of the AIR 21.

On September 19, 2003, the FAA determined that the request to release property at the Pueblo Memorial Airport submitted by the City of Pueblo met the procedural requirements of the Federal Aviation Regulations, part 155. The FAA may approve the request, in whole or in part, no later than November 21, 2003.

The following is a brief overview of the request: The Pueblo Memorial Airport requests the release of 34.07 acres of non-aeronautical airport property to the City of Pueblo, Colorado. The purpose of this release is to allow the City of Pueblo to sell the subject land that was conveyed to the City by the United States acting through the War Assets Administration by Quit Claim Deed dated July 20, 1948. The sale of the parcel will provide funds for airport improvements.

Any person may inspect the request by appointment at the FAA office listed above under **FOR FURTHER INFORMATION CONTACT**.

In addition, any person may, inspect the application, notice and other documents germane to the application in person at Pueblo Memorial Airport 31201 Bryan Circle, Pueblo, CO 81001. Issued in Denver, Colorado on September 19, 2003.

Craig Sparks,

Manager, Denver Airports District Office.

[FR Doc. 03–25750 Filed 10–9–03; 8:45 am]

BILLING CODE 4910–13–M

DEPARTMENT OF TRANSPORTATION

Surface Transportation Board

[STB Docket No. AB–468 (Sub–No. 6X)]

Paducah & Louisville Railway, Inc.—Abandonment Exemption—in Hopkins County, KY

Paducah & Louisville Railway, Inc. (P&L), has filed a notice of exemption under 49 CFR 1152 Subpart F—*Exempt Abandonments* to abandon a 4.81-mile line of railroad between milepost J–159.6, near Ilsley, and milepost J–164.41, near Dawson Springs, in Hopkins County, KY. The line traverses United States Postal Service Zip Code 42408.

P&L has certified that: (1) No local traffic has moved over the line for at least 2 years; (2) any overhead traffic can be rerouted over other lines; (3) no formal complaint filed by a user of rail service on the line (or by a state or local government entity acting on behalf of such user) regarding cessation of service over the line either is pending with the Board or with any U.S. District Court or has been decided in favor of complainant within the 2-year period; and (4) the requirements at 49 CFR 1105.7 (environmental reports), 49 CFR 1105.8 (historic reports), 49 CFR 1105.11 (transmittal letter), 49 CFR 1105.12 (newspaper publication), and 49 CFR 1152.50(d)(1) (notice to governmental agencies) have been met.

As a condition to this exemption, any employee adversely affected by the abandonment shall be protected under *Oregon Short Line R. Co.—Abandonment—Goshen*, 360 I.C.C. 91 (1979). To address whether this condition adequately protects affected employees, a petition for partial revocation under 49 U.S.C. 10502(d) must be filed. Provided no formal expression of intent to file an offer of financial assistance (OFA) has been received, this exemption will be effective on November 12, 2003, unless stayed pending reconsideration. Petitions to stay that do not involve environmental issues,[1] formal expressions of intent to file an OFA under 49 CFR 1152.27(c)(2),[2] and trail use/rail banking requests under 49 CFR 1152.29 must be filed by October 20, 2003. Petitions to reopen or requests for public use conditions under 49 CFR 1152.28 must be filed by October 30, 2003, with the Surface Transportation Board, 1925 K Street, NW., Washington, DC 20423–0001.

A copy of any petition filed with the Board should be sent to P&L's representative: William A. Mullins, Baker & Miller, PLLC, 915 Fifteenth St. NW., Suite 1000, Washington, DC 20005.

If the verified notice contains false or misleading information, the exemption is void *ab initio.*

P&L has filed an environmental report which addresses the abandonment's effects, if any, on the environment and historic resources. SEA will issue an environmental assessment (EA) by October 17, 2003. Interested persons may obtain a copy of the EA by writing to SEA (Room 500, Surface Transportation Board, Washington, DC 20423–0001) or by calling SEA, at (202) 565–1539. [Assistance for the hearing impaired is available through the Federal Information Relay Service (FIRS) at 1–800–877–8339.] Comments on environmental and historic preservation matters must be filed within 15 days after the EA becomes available to the public.

Environmental, historic preservation, public use, or trail use/rail banking conditions will be imposed, where appropriate, in a subsequent decision.

Pursuant to the provisions of 49 CFR 1152.29(e)(2), P&L shall file a notice of consummation with the Board to signify that it has exercised the authority granted and fully abandoned the line. If consummation has not been effected by

[1] The Board will grant a stay if an informed decision on environmental issues (whether raised by a party or by the Board's Section of Environmental Analysis (SEA) in its independent investigation) cannot be made before the exemption's effective date. *See Exemption of Out-of-Service Rail Lines*, 5 I.C.C.2d 377 (1989). Any request for a stay should be filed as soon as possible so that the Board may take appropriate action before the exemption's effective date.

[2] Each OFA must be accompanied by the filing fee, which currently is set at $1,100. *See* 49 CFR 1002.2(f)(25).

P&L's filing of a notice of consummation by October 10, 2004, and there are no legal or regulatory barriers to consummation, the authority to abandon will automatically expire.

Board decisions and notices are available on our Web site at *http://www.stb.dot.gov.*

Decided: October 3, 2003.

By the Board, David M. Konschnik, Director, Office of Proceedings.

Vernon A. Williams,

Secretary.

[FR Doc. 03–25610 Filed 10–9–03; 8:45 am]

BILLING CODE 4915–00–P

DEPARTMENT OF TRANSPORTATION

Surface Transportation Board

[STB Docket No. AB–33 (Sub-No. 203X)]

Union Pacific Railroad Company—Abandonment Exemption—in Harris County, TX

On September 23, 2003, Union Pacific Railroad Company (UP) filed with the Surface Transportation Board a petition under 49 U.S.C. 10502 for exemption from the provisions of 49 U.S.C. 10903 to abandon the remaining portion of the Columbia Tap Industrial Lead, extending from milepost .064 near Walker and Palmer Streets to milepost 1.54 near Trulley and Velasco Streets in Houston, Harris County, TX, a distance of .90 miles. The line traverses U.S. Postal Service Zip Code 77003 and includes no stations.

The line does not contain federally granted rights-of-way. Any documentation in UP's possession will be made available promptly to those requesting it.

As a condition to this exemption, any employee adversely affected by the abandonment shall be protected under *Oregon Short Line R. Co.—Abandonment—Goshen*, 360 I.C.C. 91 (1979).

By issuance of this notice, the Board is instituting an exemption proceeding pursuant to 49 U.S.C. 10502(b). A final decision will be issued by January 9, 2004.

Any offer of financial assistance under 49 CFR 1152.27(b)(2) will be due no later than 10 days after service of a decision granting the petition for exemption. Each offer must be accompanied by a $1,100 filing fee. *See* 49 CFR 1002.2(f)(25).

All interested persons should be aware that, following abandonment of rail service and salvage of the line, the line may be suitable for other public use, including interim trail use. Any request for a public use condition under 49 CFR 1152.28 or for trail use/rail banking under 49 CFR 1152.29 will be due no later than October 30, 2003. Each trail use request must be accompanied by a $150 filing fee. *See* 49 CFR 1002.2(f)(27).

All filings in response to this notice must refer to STB Docket No. AB–33 (Sub-No. 203X) and must be sent to: (1) Surface Transportation Board, 1925 K Street, NW., Washington, DC 20423–0001; and (2) Mack H. Shumate, Jr., 101 North Wacker Drive, Room 1920, Chicago, IL 60606. Replies to the UP petition are due on or before October 30, 2003.

Persons seeking further information concerning abandonment and discontinuance procedures may contact the Board's Office of Public Services at (202) 565–1592 or refer to the full abandonment or discontinuance regulations at 49 CFR part 1152. Questions concerning environmental issues may be directed to the Board's Section of Environmental Analysis (SEA) at (202) 565–1539. [Assistance for the hearing impaired is available through the Federal Information Relay Service (FIRS) at 1–800–877–8339.]

An environmental assessment (EA) (or environmental impact statement (EIS), if necessary) prepared by SEA will be served upon all parties of record and upon any agencies or other persons who commented during its preparation. Other interested persons may contact SEA to obtain a copy of the EA (or EIS). EAs in these abandonment proceedings normally will be made available within 60 days of the filing of the petition.

The deadline for submission of comments on the EA will generally be within 30 days of its service.

Board decisions and notices are available on our Web site at *http://www.stb.dot.gov.*

Decided: October 3, 2003.

By the Board, David M. Konschnik, Director, Office of Proceedings.

Vernon A. Williams,

Secretary.

[FR Doc. 03–25611 Filed 10–9–03; 8:45 am]

BILLING CODE 4915–00–P

DEPARTMENT OF TRANSPORTATION

Surface Transportation Board

[STB Docket No. AB–33 (Sub–No. 157X)]

Union Pacific Railroad Company—Discontinuance of Trackage Rights Exemption—in Monterey County, CA

Union Pacific Railroad Company (UP) has filed a verified notice of exemption under 49 CFR Part 1152, Subpart F—*Exempt Abandonments and Discontinuances of Service and Trackage Rights* to discontinue trackage rights over a 13.1-mile line of railroad (the Seaside Industrial Lead) owned by the Transportation Agency for Monterey County (TAMC) [1] extending from milepost 110.2 near Castroville, CA, to the end of the line at milepost 123.3, near Seaside, CA, in Monterey County, CA.[2] The line traverses United States Postal Service ZIP Codes 95012 and 93955.

UP has certified that: (1) No local traffic has moved over the line for at least 2 years; (2) there is no overhead traffic on the line; (3) no formal complaint filed by a user of rail service on the line (or by a State or local government entity acting on behalf of such user) regarding cessation of service over the line either is pending with the Surface Transportation Board or with any U.S. District Court or has been decided in favor of complainant within the 2-year period; and (4) the requirements at 49 CFR 1152.50(d)(1) (notice to governmental agencies), and 49 CFR 1105.12 (newspaper publication) have been met.

As a condition to this exemption, any employee adversely affected by the discontinuance shall be protected under *Oregon Short Line R. Co.—Abandonment-Goshen,* 360 I.C.C. 91 (1979). To address whether this condition adequately protects affected employees, a petition for partial revocation under 49 U.S.C. 10502(d) must be filed.

Provided no formal expression of intent to file an offer of financial assistance (OFA) has been received, this exemption will be effective on November 11, 2003, unless stayed pending reconsideration.[3] Petitions to

---

[1] *See Transportation Agency for Monterey County-Acquisition Exemption-Line of Union Pacific Railroad Company,* STB Finance Docket No. 34405 (STB served and published Oct. 3, 2003).

[2] According to UP, the line has been sold to TAMC effective September 12, 2003. UP states that, in accordance with the terms of the sale, UP reserved trackage rights for freight operations over the line. UP states that it no longer has any need to maintain the reserved trackage rights for freight operations and therefore is proposing discontinuance of those rights. While the terms of the September 12 sale are not altogether clear from the filings made by the parties to that sale in either the present proceeding or in STB Finance Docket No. 34405, the fact that UP has couched its proposal as a discontinuance and not an abandonment would indicate that UP takes the position that a freight common carrier obligation was conveyed to TAMC as part of the September 12 sale.

[3] UP stated in its notice that the proposed discontinuance would be consummated on or after November 7, 2003 (which it projected to be 50 days after the notice was filed). Because UP's notice was not filed until September 22, 2003, the exemption is not due to take effect until November 11, 2003.

stay and formal expressions of intent to file an OFA under 49 CFR 1152.27(c)(2),[4] must be filed by October 20, 2003. Petitions to reopen [5] must be filed by October 30, 2003, with the Surface Transportation Board, 1925 K Street, NW., Washington, DC 20423–0001.

A copy of any petition filed with the Board should be sent to UP's representative: Mack H. Shumate, Jr., Senior General Attorney, 101 North Wacker Drive, Room 1920, Chicago, IL 60606.

If the verified notice contains false or misleading information, the exemption is void *ab initio.*

Board decisions and notices are available on the Board's Web site at *www.stb.dot.gov.*

Decided: October 6, 2003.

By the Board, David M. Konschnik, Director, Office of Proceedings.

Vernon A. Williams,

Secretary.

[FR Doc. 03–25786 Filed 10–9–03; 8:45 am]

BILLING CODE 4915–00–P

[4] Each OFA must be accompanied by the filing fee, which currently is set at $1,100. *See* 49 CFR 1002.2(f)(25).

[5] Because this is a discontinuance proceeding and not an abandonment, trail use/rail banking and public use conditions are not appropriate. Likewise no environmental or historic reporting requirements are required here under 49 CFR 1105.6(c), and 1105.8(b), respectively. However, UP submitted an environmental report with its notice.

DEPARTMENT OF TRANSPORTATION

Surface Transportation Board

[STB Docket No. AB–307 (Sub-No. 4X)]

Wyoming and Colorado Railroad Company, Inc.—Abandonment Exemption—in Albany County, WY

Wyoming and Colorado Railroad Company, Inc. (WYCO) has filed a verified notice of exemption under 49 CFR 1152 Subpart F—*Exempt Abandonments* to abandon a 1.12-mile line of railroad extending from milepost 0.19 to milepost 1.31 in the City of Laramie, Albany County, WY. The line traverses United States Postal Service Zip Code 82070.

WYCO has certified that: (1) No local traffic has moved over the line for at least 2 years; (2) there is no overhead traffic on the line; (3) no formal complaint filed by a user of rail service on the line (or by a state or local government entity acting on behalf of such user) regarding cessation of service over the line either is pending with the Board or with any U.S. District Court or has been decided in favor of complainant within the 2-year period; and (4) the requirements at 49 CFR 1105.7 (environmental reports), 49 CFR 1105.8 (historic reports), 49 CFR 1105.11 (transmittal letter), 49 CFR 1105.12 (newspaper publication), and 49 CFR 1152.50(d)(1) (notice to governmental agencies) have been met.

As a condition to this exemption, any employee adversely affected by the abandonment shall be protected under *Oregon Short Line R. Co.—Abandonment—Goshen,* 360 I.C.C. 91 (1979). To address whether this condition adequately protects affected employees, a petition for partial revocation under 49 U.S.C. 10502(d) must be filed. Provided no formal expression of intent to file an offer of financial assistance (OFA) has been received, this exemption will be effective on November 12, 2003, unless stayed pending reconsideration. Petitions to stay that do not involve environmental issues,[1] formal expressions of intent to file an OFA under 49 CFR 1152.27(c)(2),[2] and trail use/rail banking requests under 49 CFR 1152.29 must be filed by October 20, 2003. Petitions to reopen or requests for public use conditions under 49 CFR 1152.28 must be filed by October 30, 2003, with: Surface Transportation Board, 1925 K Street, NW., Washington, DC 20423.

A copy of any petition filed with the Board should be sent to WYCO's representative: Karl Morell, Ball Janik LLP, 1455 F St., NW., Suite 225, Washington, DC 20005.

If the verified notice contains false or misleading information, the exemption is void *ab initio.*

WYCO has filed an environmental report which addresses the abandonment's effects, if any, on the environment or historic resources. SEA will issue an environmental assessment (EA) by October 17, 2003. Interested persons may obtain a copy of the EA by writing to SEA (Room 500, Surface Transportation Board, Washington, DC 20423–0001) or by calling SEA, at (202) 565–1539. [Assistance for the hearing impaired is available through the Federal Information Relay Service (FIRS) at 1–800–877–8339.] Comments on environmental and historic preservation matters must be filed within 15 days after the EA becomes available to the public.

Environmental, historic preservation, public use, or trail use/rail banking conditions will be imposed, where appropriate, in a subsequent decision.

Pursuant to the provisions of 49 CFR 1152.29(e)(2), WYCO shall file a notice of consummation with the Board to signify that it has exercised the authority granted and fully abandoned the line. If consummation has not been effected by WYCO's filing of a notice of consummation by October 10, 2004, and there are no legal or regulatory barriers to consummation, the authority to abandon will automatically expire.

Board decisions and notices are available on our Web site at *www.stb.dot.gov.*

Decided: October 3, 2003.

By the Board, David M. Konschnik, Director, Office of Proceedings.

Vernon A. Williams,

Secretary.

[FR Doc. 03–25609 Filed 10–9–03; 8:45 am]

BILLING CODE 4915–00–P

[1] The Board will grant a stay if an informed decision on environmental issues (whether raised by a party or by the Board's Section of Environmental Analysis (SEA) in its independent investigation) cannot be made before the exemption's effective date. *See Exemption of Out-of-Service Rail Lines,* 5 I.C.C.2d 377 (1989). Any request for a stay should be filed as soon as possible so that the Board may take appropriate action before the exemption's effective date.

[2] Each OFA must be accompanied by the filing fee, which currently is set at $1,100. *See* 49 CFR 1002.2(f)(25).

DEPARTMENT OF TRANSPORTATION

Bureau of Transportation Statistics

Advisory Council on Transportation Statistics; Notice of Meeting

AGENCY: Bureau of Transportation Statistics (BTS), DOT.

ACTION: Notice.

This notice announces, pursuant to Section 10(A)(2) of the Federal Advisory Committee Act (FACA) (Pub. L. 72–363; 5 U.S.C. app. 2), a meeting of the BTS Advisory Council on Transportation Statistics (ACTS). The meeting will be held on October 27, 2003, from 10:00 a.m. to 4:00 p.m. The meeting will take place at the U.S. Department of Transportation, 400 Seventh Street, SW., Washington DC, on the 3rd Floor, in Conference Room 3200 of the Nassif Building.

The ACTS, established under Section 6007 of Pub. L. 102–240, Intermodal Surface Transportation Efficiency Act of 1991, December 18, 1991, and chartered on June 19, 1995, was created to advise the Director of BTS on transportation statistics and analyses, including whether or not the statistics and analysis disseminated by the BTS are of high quality and are based upon the best available objective information.

The following is a summary of the meeting's agenda: (1) Opening Remarks; (2) Program Update; (3) Reauthorization

Legislation; (4) Freight Data Program; (5) National Household Travel Survey; (6) Analytical Agenda; (7) General Discussion; and (8) Public Comments and Closing Remarks.

Since access to the DOT building is controlled, all persons who plan to attend the meeting must notify Ms. Phyllis Seville, the Committee Management Officer at (202) 366–9510 prior to October 24, 2003. Individuals attending the meeting must report to the SW Lobby of the Nassif Building for admission to the building. Attendance is open to the public, but limited space is available. With the approval of the Chair, members of the public may present oral statements at the meeting. Non-committee members wishing to present oral statements or obtain information should also contact Ms. Seville.

Questions about the agenda or written comments may be submitted by U.S. Mail to: U.S. Department of Transportation, BTS, Attention: Robert A. Monniere, Room 3103, 400 Seventh St. SW., Washington DC 20590 or faxed to (202) 366–3640. BTS requests that written comments be submitted prior to the meeting.

Persons with a disability requiring special services, such as an interpreter for the hearing impaired, should contact Ms. Seville at (202) 366–9510 at least seven calendar days prior to the meeting.

Notice of this meeting is provided in accordance with the FACA and the General Service Administration regulations (41 C.F.R. Part 102–3) covering management of Federal advisory committees.

Issued in Washington, DC, on October 2, 2003.

Rick Kowalewski,

Deputy Director, Bureau of Transportation Statistics.

[FR Doc. 03–25658 Filed 10–9–03; 8:45 am]

BILLING CODE 4910–HY–P

DEPARTMENT OF THE TREASURY

Departmental Offices; Debt Management Advisory Committee; Meeting

Notice is hereby given, pursuant to 5 U.S.C. app. 2. section 10(a)(2), that a meeting will be held at the U.S. Treasury Department, 15th and Pennsylvania Avenue, NW., Washington, DC, on October 28, 2003, at 11 a.m. of the following debt management advisory committee: Treasury Borrowing Advisory Committee of The Bond Market Association (''Committee'').

The agenda for the meeting provides for a charge by the Secretary of the Treasury or his designate that the Committee discuss particular issues, and a working session. Following the working session, the Committee will present a written report of its recommendations. The meeting will be closed to the public, pursuant to 5 U.S.C. app. 2 section 10(d) and Public Law 103–202, section 202(c)(1)(B) (31 U.S.C. 3121 note).

This notice shall constitute my determination, pursuant to the authority placed in heads of agencies by 5 U.S.C. app. 2, section 10(d) and vested in me by Treasury Department Order No. 101–05, that the meeting will consist of discussions and debates of the issues presented to the Committee by the Secretary of the Treasury and the making of recommendations of the Committee to the Secretary, pursuant to Public Law 103–202, section 202(c)(1)(B). Thus, this information is exempt from disclosure under that provision and 5 U.S.C. 552b(c)(3)(B). In addition, the meeting is concerned with information that is exempt from disclosure under 5 U.S.C. 55sb(c)(9)(A). The public interest requires that such meetings be closed to the public because the Treasury Department requires frank and full advice from representatives of the financial community prior to making its final decision on major financing operations. Historically, this advice has been offered by debt management advisory committees established by the several major segments of the financial community. When so utilized, such a committee is recognized to be an advisory committee under 5 U.S.C. app. 2, section 3.

Although the Treasury's final announcement of financing plans may not reflect the recommendations provided in reports of the Committee, premature disclosure of the Committee's deliberations and reports would be likely to lead to significant financial speculation in the securities market. Thus, this meeting falls within the exemption covered by 5 U.S.C. 552b(c)(9)(A).

Treasury staff will provide a technical briefing to the press on the day before the Committee meeting, following the release of a statement of economic conditions, financing estimates and technical charts. This briefing will give the press an opportunity to ask questions about financing projections and technical charts. The day after the Committee meeting, Treasury will release the minutes of the meeting, any charts that were discussed at the meeting, and the Committee's report to the Secretary.

The Office of Financial Markets is responsible for maintaining records of debt management advisory committee meetings and for providing annual reports setting forth a summary of Committee activities and such other matters as may be informative to the public consistent with the policy of 5 U.S.C. 552(b). The Designated Federal Officer or other responsible agency official who may be contacted for additional information is Tim Bitsbergerr, Deputy Assistant Secretary, Federal Finance, at (202) 622–2245.

Dated: October 7, 2003.

Brian C. Roseboro,

Assistant Secretary, Financial Markets.

[FR Doc. 03–25831 Filed 10–9–03; 8:45 am]

BILLING CODE 4810–25–M

DEPARTMENT OF THE TREASURY

Alcohol and Tobacco Tax and Trade Bureau

Proposed Collection; Comment Request

ACTION: Notice and request for comments.

SUMMARY: The Department of the Treasury, as part of its continuing effort to reduce paperwork and respondent burden, invites the general public and other Federal agencies to take this opportunity to comment on proposed and/or continuing information collections, as required by the Paperwork Reduction Act of 1995, Pub. L. 104–13 (44 U.S.C. 3506(c)(2)(A)). Currently, the Alcohol and Tobacco Tax and Trade Bureau, within the Department of the Treasury, is soliciting comments concerning the ''Inventory-Manufacturer of Tobacco Products.''

DATES: Written comments should be received on or before December 9, 2003 to be assured of consideration.

ADDRESSES: Direct all written comments to Sandra L. Turner, Alcohol and Tobacco Tax and Trade Bureau, 1310 G Street, NW., Washington, DC 20220, 202–927–8210.

FOR FURTHER INFORMATION CONTACT: Requests for additional information or copies of the form(s) and instructions should be directed to Sandra L. Turner, Alcohol and Tobacco Tax and Trade Bureau, 1310 G Street, NW., Washington, DC 20220; telephone 202–927–8210.

SUPPLEMENTARY INFORMATION:

Title: Inventory-Manufacturer of Tobacco Products.

OMB Number: 1513–0032.

Form Number: TTB F 3067 (5210.9).

Abstract: TTB F 3067 (5210.9) is used by tobacco product manufacturers to record inventories that are required by law. This form provides a uniform format for recording inventories and establishes tax liability on tobacco products enabling TTB to determine that correct taxes have been or will be paid. The record retention requirement for this information collection is 3 years after the close of the year for which inventories and reports are filed.

Current Actions: There are no changes to this information collection and it is being submitted for extension purposes only.

Type of Review: Extension.

Affected Public: Business or other for-profit.

Estimated Number of Respondents: 34.

Estimated Total Annual Burden Hours: 170.

Request for Comments: Comments submitted in response to this notice will be summarized and/or included in the request for OMB approval. All comments will become a matter of public record. Comments are invited on: (a) Whether the collection of information is necessary for the proper performance of the functions of the agency, including whether the information shall have practical utility; (b) the accuracy of the agency's estimate of the burden of the collection of information; (c) ways to enhance the quality, utility, and clarity of the information to be collected; (d) ways to minimize the burden of the collection of information on respondents, including through the use of automated collection techniques or other forms of information technology; and (e) estimates of capital or start-up costs and costs of operation, maintenance, and purchase of services to provide information.

Dated: September 30, 2003.

William H. Foster,

Chief, Regulations and Procedures Division.

[FR Doc. 03–25812 Filed 10–9–03; 8:45 am]

BILLING CODE 4810–13–P

DEPARTMENT OF THE TREASURY

Alcohol and Tobacco Tax and Trade Bureau

Proposed Collection; Comment Request

ACTION: Notice and request for comments.

SUMMARY: The Department of the Treasury, as part of its continuing effort to reduce paperwork and respondent burden, invites the general public and other Federal agencies to take this opportunity to comment on proposed and/or continuing information collections, as required by the Paperwork Reduction Act of 1995, Pub. L. 104–13 (44 U.S.C. 3506(c)(2)(A)). Currently, the Alcohol and Tobacco Tax and Trade Bureau, within the Department of the Treasury, is soliciting comments concerning the ''Usual and Customary Business Records Relating to Tax-Free Alcohol.''

DATES: Written comments should be received on or before December 9, 2003 to be assured of consideration.

ADDRESSES: Direct all written comments to Sandra L. Turner, Alcohol and Tobacco Tax and Trade Bureau, 1310 G Street, NW., Washington, DC 20220; telephone 202–927–8210.

FOR FURTHER INFORMATION CONTACT: Requests for additional information or copies of the form(s) and instructions should be directed to Sandra L. Turner, Alcohol and Tobacco Tax and Trade Bureau, 1310 G Street, NW., Washington, DC 20220; telephone 202–927–8210.

SUPPLEMENTARY INFORMATION:

Title: Usual and Customary Business Records Relating to Tax-Free Alcohol TTB REC 5150/3.

OMB Number: 1513–0059.

Recordkeeping Requirement ID Number: TTB REC 5150/3.

Abstract: Tax-free alcohol is used for nonbeverage purposes by educational organizations, hospitals, laboratories, etc. The use of alcohol free of tax is regulated to prevent illegal diversion to taxable beverage use. Records maintain spirits accountability and protect tax revenue and public safety. The record retention requirement for this information collection is 3 years.

Current Actions: There are no changes to this information collection and it is being submitted for extension only.

Type of Review: Extension.

Affected Public: Not-for-profit institutions, Federal Government, State, Local or Tribal Government.

Estimated Number of Respondents: 4,560.

Estimated Total Annual Burden Hours: One (1).

Request for Comments: Comments submitted in response to this notice will be summarized and/or included in the request for OMB approval. All comments will become a matter of public record. Comments are invited on: (a) Whether the collection of information is necessary for the proper performance of the functions of the agency, including whether the information shall have practical utility; (b) the accuracy of the agency's estimate of the burden of the collection of information; (c) ways to enhance the quality, utility, and clarity of the information to be collected; (d) ways to minimize the burden of the collection of information on respondents, including through the use of automated collection techniques or other forms of information technology; and (e) estimates of capital or start-up costs and costs of operation, maintenance, and purchase of services to provide information.

Dated: September 30, 2003.

William H. Foster,

Chief, Regulations and Procedures Division.

[FR Doc. 03–25813 Filed 10–9–03; 8:45 am]

BILLING CODE 4810–13–P

DEPARTMENT OF THE TREASURY

Alcohol and Tobacco Tax and Trade Bureau

Proposed Collection; Comment Request

ACTION: Notice and request for comments.

SUMMARY: The Department of the Treasury, as part of its continuing effort to reduce paperwork and respondent burden, invites the general public and other Federal agencies to take this opportunity to comment on proposed and/or continuing information collections, as required by the Paperwork Reduction Act of 1995, Pub. L. 104–13 (44 U.S.C. 3506(c)(2)(A)). Currently, the Alcohol and Tobacco Tax and Trade Bureau, within the Department of the Treasury, is soliciting comments concerning the ''Letterhead Applications and Notices Relating to Denatured Spirits.''

DATES: Written comments should be received on or before December 9, 2003 to be assured of consideration.

ADDRESSES: Direct all written comments to Sandra L. Turner, Alcohol and Tobacco Tax and Trade Bureau, 1310 G Street, NW., Washington, DC 20220; telephone 202–927–8210.

FOR FURTHER INFORMATION CONTACT: Requests for additional information or copies of the form(s) and instructions should be directed to Sandra L. Turner, Alcohol and Tobacco Tax and Trade Bureau, 1310 G Street, NW., Washington, DC 20220; telephone 202–927–8210.

SUPPLEMENTARY INFORMATION:

Title: Letterhead Applications and Notices Relating to Denatured Spirits

OMB Number: 1513–0061.

Recordkeeping Requirement ID Number: TTB REC 5150/2.

Abstract: Denatured spirits are used for nonbeverage industrial purposes in the manufacture of personal and household products. Permits and applications control the authorized use and flow. Tax revenue and public safety is protected. The record retention requirement for this information collection is 3 years.

Current Actions: There are no changes to this information collection and it is being submitted for extension purposes only.

Type of Review: Extension.

Affected Public: Business or other for-profit.

Estimated Number of Respondents: 3,111.

Estimated Total Annual Burden Hours: 1,556.

Request for Comments: Comments submitted in response to this notice will be summarized and/or included in the request for OMB approval. All comments will become a matter of public record. Comments are invited on: (a) Whether the collection of information is necessary for the proper performance of the functions of the agency, including whether the information shall have practical utility; (b) the accuracy of the agency's estimate of the burden of the collection of information; (c) ways to enhance the quality, utility, and clarity of the information to be collected; (d) ways to minimize the burden of the collection of information on respondents, including through the use of automated collection techniques or other forms of information technology; and (e) estimates of capital or start-up costs and costs of operation, maintenance, and purchase of services to provide information.

Dated: September 30, 2003.

William H. Foster,

Chief, Regulations and Procedures Division.

[FR Doc. 03–25814 Filed 10–9–03; 8:45 am]

BILLING CODE 4810–13–P

DEPARTMENT OF THE TREASURY

Alcohol and Tobacco Tax and Trade Bureau

Proposed Collection; Comment Request

ACTION: Notice and request for comments.

SUMMARY: The Department of the Treasury, as part of its continuing effort to reduce paperwork and respondent burden, invites the general public and other Federal agencies to take this opportunity to comment on proposed and/or continuing information collections, as required by the Paperwork Reduction Act of 1995, Pub. L. 104–13 (44 U.S.C. 3506(c)(2)(A)). Currently, the Alcohol and Tobacco Tax and Trade Bureau, within the Department of the Treasury, is soliciting comments concerning the ''Tobacco Products Manufacturers—Records of Operations.''

DATES: Written comments should be received on or before December 9, 2003 to be assured of consideration.

ADDRESSES: Direct all written comments to Sandra L. Turner, Alcohol and Tobacco Tax and Trade Bureau, 1310 G Street, NW., Washington, DC 20220; telephone 202–927–8210.

FOR FURTHER INFORMATION CONTACT: Requests for additional information or copies of the form(s) and instructions should be directed to Sandra L. Turner, Alcohol and Tobacco Tax and Trade Bureau, 1310 G Street, NW., Washington, DC 20220; telephone 202–927–8210.

SUPPLEMENTARY INFORMATION:

Title: Tobacco Products Manufacturers—Records of Operations.

OMB Number: 1513–0068.

Recordkeeping Requirement ID Number: TTB REC 5210/1.

Abstract: Tobacco manufacturers must maintain a system of records that provide accountability over the tobacco products received and produced. Needed to ensure tobacco transactions to be traced, and ensure that tax liabilities have been totally satisfied. The record retention for this information collection is 3 years.

Current Actions: There are no changes to this information collection and it is being submitted for extension purposes only.

Type of Review: Extension.

Affected Public: Business or other for-profit.

Estimated Number of Respondents: 108.

Estimated Total Annual Burden Hours: 16,200.

Request for Comments: Comments submitted in response to this notice will be summarized and/or included in the request for OMB approval. All comments will become a matter of public record. Comments are invited on: (a) Whether the collection of information is necessary for the proper performance of the functions of the agency, including whether the information shall have practical utility; (b) the accuracy of the agency's estimate of the burden of the collection of information; (c) ways to enhance the quality, utility, and clarity of the information to be collected; (d) ways to minimize the burden of the collection of information on respondents, including through the use of automated collection techniques or other forms of information technology; and (e) estimates of capital or start-up costs and costs of operation, maintenance, and purchase of services to provide information.

Dated: September 30, 2003.

William H. Foster,

Chief, Regulations and Procedures Division.

[FR Doc. 03–25815 Filed 10–9–03; 8:45 am]

BILLING CODE 4810–13–P

DEPARTMENT OF THE TREASURY

Alcohol and Tobacco Tax and Trade Bureau

Proposed Collection; Comment Request

ACTION: Notice and request for comments.

SUMMARY: The Department of the Treasury, as part of its continuing effort to reduce paperwork and respondent burden, invites the general public and other Federal agencies to take this opportunity to comment on proposed and/or continuing information collections, as required by the Paperwork Reduction Act of 1995, Pub. L. 104–13 (44 U.S.C. 3506(c)(2)(A)). Currently, the Alcohol and Tobacco Tax and Trade Bureau, within the Department of the Treasury, is soliciting comments concerning the Tobacco Products Importer or Manufacturer—Records of Large Cigar Wholesale Prices.

DATES: Written comments should be received on or before December 9, 2003 to be assured of consideration.

ADDRESSES: Direct all written comments to Sandra L. Turner, Alcohol and Tobacco Tax and Trade Bureau, 1310 G Street, NW., Washington, DC 20220; telephone 202–927–8210.

FOR FURTHER INFORMATION CONTACT: Requests for additional information or copies of the form(s) and instructions should be directed to Sandra L. Turner, Alcohol and Tobacco Tax and Trade Bureau, 1310 G Street, NW., Washington, DC 20220; telephone 202–927–8210.

SUPPLEMENTARY INFORMATION:

Title: Tobacco Products Importer or Manufacturer—Records of Large Cigar Wholesale Prices.

OMB Number: 1513–0071.

Recordkeeping Requirement ID Number: TTB REC 5230/1.

Abstract: This information collection is used by tobacco products importers or manufacturers who import or make large cigars. Records are needed to

verify wholesale prices of those cigars and tax is based on those prices. The collection also ensures that all tax revenues due to the government are collected. The record retention period for this information collection is 3 years.

Current Actions: There are no changes to this information collection and it is being submitted for extension purposes only.

Type of Review: Extension.

Affected Public: Business or other for-profit.

Estimated Number of Respondents: 108.

Estimated Total Annual Burden Hours: 252.

Request for Comments: Comments submitted in response to this notice will be summarized and/or included in the request for OMB approval. All comments will become a matter of public record. Comments are invited on: (a) Whether the collection of information is necessary for the proper performance of the functions of the agency, including whether the information shall have practical utility; (b) the accuracy of the agency's estimate of the burden of the collection of information; (c) ways to enhance the quality, utility, and clarity of the information to be collected; (d) ways to minimize the burden of the collection of information on respondents, including through the use of automated collection techniques or other forms of information technology; and (e) estimates of capital or start-up costs and costs of operation, maintenance, and purchase of services to provide information.

Dated: September 30, 2003.

William H. Foster,

Chief, Regulations and Procedures Division.

[FR Doc. 03–25816 Filed 10–9–03; 8:45 am]

BILLING CODE 4810–13–P

DEPARTMENT OF THE TREASURY

Internal Revenue Service

[REG–111835–99]

Proposed Collection; Comment Request for Regulation Project

AGENCY: Internal Revenue Service (IRS), Treasury.

ACTION: Notice and request for comments.

SUMMARY: The Department of the Treasury, as part of its continuing effort to reduce paperwork and respondent burden, invites the general public and other Federal agencies to take this opportunity to comment on proposed and/or continuing information collections, as required by the Paperwork Reduction Act of 1995, Pub. L. 104–13 (44 U.S.C. 3506(c)(2)(A)). Currently, the IRS is soliciting comments concerning an existing notice of proposed rulemaking, Regulations Governing Practice Before the Internal Revenue Service (§§ 31.10.6, 31.10.29 and 31.10.30.

DATES: Written comments should be received on or before December 9, 2003 to be assured of consideration.

ADDRESSES: Direct all written comments to Glenn P. Kirkland, Internal Revenue Service, room 6411, 1111 Constitution Avenue NW., Washington, DC 20224.

FOR FURTHER INFORMATION CONTACT: Requests for additional information or copies of the regulation should be directed to Carol Savage at Internal Revenue Service, room 6407, 1111 Constitution Avenue NW., Washington, DC 20224, or at (202) 622–3945, or through the Internet at *carol.a.savage@irs.gov.*

SUPPLEMENTARY INFORMATION:

Title: Regulations Governing Practice Before the Internal Revenue Service.

OMB Number: 1545–1726.

Regulation Project Number: REG–111835–00.

Abstract: These regulations affect individuals who are eligible to practice before the Internal Revenue Service. These regulations also authorize the Director of Practice to act upon applications for enrollment to practice before the Internal Revenue Service. The Director of Practice will use certain information to ensure that: (1) Enrolled agents properly complete continuing education requirements to obtain renewal; (2) practitioners properly obtain consent of taxpayers before representing conflicting interests; (3) practitioners do not use e-commerce to make misleading solicitations.

Current Actions: There is no change to this existing regulation.

Type of Review: Extension of a currently approved collection.

Affected Public: Business or other for-profit organizations.

Estimated Number of Respondents: 56,000.

Estimated Time Per Respondent: 53 minutes.

Estimated Total Annual Burden Hours: 50,000.

The following paragraph applies to all of the collections of information covered by this notice:

An agency may not conduct or sponsor, and a person is not required to respond to, a collection of information unless the collection of information displays a valid OMB control number. Books or records relating to a collection of information must be retained as long as their contents may become material in the administration of any internal revenue law. Generally, tax returns and tax return information are confidential, as required by 26 U.S.C. 6103.

Request for Comments: Comments submitted in response to this notice will be summarized and/or included in the request for OMB approval. All comments will become a matter of public record. Comments are invited on: (a) Whether the collection of information is necessary for the proper performance of the functions of the agency, including whether the information shall have practical utility; (b) the accuracy of the agency's estimate of the burden of the collection of information; (c) ways to enhance the quality, utility, and clarity of the information to be collected; (d) ways to minimize the burden of the collection of information on respondents, including through the use of automated collection techniques or other forms of information technology; and (e) estimates of capital or start-up costs and costs of operation, maintenance, and purchase of services to provide information.

Approved: October 6, 2003.

Carol Savage,

Management and Program Analyst.

[FR Doc. 03–25822 Filed 10–9–03; 8:45 am]

BILLING CODE 4830–01–P

DEPARTMENT OF THE TREASURY

Internal Revenue Service

[REG–106446–98]

Proposed Collection; Comment Request for Regulation Project

AGENCY: Internal Revenue Service (IRS), Treasury.

ACTION: Notice and request for comments.

SUMMARY: The Department of the Treasury, as part of its continuing effort to reduce paperwork and respondent burden, invites the general public and other Federal agencies to take this opportunity to comment on proposed and/or continuing information collections, as required by the Paperwork Reduction Act of 1995, Pub. L. 104–13 (44 U.S.C. 3506(c)(2)(A)). Currently, the IRS is soliciting comments concerning an existing final regulation, REG–106446–98 (TD 9003), Relief From Joint and Several Liability (§ 1.6015–5).

DATES: Written comments should be received on or before December 9, 2003 to be assured of consideration.

ADDRESSES: Direct all written comments to Glenn P. Kirkland, Internal Revenue Service, room 6411, 1111 Constitution Avenue NW., Washington, DC 20224.

FOR FURTHER INFORMATION CONTACT: Requests for additional information or copies of the regulations should be directed to Carol Savage at Internal Revenue Service, room 6407, 1111 Constitution Avenue NW., Washington, DC 20224, or at (202) 622–3945, or through the Internet at *carol.a.savage@irs.gov.*

SUPPLEMENTARY INFORMATION:

Title: Relief From Joint and Several Liability.

OMB Number: 1545–1719.

Regulation Project Number: REG–106446–98.

Abstract: The regulation under section 6015 provides guidance regarding relief from the joint and several liability imposed by section 6013(d)(3). The regulations provide specific guidance on the three relief provisions of section 6015 and on how taxpayers would file a claim for such relief. In addition, the regulations provide guidance regarding Tax Court review of certain types of claims for relief, as well as information regarding the rights of the nonrequesting spouse. The regulations also clarify that, under section 6013, a return is not a joint return if one of the spouses signs the return under duress.

Current Actions: There is no change to this existing regulation.

Type of Review: Extension of a currently approved collection.

Affected Public: Individuals.

The estimate of the reporting burden in § 1.6015–5 for filing a claim for relief from joint and several liability is reflected in the burden of Form 8857.

The following paragraph applies to all of the collections of information covered by this notice:

An agency may not conduct or sponsor, and a person is not required to respond to, a collection of information unless the collection of information displays a valid OMB control number. Books or records relating to a collection of information must be retained as long as their contents may become material in the administration of any internal revenue law. Generally, tax returns and tax return information are confidential, as required by 26 U.S.C. 6103.

Request for Comments: Comments submitted in response to this notice will be summarized and/or included in the request for OMB approval. All comments will become a matter of public record. Comments are invited on: (a) Whether the collection of information is necessary for the proper performance of the functions of the agency, including whether the information shall have practical utility; (b) the accuracy of the agency's estimate of the burden of the collection of information; (c) ways to enhance the quality, utility, and clarity of the information to be collected; (d) ways to minimize the burden of the collection of information on respondents, including through the use of automated collection techniques or other forms of information technology; and (e) estimates of capital or start-up costs and costs of operation, maintenance, and purchase of services to provide information.

Approved: October 6, 2003.

Carol Savage,

Management and Program Analyst.

[FR Doc. 03–25823 Filed 10–9–03; 8:45 am]

BILLING CODE 4830–01–P

DEPARTMENT OF THE TREASURY

Internal Revenue Service

[REG–105946–00]

Proposed Collection; Comment Request for Regulation Project

AGENCY: Internal Revenue Service (IRS), Treasury.

ACTION: Notice and request for comments.

SUMMARY: The Department of the Treasury, as part of its continuing effort to reduce paperwork and respondent burden, invites the general public and other Federal agencies to take this opportunity to comment on proposed and/or continuing information collections, as required by the Paperwork Reduction Act of 1995, Public Law 104–13 (44 U.S.C. 3506(c)(2)(A)). Currently, the IRS is soliciting comments concerning an existing final regulation, REG–105946–00 (TD 8995), Mid-Contract Change in Taxpayer (section 1.460–6).

DATES: Written comments should be received on or before December 9, 2003, to be assured of consideration.

ADDRESSES: Direct all written comments to Glenn P. Kirkland, Internal Revenue Service, room 6511, 1111 Constitution Avenue, NW., Washington, DC 20224.

FOR FURTHER INFORMATION CONTACT: Requests for additional information or copies of regulations should be directed to Carol Savage at Internal Revenue Service, room 6407, 1111 Constitution Avenue, NW., Washington, DC 20224, or at (202) 622–3945, or through the Internet at *CAROL.A.SAVAGE@irs.gov*.

SUPPLEMENTARY INFORMATION:

Title: Mid-Contract Change in Taxpayer.

OMB Number: 1545–1732.

Regulation Project Number: REG–105946–00.

Abstract: The information is needed by taxpayers who assume the obligation to account for the income from long-term contracts as the result of certain nontaxable transactions.

Current Actions: There is no change to this existing regulation.

Type of Review: Extension of a currently approved collection.

Affected Public: Business or other for-profit organizations.

Estimated Number of Respondents: 5,000.

Estimated Time Per Respondent: 2 hours.

Estimated Total Annual Burden Hours: 10,000.

The following paragraph applies to all of the collections of information covered by this notice:

An agency may not conduct or sponsor, and a person is not required to respond to, a collection of information unless the collection of information displays a valid OMB control number. Books or records relating to a collection of information must be retained as long as their contents may become material in the administration of any internal revenue law. Generally, tax returns and tax return information are confidential, as required by 26 U.S.C. 6103.

Request for Comments: Comments submitted in response to this notice will be summarized and/or included in the request for OMB approval. All comments will become a matter of public record. Comments are invited on: (a) Whether the collection of information is necessary for the proper performance of the functions of the agency, including whether the information shall have practical utility; (b) the accuracy of the agency's estimate of the burden of the collection of information; (c) ways to enhance the quality, utility, and clarity of the information to be collected; (d) ways to minimize the burden of the collection of information on respondents, including through the use of automated collection techniques or other forms of information technology; and (e) estimates of capital or start-up costs and costs of operation, maintenance, and purchase of services to provide information.

Approved: October 6, 2003.

Carol Savage,

Management and Program Analyst.

[FR Doc. 03–25824 Filed 10–9–03; 8:45 am]

BILLING CODE 4830–01–P

DEPARTMENT OF THE TREASURY

Internal Revenue Service

Open Meeting of the Joint Committee of the Taxpayer Advocacy Panel

AGENCY: Internal Revenue Service (IRS), Treasury.

ACTION: Notice.

SUMMARY: An open meeting of the Joint Committee of the Taxpayer Advocacy Panel will be conducted via teleconference.

DATES: The meeting will be held Tuesday, October 21, 2003, at 1:30 p.m., eastern daylight time.

FOR FURTHER INFORMATION CONTACT: Barbara Toy at 1–888–912–1227, or 414–297–1611.

SUPPLEMENTARY INFORMATION: Notice is hereby given pursuant to section 10(a)(2) of the Federal Advisory Committee Act, 5 U.S.C. App. (1988) that an open meeting of the Joint Committee of the Taxpayer Advocacy Panel (TAP) will be held Tuesday, October 21, 2003, from 1:30 p.m. to 3 p.m. eastern daylight time via a telephone conference call. If you would like to have the Joint Committee of TAP consider a written statement, please call 1–888–912–1227 or 414–297–1611, or write Barbara Toy, TAP Office, MS–1006–MIL, 310 West Wisconsin Avenue, Milwaukee, WI 53203–2221, or FAX to 414–297–1623. Due to limited conference lines, notification of intent to participate in the telephone conference call meeting must be made with Barbara Toy. Ms. Toy can be reached at 1–888–912–1227 or 414–297–1611, or FAX 414–297–1623.

The agenda will include the following: monthly committee summary report, discussion of issues brought to the joint committee, office report and discussion of next meeting.

Dated: October 7, 2003.

Tersheia Carter,

Acting Director, Taxpayer Advocacy Panel.

[FR Doc. 03–25825 Filed 10–9–03; 8:45 am]

BILLING CODE 4830–01–P

TREASURY DEPARTMENT

Bureau of the Public Debt

Senior Executive Service; Combined Performance Review Board (PRB)

AGENCY: Bureau of the Public Debt, Treasury Department.

ACTION: Notice of members of Combined Performance Review Board (PRB).

SUMMARY: Pursuant to 5 U.S.C. 4314(c)(4), this notice announces the appointment of members of the Combined PRB for the Bureau of the Public Debt, the Financial Management Service, the U.S. Mint, and the Bureau of Engraving and Printing. The Board reviews the performance appraisals of career senior executives below the level of bureau head and principal deputy in the four bureaus, except for executives below the Assistant Commissioner level in the Financial Management Service. The Board makes recommendations regarding proposed performance appraisals, ratings, bonuses and other appropriate personnel actions.

Composition of Combined PRB: The Board shall consist of at least three voting members. In case of an appraisal of a career appointee, more than half of the members shall consist of career appointees. The names and titles of the Combined PRB members are as follows:

Primary Members

Frederick A. Pyatt, Assistant Commissioner (Office of Investor Services), BPD.

Scott Johnson, Assistant Commissioner (Management), CFO, FMS.

Jerry Horton, Associate Director, CIO, U.S. Mint.

Joel C. Taub, Associate Director (Management), BEP.

Alternate Members

Cynthia Z. Springer, Assistant Commissioner (Office of Information Technology), BPD.

Judy Tillman, Assistant Commissioner (Financial Operations), FMS.

Gloria Eskridge, Associate Director (Sales and Marketing), U.S. Mint.

Gregory D. Carper, Associate Director, CFO, BEP.

DATES: Membership is effective on October 6, 2003.

FOR FURTHER INFORMATION CONTACT: Frederick A. Pyatt, Assistant Commissioner (Office of Investor Services), Bureau of the Public Debt, 200 Third Street, Parkersburg, WV 26106–1328, (304) 480–7730.

This notice does not meet the Department's criteria for significant regulations.

Frederick A. Pyatt,

Assistant Commissioner (Office of Investor Services), Bureau of the Public Debt.

[FR Doc. 03–25701 Filed 10–9–03; 8:45 am]

BILLING CODE 4810–39–P

Corrections

Federal Register

Vol. 68, No. 197

Friday, October 10, 2003

This section of the FEDERAL REGISTER contains editorial corrections of previously published Presidential, Rule, Proposed Rule, and Notice documents. These corrections are prepared by the Office of the Federal Register. Agency prepared corrections are issued as signed documents and appear in the appropriate document categories elsewhere in the issue.

DEPARTMENT OF HEALTH AND HUMAN SERVICES

Centers for Medicare & Medicaid Services

42 CFR Parts 409, 411, 413, 440, 483, 488, and 489

[CMS–1469–CN]

RIN 0938–AL90

Medicare Program; Prospective Payment System and Consolidated Billing for Skilled Nursing Facilities; Correction

Correction

In rule document 03–24549 beginning on page 55882 in the issue of Monday, September 29, 2003, make the following correction:

On page 55890, in the third column, Table 7 is being reprinted in part to read as follows:

TABLE 7.—WAGE INDEX FOR URBAN AREAS—CONTINUED

Urban area (constituent counties or county equivalents)	Wage index
* * *	* *
1150 Bremerton, WA ..... Kitsap, WA	1.0580
* * *	* *

[FR Doc. C3–24549 Filed 10–9–03; 8:45 am]

BILLING CODE 1505–01–D

Federal Register

Friday,
October 10, 2003

Part II

Environmental Protection Agency

40 CFR Part 131

Water Quality Standards for Oregon; Proposed Rule

ENVIRONMENTAL PROTECTION AGENCY

40 CFR Part 131

[FRL–OW–7570–3]

Water Quality Standards for Oregon

AGENCY: Environmental Protection Agency (EPA).

ACTION: Proposed rule.

SUMMARY: This document proposes use designations and temperature criteria for the protection of salmonids in Oregon waters, except in the Columbia River. This document also proposes an intergravel dissolved oxygen (IGDO) criterion to protect salmonid spawning wherever salmonid spawning is the designated use. In addition, this rule proposes methods to implement Oregon's existing antidegradation policy.

DATES: EPA will accept public comments on this proposed rule until November 10, 2003. EPA will consider comments postmarked after this date only to the extent that time permits. EPA is sponsoring three public hearings on today's proposed water quality standards for Oregon on October 22 (5 p.m. to 9 p.m.), October 23 (2 p.m. to 6 p.m.), and October 24, 2003 (10 a.m. to 1 p.m.).

ADDRESSES: Send your comments by mail to Valerie Badon, ORC–158, U.S. EPA Region 10, 1200 Sixth Avenue, Seattle, Washington 98101. Comments may also be submitted electronically, or through hand delivery/courier. Follow the detailed instructions as provided in section I.C. of the **SUPPLEMENTARY INFORMATION** section. The following public hearings will be held:

October 22 hearing: State of Oregon Building, 800 NE. Oregon Street, Portland, Oregon.

October 23 hearing: Eugene Public Library, 100 W. 10th Avenue, Eugene, Oregon.

October 24 hearing: Bend Community Center, 1036 NE. 5th Street, Bend, Oregon.

The administrative record for today's proposed rule is available for public inspection at EPA Region 10's Oregon Operations Office, 811 SW. 6th Avenue, 3rd Floor, Portland, Oregon 97204, between 8 a.m. and 4 p.m. Please call Tom Townsend at 503–326–3250 for appointments to review the record. A reasonable fee for copying will apply.

FOR FURTHER INFORMATION CONTACT: Mary Lou Soscia at U.S. EPA Region 10's Oregon Operations Office by phone at: 503–326–3250, or by e-mail at: *soscia.marylou@epa.gov*. You may also contact Cara Lalley at U.S. EPA Headquarters by phone at 202–566–0057, or by e-mail at: *lalley.cara@epa.gov*.

SUPPLEMENTARY INFORMATION: This supplementary information section is organized as follows:

I. General Information
A. Potentially Affected Entities
B. How Can I Get Copies of This Document and Other Related Information?
1. Docket
2. Electronic Access
C. How and to Whom Do I Submit Comments?
1. Electronically
2. By Mail
3. By Hand Delivery or Courier
D. What Should I Consider as I Prepare My Comments for EPA?
II. Background
A. What Are the Statutory and Regulatory Requirements Relevant to This Action?
B. What Actions Have Oregon and EPA Taken Leading to Today's Action?
III. What Federal Water Quality Standards is EPA Proposing Today?
A. Background
B. Federal Use Designations for Specific Water Body Segments
1. Background
2. Salmonid Use Designations
3. Specific Locations and Times for the Salmonid Uses
C. Temperature Criteria for Salmonid Uses
1. Background
2. EPA's Basis for the Proposed Numeric Criteria
3. Numeric Temperature Water Quality Criteria for EPA's Salmonid Use Designations
4. Alternative Criteria
D. IGDO Criterion for Salmonid Spawning
1. Background
2. EPA's Proposed IGDO Criterion
E. Antidegradation Implementation Methods
1. Background
2. Why is EPA Proposing Antidegradation Implementation Methods for the State of Oregon?
3. What Antidegradation Implementation Methods is EPA Proposing for the State of Oregon?
F. Effect of this Proposed Rule on the State's Water Quality Programs
IV. Economic Analysis
A. Identifying Affected Facilities
B. Method for Estimating Potential Compliance Costs
C. Results
D. Total Statewide Costs Associated with NPDES Permitted Facilities
E. Small Government and Business Analysis
V. Alternative Regulatory Approaches and Implementation Mechanisms
A. Background
B. Process for Federal Agencies Responsible for Federally Owned or Operated Dams to Request EPA Modify Water Quality Standards
C. Variances
D. Heat Load and Thermal Plume Provisions
E. EPA's Basis for Allowing Flexibility Due to Unusually Warm Weather Conditions
F. Total Maximum Daily Loads and Impaired Water Listings
VI. Statutory and Executive Order Reviews
A. Executive Order 12866: Regulatory Planning and Review
B. Paperwork Reduction Act
C. Regulatory Flexibility Act
D. Unfunded Mandates Reform Act of 1995
E. Executive Order 13132: Federalism
F. Executive Order 13175: Consultation and Coordination with Indian Tribal Governments
G. Executive Order 13045: Protection of Children from Environmental Health Risks and Safety Risks
H. Executive Order 13211: Actions that Significantly Affect Energy Supply, Distribution, or Use
I. National Technology Transfer and Advancement Act

I. General Information

A. Potentially Affected Entities

Citizens concerned with water quality in Oregon may be interested in this proposed rulemaking. Entities discharging pollutants to waters of the United States in Oregon could be indirectly affected by this rulemaking because water quality standards are used in determining water quality-based effluent limitations included in National Pollutant Discharge Elimination System (NPDES) permits. Categories and entities that may indirectly be affected include:

Category	Examples of Potentially Affected Entities
Industry	Industries discharging pollutants to surface waters in Oregon.
Municipalities ...	Publicly-owned treatment works discharging pollutants to surface waters in Oregon.

This table is not intended to be exhaustive, but rather provides a guide for readers regarding NPDES entities likely to be affected by this action. This table lists the types of entities that EPA is now aware could potentially be affected by this action. Other types of entities not listed in this table could also be affected. To determine whether your facility may be affected by this action, you should carefully examine today's rule. If you have questions regarding the applicability of this action to a particular entity, consult one of the persons listed in the preceding **FOR FURTHER INFORMATION CONTACT** section.

B. How Can I Get Copies of This Document and Other Related Information?

1. *Docket.* EPA has established an official public docket for this action at EPA Region 10's Oregon Operations Office, 811 SW. 6th Avenue, 3rd Floor, Portland, Oregon 97204, under Docket ID No. OW–2003–0068. The official public docket consists of the documents specifically referenced in this action, any public comments received, and other information related to this action. Although a part of the official docket, the public docket does not include Confidential Business Information (CBI) or other information whose disclosure is restricted by statute. The official public docket is the collection of materials that is available for public viewing under ID No. OW–2003–0068, or *Proposed Federal Water Quality Standards for Oregon*. The Docket Facility is open from 8 a.m. to 4 p.m., Monday through Friday, excluding legal holidays. Please call Tom Townsend at 503–326–3250 for appointments to review the record. A reasonable fee will be charged for copies.

2. *Electronic Access.* You may access this **Federal Register** document electronically through the EPA Internet under the ''Federal Register'' listings at *http://www.epa.gov/fedrgstr/*.

An electronic version of the public docket is available through EPA's electronic public docket and comment system, EPA Dockets. You may use EPA Dockets at *http://www.epa.gov/edocket/* to submit or view public comments, access the index listing of the contents of the official public docket, and to access those documents in the public docket that are available electronically. Once in the system, select ''search,'' then key in the appropriate docket identification number.

Certain types of information will not be placed in the EPA Dockets. Information claimed as CBI and other information whose disclosure is restricted by statute, which is not included in the official public docket will not be available for public viewing in EPA's electronic public docket. EPA's policy is that copyrighted material will not be placed in EPA's electronic public docket but will be available only in printed, paper form in the official public docket. To the extent feasible, publicly available docket materials will be made available in EPA's electronic public docket. When a document is selected from the index list in EPA Dockets, the system will identify whether the document is available for viewing in the EPA electronic public docket. Although not all docket materials may be available electronically, you may still access any of the publicly available docket materials through the docket facility identified in I.B.1. EPA intends to work towards providing electronic access to all of the publicly available docket materials through EPA electronic public docket.

For public commenters, it is important to note that EPA's policy is that public comments, whether submitted electronically or in paper, will be made available for public viewing in EPA's Electronic public docket as EPA receives them and without change, unless the comment contains copyrighted material, CBI, or other information whose disclosure is restricted by statute. When EPA identifies a comment containing copyrighted material, EPA will provide a reference to that material in the version of the comment that is placed in EPA's electronic public docket. The entire printed comment, including the copyrighted material, will be available through the docket facility identified in I.B.1.

Public comments submitted on computer disks that are mailed or delivered to the docket will be transferred to EPA's electronic public docket. Public comments that are mailed or delivered to the docket will be scanned and placed in EPA's electronic public docket. Where practical, physical objects will be photographed, and the photograph will be placed in EPA's electronic public docket along with a brief description written by the docket staff.

For additional information about EPA's electronic public docket, visit EPA Dockets online or see 67 FR 38102, May 31, 2002.

C. How and to Whom Do I Submit Comments?

You may submit comments electronically, by mail, or through hand delivery/courier. To ensure proper receipt by EPA, identify the appropriate docket identification number in the subject line on the first page of your comment. Please ensure that your comments are submitted within the specified comment period. Comments received after the close of the comment period will be marked ''late.'' While EPA is not required to consider these late comments, we will make every attempt to consider them.

1. *Electronically.* If you submit an electronic comment as prescribed below, EPA recommends that you include your name, mailing address, and an e-mail address or other contact information in the body of your comment. Also include this contact information on the outside of any disk or CD–ROM you submit, and in any cover letter accompanying the disk or CD–ROM. This ensures that you can be identified as the submitter of the comment and allows EPA to contact you in case EPA cannot read your comment due to technical difficulties or needs further information on the substance of your comment. EPA's policy is that EPA will not edit your comment, and any identifying or contact information provided in the body of a comment will be included as part of the comment that is placed in the official public docket, and made available in EPA's electronic public docket. If EPA cannot read your comment due to technical difficulties and cannot contact you for clarification, EPA may not be able to consider your comment.

i. *EPA Dockets.* Your use of EPA's electronic public docket to submit comments to EPA electronically is EPA's preferred method for receiving comments. Go directly to EPA Dockets at *http://www.epa.gov/edocket*, and follow the online instructions for submitting comments. To access EPA's electronic public docket from the EPA Internet home page, select ''Information Sources,'' ''Dockets,'' and ''EPA Dockets.'' Once in the system, select ''search,'' and then key in Docket ID OW–2003–0068. The system is an ''anonymous access'' system, which means EPA will not know your identity, e-mail address, or other contact information unless you provide it in the body of your comment.

ii. *E-mail.* Comments may be sent by electronic mail (e-mail) to *OW-Docket@epa.gov*, attention Docket ID No. OW–2003–0068. In contrast to EPA's electronic public docket, EPA's e-mail system is not an ''anonymous access'' system. If you send an e-mail comment directly to the docket without going through EPA's electronic public docket, EPA's e-mail system automatically captures your e-mail address. E-mail addresses that are automatically captured by EPA's e-mail system are included as part of the comment that is placed in the official public docket, and made available in EPA's electronic public docket.

iii. *Disk or CD–ROM.* You may submit comments on a disk or CD–ROM that you mail to the address identified in I.C.2. These electronic submissions will be accepted in WordPerfect or ASCII file format. Avoid the use of special characters and any form of encryption.

2. *By Mail.* Send your comments to: Valerie Badon, ORC–158, U.S. EPA Region 10, 1200 Sixth Avenue, Seattle, Washington 98101, Attention Docket ID No. OW–2003–0068.

3. *By Hand Delivery or Courier:* Deliver your comments to the address identified in I.C.2, Attention Docket ID No. OW–2003–0068. Such deliveries are only accepted between 8 a.m. and 4 p.m.

D. What Should I Consider as I Prepare My Comments for EPA?

You may find the following suggestions helpful for preparing your comments:

1. Explain your views as clearly as possible.
2. Describe any assumptions that you used.
3. Provide any technical information and/or data you used that support your views.
4. If you estimate potential burden or costs, explain how you arrived at your estimate.
5. Provide specific examples to illustrate your concerns.
6. Offer alternatives.
7. Make sure to submit your comments by the comment period deadline identified.
8. To ensure proper receipt by EPA, identify the appropriate docket identification number in the subject line on the first page of your response. It would also be helpful if you provided the name, date, and **Federal Register** citation related to your comments.

II. Background

A. What Are the Statutory and Regulatory Requirements Relevant to This Action?

The purpose of the Clean Water Act (CWA) is to restore and maintain the chemical, physical and biological integrity of the Nation's waters. Section 101(a)(2) of the CWA establishes as an interim goal ''water quality which provides for the protection and propagation of fish, shellfish, and wildlife and * * * recreation in and on the water,'' wherever attainable. This national goal is commonly referred to as the ''fishable/swimmable'' goal of the CWA. (Hereafter, the fishable/swimmable goals are referred to as CWA section 101(a) goal uses.) Section 303(c)(2)(A) requires State and Tribal water quality standards to ''protect the public health and welfare, enhance the quality of water, and serve the purposes of this Act.'' Further, States and authorized Tribes are required to take into consideration the waters' use and value for public water supplies, propagation of fish and wildlife, recreational purposes, and agricultural, industrial, and other purposes, and also take into consideration their use and value for navigation. 33 U.S.C. 1313(c)(2)(A). EPA's regulations at 40 CFR 131.10 describe the process States and authorized Tribes must follow and the analyses States must conduct prior to designating any uses that do not contain the CWA section 101(a) goal uses.

Section 303(c) of the CWA, 33 U.S.C. 1313(c), requires States and authorized Tribes to adopt water quality standards for waters of the United States within their applicable jurisdictions. Section 303(c) and EPA's implementing regulations at 40 CFR part 131 require State and Tribal water quality standards to include the designated use or uses to be made of the water, the criteria necessary to protect those uses, and an antidegradation policy. States and authorized Tribes may also include in their standards policies generally affecting the standards' application and implementation. See 40 CFR 131.13. These policies are subject to EPA review and approval. States and authorized Tribes are also required to review their water quality standards at least once every three years and, if appropriate, revise or adopt new standards. 33 U.S.C. 1313(c)(1). States and authorized Tribes are required to submit new or revised water quality standards to EPA for review and approval or disapproval. 33 U.S.C. 1313(c)(2)(A). If EPA approves a new or revised water quality standard submitted by a State or Tribe, it takes effect for CWA purposes. 40 CFR 131.21. If EPA disapproves a new or revised water quality standard submitted by a State or Tribe, EPA must promulgate its own water quality standard for the State or Tribe, when necessary to replace the disapproved water quality standards.

Finally, section 303(c)(4)(B) of the CWA authorizes the Administrator to determine, even in the absence of a State or Tribal submission, that a new or revised standard is needed to meet the CWA's requirements. The authority to make a determination under CWA section 303(c)(4)(B) resides exclusively with the Administrator; it has not been delegated.

Section 7 of the Endangered Species Act (ESA) requires Federal agencies, in consultation with the U.S. Fish and Wildlife Service (FWS) and the National Oceanic and Atmospheric Administration's National Marine Fisheries Service (NOAA Fisheries) (collectively, ''the Services''), to ensure that their actions are not likely to jeopardize the continued existence of any listed species or result in the destruction or adverse modification of habitat of such species which have been designated as critical. Consultation is designed to assist Federal agencies in complying with the requirements of section 7 by supplying a process within which FWS and NOAA Fisheries provide such agencies with advice and guidance on whether an action complies with the substantive requirements of the ESA. Approval of State or Tribal water quality standards and Federal promulgation of water quality standards are considered Federal actions, and hence EPA is required to comply with the requirements of ESA section 7 prior to taking final action on this proposed rule.

As a result of EPA's responsibilities and duties under section 7 of the ESA, EPA has initiated informal consultation with FWS and NOAA Fisheries on this rulemaking. As part of this process, EPA is preparing a biological assessment document that it will transmit to FWS and NOAA Fisheries and include in the record if this rule is finalized.

B. What Actions Have Oregon and EPA Taken Leading to Today's Action?

On July 23, 1996, the State of Oregon submitted revisions to its water quality standards to EPA for review, and approval or disapproval, pursuant to CWA section 303(c)(2)(A). Certain of these revisions identified specific numeric temperature criteria to protect critical life stages of fish in the family *Salmonidae,* commonly known as ''salmonids.'' The *Salmonidae* family includes the genus *Oncorhynchus,* which consists of Pacific salmon and trout. There are seven species of Pacific salmon within the genus *Oncorhynchus,* five of which are found in North America: pink (*O. gorbuscha*), chum (*O. keta*), sockeye (*O. nerka*), coho (*O. kisutch*), and chinook (*O. tshawytscha*). Pacific trout within the genus *Oncorhynchus* include the anadromous steelhead, *O. mkiss,* and coastal cutthroat, *O. clarki. clarki;* and the non-anadromous rainbow trout, *O. mkiss.* Also in the family *Salmonidae* is the genus *Salvelinus,* which includes the bull trout species, *confluentus.*

Oregon's 1996 revised temperature criteria were intended to protect salmon rearing (17.8°C/64°F), salmon spawning (12.8°C/55°F), and bull trout (10°C/50°F). This included a revised temperature criterion for salmonid rearing in the Lower Willamette River from 21°C/70°F to 20°C/68°F. Oregon also submitted an IGDO criterion of 6.0 milligrams per liter (mg/L) for the protection of salmonid spawning. In addition, Oregon adopted new or revised narrative criteria and other provisions establishing a process for adopting site-specific numeric criteria or temporary revisions to its standards.

On September 15, 1998, EPA entered into formal consultation under section 7(a)(2) of the ESA with both NOAA Fisheries and FWS with regard to the effect of its approval decision regarding the new or revised standards on listed and endangered species including chinook, coho, sockeye, chum, coastal cutthroat, steelhead, and bull trout. On July 1, 1999, FWS issued a biological opinion that EPA's approval of the State's standards revisions was not likely to jeopardize the continued existence of listed threatened and endangered species, including bull trout. On July 7, 1999, NOAA Fisheries issued a biological opinion that EPA's approval of the standards revisions was not likely to jeopardize the continued existence of listed threatened and endangered species. Included on the Services' lists of threatened and endangered species were:

- Snake River Sockeye Salmon;
- Upper Columbia River spring chinook salmon;
- Upper Columbia River steelhead;
- Snake River spring/summer, Snake River fall, Upper Willamette River, Lower Columbia River, and Southern Oregon/California Coastal chinook salmon;
- Oregon Coast and Southern Oregon/ Northern California coho salmon;
- Snake River Basin, Middle and Lower Columbia, Upper Willamette, Oregon Coast, and Klamath Mountains Province steelhead trout;
- Columbia River Chum Salmon;
- Umpqua River coastal cutthroat trout;
- Southwestern Washington/ Columbia River coastal cutthroat trout; and
- Columbia River Basin and Klamath River Basin Bull Trout.

As part of the consultation action, EPA and the State of Oregon also committed to perform specific conservation measures under section 7(a)(1) of the ESA. These measures were designed to address the Services' and EPA's concerns regarding Oregon's water quality standards and also to further investigate uncertainties regarding the water temperatures necessary to protect specific life stages of endangered salmonid species.

On July 22, 1999, EPA approved all but one of the revised water quality standards submitted by Oregon, including the new and revised temperature, pH, dissolved oxygen, and bacteria standards. EPA disapproved the 20°C/68°F numeric criterion for salmonid rearing in the lower Willamette River because the State did not include a justification for how 20°C/ 68°F would protect salmonid rearing in view of record information showing that 20°C/68°F is not protective of salmonid rearing. (Letter to Michael Llewelyn, Oregon Department of Environmental Quality, from Randall Smith, EPA, July 22, 1999; Memorandum to Randy Smith from Dru Keenan regarding Recommended Action, July 21, 1999). At that time, EPA took no action with respect to Oregon's existing water quality criteria for the Columbia River or its antidegradation implementation plan because Oregon had not submitted new or revised water quality standards for review on either matter.

One of the conservation measures in NOAA Fisheries' biological opinion required EPA to establish and lead a region-wide effort to conduct a comprehensive review of the temperature requirements of critical life stages of salmonids in the Pacific Northwest, and ultimately to issue guidance recommending temperature criteria for their protection, which could be used as a basis for further revision of Oregon's standards if warranted. The reason for this conservation measure was that during the formal consultation process, it became evident to EPA, NOAA Fisheries, and FWS, and others that there was scientific uncertainty regarding the precise effects of various temperature regimes on the life stages of threatened and endangered salmonids. This three year effort concluded in April 2003 with the issuance of the ''EPA Region 10 Guidance for Pacific Northwest State and Tribal Temperature Water Quality Standards' (hereafter identified as the Temperature Guidance).

Both EPA's approval action and NOAA Fisheries' Biological Opinion of ''no jeopardy'' were challenged in 2001 by Northwest Environmental Advocates in the U.S. District Court for the District of Oregon. *Northwest Environmental Advocates* v. *EPA & NMFS,* 268 F.Supp.2d 1255 (D. Or., Mar. 31, 2003). The plaintiff also alleged that EPA had a non-discretionary duty to promulgate Federal water quality criteria for temperature for the lower Willamette River and the Columbia River, and to promulgate an implementation plan for Oregon's antidegradation policy.

On March 31, 2003, the U.S. District Court in Oregon ruled that EPA had violated the CWA and the ESA when it approved in 1999 certain water quality standards for the protection of salmonids that were contained in Oregon's 1996 submission. Although the court deferred to EPA's scientific judgment regarding the protectiveness of the specific numeric temperature criteria, the court found that the temperature standards that EPA approved violated EPA's regulations and EPA's duty under section 7 of the ESA because Oregon had failed to designate ''where and when'' these criteria would apply. The court directed EPA to rescind its approval of the criteria because the absence of ''time and place'' use designations failed to protect the use categories created by Oregon, in this case salmonid rearing, bull trout rearing and bull trout spawning. The court directed EPA to propose and promulgate new temperature water quality standards, or approve new State standards, to address this deficiency.

The court also directed EPA to rescind its approval of a water quality criterion for intergravel dissolved oxygen for the protection of salmonid spawning. The court found that EPA's approval of the 6.0 mg/L criterion adopted by Oregon was arbitrary and capricious based on record information showing that 6.0 mg/L would not adequately protect salmonid spawning and because Oregon had not made time and place use designations where the criterion would apply. Thus, the court ordered EPA to promulgate a new water quality criterion for this pollutant parameter or approve a new State criterion. The court also ordered EPA to promulgate an antidegradation implementation plan for Oregon waters or approve such a plan promulgated by Oregon. Finally, the court also found arbitrary and capricious NOAA Fisheries' determination that Oregon's water quality standards for temperature and IGDO would not jeopardize threatened and endangered species.

The court ruled in favor of EPA regarding the Plaintiff's challenge to EPA's failure to establish Federal water quality criteria for temperature for the Columbia River for migration and rearing. EPA also successfully defended EPA's decision to approve certain narrative water quality criteria. Finally, the court agreed that EPA had met its obligations under ESA section 7(a)(1) to implement programs to conserve threatened salmon.

On August 13, 2003, the court ordered EPA to sign proposed regulations by October 1, 2003, and either sign final regulations or approve new State regulations by March 2, 2004, for the following:

(a) Water quality criteria for temperature for the lower Willamette River;

(b) Methods for implementing the antidegradation policy adopted by Oregon, pursuant to 40 CFR 131.12;

(c) Numeric water quality criteria for temperature for the protection of salmonid rearing and bull trout rearing

and spawning, accompanied by specific time and place designations for waters of the United States in Oregon; and

(d) A water quality criterion for intergravel dissolved oxygen for Oregon's waters for the protection of salmonid spawning in waters of the United States in Oregon.

EPA's usual practice when promulgating a water quality standard is to provide an opportunity for a public hearing, provide the public with 45 days notice of the hearing, and establish a public comment period that extends at least until the date of the hearing. 40 CFR 25.5(b). However, the regulations also allow for a shorter comment period and a shorter period of public notice prior to the hearing when necessary to accommodate the specific provisions of court orders. EPA is providing a 30-day comment period from the date of publication. EPA believes a 30-day comment period is reasonable in this case for several reasons. First, EPA is compelled by court order to take final action on this proposal by March 2, 2004. That schedule precludes a longer comment period. Second, a significant portion of the water quality standards being proposed today has already been the subject of considerable public input in connection with the Temperature Guidance. In the course of developing that guidance, which EPA Region 10 issued in April 2003, EPA published and considered public comment on two drafts and engaged in considerable stakeholder communication. With the exception of the use designations and antidegradation implementation procedures proposed today, all aspects of today's proposed rule were the subject of extensive public input in that context. Therefore, the public has already had several months to consider the substance of these proposed decisions.

In this document, EPA is not proposing any time and place designations for the Columbia River. Oregon had not submitted and EPA had not disapproved water quality criteria for temperature or use designations for salmonid migration and rearing for the Columbia River. Therefore, the court did not require EPA to propose and promulgate such water quality standards for the Columbia River. Accordingly, EPA is not proposing time and place designations for salmonid spawning for the Columbia River. The court did hold that EPA's approval of the State's IGDO criterion to protect salmonid spawning was arbitrary and capricious based on record information showing that 6.0 mg/L would not adequately protect salmonid spawning and because Oregon had not made time and place use designations where the criterion would apply. Thus, the court order requires EPA to propose IGDO criteria wherever salmonid spawning is the designated use in Oregon. Therefore, the proposed IGDO criterion would apply to all waters identified in section 131.39(b) for salmonid spawning. In addition, for the Columbia River, the State of Oregon has identified the times and places where salmonid spawning occurs and, therefore, the IGDO criterion would apply to those places in the Columbia River (Letter to Randall Smith, EPA, from Michael Llewelyn, ODEQ, September 5, 2003).

EPA is proposing these regulations under authority of CWA section 303(c)(4)(A), which requires EPA to promptly prepare and publish proposed Federal water quality standards when EPA disapproves new or revised water quality standards submitted by a State. On September 29, 2003, EPA disapproved the following new or revised water quality standards submitted by Oregon in 1996:

- The water quality criteria for temperature for the protection of salmonid rearing;
- The water quality criteria for temperature for the protection of bull trout spawning, rearing, and migration;
- The water quality criteria for temperature for the protection of salmonid spawning; and
- The water quality criterion for intergravel dissolved oxygen for the protection of salmonid spawning.

A copy of the disapproval decision may be found in the docket for this proposed rule.

In making its disapproval decision, EPA relied on the reasoning of the U.S. District Court for the District of Oregon when it ordered EPA to rescind its 1999 approval of certain Oregon temperature and IGDO standards. In its March 2003 order, the court stated that without accurate time and place use designations, Oregon's 1996 criteria for temperature and IGDO were inconsistent with the CWA and should not have been approved.

Accordingly, EPA has disapproved these criteria to the extent that Oregon had failed to determine when and where these criteria apply (Letter from Randall F. Smith, Director of EPA Region 10's Office of Water, to Mike Llewelyn, Director of Oregon Department of Environmental Quality, September 29, 2003). Where Oregon has made time and place use determinations under its regulations (*e.g.*, the Columbia River for salmonid spawning), EPA's 1999 approval decision remains in effect. Under those circumstances, the State's time and place use determinations apply for CWA purposes, and EPA is not proposing Federal time and place designations for those waters in this rulemaking.

In developing this proposed rule, EPA sought advice from other Federal agencies, including those that administer the ESA and those that operate dams in Oregon. Their comments improved the clarity of the proposal, resulted in EPA deciding to solicit comment in some additional areas, aided EPA in developing standards that would be protective of endangered salmon and trout, and, prompted EPA to better articulate for owners and operators of Federal dams the information needs and process associated with petitioning for changes in use designations. EPA appreciates the input of these agencies.

III. What Federal Water Quality Standards Is EPA Proposing Today?

A. Background

In this document, EPA is proposing (1) designated uses to protect migration, rearing, and spawning through fry emergence for salmonids; (2) specific water bodies where those designated uses would apply, and the times of year when the uses occur; (3) temperature criteria that protect each of those designated uses; (4) an IGDO criterion that protects salmonid spawning; and (5) an implementation plan for Oregon's existing antidegradation policy.

The basis for EPA's proposed salmonid uses and associated temperature criteria is the Temperature Guidance, contained in the record for this rule. The Temperature Guidance is intended to assist States and authorized Tribes in adopting scientifically-defensible temperature water quality standards. The Temperature Guidance recommends an approach for adopting temperature water quality standards to protect cold-water salmonids and specifically addresses the following cold-water salmonid species in the Pacific Northwest: chinook, coho, sockeye, chum, and pink salmon; steelhead and coastal cutthroat trout; and bull trout. The Temperature Guidance provides recommendations to States and authorized Tribes on how they can designate uses and establish numeric temperature criteria for waterbodies that help meet the interim goal of the CWA to, where attainable, provide for water quality that ''provides for the protection and propagation of fish, shellfish, and wildlife and recreation in and on the water.'' *See* CWA section 101(a)(2). In addition, temperature water quality standards are viewed by EPA and the Services as an

important tool for the protection and recovery of threatened and endangered salmonid species in the Pacific Northwest. Attaining criteria and protecting existing cold temperatures for waters used by these salmonids will help maintain and improve their habitat and aid in their protection and recovery.

As mentioned above, EPA Region 10 undertook the Temperature Guidance project as a result of the commitments agreed to under the ESA Biological Opinion issued by the Services on Oregon's temperature water quality standards. EPA Region 10 also undertook this project because EPA's CWA section 304(a) national criteria recommendations for temperature found in ''Quality Criteria for Water 1986,'' commonly known as the Gold Book, were established in 1977, and do not reflect the most current science regarding temperature in the Pacific Northwest. In general, the Gold Book temperature recommendations for salmonids and other fish consist of formulas to calculate the protective temperatures for short-term exposure and a maximum weekly average exposure based on the maximum weekly average temperature metric. Protective short-term temperature exposure is based on subtracting 2°C/4°F from the upper incipient lethal temperature. Protective weekly average temperature exposure is based on the optimal growth temperature plus one-third of the difference between the optimal growth temperature and the upper incipient lethal temperature. Using these formulas and EPA data for coho and sockeye salmon, the 1986 document calculates suggested temperature criteria for short-term exposure as 22°C/71.6°F (sockeye) and 24°C/75.2°F (coho) and a maximum weekly average exposure of 18°C/64°F for both species.

Based on extensive review of the most recent scientific studies, many of which were undertaken specifically for the Pacific Northwest, EPA and the Services believe that there are a variety of chronic (long-term) and sub-lethal effects (*i.e.*, effects other than death) that are likely to occur to Pacific Northwest salmonid species exposed to the maximum weekly average temperatures calculated using the CWA section 304(a) national recommended formulas. These chronic and sub-lethal effects include reduced juvenile growth, increased incidence of disease, reduced viability of gametes in adults prior to spawning, increased susceptibility to predation and competition, and suppressed or reversed smoltification. Healthy fish populations could possibly endure some of these chronic impacts with little appreciable loss in population size. However, EPA and the Services are concerned that these chronic and sub-lethal effects can reduce the overall health and size of vulnerable fish populations, such as the endangered or threatened salmonids of the Pacific Northwest. Based on the new scientific studies developed specifically for the Pacific Northwest and the fact that the fish populations at issue are already vulnerable for reasons unrelated to temperature, EPA believes that the general assumptions upon which the national recommendations are based are inapplicable here. In particular, EPA is concerned that vulnerable coldwater salmonids in the Pacific Northwest would not be adequately protected at water temperatures selected between the optimal growth temperatures and the higher temperatures at which there would be incipient lethality. For these reasons, EPA is basing today's proposed rule on the more recent, site-specific information and analyses contained in the 2003 Temperature Guidance, rather than on the 1986 CWA section 304(a) national temperature criteria recommendations.

B. Federal Use Designations for Specific Water Body Segments

1. Background

Today, EPA is proposing to designate the same salmonid uses recommended in the Temperature Guidance with a few exceptions discussed in the preceeding paragraphs. Four of the five designated salmonid uses that EPA is proposing are based on the salmonid uses that occur during the period of summer maximum temperatures, which is generally during July and August. EPA believes it is appropriate to primarily base designated salmonid uses on summer salmonid use because: (1) human activities that increase summer water temperatures are a significant concern for salmonids in the Pacific Northwest, and (2) ensuring water temperatures are protective of salmonid uses during the summer will generally result in protective water temperatures for salmonids other times of the year due to the fact that waters will naturally be cooler during other months of the year. However, for some waters, attaining the criteria to protect for a summertime salmonid use may not result in protecting salmonid spawning and fry emergence that occurs in the spring to early summer or late summer to fall. Thus, in addition to the four summer salmonid designated uses, EPA is also proposing a use designation specifically for salmon and steelhead spawning through fry emergence, which typically occurs beginning in the fall and continuing through the spring, but can also occur in early July for steelhead and late August for chinook. Designating this use and associated water quality criteria provides an added degree of protection where meeting only the summer maximum temperature may be inadequate to ensure protection of this use during the other times of the year when spawning occurs.

In this document, EPA is proposing salmonid uses and associated temperature and IGDO water quality criteria for the waters identified. Water quality criteria often protect water bodies that have multiple and competing uses. Federally-owned or operated dams in certain waters may present a particular challenge in designating uses and establishing water quality criteria. In cases such as this, water quality standards should take into consideration the authorized purposes of Federally-owned or operated dams. EPA, therefore, will take into consideration the operational parameters and authorized purposes at these facilities when developing Federal water quality standards for the State of Oregon, to the extent time and availability of data permit. If data become available prior to promulgation of the final rule demonstrating that a proposed use is not attainable on a particular water body impacted by a Federally-owned or operated dam, EPA may promulgate a revised use that reflects the highest feasibly attainable use consistent with the operation of the dam. Designated uses should be deemed ''feasible'' if they can be implemented by a dam in a manner that allows the dam to perform its authorized purposes. Because these standards are being developed on an expedited schedule, and it may not be possible to fully consider data on attainability of uses for all water bodies potentially impacted by Federally-owned or operated dams, EPA is also proposing a process by which Federal agencies responsible for Federally-owned or operated dams may request that EPA modify the water quality standards described in this proposed rule. *See* section V.B.

For each of the uses proposed in section III.B.2, EPA requests comment on its methodology for designating waters for those uses, and on the specific use designations for waters identified on the maps available on the Internet at *http://www.epa.gov/r10earth/federaloregonwqs.htm,* or in hard copy at U.S. EPA Region 10's Oregon Operations Office, 811 SW. 6th Avenue, 3rd Floor, Portland, Oregon 97204.

2. Salmonid Use Descriptions

i. Bull Trout Juvenile Rearing and Spawning. EPA is proposing a bull trout juvenile rearing and spawning use for the waters identified in the maps previously referenced. This use is intended to protect moderate to high-density summertime bull trout juvenile rearing near their natal streams in their first years of life prior to making downstream migrations, and bull trout spawning through fry emergence typically occurring from the fall through the spring in the same waters. In general, EPA is proposing this use in the upper reaches of the applicable river basins, where this use typically occurs.

ii. Salmon and Steelhead Core Juvenile Rearing. EPA is proposing a salmon and steelhead core (moderate- to high-density) juvenile rearing use for the waters identified in the maps previously referenced. This use is intended to protect core salmon and steelhead juvenile rearing that occurs in the summer. This use is generally found in a river basin's mid-to-upper reaches, downstream from juvenile bull trout rearing areas. Protection of these waters for salmon and steelhead juvenile rearing also provides protection for adult spring chinook salmon that ''hold'' (wait in a river reach) throughout the summer prior to spawning, and for migrating and foraging adult and sub-adult bull trout, which also frequently use these waters.

iii. Salmon and Trout Juvenile Rearing and Migration. EPA is proposing a salmon and trout juvenile rearing and migration use for the waters identified in the maps previously referenced. This use is intended to protect salmon and steelhead (trout) moderate- to low-density juvenile rearing and migration, during the period of summer maximum temperatures. During the rest of the summer and other months of the year, salmon and steelhead juvenile rearing and migration is likely to be of higher density. This use designation reflects the fact that salmon and steelhead juveniles will use waters during the summer that have higher temperatures than their optimal thermal range. Salmon and trout juvenile rearing and migration is generally found in the middle and lower part of a basin, downstream of the salmon and steelhead core rearing use. In many river basins in Oregon, this use extends all the way to a river basin's terminus (*i.e.*, confluence with the Columbia River, Snake River or Pacific Ocean). EPA is also proposing salmon and trout juvenile rearing and migration use to protect for general juvenile rearing for resident rainbow trout.

iv. Salmon and Steelhead Migration. EPA is proposing a salmon and steelhead migration use for the lower Willamette River (50 miles upstream from the confluence with the Columbia River), the John Day River (from the confluence with the North Fork River downstream to the confluence with the Columbia River), and the portion of the Snake River in Oregon (from the Washington-Oregon border to Hells Canyon Dam).

Salmon and steelhead migration occurs all year, but primarily in the spring and early summer or in the late summer and fall. Although fewer fish migrate during the summer maximum time period, migration is the most prevalent life stage use that occurs during that period in these waters. Some isolated salmon and steelhead juvenile rearing may occur in these waters during the period of summer maximum temperatures, but when it does, such rearing is usually found only in the confluence of colder tributaries or other areas of colder waters.

The summer maximum temperature criterion is designed to protect migration both during that time period and, more importantly, during other times of the year when the majority of migration occurs. This is because the criterion assures that the water temperatures stay cool enough in the summer that the natural seasonal cooling that occurs during other times of year results in achievement of temperatures that are protective of migration.

v. Salmon and Steelhead Spawning Through Fry Emergence. EPA is proposing to designate a spawning through fry emergence use for the protection of salmon and steelhead trout spawning, egg incubation, and fry emergence in the times and places indicated on the maps previously mentioned. Generally, these life stages occur: (a) From late winter through early summer for steelhead trout (mid-upper reaches); (b) from the late summer-fall through spring for spring chinook (mid-upper reaches); and (c) from the fall through spring for coho (mid-reaches), chum, and fall chinook (the latter two in lower reaches).

vi. Other Salmonid Uses Considered. EPA considered designating separate salmonid uses for (a) bull trout spawning and (b) steelhead smoltification. For purposes of this proposed rule, however, EPA determined that these uses can be protected by the temperature criteria associated with other salmonid uses EPA is proposing today. See Temperature Guidance p. 31. For bull trout spawning, EPA believes that its proposed ''bull trout rearing and spawning'' use category will be protective, and for steelhead smoltification, EPA believes that its proposed use category, ''salmon and steelhead spawning through fry emergence'' will be protective.

Bull trout generally spawn in the late summer and fall in the same waters where young and resident juvenile bull trout rear. EPA decided that a combined bull trout spawning and rearing use with a single numeric temperature criterion (12°C/54°F) that limits summer maximum temperatures would protect both the rearing that occurs year-round and the spawning, egg incubation, and fry emergence that generally occurs fall through spring. EPA proposes this approach for two reasons. First, data indicate that if the summer maximum temperature is 12°C/54°F, temperatures will naturally decrease to levels that are protective of bull trout spawning (9°C/48°F) when it occurs in the late summer and fall, and further decrease to protect egg incubation (2–6°C/36–43°F) when it occurs over the winter. Second, there may be some areas where bull trout spawn in the summer, but in those situations, the existing summer maximum temperatures are likely to be colder than 12°C/54°F and in those situations the existing cold water alternative criterion discussed in section III.C.vi.b. would apply and the applicable criterion would be the existing maximum temperatures.

Salmon and steelhead smoltification occurs in the spring as these fish migrate to the ocean and go through the adaptation process for saltwater. Steelhead are believed to be the most temperature-sensitive salmonids during smoltification, which is why a separate designated use and criterion of 14°C/57°F was recommended in the Temperature Guidance. EPA believes that its proposed water quality criteria for temperature and associated designated uses would effectively protect steelhead smoltification. In particular, the proposed salmon and steelhead spawning through fry emergence use designation includes a 13°C/55°F criterion that would apply from the fall through the spring until either May 15th or June 15th in nearly all the waters where steelhead smoltification occurs.

3. Specific Locations and Times for the Salmonid Uses

EPA, in coordination with the Oregon Department of Environmental Quality (ODEQ) and the Services, established an interagency team to designate where and when the salmonid uses described above apply for waters in the State of

Oregon. These proposed salmonid use designations are shown in the previously mentioned maps (available on the Internet at *http://www.epa.gov/r10earth/federaloregonwqs.htm* or in hard copy at U.S. EPA Region 10's Oregon Operations Office, 811 SW., 6th Avenue, 3rd Floor, Portland, Oregon 97204). The salmon and steelhead spawning through fry emergence use is designated only for the time period indicated in the map legends; all other identified designated uses apply throughout the year.

EPA is proposing multiple use designations for certain waters where the criterion applicable to the most sensitive use also protects a less sensitive use. Where EPA proposes to designate bull trout rearing and spawning, EPA is also proposing to designate salmon and steelhead core juvenile rearing. Where EPA is proposing salmon and steelhead core juvenile rearing, EPA is also proposing to designate salmon and trout juvenile rearing and migration. Where EPA proposes salmon and trout juvenile rearing and migration, EPA also proposes salmon and steelhead migration. EPA notes that the maps indicate only the most sensitive use that occurs during the period of maximum summer temperatures. Also, EPA notes that its approach of defining uses that occur during the period of summer maximum temperatures will also have the effect of protecting other uses. If the most sensitive use designated for a particular water body or segment no longer applies, then the less sensitive use would apply.

In proposing the designated uses for the specified water bodies the team primarily relied on a database developed by Oregon Department of Fish and Wildlife (ODFW), which is available in the record and on the Internet. (ODFW Database, *http://osu.orst.edu/dept/nrimp/information/fishdistdata.htm).* This database was the product of an ODFW multi-year effort to develop consistent and comprehensive fish distribution data for a number of salmonid species. These distribution data represent the known or probable presence of all salmonid species within the anadromous zones of Oregon. ODFW compiled fish distribution information from a variety of sources including State and Federal fishery agencies, tribal entities, watershed councils and other interested public or private groups.

The ODFW fish distribution data depict the known or probable presence for the different life stages (*i.e.*, spawning through fry emergence, rearing, and migration) of the above listed salmonid species. The ODFW fish distribution data reflect both waters with known fish life stage presence based on documented observations, as well as local field biologists' best professional judgment as to where a life stage use is likely to occur based on suitable habitat (*i.e.*, waters near areas of documented life stage presence on the same waterbody that have similar temperatures and geomorphological habitat features, such as flow volume, gradient, gravel size, pool frequency, and no known obstructions or reasons why uses would not also be present in these waters). The ODFW fish distribution data reflect areas of fish use based on information collected over the past five life cycles for a particular species, which ranges from 15 to 35 years.

In addition to spatial fish distribution data that describe where a life stage use is known or likely to occur, the ODFW database also includes information describing when a life stage use is known or likely to occur.

EPA believes the methodology ODFW used to develop its database, as summarized above, is scientifically sound and is appropriate to use for salmonid use designations. (1:24K Fish Habitat Distribution Development Project Procedures Manual, Oregon Department of Fish and Wildlife, February 26, 2002). In particular, the ODFW database is based on fish presence information spanning multiple years and includes waters where fish are likely to occur based on locations near areas with documented life stage presence and suitable habitat. This approach is appropriate because salmonid use designations based solely on areas of documented presence does not sufficiently describe the actual waters of use due to the practical limitations of monitoring every stream mile, and routine fish monitoring sometimes indicates no fish presence when fish are actually present (*i.e.*, false negatives). Further, fish distributions vary year to year for any given waterbody, so salmonid use designations should be based on fish presence studies over multiple years. EPA requests comment on its use of the ODFW database as its primary source of fish distribution data.

EPA also relied upon three other sources of information to identify the proposed salmonid designated uses: ODEQ's *Bull Trout Habitat Designation Report: Technical Work Group Recommendations* (July 2003); USFWS proposed critical habitat for bull trout spawning and juvenile rearing (67 FR 71236, November 29, 2002); and Ecotrust's Salmon Anchor Habitat Strategy for the Tillamook and Clatsop State Forests, October 2002 (*http://www.inforain.org/mapsatwork/anchorhabitats/*).

As noted above, EPA, the State of Oregon, and the Services developed an agreed-upon methodology to define where and when the different proposed salmonid uses would apply based on the ODFW database and the other information described above. The following is a summary of the approach used to identify each of the proposed salmonid designated uses.

i. Bull Trout Juvenile Rearing and Spawning. EPA reviewed three different information sources that identify bull trout spawning and juvenile rearing habitat in Oregon: (1) ODEQ's *Bull Trout Habitat Designation Report: Technical Work Group Recommendations,* (2) ODFW database for bull trout juvenile rearing and spawning habitat, and (3) FWS' proposed critical habitat for bull trout juvenile rearing and spawning. These three data sources are consistent in defining areas of known or probable bull trout juvenile rearing and spawning. The ODEQ report and the FWS proposal referenced previously also identify habitat areas that have the potential to support bull trout juvenile rearing and spawning and are essential to the conservation of the bull trout species. EPA believes it is appropriate to designate areas identified as potential bull trout rearing and spawning habitat because in order to protect the bull trout use in the State, there must be a critical population to (1) provide a compensatory reserve to protect against natural stresses and events (*e.g.*, drought); and (2) protect against ''depensation'' [a population level that is so low that it experiences decreases in recruitment and which has led to documented crashes in certain fish populations (Rieman and McIntyre, 1993)]; and (3) ensure that genetic diversity is sufficient to support healthy reproduction. EPA requests comment on its proposal to designate areas of potential as well as known or probable bull trout juvenile rearing and spawning use. ODEQ's report was translated into a Geologic Information System (GIS) database by ODEQ; EPA primarily used this information supplemented by FWS's proposed critical habitat information to identify where this designated use is proposed.

EPA proposes to designate a bull trout rearing and spawning use for: (a) Waters classified in ODEQ's report as known bull trout spawning and juvenile rearing habitat (BTHD1) and potential bull trout spawning and juvenile rearing habitat necessary for long-term health and viability of bull trout populations

(BTHD3), (b) any additional waters identified by FWS as bull trout spawning and rearing proposed critical habitat, and (c) all waters upstream of the areas (as indicated on the use designation maps) identified in (a) and (b) except for a few relatively large tributaries where EPA has data showing this use does not occur, or the water body has not been identified as habitat needed to protect the designated use of bull trout. EPA requests comment on its methodology for designating waters for the bull trout juvenile rearing and spawning use and on the specific waters identified.

ii. Salmon and Steelhead Core Juvenile Rearing. In developing this proposal, EPA judged that the ODFW database could not be used to differentiate core (high-density) juvenile rearing from non-core (low-density) juvenile rearing. In addition, there is generally very little available information on juvenile rearing density for Oregon's river basins. Therefore, as recommended in the Temperature Guidance, EPA elected to use surrogate information to help identify areas where summertime core salmon and steelhead juvenile rearing is likely. Waters used by spring chinook to spawn in the late summer months (August through mid-September), waters used over the summer by migrating and foraging adult bull trout, and waters upstream of these areas are likely to also support and be used for core salmon and steelhead juvenile rearing for two reasons. First, ODFW's database indicates juvenile rearing occurs in these waters, and second, the temperatures needed for core rearing are similar to those that occur in waters that support adult spring chinook holding to spawn as well as those that support migrating and foraging adult bull trout. See EPA Temperature Guidance.

The Ecotrust study on anchor habitat in the North Coast Basin was one juvenile rearing density study EPA relied upon to identify waters where the salmon and steelhead core juvenile rearing designated use should be proposed. This study identified areas of core juvenile rearing habitat for coho (salmon), steelhead (trout), and chinook (salmon). Use of this information resulted in EPA proposing that three stream segments be designated for salmon and steelhead core juvenile rearing in the North Coast Basin (Necanicum River, Ecola Creek and Plympton Creek) where there is no spring chinook spawning. Most of the waters identified in this study were also waters where the ODFW database showed spring chinook spawning to occur in or upstream of these areas.

In summary, EPA is proposing to designate a salmon and steelhead core juvenile rearing use for: (a) Waters where ODFW distribution and timing information shows chinook spawning occurs on or prior to September 15; (b) waters where known or probable adult bull trout migration and foraging occurs in July or August based on the ODFW database; (c) waters where scientifically credible information (specifically the Ecotrust study) shows core salmon or steelhead rearing (such information was only available for the North Coast Basin); and (d) all waters upstream of the waters identified in (a), (b), or (c), except for a few relatively large rivers where the information in (a), (b) and (c) showed that these life stages are not occurring in the river and the designation is not necessary to ensure delivery of cold water downstream.

EPA requests additional scientifically-credible data or information regarding core juvenile rearing areas that it could use to identify those waters where this use should be designated. In particular, EPA seeks information on coho and steelhead juvenile rearing density and timing. EPA would consider such data or information in EPA's final use designations.

Other data and information that may be appropriate for commenters to review and evaluate EPA's designated uses include: (1) Waters identified by ODFW as juvenile rearing habitat where ODEQ monitoring data from any year shows that maximum water temperatures are at or below 16°C/61°F (the proposed numeric criterion for this use); (2) waters identified by ODFW as juvenile rearing habitat where ODEQ temperature modeling indicates maximum water temperatures can meet 16°C/61°F; (3) information from NOAA Fisheries describing critical sub-populations; (4) ODFW information on high density spawning areas; and (5) waters above a certain elevation that are identified by ODFW as steelhead and/or coho juvenile rearing with no chinook rearing. Use of this data could potentially increase the number of waters for which EPA promulgates the salmon and steelhead core juvenile rearing designated use.

Although EPA is soliciting additional data or information that may be helpful in designating this use, EPA believes the water bodies EPA is proposing to designate for salmon and steelhead core juvenile rearing provide sufficient spatial coverage to protect this use. As can be seen by viewing the use designation maps, EPA is proposing to designate salmon and steelhead core juvenile rearing for significant portions of each basin. EPA, after discussions with NOAA Fisheries, believes it is important for each existing salmon and steelhead population to have a portion of their rearing habitat designated for this use. EPA believes it has achieved this by designating this use for a portion of most of the sub-basins in each of Oregon's basins used by salmon and steelhead.

It is also important to recognize that waters EPA is proposing to designate as salmon and trout juvenile rearing and migration use (See section III.B.2.iii) with an associated 18°C/64°F criterion, will provide a significant amount of water with 16°C/61°F maximum temperatures that support salmon and steelhead core juvenile rearing because attaining 18°C/64°F in the lower elevation waters will require that a significant portion of the upstream waters be colder than 18°C/64°F. Thus, EPA believes that the salmon and trout juvenile rearing and migration summer maximum criterion will, in effect, protect additional upstream waters for salmon and steelhead core juvenile rearing. EPA requests comment on its methodology for identifying waters for the salmon and steelhead core juvenile rearing use and on the specific waters identified.

iii. Salmon and Trout Juvenile Rearing and Migration. EPA proposes to designate a salmon and trout juvenile rearing and migration use for: (a) Waters where ODFW distribution and timing information shows chinook, chum, coho or steelhead rearing occurring in July or August; (b) waters where ODFW distribution information shows rainbow trout rearing use; and (c) all waters upstream of the waters identified above. The data and information supporting these determinations is contained in the ODFW database.

iv. Salmon and Steelhead Migration. EPA proposes to designate a salmon and trout migration use for waters where ODFW distribution and timing information indicates there is no rearing use in July or August or information suggests a lower mainstem river is primarily a migration corridor during the period of summer maximum temperatures, and there is evidence that temperatures naturally reach or exceed 20°C/68°F. Specifically, EPA is proposing a salmon and steelhead migration use for the lower Willamette River (50 miles upstream from the confluence with the Columbia River), the John Day River (from the confluence with the North Fork River downstream to the confluence with the Columbia River), and the portion of the Snake River in Oregon (from the Washington-Oregon border to Hells Canyon Dam). The data and information supporting

these determinations is contained in the ODFW database.

v. Salmon and Steelhead Spawning Through Fry Emergence. EPA considered identifying specific locations and all the distinct time periods where the ODFW database shows salmon or steelhead spawning, egg incubation or fry emergence to occur, but doing so even for one basin resulted in over 30 different time periods for this use designation. Because such an approach would be very complicated and difficult to implement, EPA instead reviewed all of the data and developed an approach that protects this use with fewer different time frames in a basin.

After reviewing the timing information for spawning through fry emergence for all salmon species and steelhead, EPA determined that designating this use from October 15 through May 15 where it occurs would protect this use for all waters in the State except for those waters where the salmon and steelhead core juvenile rearing is the designated use. In those waters, chinook (salmon) spawning may occur prior to October 15 and steelhead fry emergence may occur later than May 15. To account for chinook spawning in these waters prior to October 15, EPA decided to designate this use as occurring either two weeks after the start of non-peak chinook spawning or at the time of peak chinook spawning, whichever date is earliest. The rationale for designating this use two weeks after the start of chinook spawning is that the use designation is for the whole river segment where chinook spawning occurs but the early spawning generally occurs in the higher elevation part of the river segment. EPA believes it is reasonable to apply the criterion two weeks after the start of spawning upstream because the criterion applies throughout the water body, including the downstream extent of the use where spawning typically occurs later.

To account for steelhead fry emergence after May 15 in waters where salmon and steelhead core juvenile rearing is the designated use, EPA decided that designating the salmon and steelhead spawning through fry emergence use where it occurs in these waters through June 15 would be protective. Although steelhead fry emerge later than June 15 in some waters, those waters are typically the upstream (*i.e.*, high elevation) portion of where this use is designated. Thus, in order to attain the criterion for this use (*i.e.*, 13°C/55°F) on June 15 in the downstream extent of waters where this use would be designated, temperatures would need to be colder on June 15 in the upstream waters and therefore would not likely reach 13°C/55°F until later in the year.

Lastly, because the timing information is well known for salmonid spawning in the lower mainstem rivers and the temperature variation within these segments is small, EPA decided to also propose a salmon and steelhead spawning through fry emergence use where and when spawning and fry emergence occur (based on the ODFW database) in waters where salmon and steelhead migration is the designated use. Of the three rivers for which EPA is proposing the migration use, the Snake River is the only one where spawning and fry emergence also occurs. As a result, it was unnecessary for EPA to develop a generalized methodology to protect the spawning use for this waterbody.

In summary, EPA proposes to designate the times and places for salmon and steelhead spawning through fry emergence use as follows:

(1) For waters where EPA is proposing to designate salmon and trout juvenile rearing and migration (*i.e.*, the 18°C/64°F summer maximum criterion applies) and where ODFW distribution information shows salmon (chinook, coho, chum) or steelhead spawning occurs, EPA is also proposing to designate the salmon and steelhead spawning through fry emergence use from October 15 through May 15.

(2) For waters where salmon and steelhead core juvenile rearing is the proposed designated use (*i.e.*, the 16°C/61°F summer maximum criterion applies), EPA also proposes to designate the salmon and steelhead spawning through fry emergence use for the following waters and associated timeframes:

(a) For waters where ODFW distribution information shows chinook spawning and steelhead spawning occurs, beginning the earliest of (i) 2 weeks after the beginning of chinook spawning, or (ii) the start of peak chinook spawning, or (iii) October 15; and ending June 15;

(b) For waters where ODFW distribution information shows chinook spawning occurs (and no steelhead spawning occurs), beginning the earliest of (i) 2 weeks after the beginning of chinook spawning, or (ii) the start of peak chinook spawning, or (iii) October 15; and ending May 15;

(c) For waters where ODFW distribution information shows steelhead spawning occurs (and no chinook spawning occurs), from October 15 to June 15; and

(d) from October 15 to May 15 for any waters where other salmon spawning (*e.g.*, coho or chum) occurs.

(3) For waters where EPA is proposing to designate a salmon and steelhead migration use (*i.e.*, 20°C/68°F criterion applies) and where ODFW distribution information indicates salmon or steelhead spawning occurs, EPA is also proposing to designate the salmon and steelhead spawning through fry emergence use from the beginning of spawning to the end of fry emergence, as indicated on the maps at *http://www.epa.gov/r10earth/federaloregonwqs.htm.*

C. Temperature Criteria for Salmonid Uses

1. Background

Each salmonid life stage has an optimal temperature range. Physiological optimum temperatures are those where physiological functions (*e.g.*, growth, swimming, heart performance) are optimized. These temperatures are generally determined in laboratory experiments. Ecological optimum temperatures are those where fish do best in the natural environment considering food availability, competition, predation, and fluctuating temperatures. All are important considerations when establishing numeric temperature criteria. Exposure to temperatures above the optimal range results in an increased severity of harmful effects, often referred to as sub-lethal or chronic effects (*e.g.*, decreased juvenile growth which results in smaller, more vulnerable fish; increased susceptibility to disease which can lead to mortality; and decreased ability to compete and avoid predation), as temperatures rise until at some point they become lethal. See Temperature Guidance, pp.18–19.

Water temperatures significantly affect the distribution, health, and survival of native salmonids in the Pacific Northwest. Since salmonids are ectothermic (cold-blooded), their survival is dependent on external water temperatures, and they will experience adverse health effects when exposed to temperatures outside their optimal range. Salmonids have evolved and thrived under the water temperature patterns that historically existed (*i.e.*, prior to significant anthropogenic impacts that altered temperature patterns) in Pacific Northwest streams and rivers. Although evidence suggests that historical water temperatures exceeded optimal conditions for salmonids at times during the summer months on some rivers, the temperature diversity in these unaltered rivers provided enough cold water during the summer to allow salmonid populations as a whole to thrive.

Pacific salmon populations have historically fluctuated dramatically due to climatic conditions, ocean conditions, and other disturbances. High water temperatures during drought conditions likely affected the historical abundance of salmon. In general, the increased exposure to stressful water temperatures and the reduction of suitable habitat caused by drought conditions reduce the abundance of salmon. Human-caused elevated water temperatures significantly increase the magnitude, duration, and extent of thermal conditions unsuitable for salmonids.

The freshwater life histories of salmonids are closely tied to water temperatures. Cooling rivers in the autumn serve as a signal for upstream migrations. Fall spawning is initiated when water temperatures decrease to suitable temperatures. Eggs generally incubate over the winter or in early spring when temperatures are coolest. Rising springtime water temperatures may serve as a cue for downstream migration. Temperature can also influence the life histories of salmonid prey and allow a competitive advantage for non-native species such as pikeminnow.

Because of the overall importance of water temperature for salmonids in the Pacific Northwest, human-caused changes to natural temperature patterns have the potential to significantly reduce the size of salmonid populations. Of particular concern are human activities that have led to the excess warming of rivers and the loss of temperature diversity.

Different salmonid species have evolved to take advantage of the Pacific Northwest's cold-water environment in different ways. Each species has a unique pattern of when and where they use the rivers, and even for a specific species this pattern of use may change from year to year. This diversity in freshwater life history is a critical evolutionary trait that has allowed salmonids to persist in a freshwater environment that naturally fluctuates and has natural disturbances.

Therefore, EPA's proposed water quality standards for temperature include protective criteria that account for the natural thermal diversity of streams and rivers. In proposing temperature criteria for salmonids uses, EPA recognizes that (1) Salmonids need specific water temperature ranges for their various life stages; (2) the natural thermal temperature regime of the rivers and streams of the Pacific Northwest were naturally thermally diverse, varying spatially and temporally; and (3) salmonids evolved specific life history strategies to find and thrive in the cold water provided by these thermally diverse river systems. EPA believes that water quality standards for temperature should take this natural thermal diversity into account in addition to setting the appropriate temperature thresholds necessary to protect the various life stages of salmonids. The water quality criteria EPA is proposing today address both of these concepts in the form of generally applicable numeric criteria corresponding to specific use designations, and two alternative criteria that, if promulgated, would apply instead of the numeric criteria on a site-specific basis. The first proposed alternative criterion addresses naturally warm conditions: when the natural thermal condition of the stream is naturally warmer than the otherwise applicable numeric temperature criterion, the natural temperature becomes the criterion. The second proposed alternative criterion concerns waters that are currently cold: if the current summer maximum stream temperature is colder than the otherwise applicable numeric criterion, the current summer maximum temperature becomes the criterion.

2. EPA's Basis for the Proposed Numeric Criteria

Water quality criteria must protect the associated designated use(s). See CWA section 303(c)(2)(A), 33 U.S.C. 1313(c)(2)(A), and 40 CFR 131.5(a)(2), 131.6(c) and 131.11(a)(1). Therefore, a criterion should apply to the whole extent of a water body or segment for which a particular use is designated, including, in the case of flowing water bodies, the lowest point downstream where the use is designated. Because streams generally warm progressively in the downstream direction, waters upstream of that point will generally need to be cooler in order to ensure that the criterion is met throughout the segment, including the furthest point downstream. Thus, a water body that meets a temperature criterion at the furthest downstream extent of the water body segment where the use is designated will, in many cases, provide water cooler than the criterion at the upstream extent of the segment. EPA took this into consideration when it formulated the proposed numeric temperature criteria contained in today's proposed rule.

EPA regulations also require that water quality standards provide for the attainment and maintenance of downstream uses. 40 CFR 131.10(b). Thus, the designated use and associated numeric criteria should apply upstream of the areas of actual use because temperatures in upstream waters significantly affect the water temperatures where the actual use occurs and upstream waters are usually colder. Of course, if a more sensitive use is designated upstream, the more protective criterion associated with that use would apply upstream. *See* 40 CFR 131.11(a).

The numeric temperature criteria EPA is proposing to protect the salmonid designated uses are the same criteria recommended in the Temperature Guidance. The Guidance included two tables summarizing the temperature considerations for each life stage of Pacific salmon and trout and bull trout that are described in detail in the technical issue papers that are the basis for the Temperature Guidance. See the record for this proposed rule to view the issue papers. These temperature considerations, summarized in Tables III–1 and III–2 at the end of this section, form the scientific basis for EPA's proposed numeric temperature criteria.

EPA requests comment on the proposed temperature criteria and methodology and scientific judgments that led to the recommendations in the Temperature Guidance and the criteria in this proposed rule. Specifically, EPA requests comment on the level of conservatism associated with proposing numeric criteria, considering the temperature ranges identified by studies that were evaluated in the Temperature Guidance. The level of conservatism should be considered along with the conservative approach of applying the criteria as the 7DADM of the second warmest year of ten years at the downstream end of the affected segment; see discussion below).

The metric EPA is proposing for all the numeric criteria is the maximum seven-day average of the daily maximum temperatures (7DADM). A 7DADM value is calculated by adding the daily maximum temperatures recorded at a site on seven consecutive days and dividing by seven. The maximum 7DADM is the highest recorded 7DADM for the year (*i.e.*, the warmest week).

The 7DADM is similar to the maximum weekly average temperature metric used previously by EPA for its national temperature criteria recommendations. However, EPA proposes to use the 7DADM metric because it describes the maximum temperatures in a stream, but is not overly influenced by the maximum temperature of a single day. Thus, it reflects an average of maximum temperatures that fish are exposed to over a week-long period. Since this

metric is oriented to daily maximum temperatures, it can be used to protect against acute effects, such as lethality and migration blockage conditions.

This metric can also be used to protect against sub-lethal or chronic effects (*e.g.*, temperature effects on growth, disease, smoltification, and competition), but the resultant cumulative thermal exposure fish experience over the course of a week or more needs to be considered when selecting a 7DADM value to protect against these effects. EPA's general conclusion from studies on fluctuating temperature regimes (which is what fish generally experience in rivers) is that fluctuating temperatures increase juvenile growth rates when mean temperatures are colder than the optimal growth temperature derived from constant temperature studies, but will reduce growth when the mean temperature exceeds the optimal growth temperature. *See* ''Issue Paper 5: Summary of Technical Literature Examining the Physiological Effects of Temperature on Salmonids,'' prepared as part of the EPA Region 10 Temperature Water Quality Criteria Guidance Development Project. EPA–910–D–01–005, May 2001, pp. 51-56. When the mean temperature is above the optimal growth temperature, the ''mid-point'' temperature between the mean and the maximum is the ''equivalent'' constant temperature. This ''equivalent'' constant temperature then can be directly compared to laboratory studies done at constant temperatures. For example, a river with a 7DADM value of 18°C/64°F and a 15°C/58°F weekly mean temperature will be roughly equivalent to a constant laboratory study temperature of 16.5°C/61.7°F (mid-point between 15°C/58°F and 18°C/65°F). Thus, both maximum and mean temperatures are important when determining a 7DADM value that is protective against sub-lethal/chronic temperature effects. See the Temperature Guidance, pp.19-20.

As discussed in the Temperature Guidance, many rivers and streams occupied by salmon and steelhead in the Pacific Northwest have a 3°C/5°F difference between the 7DADM and the weekly mean temperature. So, for many streams occupied by salmon and steelhead, a protective 7DADM temperature is approximately 1.5°C/2.7°F higher than a protective constant temperature derived from laboratory studies. *Id.* For bull trout streams, where the difference between the 7DADM and the weekly mean is smaller because there is less diurnal variation, a protective 7DADM temperature is approximately 0.5°C/0.9°F higher than a protective constant temperature derived from laboratory studies. *Id.*

3. Numeric Temperature Water Quality Criteria for EPA's Salmonid Use Designations

i. Temperature Criteria for Waters Designated for Bull Trout Juvenile Rearing and Spawning. EPA proposes a 12°C/54°F maximum 7DADM numeric criterion (which roughly translates to an equivalent constant temperature of 11.5°C/52.7°F) for waters designated for a bull trout juvenile rearing and spawning use to: (1) Protect juvenile bull trout from lethal temperatures (22–23°C/72–73°F constant); (2) provide conditions during the period of summer maximum temperature at the upper end of the optimal temperature range when food is limited for juvenile growth (8–12°C/46–54°F constant), thus providing optimal temperatures for other times of the year; (3) provide temperatures where juvenile bull trout are not at a competitive disadvantage with other salmonids (greater than 12°C/54°F constant); and (4) provide temperatures that are consistent with the temperatures observed in field studies identifying where juvenile bull trout have the highest probability to occur (12–13°C/54–55°F daily maximum). *See* Table III–2.

When determining the overall optimal range for bull trout juvenile rearing, EPA reviewed both laboratory and field data and considered both physiological and ecological aspects. Optimal growth under limited food rations in laboratory experiments, preference temperatures in laboratory experiments where fish select between a gradient of temperatures, and field studies on where rearing predominately occurs are three independent lines of evidence that form the basis for identifying the optimal temperature range for bull trout rearing in the natural environment. These three lines of evidence show very consistent results, with the optimal range between 8-12°C/46–54°F for bull trout juvenile rearing. See the Temperature Guidance.

EPA is proposing that this numeric criterion apply to the warmest times of the summer, the warmest years (except for the warmest year out of ten), and throughout the water body or segment, including the lowest downstream extent of that waterbody or segment designated for that use. Because of the conservative nature of how this criterion is applied to the water body, EPA believes that it is appropriate to propose this numeric criterion near the warmer end of the optimal temperature range for bull trout rearing. EPA expects that a numeric criterion near the warmer end of the optimal range that is applied during the period of summer maximum temperatures is likely to result in temperatures near the middle of the optimal range for most of the spring through fall in the segments where most of the rearing use occurs. EPA has identified three reasons for this. First, if the criterion is met during the summer maximum period, then temperatures will be colder than that value during the rest of the year. Second, because the criterion would apply throughout the water body or segment including the furthest point downstream where the use is designated, temperatures will generally be colder as you move upstream in the waterbody or segment. Finally, the criterion must be met in the warmest years (except for the warmest year in ten), so that in most years, the waters will be colder.

As mentioned previously, the scientific literature indicates that water with a temperature of 9°C/48°F is necessary for the protection of bull trout spawning. *See* Table III–2. For a more detailed explanation of why EPA believes the proposed 12°C/54°F summer maximum criterion would protect bull trout spawning, *see* section III.B.2.vi.

For four water bodies where EPA is proposing a 12°C/54°F 7DADM criterion to protect bull trout spawning, FWS believes that criterion may not be protective. In these waters, dams delay the natural seasonal cooling of waters in the fall to an extent that may prevent waters from cooling to 9°C/48°F downstream at times of the year when bull trout spawning occurs. The four locations identified by FWS are segments immediately downstream of: Laurence Lake Reservoir (Hood River Basin on the Middle Fork of the Hood River); Melhorne Reservoir and Clear Creek Reservoirs (Pine Creek Sub-Basin of Powder Basin); and Carmen Reservoir (behind Carmen dam in the Willamette Basin, on the McKenzie River above Blue River).

EPA requests comment on two approaches to address the four identified water body segments where this situation occurs. First, EPA requests comment on whether a numeric criterion of 9°C/48°F is necessary in these waters at the time of spawning (in addition to the 12°C/54°F 7DADM criterion) to protect the designated use of bull trout spawning. Such a criterion would apply immediately downstream of each reservoir, starting at the beginning of the spawning period. The proposed bull trout spawning and rearing use designation continues downstream of each reservoir for some distance, and some warming could occur as the water moves downstream

from the reservoir. EPA, however, believes that applying a 9°C/48°F criterion immediately below the reservoir would be protective because of the application of the criterion there at the earliest spawning dates. Typically, bull trout spawning begins at the upper end of the range of waters in which spawning occurs, and gradually moves downstream as temperatures naturally cool due to seasonal weather changes. Thus, applying a 9°C/48°F criterion immediately below the reservoir at the start of the spawning time period would mean that temperatures downstream are likely to cool naturally later in the spawning period.

Second, EPA also requests public comment on a narrative provision that would limit temperature increases during spawning times to no more than 0.3°C/0.5°F greater than the otherwise applicable criterion immediately downstream of the reservoir relative to the water temperature upstream of the reservoir. EPA believes this prohibition of any significant warming would be protective because in each case, EPA is proposing to designate bull trout spawning and rearing upstream of the reservoir, which will make the 12°C/54°F summer maximum criterion applicable there. As discussed above, seasonal temperature cycles would be expected to cool those upstream waters to the 9°C/48°F temperature that is protective of spawning in time for the fall time periods when spawning occurs. Limiting the temperature increase from these reservoirs to this insignificant increment would therefore be expected to protect the bull trout spawning below the reservoirs.

EPA believes it is important to consider the attainability of the bull trout rearing and spawning use and accompanying criterion EPA is proposing. As such, EPA will consider data and information submitted regarding the attainability of this use and criterion on the water bodies where it is proposed, including data regarding attainability of the additional criteria it is considering for the four water bodies mentioned above.

ii. Temperature Criteria for Waters Designated for Salmon and Steelhead Core Juvenile Rearing. EPA proposes a 16°C/61°F maximum 7DADM numeric criterion (which roughly translates to an equivalent constant temperature of 14.5°C/58°F) for waters designated for salmon and steelhead core juvenile rearing to: (1) Protect juvenile salmon and trout from lethal temperatures (23–26°C/73–79°F constant); (2) provide conditions during the period of summer maximum temperature at the upper end of the optimal temperature range when food is limited for juvenile growth (10–16°C/50–61°F constant), thus providing optimal temperatures for other times of the year; (3) protect against temperature-induced elevated disease rates (14-17°C/57–63°F constant); and (4) provide temperatures that juvenile salmon and trout prefer, as demonstrated by studies indicating fish in high densities at these temperatures (10–17°C/50–63°F constant or less than 18°C/64°F 7DADM). *See* Table III–1.

When determining the overall optimal temperature range for salmon and steelhead juvenile rearing, EPA reviewed both laboratory and field data and considered both physiological and ecological aspects. Optimal growth under limited food rations in laboratory experiments, preference temperatures in laboratory experiments where fish select between a gradient of temperatures, and field studies on where rearing predominately occurs are three independent lines of evidence that form the basis for identifying the optimal temperature range for salmon and steelhead juvenile rearing in the natural environment. These three lines of evidence show very consistent results, with the optimal range between 10–16°C/50–61°F for salmon and steelhead juvenile rearing. See the Temperature Guidance.

EPA is proposing that this numeric criterion apply to the warmest times of the summer, the warmest years (except for the warmest year in ten), and and throughout the water body or segment, including the lowest downstream extent of the waterbody or segment designated for that use. Because of the conservative nature of how this criterion is applied, EPA believes that it is appropriate to propose numeric criteria near the warmer end of the optimal temperature range for core juvenile salmon and trout rearing. EPA expects that a numeric criterion near the warmer end of the optimal range that is applied during the period of summer maximum temperatures is likely to result in temperatures near the middle of the optimal range for most of the spring through fall in the segments where most of the rearing use occurs. EPA has identified three reasons for this. First, if the criterion is met during the summer maximum period, then temperatures will be colder than that value during most of the rest of the year. Second, because the criterion would apply throughout the waterbody or segment, including the furthest point downstream where the use is designated, temperatures will generally be colder throughout the rest of the waterbody or segment. Finally, criterion must be met in the warmest years (except for the warmest year in ten), so that in most years, the waters will be colder.

iii. Temperature Criteria for Waters Designated for Salmon and Trout Juvenile Rearing and Migration. EPA proposes an 18°C/64°F maximum 7DADM criterion (which roughly translates to an equivalent constant temperature of 16.5°C/62°F) for waters designated for salmon and trout juvenile rearing and migration to: (1) Protect against lethal conditions for both juveniles and adults (21–22°C/70–72°F constant); (2) prevent migration blockage conditions for migrating adults (21–22°C/70–72°F average); (3) provide optimal or near optimal juvenile growth conditions (under limited food conditions) during the summer maximum conditions and optimal conditions during the rest of the year (10–16°C/50–61°F constant); and (4) prevent adults and juveniles from high disease risk and minimize the exposure time to temperatures that can lead to elevated disease rates (14–17°C/57–63°F constant). *See* Table III–1.

Data and information in the record indicates that salmon and steelhead will use waters that are warmer than their optimal thermal range during the summer and that portions of rivers and streams in the Pacific Northwest naturally (*i.e.*, absent human impacts) were historically warmer than the optimal thermal range for salmonids during the period of summer maximum temperatures. Therefore, EPA proposes a 7DADM numeric temperature criterion that is slightly warmer than the optimal thermal range for salmon and steehead to protect this use. EPA believes this criterion would provide sufficient protection from lethal conditions and sub-lethal effects that would significantly adversely affect these uses. As a result, if this value is met during the period of summer maximum temperatures, then during other times of the summer and the rest of the year, temperatures will likely be within the optimal temperature range. An additional level of protection is provided by requiring the criterion to be met during the warmest years (except for the warmest year in ten), thus ensuring that the water will be colder in most years.

iv. Temperature Criteria for Waters Designated for Salmon and Steelhead Migration. As discussed in section III.B.2.iv, the salmon and steelhead migration use applies to the lower Willamette River, a portion of the John Day River, and a portion of the Snake River. To protect salmon and steelhead migration, EPA proposes a 20°C/68°F maximum 7DADM numeric criterion in conjunction with a requirement to

ensure the presence of well-distributed cold water refugia. This 20°C/68°F criterion roughly translates to an equivalent constant temperature of about 19–20°C/66–68°F because the large mainstem rivers where this use is proposed have little diurnal variation. Well-distributed cold water refugia are portions of a river with cooler nighttime temperatures, or portions of a river that are cooler during the day, that allow salmon and steelhead to migrate through the river segment with minimal stress. Spatial cold water refugia are waters that are at least 2°C/4°F colder than the daily maximum temperature at the nearest location in the main river channel. Spatial cold water refugia results from cold tributaries and cooler groundwater flow entering into a warmer river. Temporal cold water refugia are waters in rivers at times of the day when water temperatures are at least 2°C/4°F colder than the daily maximum temperatures on that day in the main river channel (from diurnal temperature variation in a river), and are waters in rivers on days in the summer when maximum water temperatures are at least 2°C/4°F colder than the summer maximum temperature (from seasonal temperature variation).

EPA believes that a 20°C/68°F criterion accompanied by a narrative criterion to ensure the presence of well-distributed cold water refugia would protect migrating juveniles and adults from lethal temperatures and would prevent migration blockage conditions. However, information in the record indicates that many sublethal effects could occur without cooler nighttime temperatures or portions of the river that are cooler during the day, rendering the numeric criterion of 20°C/68°F alone unprotective of the designated use. *See* Temperature Guidance, pp. 28–30. In such a situation, even if the river meets a 20°C/68°F criterion for maximum temperatures, the duration of exposure to 20°C/68°F temperatures may cause adverse effects in the form of increased disease and decreased swimming performance in adults, and increased disease, impaired smoltification, reduced growth, and increased predation for late emigrating juveniles (*e.g.*, fall chinook in the Columbia and Snake Rivers). Therefore, in order to protect this use, it is appropriate to accompany the numeric criterion of 20°C/68°F with a narrative provision that would require protection of well-distributed cold water refugia.

EPA believes the amount of cold water refugia would be sufficient to protect this use if a typical migrating salmon or steelhead could access waters that are 18°C/64°F or colder for at least 12 hours a day. Salmon and steelhead that are exposed to 18°C/64°F for half the day and up to 20°C/68°F for the remainder of the day are likely to be at less risk than if these fish were continuously exposed to 20°C/68°F because studies show the severity of adverse effects from elevated water temperatures increases significantly as temperatures reach 20–21°C/68–70°F.

As a practical matter, this provision is likely to be implemented during establishment of a Total Maximum Daily Load (TMDL), because all the waters where EPA is proposing for this use currently do not attain 20°C/68°F, thus a TMDL is required based on the numeric criteria. When applying this narrative criterion in the context of a TMDL, the State or EPA would identify the existing cold water refugia and determine whether or not they were sufficient to protect the use. Existing cold water refugia would be identified in the TMDL and the existing temperatures of the cold water refugia would be the applicable numeric criteria for those water segments. Thus, the TMDL would be the document where the narrative cold water refugia criteria is translated into numeric terms. If the existing cold water refugia were insufficient to protect the use, then additional cold water refugia sufficient to protect the use would also be identified and expressed in numeric terms in the TMDL. Depending on how the TMDL is structured, the expression of cold water refugia in numeric terms might also occur during the development of watershed plans to implement the TMDL rather than in the TMDL itself. In addition, the watershed plans may contain measures to protect and restore the cold water refugia.

In the future, as these waters come into attainment of the 20°C/68°F numeric criterion, attainment of the specific numeric cold water refugia criteria identified in the TMDL or watershed plan will also need to be assessed to determine the attainment status of these waters.

In the NPDES permitting context, existing cold water refugia are required to be protected. Where additional cold water refugia have not yet been identified, EPA believes it is impracticable to do so in the context of an individual NPDES permit because this assessment requires an evaluation of the adequacy of the existing cold water refugia on the water body as a whole and is likely to be data intensive. EPA believes this kind of comprehensive assessment is only practicable in the context of TMDL development. Once the TMDL is completed, however, any wasteload allocations to protect either existing or new cold water refugia must be incorporated into NPDES permits during the next permit cycle.

EPA seeks comment on whether a 18°C/64°F 7DADM criterion (without well-distributed cold water refugia) would be a more appropriate criterion for protection of the salmon and steelhead migration use, since the record shows that it would be equally protective of the use and may be more straight forward to implement than the 20°C/68°F with a narrative criterion for well-distributed refugia. See EPA Temperature Guidance, pp15–25. EPA, however, believes 18°C/64°F *throughout* the waters would be extremely costly to attain as compared to the 20°C/68°F with a narrative criterion for well-distributed refugia.

v. Temperature Criteria for Waters Designated for Salmon and Steelhead Spawning Through Fry Emergence. EPA proposes a 13°C/55°F maximum 7DADM criterion (which roughly translates to an equivalent constant temperature of 11.5°C/53°F) for this use (during the time of year when it applies) to: (1) Protect gametes inside adults prior to spawning (less than 13°C/55°F constant), (2) provide temperatures at which spawning is most frequently observed in the field (4–14°C/39–57°F daily average), and (3) provide protective temperatures for egg incubation (4–12°C/39–54°F constant for good survival and 6–10°C/43–50°F constant for optimal range) that occurs over the winter (salmon) and spring (trout), assuming the typical annual thermal pattern. As discussed in section III.B.1, EPA believes that in many water bodies, attainment of the summer maximum criteria for all the other proposed designated uses will result in attainment of the 13°C/55°F maximum 7DADM criterion for protection of salmon and steelhead spawning through fry emergence.

4. Alternative Criteria

i. EPA's Basis for the Proposed Natural Conditions Criterion. EPA is proposing an alternative criterion for natural conditions that would apply instead of the numeric criterion, where applicable. The criterion would require that where a water body or segment's water temperature under natural conditions exceeds the numeric criterion identified above, then the natural condition would be the applicable water quality criterion. Natural temperatures are those that would exist in the absence of human activities that alter stream temperatures. EPA views numeric criteria that reflect natural conditions to be protective of

salmonid designated uses because river temperatures prior to human impacts clearly supported healthy salmonid populations. EPA intends that the estimate of the temperature reflecting natural conditions be determined by the State or EPA using a scientifically-defensible method that utilizes the best available data, as indicated in the proposed rule at 40 CFR 131.39(d)(1). Typically, this determination is made in the context of a TMDL. EPA recognizes, however, that there will always be uncertainties in estimating natural conditions. Potential sources of uncertainty are numerous, including, but not limited to, data gaps, measurement errors, model errors, omissions in identification of impacts, and aggregation errors. It is important that regulatory agencies document the sources of uncertainty in any assessment for the benefit of decision-makers, stakeholders, and the public.

Where the natural temperature conditions so estimated exceeds 20°C/68°F, EPA proposes that the river must have well-distributed cold water refugia. EPA views cold water refugia to be an important aspect of the natural condition that must be specifically identified in waters where the estimated natural condition exceeds 20°C/68°F because of the significant adverse effects to salmon and steelhead exposed to temperatures exceeding 20°C/68°F. See Table 1. Well-distributed cold water refugia allows salmon and steelhead to minimize their exposure to temperatures that exceed 20°C/68°F. As discussed in section III.C.3.iv., EPA believes the amount of cold water refugia would be sufficient if salmon or steelhead could access waters that are at least 2°C/4°F colder than the estimated natural maximum temperature for the main channel for at least 12 hours a day. Refer to section III.C.3.iv. for a discussion on how cold water refugia should be addressed in the context of TMDLs, NPDES permits, and waterbody assessments.

Overview of Methods to Estimate Natural Background Temperatures: There are a number of different ways of estimating natural temperature conditions for the purposes of applying this proposed narrative criterion. These include: (1) Demonstrating that current temperatures reflect natural conditions, (2) using a non-degraded reference stream for comparison, (3) using historical temperature data, (4) using statistical or computer simulation models, and (5) assessing the historical distribution of salmonids. There may be other ways as well. Each approach has its strengths and weaknesses and therefore may or may not be most appropriate for a given situation. Moreover, all of these approaches have uncertainty, which should be quantitatively described where possible. EPA encourages the use of a combination of approaches to estimate natural background temperatures, where feasible. Below is an overview of the five approaches listed above.

Demonstrating That Current Temperatures Reflect Natural Conditions: Under this approach, the past and present human activities that could impact the river temperatures are documented and a technical demonstration is made that the human activities do not currently impact temperatures. This approach is most applicable to non-degraded watersheds (*e.g.*, State and National parks, wilderness areas, and protected State and National lands). These watersheds can be used as ''reference'' streams for estimating the natural background temperatures of degraded streams (see below). If there is a small human impact on temperatures, it may also be possible to estimate the human impact and subtract it from current temperatures to calculate the natural temperatures.

Comparisons to a Reference Stream: It is often reasonable to assume that the natural temperatures of a thermally degraded stream are similar to those of a non-degraded stream, so long as the location, landscape context, and physical structure of the stream are sufficiently similar. The challenge to this approach is finding a reference stream that is of similar location, landscape context, and physical structure. Because large rivers are unique and most in the Pacific Northwest have been significantly impacted by human activities, this approach is most applicable to smaller streams where a reference stream with current temperatures at natural conditions exists.

Historical Temperature Data: For some rivers, historical temperature data are available that reflect temperatures prior to human influences on the river's temperature regime, and can be used as an estimate of natural temperatures. Factors that lend uncertainty to historic temperature data are the uncertain nature of the quality of the data and whether or not humans affected temperature prior to data collection. Further, historical temperature data often do not adequately capture the spatial and/or temporal variability in stream temperature due to limited spatial or temporal sampling. Historical data may be useful, however, for verifying estimates of modeled natural temperatures.

Temperature Models: Two major methods have been commonly used for water quality modeling in the United States over the last 20 years: (1) Statistical models, which are based on observed relationships between variables and are often used in conjunction with measurements from a reference location, and (2) process-based models, which attempt to quantify the natural processes acting on the water body. Process-based models are often employed when no suitable reference locations can be identified.

Statistical models, also referred to as empirical models, estimate the thermal conditions of streams by using statistics to find correlations between stream temperature and those landscape characteristics that control temperature (*e.g.*, elevation, latitude, aspect, riparian cover, *etc.*). The equations in statistical models describe the observed relationships in the variables as they were measured in a specific location. If the specific location is a non-degraded reference stream, then the model can be used to estimate natural conditions in degraded streams. Statistical models have the advantage of being relatively simple, as they rely on general data and statistics to develop correlations.

The comparability between the reference water body where the statistical correlations are generated and the assessment water body strongly affects the applicability of statistical models. Uncertainties in statistical model results increase with increasing dissimilarity between the landscape characteristics of the reference and assessment water bodies. Uncertainties also increase when models do not include landscape characteristics that control important processes affecting the water temperature. For these reasons, statistical models are best suited for small headwater streams or for generalized predictions across a large landscape. Process models, also referred to as simulation models, are based on mathematical characterizations of the critical processes that affect water temperature in rivers. The equations are constructed to represent the observed or expected relationships and are generally based on physical or chemical principles that govern the fate and transport of heat in a river (*e.g.*, net heat flux from long-wave radiation, direct short wave radiation, convection, conduction, evaporation, streamside shading, streambed friction, and water's back radiation) (Bartholow, 2000).

Estimating water temperature with a process model is generally a two-step process. As a first step, the current river temperatures are estimated with system characteristics (*e.g.*, amount of shade

provided by the canopy, river geometry, point source inputs, *etc.*) reflecting current conditions. Model performance can then be evaluated by comparing simulated temperatures to measured temperatures. Once the model is thus calibrated, the second step involves changing the system characteristics to represent natural conditions. Examples of these changes are removal of point source discharges from the model inputs, changing the model hydrodynamics from impounded conditions due to a dam to free-flowing conditions, and increasing the riparian shade to represent a natural forest.

Unlike statistical models, process models do not rely upon data from reference locations, so they can be used for rivers that have no suitable natural reference comparisons available. Thus, process models are well suited for estimating natural conditions for larger streams and rivers. Although powerful, process models are by no means infallible. As noted above, there are numerous potential sources of uncertainty in model estimates, and these should be well documented in decision-making.

In addition to estimating natural conditions, process-based models are useful for understanding the basic mechanisms influencing water temperature in a watershed, understanding the relative contributions from different sources at different locations, understanding cumulative downstream impacts from various thermal loads, performing ''what if'' scenarios for different mitigation options, and setting TMDL allocations.

Historical Fish Distributions: Maps of historic salmonid distributions and their time of use can provide rough estimates of natural temperatures. Areas where salmonids existed historically likely provided temperatures suitable for salmonids and, as described in the Temperature Guidance, EPA has a fairly good understanding of suitable temperatures for various life stages of salmonids.

ii. EPA's Basis for Proposing a Criterion to Protect Waters That Are Currently Cold. One of the important principles in protecting the designated uses proposed in this rule is the protection of existing high quality habitat. EPA, therefore, believes it is important to have strong regulatory measures to protect waters with ESA-listed salmonids that are currently colder than EPA's proposed numeric criteria. EPA is proposing a narrative criterion specific to waters in which salmonid species that are listed as threatened or endangered under the ESA are present, and where available data and information from ten years prior to the date of the publication of the final rule in the **Federal Register** reflect the temperature in the water body and demonstrate that the warmest summer maximum 7DADM temperature is colder than the applicable numeric criterion. In these cases, the summer maximum 7DADM temperature shall be the applicable water quality criterion, unless a complete data record of ten years is available, in which case the maximum 7DADM temperature for the year with the second highest maximum 7DADM shall be the applicable criterion.

Because the temperatures of many waters in the Pacific Northwest are currently higher than the summer maximum criteria proposed in this rule, the high quality, thermally-optimal waters that do exist are important for the survival of ESA-listed salmonids. Additional warming of these waters will likely cause harm by further limiting the availability of thermally optimal waters. Further, protection of these cold water segments in the upper part of a river basin plays an important role in maintaining temperatures downstream. Thus, in situations where downstream temperatures currently exceed numeric criteria, upstream temperature increases in waters currently colder than the criteria may further contribute to the non-attainment downstream, especially where there are insufficient intervening river miles to allow the river to return to equilibrium temperatures. *See* ''Issue Paper 3: Spatial and Temporal Patterns of Stream Temperature,'' Prepared as Part of EPA Region 10 Temperature Water Quality Criteria Guidance Development Project. EPA–910–D–01–003, May 2001.; ''Technical Synthesis: Scientific Issue Relating to Temperature Criteria for Salmon, Trout, and Char Native to the Pacific Northwest,'' A Summary Report Submitted to the Policy Workgroup of the EPA Region 10 Water Temperature Criteria Guidance Project. EPA–910–D–01–007. Finally, natural summertime temperatures in Pacific Northwest waters were spatially diverse, with areas of cold-optimal, warm-optimal, and warmer-than-optimal water. The natural conditions narrative criterion described previously deals with natural conditions reflecting warmer-than-optimal water temperature. EPA believes it is important, however, to balance the effects of these warmer waters by adopting provisions to protect waters that are at the colder end of their optimal thermal range. EPA's proposed rule is intended to do this.

Provisions to protect waters currently colder than numeric criteria can also be important to ensure the numeric criteria proposed today protect salmonid uses. As discussed previously, EPA's proposed criteria are based in part on the judgment that meeting the criteria at the lowest downstream point at which the use is designated will likely result in cooler waters upstream. These proposed cold water protection provisions provide more certainty that this will be true.

EPA requests comment on an alternative that would rely on the State's existing antidegradation policy and EPA's proposed implementation procedures to protect these high-quality waters. In general, antidegradation policies, which are part of water quality standards, prohibit a lowering of water quality in high-quality waters except when specific procedural and substantive requirements are satisfied. Using the antidegradation policy to protect high-quality waters may provide greater site-specific flexibility because it would not be necessary to promulgate a rule change to accomodate a situation where some temperature increase (but still below the applicable criterion) was unavoidable. Also, there may be practical difficulties in determining what the applicable criterion is for high-quality waters under the proposed approach if data is incomplete or implementation resources are limited.

TABLE III–1.—SUMMARY OF TEMPERATURE CONSIDERATIONS FOR SALMON AND TROUT LIFE STAGES

Life stage	Temperature consideration	Temperature and unit	Reference
Spawning and Egg Incubation.	* Temp. Range at which Spawning is Most Frequently observed in the Field.	4–14 °C (daily avg)	Issue Paper 1; pp 17–18. Issue Paper 5; p 81.
	* Egg Incubation Studies.		
	—Results in Good Survival	4–12 °C (constant)	Issue Paper 5; p 16.
	—Optimal Range	6–10 °C (constant).	

TABLE III–1.—SUMMARY OF TEMPERATURE CONSIDERATIONS FOR SALMON AND TROUT LIFE STAGES—Continued

Life stage	Temperature consideration	Temperature and unit	Reference
	* Reduced Viability of Gametes in Holding Adults.	> 13 °C (constant)	Issue Paper 5; pp 16 and 75.
Juvenile Rearing	* Lethal Temp. (1 Week Exposure)	23–26 °C (constant)	Issue Paper 5; pp 12, 14 (Table 4), 17, and 83–84.
	* Optimal Growth.		
	—unlimited food	13–20 °C (constant)	Issue Paper 5; pp 3–6 (Table 1), and 38–56.
	—limited food	10–16 °C (constant).	
	* Rearing Preference Temp. in Lab and Field Studies.	10–17 °C (constant)	Issue Paper 1; p 4 (Table 2).
		<18 °C (7DADM)	Welsh et al. 2001.
	* Impairment to Smoltification	12–15 °C (constant)	Issue Paper 5; pp 7 and 57–65.
			Issue Paper 5; pp 7 and 57–65.
	* Impairment to Steelhead Smoltification	>12 °C (constant).	
	* Disease Risk (lab studies)		Issue Paper 4, pp 12–23.
	—High	>18–20 °C (constant).	
	—Elevated	14–17 °C (constant).	
	—Minimized	12–13 °C (constant).	
Adult Migration	* Lethal Temp. (1 Week Exposure)	21–22 °C (constant)	Issue Paper 5; pp 17, 83–87.
	* Migration Blockage and Migration Delay	21–22 °C (average)	Issue Paper 5; pp 9, 10, 72–74.
			Issue Paper 1; pp 15–16.
	* Disease Risk (lab studies).		
	—High	>18–20 °C (constant)	Issue Paper 4; pp 12–23.
	—Elevated	14–17 °C (constant).	
	—Minimized	12–13 °C (constant).	
	* Adult Swimming Performance.		
	—Reduced	>20 °C (constant)	Issue Paper 5; pp 8, 9, 13, 65–71.
	—Optimal	15–19 °C (constant).	
	* Overall Reduction in Migration Fitness due to Cumulative Stresses.	>17–18 °C (prolonged exposures).	Issue Paper 5; p 74.

TABLE III–2.—SUMMARY OF TEMPERATURE CONSIDERATIONS FOR BULL TROUT LIFE STAGES

Life stage	Temperature consideration	Temperature and unit	Reference
Spawning and Egg Incubation.	* Spawning Initiation	<9 °C (constant)	Issue Paper 5; pp 88–91.
	* Temp. at which Peak Spawning Occurs	<7 °C (constant)	Issue Paper 5; pp 88–91.
	* Optimal Temp. for Egg Incubation	2–6 °C (constant)	Issue Paper 5; pp 18, 88–91.
	* Substantially Reduced Egg Survival and Size.	6–8 °C (constant)	Issue Paper 5; pp 18, 88–91.
Juvenile Rearing	* Lethal Temp. (1 week exposure)	22–23 °C (constant)	Issue Paper 5; p 18.
	* Optimal Growth.		
	—unlimited food	12–16 °C (constant)	Issue Paper 5; p 90. Selong et al 2001. Bull trout peer review, 2002.
	—limited food	8–12 °C (constant).	
	* Highest Probability to occur in the field	12–13 °C (daily maximum)	Issue Paper 5; p 90. Issue Paper 1; p 4 (Table 2). Dunham et al., 2001. Bull trout peer review, 2002.
	* Competition Disadvantage	>12 °C (constant)	Issue Paper 1; pp 21–23. Bull trout peer review, 2002.

D. IGDO Criterion for Salmonid Spawning

1. Background

The early life stages of fish are recognized as being the most sensitive and requiring relatively high DO concentrations. The oxygen demand by embryos depends on temperature and on the stage of development with the greatest DO required just prior to hatching. When water temperature is near 15°C/58°F, maximum critical levels of DO (where ambient levels meet metabolic needs) for steelhead embryos were estimated at 10.2 mg/L (Rombough, 1986). Rombough (1986) and other researchers have shown that critical oxygen concentration increases with temperature and with the stage of development of the fish. In experiments to determine critical DO levels in steelhead embryos, Rombough (1988) found that critical DO levels rose from less than 1.0 mg/L shortly after fertilization to 9.7 mg/L prior to hatching (implies an IGDO of at least 6.7 mg/L), depending on the temperature. The crucial timing of IGDO, stream temperature, and flow rate varies with each salmonid Evolutionarily Significant Unit's specific characteristics. Sowden and Power (1985) observed that survival in field studies is negligible when IGDO falls below 5 mg/L. This is consistent with other studies. Phillips and Campbell (1962) and Maret *et al.* (1993) observed no or negligible survival in field studies where IGDO fell below 8.0 mg/L.

Turnpenny and Williams (1980) also found survival significantly reduced at 8 mg/L. Other studies found reduced growth of juvenile salmon correlating with IGDO with significant reductions occuring at levels below 9 mg/L (Maret *et al.*, 1993). Growth reductions result in small-sized juveniles that can be poor competitors and face increased risks from predation, disease, and starvation (Mason, 1969; Chapman and McLeod, 1987).

2. EPA's Proposed IGDO Criterion

EPA is proposing a water quality criterion for IGDO for the protection of bull trout spawning and salmon and steelhead spawning through fry emergence such that in water bodies or segments in which the numeric temperature criteria for bull trout spawning and salmon and steelhead spawning through fry emergence applies according to the proposed use designation maps, the spatial median IGDO shall not be less than 8.0 mg/L.

Altitude and temperature place physical limitations on the oxygen concentration in water. Oxygen saturation level decreases with increasing altitude and naturally, increasing temperature. (Oregon Department of Environmental Quality, Dissolved Oxygen 1992–1994 Water Quality Standards Review Final Issue Paper, June 1995). Thus, the IGDO criterion for the protection of egg incubation and fry emergence may not be achievable in some locations and times. EPA recognizes the need to have an alternative criterion when high altitude or naturally occurring warm temperatures preclude meeting the 8 mg/L IGDO criterion. Therefore, EPA proposes the following modifying provision to the IGDO criterion. Where barometric pressure, altitude, and air temperature preclude attainment of the IGDO criterion, then the criterion shall be not less than 95 percent of the maximum IGDO level attainable given the barometric pressure, altitude, and air temperature.

EPA requests comment on its proposed IGDO criterion, which is based on the studies cited above, and any additional data relevant to this criterion. EPA also notes that in general, an ambient water column DO level of 11 mg/L will ensure an IGDO of 8 mg/L and requests comment on whether an IGDO criterion is necessary to protect salmonid spawning in waters that already have an 11 mg/L ambient DO criterion.

E. Antidegradation Implementation Methods

1. Background

Section 303 (33 U.S.C. 1313) of the CWA requires States and authorized Tribes to adopt water quality standards for waters of the United States within their applicable jurisdictions. Such water quality standards must include, at a minimum: (1) Designated uses for all water bodies within their jurisdictions, (2) water quality criteria necessary to protect the most sensitive of the uses, and (3) antidegradation provisions consistent with the regulations at 40 CFR 131.12. Antidegradation is an important tool for States and authorized Tribes to use in meeting the CWA's requirement that water quality standards protect the public health or welfare, enhance the quality of water and meet the objective of the CWA to restore and maintain the chemical, physical and biological integrity of the nation's waters.

EPA's regulation at 40 CFR 131.12 requires that States and authorized Tribes adopt antidegradation policies to provide three levels of water quality protection and identify implementation methods. The first level of protection at 40 CFR 131.12(a)(1) requires the maintenance and protection of existing instream water uses and the level of water quality necessary to protect those existing uses (tier 1). Protection of existing uses is the ''floor'' of water quality protection afforded to all waters of the United States. Existing uses are ''* * * those uses actually attained in the water body on or after November 28, 1975, whether or not they are included in the water quality standards.'' (40 CFR 131.3(e))

The second level of protection is for high quality waters (tier 2). High quality waters are defined in 40 CFR 131.12(a)(2) as waters where the quality is better than the levels necessary to support propagation of fish, shellfish, and wildlife and recreation in and on the water. This high water quality is to be maintained and protected unless the State or authorized Tribe finds, after public participation and intergovernmental review, that allowing lower water quality is necessary to accommodate important economic or social development in the area in which the waters are located. In allowing lower water quality, the State or authorized Tribe must assure water quality adequate to protect existing uses. Further, prior to allowing lower water quality, the State or authorized Tribe must ensure that all applicable statutory and regulatory requirements are achieved for all other new and existing point sources and all cost-effective and reasonable best management practices required by the State or authorized Tribe are achieved for nonpoint source control.

Finally, the third and highest level of antidegradation protection is for Outstanding National Resource Waters (ONRWs) (tier 3). If a State or authorized Tribe determines that the characteristics of a water body constitute an outstanding National resource, such as waters of National and State parks and wildlife refuges and waters of exceptional recreational or ecological significance, and designates a water body as such, then those characteristics must be maintained and protected. *See* 40 CFR 131.12(a)(3).

In addition to requiring States and authorized Tribes to have an antidegradation policy, 40 CFR 131.12 requires States to identify methods for implementing such a policy. Such methods are not required to be contained in the State's regulation, but as they inform EPA's judgment regarding whether the State's antidegradation policy is consistent with the Federal regulations at 40 CFR 131.12, they are subject to EPA review. Where the State chooses to make such methods part of its water quality standards regulations, section 303(c)(3) of the CWA and EPA's implementing regulations require them to be submitted to EPA for review. When a State or authorized Tribe chooses to develop such methods as guidance or outside of regulation, EPA reviews the methods either in connection with the State or Tribe's submission of an amendment to its antidegradation regulations under CWA section 303(c)(3) or under its discretionary authority to review existing water quality standards under CWA section 303(c)(4).

EPA's regulations at 40 CFR 131.12 provide a great deal of discretion to States regarding the amount of specificity required in antidegradation implementation methods. The regulations do not specify minimum elements for such methods, but do require that such methods not undermine the intent of the antidegradation policy. *See* Advanced Notice of Proposed Rulemaking, 63 FR 36742, 36781 July 7, 1998.

Finally, EPA wishes to explain the applicability of antidegradation provisions to point sources and nonpoint sources. While antidegradation requirements as water quality standards apply to the waterbody, the CWA requires only that antidegradation be applied to point sources because the CWA only gives EPA authority to regulate point sources.

Appalachian Power Company v. *Train*, 545 F.2d 1351, 1373 (4th Cir. 1976). Thus, whether antidegradation applies to nonpoint sources is solely a question of State and Tribal law. The CWA and EPA's regulations leave to the States and authorized Tribes the decision whether to regulate such sources by requiring that they undergo antidegradation review. *American Wildlands* v. *Browner*, 260 F.3d 1192, 1198 (10th Cir. 2001). EPA's proposed antidegradation methods must also meet the requirements of the ESA.

2. Why Is EPA Proposing Antidegradation Implementation Methods for the State of Oregon?

EPA is proposing methods for implementing the antidegradation policy adopted by the State of Oregon in order to comply with the court's final judgment in *Northwest Environmental Advocates* v. *EPA & NMFS* (August 13, 2003). At the time of the Oregon water quality standards litigation, EPA had approved Oregon's antidegradation policy. In addition, at the time of the initial briefing in the Oregon litigation, Oregon was in the process of developing methods for implementing its antidegradation policy. See ''State of Oregon: Antidegradation Policy Implementation Internal Management Directive for NPDES Permits and Section 401 Water Quality Certifications,'' March 2001 (''the Directive''). These methods were not contained in Oregon's water quality standards regulations and were not submitted to EPA for review and approval as a ''new or revised standard'' under CWA section 303(c)(3). In addition, EPA did not review the Directive as part of any discretionary action to review Oregon's existing antidegradation regulations under CWA section 303(c)(4). Because of the jurisdictional argument EPA made in the Oregon litigation and because the implementation methods had not been submitted to EPA for review, EPA did not inform the court of the existence of Oregon's implementation methods. EPA argued that EPA was not subject to a mandatory duty under CWA section 303(c)(3) because there was no new or revised water quality standard regarding antidegradation that triggered a mandatory duty for EPA review, and that there could be no Administrative Procedure Act claim unless and until a party petitioned the Agency to act under its discretionary authority, because absent such a petition, there is no agency ''action'' to review. Although the court agreed with EPA in holding that EPA did not have a mandatory duty to review Oregon's implementation methods, the court found that it could immediately review EPA's failure to exercise its discretionary authority to review Oregon's methods for implementing its antidegradation policy. 268 F.Supp.2d 1255, 1264 (D.Or. 2003). The court held that EPA acted arbitrarily in failing to exercise its discretion to promulgate an implementation plan for Oregon. The court, therefore, ordered EPA to promulgate an antidegradation implementation plan for Oregon. While EPA does not agree with the court's decision, EPA is complying with the court's order. 268 F.Supp.2d at 1265.

3. What Antidegradation Implementation Methods Is EPA Proposing for the State of Oregon?

Subsequent to the court's order, Oregon proposed to amend its water quality standards, including its antidegradation regulations, to include key elements of its antidegradation implementation methods within its regulations. Oregon Administrative Rule (OAR) 340–041–0004; August 15, 2003. EPA's proposed rule is based on Oregon's proposal. When Oregon finally adopts revisions to its water quality standards, Oregon is required to submit them to EPA for review. As part of its review of Oregon's new or revised water quality standards as contained in State regulation, EPA will also consider Oregon's implementation methods that are not in State regulation, as information that is relevant to understanding what the regulatory revisions mean in practice. The final judgment dated August 13, 2003, requires EPA by March 2, 2004, to either promulgate final regulations regarding methods for implementing Oregon's existing antidegradation policy or to approve Oregon's submission. Thus, EPA may approve Oregon's antidegradation methods even if they are not the same as this proposal, as long as they are consistent with the CWA. EPA will consider what is contained in the Directive as part of determining whether Oregon's implementation methods comport with the CWA.

Tier 1: EPA is proposing that, to implement Tier 1, any lowering of water quality in any water body must protect existing uses. Oregon's existing regulation currently contains provisions to protect existing uses. *See e.g.*, 340–041–0004(1) Purpose; 340–041–0004(8)(c) High quality waters; and 340–041–0004(10), which refers in turn to 3401–041–0004(12)(a)(C). Due to the court's order, EPA is proposing, consistent with Oregon's Regulations and Directive (page 12 flow chart) that in all waters, including those that are not high quality, the existing use must be protected. For example, even in a water body that is impaired, if it continues to support a limited aquatic life use or the water quality supported an aquatic life use since November 28, 1975, prior to any authorization that requires compliance with water quality standards, the level of water quality necessary to protect that ''existing use'' must be maintained and protected. 40 CFR 131.3(e); 131.12(a)(1).

Tier 2: The purpose of EPA's antidegradation regulations with regard to high quality waters, 40 CFR 131.12(a)(2), is to ensure that assimilative capacity in the waterbody is not used up without a public process to determine that lowering water quality is necessary to accommodate important social or economic development. EPA's regulation applicable to high quality waters contains terms that provide States, and Territories and authorized Tribes with significant discretion to determine what is a high quality water, what constitutes a ''lowering'' of water quality that would trigger a Tier 2 antidegradation review, and what constitutes a determination that the ''lowering'' is necessary to accommodate important social or economic development. Thus, in identifying methods for implementing antidegradation policies, EPA would like States and authorized Tribes to explain how they intend to implement these three aspects of the regulation.

Oregon's definition of high quality waters in its existing antidegradation policy tracks EPA's regulation precisely at 40 CFR 131.12(a)(2). Regarding an implementation method for this regulation, EPA proposes to follow Oregon's approach in defining a high quality water as one that has water quality that meets or is better than all water quality standards. In other words, a high quality water is one that is not a water quality-limited water. Directive at 21.

EPA recognizes that Oregon's approach reflects a waterbody-by-waterbody approach to antidegradation rather than a parameter-by-parameter approach. In EPA's ANPRM, July 7, 1998, EPA discussed the advantages and disadvantages to both approaches to designating high quality waters. 63 FR 36782, 36783. EPA also discussed these issues in the preamble to its proposed rule regarding antidegradation implementation procedures for Kentucky. 67 FR 68971, 67798–99 November 14, 2002. EPA interprets the regulation to authorize either approach. Although arguably a parameter-by-parameter approach may capture more

waters as Tier 2 waters, EPA notes that Oregon includes waters that ''meet'' all water quality standards as Tier 2 waters, rather than using the term ''exceed'' in the regulation to exclude from Tier 2 review those waters that precisely meet water quality standards. Under Oregon's approach, which EPA follows here, all waters are captured within the State's water quality management system. Impaired waters are addressed through the TMDL provisions of CWA section 303(d) and those that are not impaired are not lowered absent a public process to determine that such lowering is necessary to accommodate important social or economic development. Further, Oregon's approach has the advantage of relying on pre-existing assessment decisions rather than requiring additional assessment of the waterbody to determine if it is a Tier 2 water.

Regarding what constitutes a ''lowering'' that triggers Tier 2 review, in today's proposed rule, EPA proposes a rule tracking Oregon's proposed amendment to its antidegradation regulations that allows for certain *de minimis* loadings not to constitute a ''lowering'' of water quality that triggers Tier 2 antidegradation review. EPA has long interpreted the antidegradation policy to allow a determination that certain discharges have an insignificant impact on water quality and therefore may not require an antidegradation review. See EPA's proposed rule regarding Kentucky's antidegradation implementation methods, 67 FR 68791, November 14, 2002. See also ''Proposed Water Quality Guidance for the Great Lakes System,'' (GLI) 58 FR 20802, April 16, 1993; and ''Supplementary Information Document for the Final Great Lakes Guidance,'' Chapter VII at 203–225, 207–210 included in the record for this rule.

Specifically, EPA proposes that pollutant concentration increases are not considered lowering of water quality if there is no overall increase in the total mass load of the pollutant on at least an annual basis. Also, a *de minimis* change in temperature that does not reduce or degrade water quality of the State is not required to undergo Tier 2 review. EPA tracks Oregon's definition of *de minimis* to mean a seven-day average maximum stream temperature increase or decrease of 0.30°C/0.54°F or less across the watershed.

Third, regarding what constitutes a finding that a lowering is necessary to accommodate important social or economic development, EPA tracks the main components of Oregon's proposed antidegradation regulations and the main principles contained in Oregon's Directive, that the discharger/applicant provide the State with enough information to allow for a financial impact analysis that assesses whether allowing important economic and social development justifies lowering water quality. EPA is aware that Oregon has included in its proposed amendments much more detail of how this assessment would be done through a reference to certain parts of its Directive; however, EPA is not proposing that those specifics be contained in EPA's proposed rule. EPA believes that including this degree of specificity in a Federal rulemaking is not required by the regulations at 40 CFR 131.12(a)(2) nor is it in the public interest because once codified, a subsequent Federal rulemaking would be necessary to allow the State to deviate from the Federal rule, and EPA does not wish to constrain a State's discretion to this degree. EPA intends to consider the specifics of the Directive, incorporated into the State regulation, when EPA acts on the State's final revised water quality standards regulations submitted to EPA.

Tier 3: EPA proposes to track Oregon's proposed water quality standards regulation regarding Tier 3 implementation for Outstanding Resource Waters (ORWs). (In today's proposed rule, EPA uses the term Outstanding Resource Water or ORW to be consistent with the State of Oregon's terminology in its existing regulation.) EPA's proposed rule describes the process the State would follow in designating high quality waterbodies to be classified as ORWs in order to protect the water quality parameters that affect ecological integrity of critical habitat or special water quality values that are vital to the unique character of those waterbodies.

F. Effect of This Proposed Rule on the State's Water Quality Programs

EPA's approach in this rulemaking does not undermine the State's primary role in designating uses, establishing protective criteria, and ensuring the protection of high quality waters in Oregon. EPA prefers that States establish their own regulations. If the standards are adopted by the State for specific waters and approved by EPA before final promulgation of the Federal standards, EPA will not proceed with the final promulgation and the State standards will take effect for CWA purposes.

Water quality standards are implemented through such mechanisms as NPDES permits. The State has flexibility in how it implements these water quality standards. EPA has included a variance provision in today's proposed rule, 40 CFR 131.39(h), authorizing the Regional Administrator to grant variances based upon a permittee's demonstration, consistent with the Federal regulations, that the use is not attainable. Variances are particularly suitable for instances where the cause of nonattainment is discharger-specific and it appears that the designated use in question will eventually be attainable or be demonstrated to be unattainable. For example, a permitted entity may have a long-term plan (*e.g.*, 20 or 30 years) in place that will result in the eventual attainment of water quality standards; however, in the intervening years attaining water quality standards may not be possible. In this circumstance, the entity may wish to seek a water quality standards variance. See Section V.C. In addition, the State will use these water quality standards, if finalized, in identifying impaired waters and establishing TMDLs. Where the State identifies waters subject to this rulemaking as impaired, the State has discretion in scheduling the water for TMDL development. Further discussion is contained in section V.F.

IV. Economic Analysis

These standards may serve as a basis for development of NPDES permit limits. In Oregon, the State is the NPDES permitting authority and retains considerable discretion in implementing standards. EPA prepared a preliminary analysis to evaluate potential costs to NPDES dischargers in Oregon associated with future State implementation of EPA's Federal standards.

Any NPDES-permitted facility that discharges to water bodies affected by this proposed rule could potentially incur costs to comply with the rule's provisions. The types of affected facilities may include industrial facilities and publicly owned treatment works (POTWs). EPA did not consider the potential costs for nonpoint sources, such as agricultural and forestry-related nonpoint sources because the CWA does not regulate nonpoint sources. EPA does, however, recognize that the State may decide to require controls under State law for nonpoint sources to achieve water quality standards. As a technical matter, nonpoint source discharges are difficult to model and evaluate for potential costs because they are intermittent, highly variable, and occur under different hydrologic or climatic conditions than continuous discharges from industrial and municipal facilities, which are evaluated under critical low flow or drought conditions. Thus, the evaluation of nonpoint sources and their

effects on the environment is highly site-specific and data sensitive. In addition, EPA did not quantify the potential benefits of this proposed rule for Oregon.

A. Identifying Affected Facilities

According to EPA's Permit Compliance System (PCS), there are 1,447 NPDES-permitted facilities in Oregon. Seventy-six of the facilities are classified as major dischargers, and 1,371 are minor or general permit dischargers. However, EPA did not include general permit facilities in its analysis because data for such facilities are extremely limited, flows are usually negligible, and EPA could not determine if any of these facilities discharge to affected stream segments because location information is not available in EPA's PCS database. Therefore, EPA's analysis includes a universe of 382 permitted facilities (76 major and 306 minor).

To identify facilities potentially affected by the proposed rule, EPA assumed that only facilities that discharge to rivers and streams with new or more stringent uses and criteria may be affected by the water quality criteria and designated uses provisions. (EPA also assumed that facilities discharging directly to the Columbia River and the Pacific Ocean are not affected by the proposed rule, except for portions of the Columbia River where spawning occurs and the proposed IGDO criterion would apply.) For IGDO, the current criterion of 6 mg/L is less stringent than the revised IGDO criterion of 8 mg/L. Therefore, all waters designated for salmonid spawning are potentially affected by the proposed rule, and facilities discharging to these waters are included in the set of potentially affected dischargers. EPA identified these facilities by overlaying PCS facilities with the waters designated for salmonid spawning using geographic information system (GIS) software.

To identify waters for which the rule provides new or more stringent uses and temperature criteria, EPA compared criteria and uses designated for salmonid spawning and rearing and bull trout protection for waters under the proposed rule with those criteria and uses that are currently designated by the State of Oregon. The State's current temperature criteria for salmonid rearing is 17.8°C/64.0°F, with no differentiation for core juvenile rearing. The proposed rule establishes a 16°C/61°F temperature criterion for core juvenile rearing (and 18°C/64°F otherwise for rearing). Therefore, EPA's rule provides a more stringent criterion for waters it designates for core juvenile rearing (16°C/61°F), and facilities discharging to these waters may be affected. EPA identified these facilities by overlaying PCS facilities with the waters designated for core juvenile rearing using GIS software.

For salmonid spawning, the current State criterion (12.8°C/55.0°F) is slightly more stringent than the proposed criterion of 13°C/55°F. However, the time period that the criterion applies may differ under EPA's proposed rule. Therefore, EPA assumed that any waters for which it is designating a salmonid spawning period that is earlier or later than currently designated by the State (*e.g.*, current designation from October 1 to May 31, versus a proposed designation from September 1 to June 30) would be affected because a more stringent criterion (*i.e.*, more stringent than the current State salmonid rearing criterion of 17.8°C/64.0°F would apply during the extended time period. Facilities discharging to these waters may be impacted. EPA identified these facilities by overlaying PCS facilities in a GIS map with the waters for which an earlier or later salmonid spawning period applies under the rule.

For antidegradation, the State already has an antidegradation policy in place. This rule would primarily affect the methods by which a review would occur in high quality waters. EPA assumed that facilities discharging to streams not listed by the State as impaired waters (*i.e.*, not on the 303(d) list) are affected. Although high-quality waters are not yet identified by the State, the unimpaired waters provide a reasonable approximation of high-quality waters (although some portion of these will be ORWs and not affected by the procedures because no lowering of water quality is allowed for ORWs). EPA identified these facilities by overlaying PCS facilities with 303(d) listed waters designated using GIS software. Table IV–1 summarizes the potentially affected facilities by provision. The dischargers are grouped by discharger type (*e.g.*, major or minor) and category (*e.g.*, POTW or industry category). Note that there are some facilities affected by more than one provision.

TABLE IV–1. ESTIMATED NUMBER OF FACILITIES POTENTIALLY AFFECTED BY EACH PROVISIONS OF THE PROPOSED RULE

Category	Number of facilities		
	IGDO [1]	Temperature [2]	Antidegradation [3]
Major POTWs	29	3	14
Major Industrial	14	1	8
Minor Dischargers	149	44	130
Total	192	48	152

[1] Estimated as facilities discharging to waters designated for salmonid spawning, except for portions of the Columbia River where spawning occurs.
[2] Estimated as facilities discharging to waters designated for core juvenile rearing, or an extended (earlier, later, or both) spawning period, under the proposed rule.
[3] Estimated as facilities discharging to waters not on the State's 303(d) list.

B. Method for Estimating Potential Compliance Costs

EPA identified a total of 48 facilities (4 major and 44 minor) that may be potentially affected by the proposed uses and temperature criteria. EPA evaluated all four major facilities and a sample of minor facilities from this group for potential cost impacts associated with the proposed rule. For these sample facilities, EPA assumed that any discharge that results in a downstream temperature greater than 0.14°C/0.25°F above the applicable criterion would require additional controls (current Oregon water quality standards state that a discharge may not cause an increase in the surface water temperature of greater than 0.14°C/0.25°F in waters exceeding the applicable criterion [OAR 340–041–0205 (b)(A)]).

EPA evaluated the effect of the discharge on the receiving water using monthly effluent and receiving water data. When possible, EPA calculated the

average of the maximum 7-day moving averages for each month, or if daily temperature data were not available, EPA evaluated the average of the maximum monthly values. To determine the effect of the discharge on the downstream temperature, EPA calculated the temperature at the edge of the regulatory mixing zone (RMZ) assuming that the background stream temperature is the applicable criterion when the waterbody currently exceeds the criterion. For example, if the receiving water has a proposed designated use of core salmonid rearing and currently has a maximum temperature of 17°C/62.6°F in August, the effluent temperature used in the compliance analysis would be the maximum monthly effluent temperature between July and August, and the stream temperature would be 16°C/61°F. Otherwise, EPA used the maximum receiving water temperature (*i.e.*, average of maximum 7-day moving average temperatures, average of maximum monthly temperatures) in those situations where the waterbody is currently attaining the criterion. In both cases, EPA calculated the dilution ratio from the 7Q10 stream flow (minimum 7-day average flow recurring once in 10 years) and the average dry weather design flow for the facility. EPA's proposed rule specifies that only 25 percent of the 7Q10 flow be used in the dilution calculation in waters not currently attaining the applicable temperature criterion. In many cases, facilities had already calculated dilution ratios through stream modeling (*e.g.*, CORMIX) or mixing zone studies. In these cases, if less than 25 percent of the 7Q10 flow was used in the model, EPA used the facility-calculated value, otherwise, EPA calculated the dilution ratio assuming 25 percent of the stream flow is available for dilution.

EPA estimated the most cost-effective control strategy for each facility to achieve compliance. To estimate the potential costs associated with the controls, EPA used temperature management plans (TMPs) from facilities that have already developed them to determine the necessary controls on point sources to reduce effluent temperatures. Possible controls include process optimization, pollution prevention, land application, and cooling towers. EPA determined costs for these controls from readily available documentation and updated these sources to 2003 dollars.

There are no IGDO data available for any of the affected waters, primarily because methods to measure IGDO have only recently been developed. Therefore, EPA estimated compliance with current and proposed IGDO criteria based on an estimated 3.0 mg/L differential between the IGDO and dissolved oxygen (DO) in the overlying water. Studies cited (Koski, 1965; Hollender, 1981) in EPA's *Ambient Water Quality Criteria for Dissolved Oxygen* (EPA, 1986) indicate that 3.0 mg/L is a good approximation of the differential between water column DO and IGDO. Therefore, EPA believes it is reasonable to assume that a water designated for bull trout juvenile rearing and spawning or salmon and steelhead spawning though fry emergence that has a water column DO concentration of 11.0 mg/L would achieve 8.0 mg/L IGDO. Using this differential, the current Oregon IGDO criterion of 6.0 mg/L corresponds to a minimum instream DO concentration of 9.0 mg/L. EPA's proposed IGDO criterion of 8.0 mg/L corresponds to a minimum instream DO concentration of 11.0 mg/L.

Current Oregon water quality standards specify a minimum water column DO for protection of salmonid spawning is 11.0 mg/L, unless the minimum IGDO (measured as a spatial median) is 8.0 mg/L, then the minimum DO may be 9.0 mg/L. If conditions of barometric pressure, altitude, and temperature preclude attainment of 11.0 or 9.0 mg/L standards, then the minimum DO may be 95 percent of saturation.

EPA's rule only changes the IGDO criterion, and not Oregon's 11.0 mg/L (or 9.0 mg/L) instream DO criteria. Thus, if a stream is meeting the current Oregon water quality standards, based on EPA's *Ambient Water Quality Criteria for Dissolved Oxygen* (EPA, 1986), the stream would also meet the revised EPA criterion, and no costs would be incurred as a result of this part of the rule. If a stream is not meeting the current water quality standards, the costs of attaining compliance would be associated with existing Oregon water quality standards, not as a result of the proposed rule. Therefore, EPA estimated the cost of this provision to be zero.

To develop an estimate of the incremental impact of the antidegradation provision of the proposed rule, EPA first estimated the number of facilities located on newly designated high-quality waters that might request to increase discharges during their permit term. EPA assumed that all waters not on the State's 303(d) list are high quality waters. EPA estimated that 22 major facilities and 130 minor facilities may discharge to high-quality waters. NPDES permits are issued for a period of five years, after which they must be renewed. Therefore, on average, one-fifth (20 percent) or approximately 30 of the 152 existing permit holders will renew their permits each year. Based on the frequency of past Oregon antidegradation reviews and EPA's past experience in calculating costs for its antidegradation rules for other States, EPA assumed that no more than five percent of facilities that discharge to high-quality waters would likely request an increase in an effluent limit to the extent that an antidegradation review would be required when they renew their permit. Given 30 permit renewals per year, less than two facilities would require an antidegradation analysis each year.

Next, EPA estimated the costs of preparing an antidegradation analysis to justify the need to increase discharges for these facilities. Entities seeking an antidegradation review will incur costs to develop financial and economic and social impact analyses, and the State will incur costs to review the analyses and make a determination. EPA assumed that the cost incurred by facilities in complying with the rule is the cost of a preliminary engineering analysis, and the subsequent financial analysis for which EPA provides guidance and a workbook. To estimate the potential analytical costs, EPA first calculated the average capital costs to facilities it identified as requiring additional controls in economic analyses prepared for recent water quality standards actions, including establishing criteria for toxic pollutants and upgrading receiving water use classifications in the States of Alabama, Iowa, California, and Idaho (U.S. EPA, 2001a; 2001b; 1999; and 1997). EPA's estimates of capital costs for these facilities average $1 million for major POTWs, $230,000 for minor POTWs, $2.4 million for major industrial facilities, and $1 million for minor industrial facilities. Thus, preliminary engineering analysis and financial analysis costs could range between $10,000 and $72,000 for major facilities, and between $2,300 and $30,000 for minor facilities (*see* Table IV–2). EPA did not estimate costs for installing additional control measures or limiting increased discharges because EPA would have to speculate on the multiple unknown factors including the type of facility, the pollutants being discharged, the water body in question, the requested increase in discharge, the control technologies currently being implemented, the alternative control technlogies considered, and the State's decision following review of the antidegradation analyses.

TABLE IV–2. ESTIMATED COST PER FACILITY TO PREPARE ANTIDEGRADATION REVIEW

Cost	Municipal facilities (POTWs)		Industrial facilities	
	Major	Minor	Major	Minor
Installed Controls [1]	$1,000,000	$230,000	$2,400,000	$1,000,000
Low Estimate of Review Cost [2]—(1% of Installed Capital Cost)	10,000	2,300	24,000	10,000
High Estimate of Review Cost [2]—(3% of Installed Capital Cost)	30,000	6,900	72,000	30,000

[1] Average capital costs to facilities that EPA identified as requiring additional pollution controls in analyses of recent water quality standards actions, including establishing criteria for toxic pollutants and upgrading receiving water use classifications, in the States of Alabama, Iowa, California, and Idaho (U.S. EPA, 2001a; 2001b; 1999; 1997).
[2] Use of 1 and 3 percent of Installed Capital Cost based on EPA's best professional judgment.

Costs for the proposed antidegradation provision will include the cost of the State review. EPA assumed that the State's review of the engineering cost analysis and financial impact analysis could require up to 24 hours, and that the notification and response to comments activities will require an average of 100 hours. Thus, based on a national average hourly compensation rate of $42.24 for State and local government workers in professional speciality and technical occupations, the average cost per review is $5,200.

C. Results

EPA estimated the potential costs associated with the temperature, IGDO, and antidegradation provisions of the proposed rule separately. For the temperature provision, there are 48 potentially affected facilities. EPA estimated costs for all affected major facilities individually, and estimated costs for affected minor facilities by extrapolating costs from a sample. EPA estimated that the potential total Statewide annual cost associated with proposed temperature criteria will be approximately $198,900.

EPA estimated that the potential cost associated with the proposed IGDO criterion is zero. This estimate is based on compliance with current State standards.

For the antidegradation provision, EPA estimated that the potential annual costs range from $22,500 to $50,900. This estimate is based on combined entity and State costs for two antidegradation reviews per year.

D. Total Statewide Costs Associated with NPDES Permitted Entities

The following table summarizes the total estimated potential Statewide costs of today's proposed rule associated with NPDES permitted entities.

TABLE IV–3. TOTAL ESTIMATED ANNUAL STATEWIDE COSTS ATTRIBUTABLE TO THE PROPOSED RULE ($2003/YR)

Provision	Estimated annual cost [1]
Temperature Uses and Criteria	$198,900
IGDO Criteria	$0
Antidegradation Procedures	$22,500–50,900
Total	$221,400–249,800

[1] Costs are annualized at 7 percent over 20 years.

EPA recognizes that the potential indirect costs to nonpoint sources associated with the State's implementation of these proposed water quality standards may be higher than the costs EPA has estimated since temperature exceedences on the affected water bodies could also result from nonpoint source activities. Major categories of sources that may be affected by the State's implementation of this proposed rule include forestry and agriculture, as well as dams. EPA has not quantified these costs.

E. Small Government and Business Analysis

Today's proposed rule establishes no requirements applicable to small entities, and so is not susceptible to regulatory flexibility analysis as prescribed by the Regulatory Flexibility Act. EPA has nonetheless considered the potential effects of this rule on small entities to the extent that it can, and has included that analysis in the administrative record of this rulemaking. EPA evaluated the potential economic impacts for the facilities that discharge to waters of the State of Oregon and used this information to develop the cost estimate for the proposed rule. EPA estimates that, depending on Oregon's implementation, as many as 128 small municipal entities and 85 business entities could be affected by one or more provisions of the proposed rule. Data are not available to determine if those 85 businesses potentially affected by the proposed rule would be classified as small, or what percent of revenues the estimated costs would represent. Nonetheless, EPA's analysis indicates that, depending on Oregon's implementation, only 29 small municipal entities and 13 business entities could incur costs under the temperature provision, and only 1 to 2 small municipal or business entities could incur antidegradation costs in an average year.

EPA calculated the ratio of potential compliance costs to estimated revenues for the small municipalities using the annualized facility-specific cost estimates described above, actual municipal revenues for facilities potentially affected by the temperature provision, and estimates of annual municipal revenues for facilities affected by other provisions. The estimates are based on 2002 municipal population data and a mean per capita municipal revenue estimate of $860 that EPA derived from the municipalities potentially affected by the temperature provision.

Based on its estimated costs of the proposed rule, and possible Oregon implementation, EPA observed that three small municipal entities could incur costs that equal or exceed 1 percent of revenues. For two of these entities, costs may equal or exceed 3 percent of revenues (the ratios are 4.5 percent and 8.3 percent).

V. Alternative Regulatory Approaches and Implementation Mechanisms

A. Background

Data and information may become available after the date of this rulemaking that will be material to water quality standards for Oregon. There are several mechanisms available to ensure that the water quality standards and their implementing mechanisms appropriately take into account such new information. These

mechanisms are described in sections B through E below.

The State should be aware, however, that EPA considers designated use changes and site-specific criteria to be modifications to the State's water quality standards. Federal regulations at 40 CFR 122.44(d)(1) require that NPDES permits include limitations necessary to achieve water quality standards adopted under section 303 of the CWA. Therefore, a designated use change or a site-specific criterion cannot be the basis for NPDES permit limitations until the State has adopted it as part of its water quality standards, has submitted it to EPA, and EPA has approved it. See 40 CFR 131.21(c) and (d). EPA would also need to withdraw any corresponding Federal use designation or criteria. As with any other revision to the State's water quality standards, EPA will review these revisions to determine whether they are scientifically-defensible in accordance with 40 CFR 131.11(b)(1)(iii), or meet the requirements of 40 CFR 131.10(g), as applicable. EPA will also consider whether the appropriate procedural requirements have been met, such as public participation and certification by the appropriate legal authority within the State.

While 40 CFR 131.13 allows States to adopt variances for State-adopted water quality standards, States do not have authority to change Federal regulations. Thus, State procedures may not be used to modify Federally-promulgated water quality standards. Consequently, EPA has included in today's proposed rule a Federal variance provision allowing the Region 10 Administrator to grant water quality standards variances where a person submits data indicating that an EPA-designated use is not attainable for any of the reasons in 40 CFR 131.10(g). This process is discussed in greater detail in section V.C.

B. Process for Federal Agencies Responsible for Federally Owned or Operated Dams To Request EPA Modify Water Quality Standards

The process EPA used to propose designations for the salmonid uses and setting the numeric criteria described above utilized the best scientifically credible data available to date on the water quality requirements of various life stages of salmonids. However, this data did not include the type of data that is generally considered in a waterbody-specific use attainability analysis. EPA recognizes that new and/or more accurate data may become available that would support changes to the standards on a particular water body, including data and information regarding the attainability of EPA's proposed use designations for specific waters. In the course of developing this proposal, EPA was approached by several Federal agencies that own or operate Federal dams with questions about the information requirements and the process for incorporating data on use attainability into the process for determining designated uses proposed by EPA in this rule. Specifically, these agencies indicated that they may submit information involving Federal dams during the public comment period for this rule or after promulgation. Also, they sought to better understand the information needs and process EPA would follow in considering a change in a designated use for water bodies in Oregon where Federal dams are operating.

During the public comment period, EPA will review and consider the information and the need for changes in the standards prior to promulgation. EPA recognizes that the existence of Federally-owned or operated dams in a watershed may alter the thermal regime of the associated stream system, and that even after all feasible and practicable measures to reduce thermal impacts are implemented, in some cases, attainment of certain water quality standards for temperature may not be feasible. Water quality standards should be feasibly attainable given the existence and operation of these Federally owned or operated dams. Feasibility should include consideration of whether there are reasonable alternative operations, structural modifications, or maintenance approaches a Federally-owned or operated dam could implement and still fulfill its authorized purpose. In order to be responsive to the questions raised about how EPA would handle such information after the close of the comment period and after promulgation, EPA is proposing in this rule EPA's preferred process for Federal agencies that own or operate dams to petition EPA to revise standards for water bodies covered by this rule.

EPA is mindful that the time constraints under which EPA must take final action on WQS by March 2, 2004, will, no doubt, limit the opportunities for Federal agencies which own or operate dams to develop and provide information to EPA and for EPA to fully consider any such information prior to the deadline for taking final action. Ideally, such information would be considered up-front in designating uses and establishing water quality criteria. In reality, precise information may not be available in advance because of lack of data on natural variability, varying weather and flow conditions and the difficulty in predicting the impacts on water quality of feasible management measures. Therefore, EPA is proposing to establish within the rule a process by which Federal agencies that own or operate dams may present information regarding the effect of the presence and operation of specific dams on the attainability of uses that EPA promulgates for specific waters, and petition EPA to amend standards if EPA, in coordination with the regulated agency, determines the uses are not attainable.

EPA is including this provision for those Federally-owned or operated dams because EPA believes it is important to ensure that designated uses properly account for the presence of dams, whose purposes include, but are not limited to, flood control, irrigation, navigation, and power generation that Congress has specifically authorized. EPA wants to ensure that the use designations that it adopts under the CWA for waters in Oregon fully consider any available information regarding the effects of dams that have been specifically authorized by Congress to be constructed and operated on those same waters. A clear process in the rule for these Congressionally-authorized dams will allow EPA to address expeditiously a request from another Federal agency regarding modification of a promulgated use designation based on the effects of the presence and operation of a particular dam.

EPA's current WQS regulations at 40 CFR 131.10(g) list six factors that may be used as a basis for removing a designated use that is not an existing use if it can be demonstrated that attaining the designated use is not feasible because of one of those six factors. One of those factors specifically relates to dams. 40 CFR 131.10(g)(4) provides that a designated use may be removed if ''dams * * * preclude the attainment of the use, and it is not feasible to restore the water body to its original condition or to operate [the dam] in a way that would result in attainment of the use.'' EPA believes that it is important to establish a process in this regulation to clarify how a Federal agency that owns or operates a Federal dam may present information to EPA if the Federal agency believes that a standard promulgated as a result of this rulemaking is not attainable due to the presence and operation of a Congressionally-authorized dam and it is not feasible to operate the dam in a way that would result in attainment of the use.

It should be noted that EPA's current regulations also provide that at a minimum uses are deemed attainable if they can be achieved by the application of technology-based effluent limitations on point source dischargers required under CWA section 301(b) and 306 and cost-effective and reasonable best management practices for nonpoint source control. 40 CFR 131.10(d) and (h). Pursuant to this regulation, EPA would take into consideration the controls being implemented by other sources on a specific waterbody or segment in determining the attainability of any use.

Federal Agency Submission to EPA

In proposed 40 CFR 131.39(g), EPA provides a process by which a Federal agency responsible for a Federally-owned or operated dam may petition EPA to revise a water quality standard.

Federal Agency Documentation

First, proposed 40 CFR 131.39(g)(1) provides that the petition must be based on a demonstration that the operation of the dam precludes the attainment of the use, that reasonable alternatives are not feasible to restore the water to its original condition, and, that there are no feasible and practicable changes to the operation, maintenance or structure of the dam, consistent with the purposes for which it was authorized by Congress, that can be implemented that would result in attainment of the water's designated use. This language approximates the language in EPA's current regulation at 40 CFR 131.10(g)(4). As discussed below, in response to a petition, EPA will conduct a use attainability analysis (UAA) and determine whether the promulgated use is attainable. The information provided by the Federal agency with the petition will be critical to EPA's decision.

EPA expects that this demonstration would include a description of the current function and purpose of the dam (and how well the dam is performing its intended function). Further, EPA expects that this demonstration will include a discussion of potential changes in operation or maintenance of the dam and potential structural modifications, accompanied by results of trial runs where practicable, an engineering analysis, and results of modeling. EPA also expects that the demonstration would show how much improvement towards attainment of the standard could be expected from feasible and practicable alterations. This information would be relevant to EPA should it decide to revise the standard. Federal agencies that own or operate dams in Oregon must provide EPA with the following information as specified in today's proposed rule at 40 CFR 131.39(g)(2):

(1) The current purpose and function of the dam including information on how well the dam is performing in meeting the established purpose and function;

(2) Any feasible, practicable alternatives to current operation and maintenance of the dam that could improve water quality, including coordination of operations between dams;

(3) Any feasible, practicable structural modifications to the dam that could improve water quality; and

(4) Any relevant studies of the above factors.

In addition, Federal agencies that own or operate dams in Oregon are encouraged to consider and submit any results from the following analyses to expedite EPA's use attainability determination:

- With regard to the analysis of any feasible, practicable alternatives to current operation and maintenance of the dam
- Have alternative methods of operating turbines been utilized or explored to encourage better mixing where there is a horizontally- or vertically-stratified forebay?
- Have modifications to flood control rule curves been used or explored to allow additional flows in the summer months without impacting refill?
- Have modifications to upper reservoir refill probabilities been used or explored to allow additional flows in the summer months?
- Have reductions in the cross-section areas of the water columns behind the dams been utilized or explored? [Such reductions could, in turn, reduce the resident time for water particles, which reduces exposure times and surface area, which also reduces exposure history. This is related to increasing velocity, which can be done either by increasing flows, or decreasing area. Q(flow) = V(velocity) × A(area)]
- With regard to the analysis of any feasible, practicable structural modifications to the dam, have low level outlet controls been used or explored to allow selective withdrawals resulting in temperature improvements in the waterbody?

Federal Agency Public Process

Second, proposed 40 CFR 131.39(g)(1)(iii) provides that the responsible Federal agency provide an opportunity for the affected jurisdictions and public to comment on a draft of the agency's demonstration and to submit any additional information or analyses (*e.g.*, analyses of how trading could improve water quality) before it is submitted to EPA. EPA expects that the Federal agency would take these comments into consideration in preparing a final demonstration that it will submit to EPA in support of its petition to revise one or more water quality standards. The proposed rule would also require that the Federal agency submit to EPA the Federal agency's response to the comments that the agency received during its public comment process.

EPA's Process for Responding to Petitions

Once the complete petition is submitted to EPA, 40 CFR 131.39(g)(3) of the proposed rule would provide that EPA will conduct a UAA, determine if a change in water quality standards is appropriate, and respond to the petitioning agency within nine months. In making such a determination, EPA will carefully consider all of the information provided by the Federal agency and any comments by the affected jurisdictions and public. 40 CFR 131.39(g)(4) would provide that if EPA determines after developing a UAA that the promulgated standards should be revised, EPA will propose to amend the promulgated standards through a Federal rulemaking and take final action within 15 months. EPA may also extend either of these deadlines if a large number of petitions are received during this time. If EPA determines that the standards do not need to be revised, proposed 40 CFR 131.39(g)(5) provides that EPA will respond to the petition by providing its reasons for not proposing to revise the standards.

If EPA determines that a use revision is appropriate and the use revision may affect threatened or endangered species, EPA would need to consult with NOAA Fisheries and/or FWS under section 7 of the ESA. EPA is consulting with the Services regarding the promulgation of today's rule. EPA also consults with affected Tribes if designating a use that requires less stringent criteria.

Federal agencies that own or operate dams have also expressed concern over the status and potential legal vulnerability of dams during the period that EPA is considering a petition submitted under this provision. EPA requests comment on how it might address this concern in the rule.

Availability of the Petition Process to Entities Besides Federally-Owned or Operated Dams

Of course, any person may petition EPA to revise a water quality standard that EPA promulgates. Any of the six

factors at 40 CFR 131.10(g) may serve as the basis for removing a designated use as long as it is demonstrated that it is not feasible to attain the use. As discussed above, EPA is proposing to include specific provisions in this rule related to the condition regarding dams in 40 CFR 131.10(g)(4) to address Federally-owned or operated dams in recognition of the specific congressional authorization for the construction and operation of such dams. It was recognized that the tight deadlines under which EPA must propose and promulgate water quality standards for temperature in Oregon waters may not provide adequate time for the other Federal agencies to gather information related to the possible effects of Federally-owned or operated dams on the attainability of EPA's water quality standards or for EPA to fully evaluate any information that may be generated. Therefore, EPA is proposing to set out a process, as previously described, by which the submission of such information by another Federal agency and consideration by EPA would take place.

C. Variances

Water quality standards variances are a mechanism that can temporarily modify water quality standards. Today's rule contains a Federal variance procedure for the designated uses being proposed today. However, the procedures described later in this section can also be used by the State to develop variances for State-adopted water quality standards.

EPA believes variances are particularly suitable when the cause of nonattainment is discharger-specific and it appears that the designated use in question will eventually be attained or demonstrated to be nonattainable. EPA has approved the granting of water quality standards variances to NPDES permitted entities by States in circumstances that would otherwise justify changing a use designation on the grounds of unattainability (*i.e.*, one or more of the six circumstances contained in 40 CFR 131.10(g) is met). In contrast to a change in standards that removes a use designation for a water body, a water quality standards variance applies only to the NPDES permitted discharger to whom it is granted and only to the pollutant parameter(s) upon which the finding of unattainability is based, and only for a limited period of time. The underlying standard remains in effect for all other CWA purposes.

The practical effect of such a variance is to allow an NPDES permit to be written using less stringent criteria, while encouraging ultimate attainment of the underlying standard. A water quality standards variance provides a mechanism for assuring compliance with sections 301(b)(1)(C) and 402(a)(1) of the CWA, while granting temporary relief to point source dischargers.

While 40 CFR 131.13 allows States to adopt variance procedures for State-adopted water quality standards, because States cannot amend Federal law, such State procedures may not be used to grant variances for Federally-adopted standards. EPA believes that it is appropriate to provide comparable Federal procedures here. Through today's proposed rule, the Region 10 Regional Administrator may grant water quality standards variances where a person submits data indicating that an EPA-designated use proposed at 40 CFR 131.39(b) is not attainable for any of the reasons at 40 CFR 131.10(g).

Today's proposed rule spells out the process for applying for and granting such variances. Authorizing the Regional Administrator to grant variances should expedite the processing of variance requests. That process is contained in proposed 40 CFR 131.39(h) of today's rule. EPA also proposes that the Regional Administrator provide public notice of the proposed variance and provide an opportunity for public comment. EPA understands that variance-related issues can often arise in the context of permit issuance. EPA Region 10 will seek to work closely with the State permitting authorities to ensure that variance requests will be considered in tandem with the State NPDES permitting process.

The variance procedures proposed today requires an applicant for a water quality standards variance to submit a request to the Regional Administrator (or his/her delegatee) with supporting information. Under this rule, as in the national program, the burden is on the applicant to demonstrate to EPA's satisfaction that the designated use is unattainable for one of the reasons specified in 40 CFR 131.10(g). EPA believes that because a variance results in a temporary change to the designated use, the demonstrations needed to justify a variance should be analogous to those needed to justify removing the use entirely. A variance may not be granted if the use can be attained, at a minimum, by all dischargers implementing effluent limitations required under sections 301(b) and 306 of the CWA and the nonpoint sources implementing reasonable best management practices for nonpoint source control as required by the State. In addition, a variance may not be granted if it would likely jeopardize the continued existence of any threatened or endangered species listed under section 4 of the ESA or result in the destruction or adverse modification of such species' critical habitat.

Under this rule, a variance may not exceed three years or the term of the NPDES permit, whichever is less. A variance may be renewed if the permittee again demonstrates that the use in question is still not attainable. Renewal of the variance may be denied if EPA finds that the conditions of 40 CFR 131.10(g) are not met.

D. Heat Load and Thermal Plume Provisions

1. Heat Load Limit

Questions often arise regarding how to interpret water quality standards when implementing the standards under the CWA. EPA believes that with respect to this proposed rule, questions may arise during NPDES permitting or TMDL establishment as to whether the water quality temperature criteria proposed here would be attained in impaired waters by authorizing effluent limitations or establishing waste load allocations or load allocations that allow an insignificant addition of heat to impaired waters. In today's proposal, EPA is including a provision that would allow for insignificant additions of heat by anthropogenic sources to water bodies or segments that exceed the applicable temperature criterion. While this provision is not a water quality standard under CWA section 303(c), this provision will assist regulatory authorities in carrying out their responsibilities under sections 303(d) and 402 of the CWA. Specifically, EPA proposes that the addition of heat from anthropogenic sources will be determined to be insignificant if all such additions cumulatively, at the point of maximum impact, cause an instream temperature increase of 0.3°C/0.5°F or less above the otherwise applicable criterion. In addition, no single point source may cause, by itself, an instream temperature increase of 0.3°C/0.5°F or more above the otherwise applicable criterion assuming complete mixing with 25 percent of the river flow.

There are several approaches that the State may take to assure that these conditions are met. For example, to calculate the impact of single sources, the State may use a simple energy balance equation to calculate a point source effluent limitation that would meet the heat load limit, assuming the upstream temperature is at the otherwise applicable criterion, and calculating an end-of-pipe effluent limit that would result in an 0.3°C/0.5°F

increase above the applicable criterion after complete mixing of the effluent with 25 percent of the river flow. To calculate the impact of multiple sources, the State may conduct a modeling evaluation.

EPA believes that this provision will continue to protect the uses proposed to be designated by this rule. Allowing sources to no more than an increase of 0.3°C/0.5°F is not significant in view of the accuracy of temperature measurement instruments and the variability of monitoring field protocol techniques. (''Water Quality Monitoring Technical Guide Book,'' Oregon Plan for Salmon and Watersheds, July 1999, pp 6–3; ''Monitoring Guidelines to Evaluate Effects of Forestry Activities on Streams in the Pacific Northwest and Alaska,'' EPA/910/9–91–001, May 1991. pp 73–76). Furthermore, the scientific studies assessing the effects of temperature on salmon species which form the basis for the Regional Temperature Guidance and this rulemaking, are at a level of resolution of 1°C/2°F (or more). For the previously stated reasons, allowing an increase of 0.3°C/0.5°F will protect the uses proposed in this rule.

Even though EPA believes this incremental heating of 0.3°C/0.5°F or less above the otherwise applicable criterion will have no adverse effect on the designated uses, even in impaired waters, such incremental heating would not be allowed by the water quality standards without this provision. EPA believes, however, that it is important for the water quality standards to allow such insignificant heat additions, as long as they meet the thermal plume provisions in proposed 40 CFR 131.39(e)(2), because of their insignificant adverse effect on the designated uses, and the adverse economic and/or environmental impacts of either prohibiting such discharges or requiring that they be cooled prior to discharge.

2. Thermal Plume

EPA's regulation at 40 CFR 131.13 recognizes that States have the discretion to adopt regulations authorizing mixing zones around point source outfalls, which are limited zones in which otherwise applicable criteria may be exceeded, subject to conditions that assure the protection of the designated use in the waterbody as a whole. In the case of temperature, areas surrounding point source outfalls could experience ''thermal plumes'' in which water temperatures exceed the otherwise applicable temperature criteria. In this rule, EPA proposes conditions on such thermal plumes to protect the designated uses by preventing instantaneous lethality, thermal shock, migration blockage, or adverse impact to salmon and trout spawning areas in order to protect the designated uses proposed in this rule.

EPA is proposing that for any permitted point source discharge of heat that the discharge meet the conditions described in proposed 40 CFR 131.39(e)(2). These provisions describe conditions that must be avoided in order to protect salmonids from adverse impacts. As such, EPA is proposing that these provisions apply to all NPDES-permitted dischargers, regardless of whether the permittee is discharging to a water body that is attaining or not attaining its temperature water quality criterion. In the former case (*i.e.*, where a water body is meeting its water quality standards), these provisions would work in conjunction with the State's existing mixing zone policy contained in its regulation to govern the calculation of effluent limitations for point sources.

The proposed regulation is designed to ensure that thermal plumes from point sources do not cause instantaneous lethal temperatures; thermal shock; migration blockage; adverse impact on spawning, egg incubation, and fry emergence areas; or the loss of localized cold water refugia. Based on the scientific literature's finding that certain conditions may cause adverse impacts in salmonids, EPA believes these provisions are appropriate to protect these species from conditions that may exist due to a point source discharge. The following paragraphs summarize the scientific literature and how the findings relate to EPA's proposed regulations.

- Exposures of less than ten seconds at 32°C/89.6°F can cause instantaneous lethality. (Washington Department of Ecology, December 2002, ''Evaluating Standards for Protection of Aquatic Life in Washington's Surface Water Quality Standards, Temperature Criteria, Draft Discussion Paper and Literature Summary,'' pp. 105–108). Therefore, EPA has proposed that the maximum temperature within the plume after two seconds of travel from the point of discharge does not exceed 32°C/90°F.
- Thermal shock, which leads to increased predation, can occur when salmon and trout exposed to near optimal temperatures (*e.g.*, 15°C/58°F) experience a sudden temperature increase to 26–30°C/79–86°F for a short period of time. (Coutant, Charles, 1973, Effect of thermal shock on vulnerability of juvenile salmonids to predation, J. Fish. Res. Board Can. 30(7):965–973.). Therefore, EPA is proposing that thermal plumes be conditioned to limit the cross-sectional area of a river that exceeds 25°C/77°F to five percent of the river.
- Adult migration blockage conditions can occur at 21°C/70°F. See Table III–1. Therefore, EPA is proposing that the cross-sectional area of a river at or above 21°C/70°F be limited to less than 25 percent or, if upstream temperature exceeds 21°C/70°F, the thermal plume be limited such that 75 percent of the cross-sectional area of the river has less than a *de minimis* (*e.g.*, 0.3°C/°0.5F) temperature increase.

Adverse impacts on salmon and trout spawning, egg incubation, and fry emergence can occur when the temperatures exceed 13°C/55°F. *See* Table III–1. Therefore, EPA is proposing that the thermal plume be limited so that temperatures exceeding 13°C/55°F do not occur in the vicinity of active spawning and egg incubation areas, or that the plume does not cause more than a *de minimis* increase in the river temperature in these areas.

Determining whether or not a preliminary effluent limitation will result in localized impacts from the thermal plume can be achieved through plume modeling. The physical characteristics of the thermal plume (*e.g.*, a three-dimensional profile of temperatures) can be estimated using a near-field dilution model and adequate input data to run the model (*e.g.*, river and effluent temperatures and flows). If the model indicates that the preliminary effluent limitation is likely to result in any of the localized adverse impacts described above, the preliminary effluent limit must be lowered to ensure that such impacts are avoided or minimized.

E. EPA's Basis for Allowing Flexibility Due to Unusually Warm Weather Conditions

EPA is proposing that a waterbody shall not be determined to be a water quality-limited segment for CWA section 303(d) listing purposes if the maximum 7DADM temperature for the year with the second highest maximum 7DADM from a complete data record of 10 years is at or below the applicable criterion. EPA recognizes that historically, there were years of drought and unusually high air temperatures. When those conditions occurred, water temperatures were also elevated. Further, EPA believes it is reasonable for a State or Tribe to decide not to apply the numeric temperature criteria during unusually warm conditions for purposes of determining if a waterbody is attaining criteria (*i.e.*, for the purposes of making decisions under CWA section 303(d) or 305(b)). EPA believes such a provision is justified because unusually

warm annual peaks in water temperature typically caused by drought conditions are a natural component of the environment and that these infrequent conditions should not drive attainment determinations. Salmonids may experience some adverse effects during these periods, but by definition, they would be infrequent. It is important to note, however, that NPDES-permitted facilities would continue to be subject to the same temperature effluent limits they would be subject to during normal temperature periods, because they should not be able to discharge more heat than they would otherwise be authorized to discharge simply due to a natural event.

Even when accounting for unusually warm conditions in temperature standards, attainment determinations should be based on all climatic conditions except for those unusually warm and rare conditions in order to protect the salmonid designated uses. Thus, given that river temperatures exhibit year-to-year variation in their maximum 7DADM values, the average maximum 7DADM value from a yearly series, as a statistical matter, would need to be lower than the numeric criteria in order to meet the criteria nine out of ten years. Therefore, in most years, the maximum 7DADM temperature would also need to be lower than the numeric criteria in order to meet the criteria in the warm years. EPA took this into consideration when it formulated its proposed numeric criteria.

F. Total Maximum Daily Loads and Impaired Water Listings

A TMDL is a tool created by the CWA that expresses the total amount of a given pollutant that a particular water body may receive and still achieve applicable water quality standards. Section 303(d) of the CWA and its implementing regulations at 40 CFR part 130 establish the requirements for TMDLs. The TMDL process can broaden the opportunity for public participation, expedite water quality-based NPDES permitting, and lead to technically-sound and legally-defensible decisions for attaining and maintaining water quality standards. In addition, the TMDL process provides a mechanism for integrating the management of both point and nonpoint pollution sources that together may contribute to a water body's impairment. (*See Guidance for Water Quality-Based Decisions: The TMDL Process,* EPA 440–4–91–001, April 1991.)

If Oregon lists waters subject to today's proposed rule on its CWA section 303(d) list(s) because data or information indicate that water quality standards have not been achieved, EPA recognizes that this listing decision does not mean that a TMDL will immediately be developed. Rather, CWA section 303(d)(1) specifically provides States with the discretion to establish a priority ranking for TMDL development for listed waters, and then to establish TMDLs in accordance with that ranking. EPA notes that even if Oregon establishes a TMDL for a water body designated today for salmonid lifestage uses, the question of implementing the TMDL with respect to nonpoint sources and point sources not required to obtain an NPDES permit is entirely a matter of State law.

As discussed elsewhere in today's proposal, EPA strongly encourages the State of Oregon to adopt the appropriate uses for all of the waters subject to this rulemaking. Once EPA approves the State's adoption of a new use designation for a water body, and withdraws that water body from the Federal regulation, the State's use designation will be the applicable use for that water body for purposes of compiling the CWA section 303(d) list. Oregon will be required to list that water body under CWA section 303(d) if data and information show that the use is impaired or the water body exceeds the applicable water quality criteria for temperature or IGDO for the protection of the associated salmonid uses.

For waters that have salmonid use designations (either Federal or State) at the time Oregon assembles its CWA section 303(d) list(s), EPA notes that Oregon need not include a water on its list(s) if it lacks data and information to determine whether the use is being attained, or if the data and information it has is insufficient to make that determination. *See* 40 CFR 130.7(b)(5); ''2004 Integrated Water Quality Monitoring and Assessment Report Guidance.'' While EPA expects Oregon to follow the requirements, if any, of its assessment and listing methodology, EPA also recognizes that it is possible that at the time Oregon compiles its 2004 CWA section 303(d) list, it will not have data or information for all of the waters designated by this rule for salmonid life stage uses. Therefore, it is possible that many of these waters will not appear on Oregon's next CWA section 303(d) list(s).

VI. Statutory and Executive Order Reviews

A. Executive Order 12866: Regulatory Planning and Review

Under Executive Order 12866 (58 FR 51735, October 4, 1993), the Agency must determine whether the regulatory action is ''significant'' and therefore subject to OMB review and the requirements of the Executive Order. The Executive Order defines ''significant regulatory action'' as one that is likely to result in a rule that may:

(1) Have an annual effect on the economy of $100 million or more or adversely affect in a material way the economy, a sector of the economy, productivity, competition, jobs, the environment, public health or safety, or State, local, or Tribal governments or communities;

(2) Create a serious inconsistency or otherwise interfere with an action taken or planned by another agency;

(3) Materially alter the budgetary impact of entitlements, grants, user fees, or loan programs or the rights and obligations of recipients thereof; or

(4) Raise novel legal or policy issues arising out of legal mandates, the President's priorities, or the principles set forth in the Executive Order.

It has been determined that this rule is not a ''significant regulatory action'' under the terms of Executive Order 12866 and is therefore not subject to E.O. 12866 review.

B. Paperwork Reduction Act

This proposed action does not impose an information collection burden under the provisions of the Paperwork Reduction Act, 44 U.S.C. 3501 *et. seq.* It does not include any information collection, reporting or recordkeeping requirements. Burden means the total time, effort, or financial resources expended by persons to generate, maintain, retain, or disclose or provide information to or for a Federal agency. This includes the time needed to review instructions; develop, acquire, install, and utilize technology and systems for the purposes of collecting, validating, and verifying information, processing and maintaining information, and disclosing and providing information; adjust the existing ways to comply with any previously applicable instructions and requirements; train personnel to be able to respond to a collection of information; search data sources; complete and review the collection of information; and transmit or otherwise disclose the information.

An agency may not conduct or sponsor, and a person is not required to respond to a collection of information

unless it displays a currently valid OMB control number. The OMB control numbers for EPA's regulations in 40 CFR are listed in 40 CFR part 9.

C. Regulatory Flexibility Act

The Regulatory Flexibility Act (RFA) as amended by the Small Business Regulatory Enforcement Fairness Act of 1996 (SBREFA) (5 U.S.C. 601 *et. seq.*), generally requires an agency to prepare a regulatory flexibility analysis of any rule subject to notice and comment rulemaking requirements under the Administrative Procedure Act or any other statute unless the agency certifies that the rule will not have a significant economic impact on a substantial number of small entities. Small entities include small businesses, small organizations and small governmental jurisdictions.

For purposes of assessing the impacts of today's proposed rule on small entities, a small entity is defined as: (1) A small business according to RFA default definitions for small business (based on SBA size standards); (2) a small governmental jurisdiction that is a government of a city, county, town, school district or special district with a population of less than 50,000; and (3) a small organization that is any not-for-profit enterprise which is independently owned and operated and is not dominant in its field.

After considering the economic impacts of today's proposed rule on small entities, I certify that this rule will not have a significant economic impact on a substantial number of small entities. This proposed rule would not impose any requirements on small entities.

The RFA requires analysis of the impacts of a rule on the small entities subject to the rule's requirements. *See United States Distribution Companies* v. *FERC,* 88 F.3d 1105, 1170 (D.C. Cir. 1996). Today's proposed rule establishes no requirements applicable to small entities, and so is not susceptible to regulatory flexibility analysis as prescribed by the RFA. (''[N]o [regulatory flexibility] analysis is necessary when an agency determines that the rule will not have a significant economic impact on a substantial number of small entities *that are subject to the requirements of the rule,'' United Distribution* at 1170, quoting *Mid-Tex Elec. Co-op* v. *FERC,* 773 F.2d 327, 342 (D.C. Cir. 1985) (emphasis added by *United Distribution* court).)

Under the CWA water quality standards program, States must adopt water quality standards for their waters and must submit those water quality standards to EPA for approval; if the Agency disapproves a State standard and the State does not adopt appropriate revisions to address EPA's disapproval, EPA must promulgate standards consistent with the statutory requirements. EPA also has the authority to promulgate water quality standards in any case where the Administrator determines that a new or revised standard is necessary to meet the requirements of the Act. These State standards (or EPA-promulgated standards) are implemented through various water quality control programs including the NPDES program, which limits discharges to navigable waters except in compliance with an NPDES permit. The CWA requires that all NPDES permits include any limits on discharges that are necessary to meet applicable water quality standards.

Thus, under the CWA, EPA's promulgation of water quality standards establishes standards that the State implements through the NPDES permit process. The State has discretion in developing discharge limits as needed to meet the standards. While the State's implementation of Federally promulgated water quality standards *may* result in new or revised discharge limits being placed on small entities, the standards themselves do not apply to any discharger, including small entities.

Today's proposed rule, as explained earlier, does not itself establish any requirements that are applicable to small entities. As a result of this action, the State of Oregon will need to ensure that permits it issues include any limitations on discharges necessary to comply with the standards established in this rule. In doing so, the State will have a number of choices associated with permit writing. While Oregon's implementation of the rule may ultimately result in some new or revised permit conditions for some dischargers, including small entities, EPA's action today does not impose any of these as yet unknown requirements on small entities.

D. Unfunded Mandates Reform Act

Title II of the Unfunded Mandates Reform Act of 1995 (UMRA), Pub. L. 104–4, establishes requirements for Federal agencies to assess the effects of their regulatory actions on State, local, and Tribal governments and the private sector. Under section 202 of the UMRA, EPA generally must prepare a written statement, including a cost-benefit analysis, for proposed and final rules with ''Federal mandates'' that may result in expenditures to State, local, and Tribal governments, in the aggregate, or to the private sector, of $100 million or more in any one year. Before promulgating an EPA rule for which a written statement is needed, section 205 of the UMRA generally requires EPA to identify and consider a reasonable number of regulatory alternatives and adopt the least costly, most cost-effective or least burdensome alternative that achieves the objectives of the rule. The provisions of section 205 do not apply when they are inconsistent with applicable law. Moreover, section 205 allows EPA to adopt an alternative other than the least costly, most cost-effective or least burdensome alternative if the Administrator publishes with the final rule an explanation of why that alternative was not adopted. Before EPA establishes any regulatory requirements that may significantly or uniquely affect small governments, including Tribal governments, it must have developed under section 203 of the UMRA a small government agency plan. The plan must provide for notifying potentially affected small governments, enabling officials of affected small governments to have meaningful and timely input in the development of EPA regulatory proposals with significant Federal intergovernmental mandates, and informing, educating, and advising small governments on compliance with the regulatory requirements.

Today's proposed rule contains no Federal mandates (under the regulatory provisions of Title II of the UMRA) for State, local or Tribal governments or the private sector. The rule imposes no enforceable duty on the State or any local or Tribal government or the private sector; rather, this rule promulgates criteria and designated uses for certain waterbodies in Oregon, which constitute water quality standards for those waterbodies. The State may use these resulting water quality standards in implementing its water quality control programs. Today's proposed rule does not regulate or affect any entity and, therefore, is not subject to the requirements of sections 202 and 205 of the UMRA.

EPA has determined that this proposed rule contains no regulatory requirements that might significantly or uniquely affect small governments. The rule imposes no enforceable requirements on any party, including small governments. Thus, this proposed rule is not subject to the requirements of section 203 of UMRA.

E. Executive Order 13132: Federalism

Executive Order 13132, entitled ''Federalism'' (64 FR 43255, August 10, 1999), requires EPA to develop an accountable process to ensure ''meaningful and timely input by State

and local officials in the development of regulatory policies that have Federalism implications.'' ''Policies that have Federalism implications'' is defined in the Executive Order to include regulations that have ''substantial direct effects on the States, on the relationship between the national government and the States, or on the distribution of power and responsibilities among the various levels of government.''

This proposed rule does not have Federalism implications. It will not have substantial direct effects on the States, on the relationship between the national government and the States, or on the distribution of power and responsibilities among the various levels of government, as specified in Executive Order 13132. The rule will not affect the nature of the relationship between EPA and States generally, for the rule only applies to waterbodies in Oregon. Further, the rule will not substantially affect the relationship of EPA and the State of Oregon, or the distribution of power or responsibilities between EPA and the various levels of government. The proposed rule will not alter the State's authority to issue NPDES permits or the State's considerable discretion in implementing these water quality standards. Finally, this proposed rule will not preclude Oregon from adopting water quality standards that meet the requirements of the CWA. Thus, Executive Order 13132 does not apply to this proposed rule.

Although section 6 of Executive Order 13132 does not apply to this rule, EPA worked closely with the State of Oregon in developing it. In the spirit of Executive Order 13132, and consistent with EPA policy to promote communications between the EPA and State and local governments, EPA specifically solicits comments on this proposed rule from State and local officials.

F. Executive Order 13175: Consultation and Coordination With Indian Tribal Governments

Executive Order 13175, entitled ''Consultation and Coordination with Indian Tribal Governments'' (65 FR 67249, November 9, 2000), requires EPA to develop an accountable process to ensure ''meaningful and timely input by tribal officials in the development of regulatory policies that have tribal implications.'' ''Policies that have tribal implications'' is defined in the Executive Order to include regulations that have ''substantial direct effects on one or more Indian tribes, on the relationship between the Federal government and the Indian tribes, or on the distribution of power and responsibilities between the Federal government and Indian tribes.''

This proposed rule does not have tribal implications. It will not have substantial direct effects on Tribal governments, on the relationship between the Federal government and Indian tribes, or on the distribution of power and responsibilities between the Federal government and Indian tribes as specified in Executive Order 13175. Today's rule proposes water quality standards for waters in the State of Oregon. These standards do not establish any requirements that are directly applicable to any entity, including Tribes. In addition, this proposed rule expressly excludes waters in Indian country. Thus, Executive Order 13175 does not apply to this rule.

Although Executive Order 13175 does not apply to this rule, EPA sent letters to 12 potentially interested tribal governments and held a conference call to provide additional information, answer questions, and initiate a dialogue regarding any issues or concerns the Tribes may have regarding this proposed rule. EPA expects to continue this dialogue on its proposal to establish water quality standards in Oregon to ensure that EPA's final action takes Tribal government concerns into account. In the spirit of Executive Order 13175 and consistent with EPA policies to promote coordination and consultation with tribal governments, EPA specifically solicits additional comment on this proposed rule from Tribal officials.

G. Executive Order 13045: Protection of Children From Environmental Health Risks and Safety Risks

Executive Order 13045: Protection of Children from Environmental Health Risks and Safety Risks (62 FR 19885, April 23, 1997) applies to any rule that: (1) Is determined to be ''economically significant'' as defined under E.O. 12866, and (2) concerns an environmental health or safety risk that EPA has reason to believe may have a disproportionate effect on children. If the regulatory action meets both criteria, the Agency must evaluate the environmental health or safety effects of the planned rule on children, and explain why the planned regulation is preferable to other potentially effective and reasonably feasible alternatives considered by the Agency.

This proposed rule is not subject to the Executive Order because it is not economically significant as defined in E.O. 12866, and because it does not concern an environmental health or safety risk that the Agency has reason to believe may have a disproportionate effect on children.

H. Executive Order 13211: Actions That Significantly Affect Energy Supply, Distribution, or Use

This rule is not subject to Executive Order 13211, ''Actions Concerning Regulations That Significantly Affect Energy Supply, Distribution, or Use'' (66 FR 28355, May 22, 2001) because it is not a significant regulatory action under Executive Order 12866.

I. National Technology Transfer and Advancement Act

Section 12(d) of the National Technology Transfer and Advancement Act of 1995

(NTTAA) Public Law 104–113, 12(d) (15 U.S.C. 272 *note*) directs EPA to use voluntary consensus standards in its regulatory activities unless to do so would be inconsistent with applicable law or otherwise impractical. Voluntary consensus standards are technical standards (*e.g.*, materials specifications, test methods, sampling procedures, and business practices) that are developed or adopted by voluntary consensus standards bodies. The NTTAA directs EPA to provide Congress, through the Office of Management and Budget, explanations when the Agency decides not to use available and applicable voluntary consensus standards.

This rulemaking does not involve technical standards. Therefore, EPA is not considering the use of any voluntary consensus standards. EPA welcomes comments on this aspect of the rulemaking and invites the public to identify potentially applicable voluntary consensus standards and to explain why such standards should be used in this regulation.

List of Subjects in 40 CFR Part 131

Environmental protection, Indian lands, Intergovernmental relations, Reporting and recordkeeping requirements, Water pollution control.

Dated: October 1, 2003.

Marianne Lamont Horinko,

Acting Administrator.

For the reasons set forth in the preamble, EPA proposes to amend 40 CFR part 131 as follows:

PART 131—Water Quality Standards

1. The authority citation for part 131 continues to read as follows:

Authority: 33 U.S.C. 1251 *et seq.*

Subpart D—[Amended]

2. Section 131.39 is added to read as follows:

§ 131.39 Oregon.

(a) *Definitions.*

(1) *Natural condition* means water temperatures that would exist in the absence of human activities that alter water temperature.

(2) *Seven-day average of daily maximum, or 7DADM,* means the average of daily maximum temperatures over a seven-day period.

(3) *Cold water refugia* means waters, defined either spatially or temporally, that are more than 2°C/4°F colder than the daily maximum temperature at the nearest location in the main river channel.

(b) *Designated Uses for Salmonids.* The maps at *http://www.epa.gov/r10earth/federaloregonwqs.htm* identify the salmonid designated uses for: bull trout juvenile rearing and spawning, salmon and steelhead core juvenile rearing, salmon and trout juvenile rearing and migration, salmon and steelhead migration, and salmon and steelhead spawning through fry emergence in each of the indicated water bodies or segments. The salmon and steelhead spawning through fry emergence use is designated only for the time period indicated in the map legends (fall through either May 15 or June 15); all other uses apply throughout the year. [You may also view a copy of the maps at EPA Region 10's Oregon Operations Office, 811 SW. 6th Avenue, Portland, Oregon, 97204.] Where EPA designates bull trout rearing and spawning, EPA also designates salmon and steelhead core juvenile rearing. Where EPA designates salmon and steelhead core juvenile rearing, EPA also designates salmon and trout juvenile rearing and migration. Where EPA designates salmon and trout juvenile rearing and migration, EPA also designates salmon and steelhead migration.

(c) *Temperature Criteria for Salmonid Uses.* The following water quality criteria for temperature, with temperatures expressed as a 7DADM, apply in water bodies or segments designated for the following uses, except as provided in paragraph (d) of this section:

(1) Bull Trout Juvenile Rearing and Spawning: 12°C/54°F.

(2) Salmon and Steelhead Core Juvenile Rearing: 16°C/61°F.

(3) Salmon and Trout Juvenile Rearing and Migration: 18°C/64°F.

(4) Salmon and Steelhead Migration: 20°C/68°F. In addition, the river must have well-distributed cold water refugia. Well-distributed cold water refugia means cold water refugia that are sufficiently distributed so as to allow salmon and steelhead to migrate through a river segment or rear without significant adverse effects from high water temperatures.

(5) Salmon and Steelhead Spawning through Fry Emergence: 13°C/55°F.

(d) *Alternative Temperature Criteria for Salmonid Uses.* The following criteria, where applicable, apply instead of the criteria provided in paragraph (c) of this section:

(1) Natural Conditions. Where EPA identifies a water body or segment where the water temperature under natural conditions exceeds the applicable criterion set forth in paragraph (c) of this section, the natural condition so estimated shall be the applicable water quality criterion. This determination must be based on a scientifically-defensible method utilizing best available data. Where the natural temperature conditions so estimated exceed 20°C/68°F, the river must have well-distributed cold water refugia. Well-distributed cold water refugia means cold water refugia that are sufficiently distributed so as to allow salmon and steelhead to migrate through a river segment or rear without significant adverse effects from high water temperatures.

(2) Existing Cold Waters. In a water body or segment in which salmonid species that are listed as threatened or endangered under the Endangered Species Act are present, and where available data and information within the 10-year period preceeding the date of publication of the final rule in the **Federal Register** reflect the temperature in the water body and demonstrate that the warmest summer maximum 7DADM temperature is colder than the applicable numeric criterion. In these cases, the summer maximum 7DADM temperature shall be the applicable water quality criterion, unless a complete data record of 10 years is available, in which case the maximum 7DADM temperature for the year with the second highest maximum 7DADM shall be the applicable criterion.

(e) *Temperature Standards Implementation.* (1) Heat Load Limit. In water bodies that exceed the applicable temperature criteria, attainment determinations of these water quality standards for purposes of NPDES permitting and TMDL establishment shall allow for insignificant additions of heat by anthropogenic sources to water bodies or segments that exceed the applicable temperature criteria set forth in paragraphs (c) and (d) of this section, subject to the conditions in paragraph (e)(2) of this section. For the purposes of this paragraph, such additions of heat may be deemed insignificant only if all such additions cumulatively, at the point of maximum impact, cause the water temperature to exceed the applicable criterion by 0.3°C/0.5°F or less, assuming complete mixing. In addition, in water bodies that exceed the applicable temperature criterion, no single NPDES point source may cause, by itself, a temperature increase of 0.3°C/0.5°F or more above the applicable criterion assuming complete mixing with 25 percent of the river flow.

(2) Thermal Plume Impacts. In addition to otherwise applicable numeric or narrative criteria, the following conditions may not be exceeded as a result of a discharge from a NPDES point source discharge, or a combination of NPDES point sources discharges:

(i) Lethality. The maximum temperature within the thermal plume caused by a point source, or a combination of point sources, may not exceed 32°C/90°F after two seconds of plume travel from the point of discharge.

(ii) Thermal Shock. No more than five percent of the cross-sectional area of a river or creek may exceed 25°C/77°F.

(iii) Migration Blockage.

(A) If the temperature immediately upstream of a point source discharge, or a combination of point source discharges, is less than 21°C/70°F, then no more than 25 percent of the cross-sectional area of the receiving water may exceed 21°C/70°F.

(B) If the temperature immediately upstream of a point source discharge, or a combination of point source discharges, is at or above 21°C/70°F, then no more than 25 percent of the cross-sectional area of the receiving water may be more than 0.3°C/0.5°F warmer than the upstream temperature.

(iv) Spawning Impacts. In active spawning or egg incubation areas:

(A) Water temperatures may not exceed 13°C/55°F if they would not have done so in the absence of point source discharges; and

(B) Where water temperatures would have exceeded 13°C/55°F in the absence of point source discharges, water temperatures may not exceed 0.3°C/0.5°F above the temperatures they would have achieved in the absence of point source discharges.

(v) Cold Water Refugia Impacts. A thermal plume shall not increase the temperature of spatial cold water refugia by more than 0.3°C/0.5°F.

(3) Unusually Warm Weather Conditions. A water body shall not be water quality-limited for CWA section 303(d) listing purposes if the maximum 7DADM temperature for the year with the second highest maximum 7DADM

from a complete data record of 10 years is at or below the applicable criterion.

(f) *Numeric Intergravel Dissolved Oxygen (IGDO) Criterion for Salmonid Uses.* (1) In water bodies or segments where the bull trout juvenile rearing and spawning or salmon and steelhead spawning though fry emergence designated use applies in the State of Oregon, and during the applicable time periods, IGDO shall be at least 8.0 mg/L, measured as a spatial median, except as provided in paragraph (f)(2) of this section.

(2) Where barometric pressure, altitude, and air temperature preclude attainment of the intergravel dissolved oxygen criterion set forth in paragraph (f)(1) of this section, then the criterion shall be not less than 95 percent of the maximum IGDO level attainable given the barometric pressure, altitude, and air temperature.

(g) *Process for Federal Agencies Responsible for Federally-Owned or Operated Dams to Request that EPA Modify its Water Quality Standards for Oregon.* (1) A Federal agency responsible for a Federally-owned or operated dam may petition EPA to revise a water quality standard in this section. In developing and submitting the petition to EPA, the Federal agency must ensure that:

(i) The petition includes a description of the current function and purpose of the dam.

(ii) The petition is based on a demonstration that normal operation of the dam precludes attainment of the use, that reasonable alternatives are not feasible to restore the water to its original condition, and that there are no feasible and practicable changes to operation, maintenance or structure of the dam that can be implemented that would result in attainment of the water's designated use.

(iii) The Federal agency provides an opportunity for affected jurisdictions and the public to comment on a draft of the demonstration before it is submitted to EPA. The Federal agency must provide EPA with a response to the comments.

(2) In developing the demonstration under paragraph paragraph (g)(1) of this section, the Federal agency must address each of the following:

(i) The current purpose and function of the dam including information on how well the dam is performing in meeting the established purpose and function.

(ii) Any feasible, practicable alternatives to current operation and maintenance of the dam that could improve water quality, including coordination of operations between dams.

(iii) Any feasible, practicable structural modifications to the dam that could improve water quality.

(iv) Any relevant studies of the above factors.

(3) If such a petition is submitted, EPA will conduct a use attainability analysis (UAA) as defined in § 131.3(g) and determine within nine months of the Federal agency's submission whether a modification to the water quality standard is justified. EPA may extend this deadline if a large number of such petitions are submitted during the same time period.

(4) If EPA determines that the use designation should be revised, EPA will propose for public comment a rule to revise the applicable use designation and take final action within 15 months of making the determination in paragraph (g)(3) of this section.

(5) If EPA determines that the use designation should not be revised, EPA will respond to the petition, providing EPA's reasons for not proposing to revise the use designation.

(h) *Variances.* (1) The Regional Administrator, EPA Region 10, is authorized to grant variances from the water quality standards in paragraphs (b) through (d) and (f) of this section where the requirements of this paragraph (h) are met. A water quality standard variance applies only to the permittee requesting the variance, and only to the pollutant or pollutants specified in the variance; the underlying water quality standard otherwise remains in effect.

(2) A water quality standard variance shall not be granted if:

(i) Standards will be attained by all dischargers implementing effluent limitations required under sections 301(b) and 306 of the CWA and by nonpoint sources implementing cost-effective and reasonable best management practices required by the State; or

(ii) The variance would likely jeopardize the continued existence of any threatened or endangered species listed under Section 4 of the Endangered Species Act, or result in the destruction or adverse modification of such species' critical habitat.

(3) Subject to paragraph (h)(2) of this section, a water quality standards variance may be granted if the applicant demonstrates to EPA that attaining the water quality standard is not feasible because:

(i) Naturally occurring pollutant concentrations prevent the attainment of the use; or

(ii) Natural, ephemeral, intermittent or low flow conditions or water levels prevent the attainment of the use, unless these conditions may be compensated for by the discharge of sufficient volume of effluent discharges without violating State water conservation requirements to enable uses to be met; or

(iii) Human caused conditions or sources of pollution prevent the attainment of the use and cannot be remedied or would cause more environmental damage to correct than to leave in place; or

(iv) Dams, diversions or other types of hydrologic modifications preclude the attainment of the use, and it is not feasible to restore the water body to its original condition or to operate such modification in a way which would result in the attainment of the use; or

(v) Physical conditions related to the natural features of the water body, such as the lack of a proper substrate, cover, flow, depth, pools, riffles, and the like unrelated to water quality, preclude attainment of aquatic life protection uses; or

(vi) Controls more stringent than those required by sections 301(b) and 306 of the CWA would result in substantial and widespread economic and social impact.

(4) Procedures. An applicant for a water quality standards variance shall submit a request to the Regional Administrator of EPA Region 10. The application shall include all relevant information showing that the requirements for a variance have been satisfied. The burden is on the applicant to demonstrate to EPA's satisfaction that the designated use is unattainable for one of the reasons specified in paragraph (h)(3) of this section. If the Regional Administrator preliminarily determines that grounds exist for granting a variance, he shall provide public notice of the proposed variance and provide an opportunity for public comment. Any activities required as a condition of the Regional Administrator's granting of a variance shall be included as conditions of the NPDES permit for the applicant. These terms and conditions shall be incorporated into the applicant's NPDES permit through the permit reissuance process or through a modification of the permit pursuant to the applicable permit modification provisions of Oregon's NPDES program.

(5) A variance may not exceed 3 years or the term of the NPDES permit, whichever is less. A variance may be renewed if the applicant reapplies and demonstrates that the use in question is still not attainable. Renewal of the variance may be denied if the applicant

did not comply with the conditions of the original variance, or otherwise does not meet the requirements of this section.

(i) *Antidegradation Implementation Methods.* (1) What is an existing use for purposes of § 131.12(a)(1)? An existing use is a use actually attained in the waterbody on or after November 28, 1975, as defined in § 131.3(e).

(2) How is § 131.12(a)(1) implemented? Existing uses must be protected when authorizing any discharge or conducting any assessment pursuant to the Clean Water Act.

(3) What is a high quality water for purposes of § 131.12(a)(2)? High quality waters are those which have water quality that meets or is better than all applicable water quality standards, including all water quality criteria.

(4) What does not constitute a lowering of water quality for purposes of § 131.12(a)(2)? For purposes of § 131.12(a)(2), there is no lowering of water quality in connection with:

(i) a pollutant concentration increase when there is no overall increase in the total mass load of the pollutant on at least an annual basis; or

(ii) a *de minimis* change in temperature (*i.e.*, a 7DADM stream temperature increase 0.3°C/0.5°F or less across the watershed above an applicable temperature criteria.)

(5) What information must be considered before a lowering of water quality is allowed under § 131.12(1)(2)?

(i) No other reasonable alternatives exist except to lower water quality.

(ii) The action is necessary and justifiable for economic and social development benefits and outweighs the environmental costs of lowered water quality.

(iii) All water quality standards will be met and beneficial uses protected.

(6) What process must be followed in determining whether to allow a lowering of water quality?

(i) In order to demonstrate the necessity and importance of the proposed activity in a high quality water, the discharger/applicant/source must provide the State with enough information to allow for a financial impact analysis that assesses whether allowing an activity that lowers water quality has socioeconomic benefits that outweigh the environmental costs;

(ii) After the permitting authority considers whether the activity will likely cause a lowering of water quality and whether the discharger/applicant/source has demonstrated the necessary justification, the permitting authority will issue a preliminary decision/recommendation on whether to allow or deny the proposed permit or certificate; and

(iii) This decision/recommendation will be noted prior to the intergovermental coordination and public notice phases of the antidegradation review.

(7) What process should be used by the State of Oregon in identifying Outstanding Resource Waters (ORWs) for purposes of § 131.12(a)(3)?

(i) The State may designate high quality waterbodies to be classified as ORWs in order to protect the water quality parameters that affect ecological integrity of critical habitat or special water quality values that are vital to the unique character of those waterbodies.

(ii) The State of Oregon will develop a screening process and establish a list of nominated waterbodies for ORWs designation in the Biennial Water Quality Status Assessment Report (305(b) Report). The priority waterbodies for nomination include: those in State and National Parks, National Wild and Scenic Rivers, State Scenic Waterways, those in State and National Wildlife Refuges, and those in Federally designated wilderness areas.

(iii) The State will publish a list of water bodies which are proposed for designation as ORWs as appropriate at the time of each triennial water quality standards review.

(iv) When designating ORWs, the State shall establish the water quality values to be protected and provide a process for determining what activities are allowed that would not affect the outstanding resource values.

(8) What is the significance of an ORW designation?

(i) After the designation, any regulatory authority that is required to follow water quality standards in authorizing an activity shall not allow activities that may lower water quality below the level established except on a short-term basis to respond to emergencies or to otherwise protect human health and welfare.

(ii) [Reserved]

[FR Doc. 03–25525 Filed 10–9–03; 8:45 am]

BILLING CODE 6560–50–P

Federal Register

Friday,
October 10, 2003

Part III

Nuclear Regulatory Commission

10 CFR Chapter I

Electronic Maintenance and Submission of Information; Final Rule

NUCLEAR REGULATORY COMMISSION

10 CFR Chapter I

RIN 3150–AH33

Electronic Maintenance and Submission of Information

AGENCY: Nuclear Regulatory Commission.

ACTION: Final rule.

SUMMARY: The Nuclear Regulatory Commission (NRC) is amending its rules to clarify when and how licensees and other members of the public may use electronic means such as CD–ROM and e-mail to communicate with the agency. These amendments are necessary to implement the Government Paperwork Elimination Act (GPEA). At the same time that the NRC is amending its rules, it is also making available guidance on how to submit documents to the agency electronically. When this final rule becomes effective, this new guidance document, which is appended to this rule, will supersede earlier guidance on electronic submissions.

EFFECTIVE DATE: The final rule will become effective on January 1, 2004.

ADDRESSES: The final rule and any related documents are available on the NRC's interactive rulemaking Web site at *http://ruleforum.llnl.gov.* For information about the interactive rulemaking site, contact Ms. Carol Gallagher, (301) 415–5905, *CAG@nrc.gov.*

Publicly available NRC documents related to this final rule can also be viewed on public computers in the NRC Public Document Room (PDR), located at One White Flint North, 11555 Rockville Pike, Rockville, Maryland, Room O–1 F21. The PDR reproduction contractor will make copies of documents for a fee.

Publicly available documents created or received at the NRC after November 1, 1999, are also available electronically at the NRC's Electronic Reading Room at *http://www.nrc.gov/NRC/reading-rm/adams.html.* From this site, the public can gain entry into the NRC's Agencywide Documents Access and Management System (ADAMS), which provides text and image files of NRC's public documents. If you do not have access to ADAMS or have problems accessing the documents located in ADAMS, contact the NRC Public Document Room (PDR) reference staff at 1–800–397–4209, 301–415–4737, or by e-mail to *PDR@nrc.gov.*

FOR FURTHER INFORMATION CONTACT: John A. Skoczlas, (301) 415–7186, *EIE@nrc.gov*; or Brenda J. Shelton, (301) 415–7233, *INFOCOLLECTS@nrc.gov.*

SUPPLEMENTARY INFORMATION:

I. Background
II. The Final Rule
III. Comments on the Guidance Document
IV. Section-by-Section Analysis
V. Voluntary Consensus Standards
VI. Environmental Impact: Categorical Exclusion
VII. Paperwork Reduction Act Statement
VIII. Regulatory Analysis
IX. Regulatory Flexibility Certification
X. Backfit Analysis
XI. Congressional Review

I. Background

On September 6, 2002, the Nuclear Regulatory Commission (NRC) published the direct final rule, ''Electronic Maintenance and Submission of Information'' (RIN 3150–AF61), for comment (67 FR 57084). Along with the rule, the NRC also published its draft ''Guidance for Electronic Submissions to the Commission'' for comment.

This rulemaking had the simple aim of conforming the NRC's regulations to the GPEA by removing from the regulations language that states or suggests an unnecessary prohibition of electronic submission of documents to the agency. Because the NRC believed that this action would not cause controversy, the NRC initially published these amendments as a direct final rule. However, the NRC received significant adverse comments on both the direct final rule and the guidance document appended to the rule. The NRC, therefore, withdrew the direct final rule on December 4, 2002 (67 FR 72091), and treated the comments received as comments on the companion proposed rule published concurrently with the direct final rule (67 FR 57120; September 6, 2002). The comments received are addressed in this final rule and guidance.

The NRC received formal comments from 19 persons or organizations. The comments concerned both the rule and the draft guidance. However, the majority of the comments were on the guidance document. Although the NRC is not required to address the comments received on its proposed guidance, the NRC believes that it is appropriate to document the resolution of the comments on the guidance document, and to do so in this notice, because the rule and the guidance are being published simultaneously and form a cohesive package.

Title XVII of Pub. L. 105–277, the Omnibus Consolidated and Emergency Supplemental Appropriations Act of 1999, enacted October 21, 1998, contains provisions known as the Government Paperwork Elimination Act (GPEA), Sections 1701 *et seq.*, codified at 44 U.S.C. 3504, note. The GPEA requires, among other things, that by October 21, 2003, all Federal agencies provide persons with business before that agency the option of electronically maintaining, submitting, or disclosing information where ''practicable.'' By that same October 2003 date, the agencies must also accept electronic signatures. The Act's provisions seek to take advantage of advances in modern technology to lessen the paperwork burden on those who deal with the Federal government.

Well before the passage of the GPEA, the NRC had taken major steps to increase the use of electronic communication. For example, many of the agency's regulations on recordkeeping have long permitted storage in electronic format. After the GPEA became law, the NRC moved quickly to meet the Act's requirements. In June 1999, the agency began testing a system that permitted holders of operating licenses for nuclear power reactors, and the vendors that supplied them, to make electronic submissions to the agency in a secure manner. On several occasions, the NRC held public meetings with licensees, vendors, and others to describe and demonstrate its Electronic Information Exchange (EIE) capability.

As a result of this pilot program, on January 26, 2001, the NRC issued Regulatory Issue Summary (RIS) 2001–05, ''Guidance on Submitting Documents to the NRC by Electronic Information Exchange or on CD–ROM,'' which informs all Part 50 applicants and licensees that they have the option of submitting documents to the NRC over the Internet by the EIE process or on CD–ROM under procedures spelled out in the RIS. The RIS does not cover electronic submissions under regulations other than those in Part 50. However, on August 10, 2001, the agency issued a letter to certain fuel cycle facilities giving them the option of electronic submissions in many circumstances.[1] Nonetheless, these two documents do not cover other materials licensees or members of the general public.

II. The Final Rule

This rulemaking expands participation in electronic submissions by affording all licensees, vendors,

[1] The NPRC has also issued guidance on managing quality assurance records in electronic media. *See* RIS 2000–18, October 23, 2000, available at the NPC's Web site.

applicants, and members of the public the option, where practicable, of submitting documents to the NRC in an electronic format, for example on CD–ROM, by e-mail, or through a special Web-based interface such as the NRC's Electronic Information Exchange. Generally, electronic submission of documents to the NRC remains voluntary; paper documents remain an acceptable form of submission.

The GPEA requires that agencies accept electronic submissions only when it is ''practicable'' to do so, but the statute does not define the term ''practicable.'' At the very least, it is not ''practicable'' for the agency to receive electronic submissions unless they are made in a manner that enables the agency to receive, read, authenticate, distribute, process and retrieve a page at a time, and archive the submissions. The final regulations in this notice incorporate this general notion of ''practicable.'' Although the proposed rule did not contain this language, we have added it throughout the final rule in part to make clear that the agency cannot as a practical matter accept electronic communications in every format that submitters might choose.

However, beyond this, the term acquires meaning only in concrete circumstances and moreover tends to change as those circumstances change because the underlying technology changes quickly. Under these continually changing circumstances, the NRC does not want to write certain technologies into its regulations. Therefore, the technologically driven details of how to make electronic submissions to the NRC are laid out in the guidance document that is appended to this rule. The guidance document will be updated as necessary to reflect new technology and agency experience. The guidance discusses, among other topics, the formats the NRC is prepared to accept, the use of electronic signatures, and the treatment of nonpublic information. Most of the amendments made by this rule take the limited approach of letting readers of the regulations know that the option of electronic submission is available in many cases, and that readers should consult the agency's guidance on electronic submissions.

The NRC has also used the criterion of practicability to determine to what extent sensitive information could be protected in electronic submissions, whether such submissions could serve the needs of immediate notification, and whether the agency was prepared to make all of its outgoing communications electronic. In each of these cases, as will be discussed further below, the agency has concluded that electronic submissions are not yet always ''practicable'' because use of electronic submission in these other situations can entail disproportionate costs in time, labor, and other resources, and sometimes can even delay doing something that needs to be done quickly. Since one aim of the GPEA is to increase the efficiency of government, when the use of electronic media for submission decreases efficiency, the use of electronic media is, at least for the time being, not ''practicable.''

Public comments on the proposed rule have led us to make a significant change in what we consider ''practicable.'' The proposed rule would have continued to require multiple copies of paper submissions (though in reduced numbers), and would, moreover, have required the same number of copies of documents submitted on CD–ROM. However, in light of the comments, the NRC has decided to eliminate nearly all requirements for multiple copies, and most of the changes to the proposed rule implement that decision. We say ''nearly all,'' because we have retained, and made more explicit, the requirement in Part 63 that the application for a license for a first-of-a-kind high-level waste repository at Yucca Mountain, Nevada, be submitted in multiple paper copies. We have not wished to introduce new options into a unique process that has come far enough to give the probable participants reasonably settled expectations about how the application will be submitted and distributed. Moreover, given the technology that is reasonably available to all the probable participants, the application is more likely to be distributed in a timely way if the current regulations are adhered to; and, given the statutory time limit on the length of the licensing proceeding, time is of the essence.[2] However, these same arguments do not apply to possible future applications under the generic high-level waste regulations in Part 60, and so the requirements for multiple copies have been removed from that part. For a related discussion of the meaning of ''practicable,'' see the beginning of Section III of this notice.

This single copy policy represents a major change in the way the NRC does business, and, as is noted later, the agency may have to make exception to the policy when dealing with CD–ROMs that contain certain kinds of files. The GPEA requires agency compliance by October 21, 2003, where practicable. The rule and guidance are being published by that date. However, the transition to electronic communications will be gradual. The NRC has established January 1, 2004, as the effective date of the rule and guidance document. It is not practicable to implement fully the rule and guidance any sooner. The guidance document has been updated to include several new sections on organizing and segmenting files. These new sections will enhance the NRC's capability to produce paper copies. In the meantime, the delayed effective date for the rule and guidance will allow additional time for the NRC to develop its implementation plan and procedures and prepare to meet its staff's requirements for on-demand paper and CD–ROM copies. This delay will also allow both the NRC staff and submitters (particularly NRC licensees) more time to become familiar with the guidance and to modify their business processes (as appropriate) to achieve a successful transition to the electronic environment. The existing guidance documents on electronic submissions, Regulatory Issue Summary 2001–05 (which was directed toward Part 50 licensees and applicants) and the August 10, 2001, letter (which was directed toward certain fuel cycle facilities) will remain in effect during the period between the required GPEA compliance date (October 21, 2003) and the effective date of this final rule (January 1, 2004). When this final rule takes effect, the new guidance document will supersede both of the existing guidance documents on electronic submissions.

Few of the NRC's regulations on communications explicitly rule out electronic communications. Thus, it has not proven difficult to remove regulatory text that impedes electronic communications in circumstances where electronic communications would be practicable. In searching our regulations, we found only one regulation—§ 50.4(c)—that explicitly required the submission of paper. Many of our regulations require written, or written and signed, communications.

[2] For similar reasons, we have revised § 63.22 to require that the license application, any amendments to the application, and the environmental impact statement and its supplements for the Yucca Mountain facility be submitted also on optical storage media. In fact, the Department of Energy has already submitted the final environmental impact statement for Yucca Mountain on optical storage media. Moreover, this new requirement in § 63.22 is virtually entailed by the existing requirement in 10 CFR 2.1013(a)(2) that the application be docketed in electronic form, and that the Secretary of the Commission determine that the application can be properly accessed under the Commission's rules for the electronic docket in the Yucca Mountain proceeding. Indeed, if the Secretary cannot make such a determination, the agency may reject the application as unacceptable for docketing. *See* 10 CFR 2.1012(a).

These requirements need not be changed, because electronic communications certainly are ''written'' and we have in place technology for electronic signatures.

We have not had to propose amendments to our regulations on maintenance of records. A great many of these regulations already explicitly permit the use of electronic means to maintain records, and those that do not explicitly permit electronic maintenance of records do not in any way imply that electronic strategies for preservation are disallowed.

Thus, our amendments to existing regulations are confined largely to regulations that imply that electronic means of communication are prohibited. The typical regulation of this sort says that communications under a certain part of our regulations must be by mail or delivery in person. By appearing to be exhaustive, the regulation may be read to imply that electronic communication is prohibited. We have amended almost all of these or similar provisions, leaving in place only those regulations that dictate telephonic or similar communications when circumstances demand, as, for example, when a licensee must notify the agency promptly of a radiological overexposure or an accidental release of radioactive material.

These rulemaking amendments and the guidance document appended to this final rule do not address the submission of documents in hearings under the NRC regulations in 10 CFR part 2 and other parts that govern hearings. In particular, the amendments and guidance do not apply to proceedings under 10 CFR part 2 Subpart J, on the issuance of licenses for high-level waste repositories. Subpart J will continue to govern those proceedings. The use of electronic submissions in litigation in Federal courts and agencies is being widely discussed, and this rulemaking is not intended to resolve issues of when and how to use electronic submissions during hearings. Separate rules or guidance addressing procedures for electronic communications in hearings will be issued in the future for public comment. For at least the near future, parties in hearings must follow the directions that presiding officers issue on how submissions are to be made.

This final rule applies only to communications to the NRC from licensees, certificate holders, applicants, vendors who are required to submit documents to the NRC, external entities (Federal, State, and local governments) and other members of the public, but the GPEA is read to apply also to communications from Federal agencies to the public. Though the NRC is working to further this aspect of the GPEA also, it is not yet practicable for the agency to send all of its communications to licensees and other members of the public by means of electronic submissions. Moreover, the agency must take into account that not all persons who are interested in its work have access to electronic communication. Nonetheless, the NRC's EIE process is designed for both receiving and sending electronic communications. Moreover, the NRC posts a large amount of information on its external Web site, including significant agency communications, and makes information publicly available via ADAMS, the NRC's electronic recordkeeping system.

III. Comments on the Guidance Document

This analysis presents a summary of the significant comments received on the draft guidance and the resolution of those comments by the NRC. The guidance has also been revised to incorporate editorial corrections, clarifications, and updates of the information, as appropriate.

Comment 1: The majority of the commenters objected to the NRC's proposed requirement that a paper copy accompany all submissions on CD–ROM. The commenters disagreed with this requirement, indicating they have moved to an electronic environment based on NRC guidance contained in RIS 2001–05, which states that submissions made on CD–ROM do not require the submission of a paper copy. Several commenters stated that the NRC's paper copy requirement with submissions on CD–ROM was based on the NRC staff's unwillingness to use electronic versions, and the agency's unwillingness to purchase printing equipment that would enable it to make paper copies from the CD–ROM submissions.

Response: The NRC proposed that a paper copy be required with CD–ROM submittals because the NRC is required to make information accessible to both its staff and the public. On the public side, this means making the information available not only to those who have the technology to access electronic information, but also to those who do not have access to computers and the Internet. Requiring a paper copy provides the NRC with an efficient means of reproducing documents for members of the public who do not use the technology for various reasons. The paper copy is also a means of making information accessible to individuals with handicaps, as stipulated in section 508 of the Rehabilitation Act. Many of the formats currently being adopted for electronic information are images of textual information. These images do not work with the assistive technologies currently on the market. However, there are technologies available for converting text from paper to accessible formats for use by the handicapped. Thus, the NRC needs access to paper copies of many electronic submissions in order to provide information to the public.

Before establishing the requirement for submission of a paper copy with CD–ROM submittals, the NRC tested its ability to make copies from samples of CD–ROMs received from several nuclear utilities. Sample CD–ROMs were also provided to leading suppliers of printing and duplication services in the Washington, D.C., area to solicit cost estimates and to verify each supplier's ability to make paper copies from CD–ROMs submitted to the NRC. Both NRC and the local printing community have equipment that could print any file on the sample CD–ROMs. However, in some instances, the complexity of the file structures on the CD–ROMade it almost impossible to accurately reconstruct paper copies from the submissions. In those instances, the cost of creating paper copies from the CD–ROM would be prohibitive. Therefore, the NRC proposed that the individuals who create the documents (licensees, applicants, etc.) provide a single paper copy for use by the NRC for duplication purposes.

Nonetheless, after evaluating the public comments, the NRC is deleting from the guidance the requirement for a paper copy. In those instances where the NRC requires a paper copy for accessibility or other reasons, it will make every effort to produce the copy using NRC resources. The updated guidance includes several new sections on organization and segmentation of files being submitted to the NRC. The new sections will facilitate the NRC's capability to produce paper copies. However, when the agency is unable to successfully generate an accurate paper copy from the CD–ROM, the NRC may require the submitter to produce a paper copy. This will be handled on a case-by-case basis.

Comment 2: Commenters encouraged the NRC to develop the capability to handle many of the types of documents listed as ''Exceptions to Electronic Submission'' in the guidance.

Response: Many of the exceptions to electronic submission are not related to the capabilities of NRC systems to handle the electronic information. Some are driven by regulations and processes

that are not within the NRC's control. However, the NRC will continue to work to enhance the capabilities of the Electronic Information Exchange (EIE) process in the hope of accommodating some of the current exceptions to electronic transmissions. Since the draft was issued, the EIE capabilities have been enhanced to allow the submission of proprietary, privacy, and official-use-only information. For example, in the proposed guidance, fingerprint cards were listed as an exception to transmission via EIE. Under the current guidance, fingerprints can be transmitted via EIE.

Comment 3: The guidance limits the versions of software formats that may be submitted. In some cases the software versions prescribed by the NRC are not the current versions. The NRC should try to keep up with the latest versions of software.

Response: In the Federal environment, upgrades to the latest software can take time. However, the NRC agrees to take steps to ensure the timely approval of the most current versions of software for making submissions to the agency. However, based on National Archives and Records Administration (NARA) guidance documents issued subsequent to publication of the NRC's draft guidance, NRC is restricting the software format versions that are acceptable for submissions to the agency to the current and two prior versions. The guidance has been updated to incorporate this change.

Comment 4: Several commenters stated that versions of software should not be dictated and that there should be no restrictions on the use of versions of software.

Response: The NRC is required to transfer permanent records to NARA in an approved format. NARA currently does not allow submission of documents created using proprietary software. Thus, documents must be converted to an acceptable publicly available format.

Therefore, the NRC must require submitters to provide electronic information in one of the NARA-approved formats.

NARA further restricts formats by only accepting documents converted using the current version or the two previous versions of the software. The NRC is adopting the same approach for submissions to the agency.

The NRC has decided that only documents in one of the NARA-approved PDF formats (see Section 2.1 of the guidance document) or in one of the formats listed for transfer of spreadsheets that are intended for further calculations by the NRC staff are acceptable for electronic submission to the NRC.

Comment 5: Some comments stated that the use of a three-digit numeric prefix in file names is too prescriptive, complicates production of documents, and is unnecessary.

Response: The NRC has several years of experience reviewing and attempting to capture documents submitted to the agency in electronic form. NRC has learned that, in many instances, it is almost impossible to decipher the correct order in which to capture the files to duplicate the document on the transfer medium. Each document submitted to the NRC is created differently, according to the business needs of the creating entity and the level of expertise in the use of the capture software by the individual who creates the document. In many instances the file structure, use of folders, other formatting conventions used, and the relationships between files cannot be determined. Microsoft Explorer and other file management tools further complicate the situation by reordering the file structure. Thus, the file structure of the document cannot be duplicated in the NRC's systems. As a result, the NRC is unable to capture these submissions in its electronic document/records management system. These submissions are currently managed outside of NRC's electronic document management systems as individual objects, maintained on the transfer medium provided. This creates migration and transfer issues that have to be managed on an individual basis. The use of the three-digit prefix is an effort to simplify document capture, ensure correct ordering of files, and increase the accuracy and fidelity of the information captured in the NRC's electronic systems.

For these reasons, the NRC will continue to require a three-digit prefix on all files submitted electronically.

Comment 6: Most comments received included remarks about the maximum file size that can be submitted electronically to the NRC. These comments all requested that the file size limit be increased.

Response: The NRC contracted for a study to evaluate the most logical file size limit based on receipt and capture of incoming files and issues related to access, retrieval, and transfer via the Internet. This study concluded that the optimal file size limit for use by the NRC is 50MB. Therefore, the NRC is modifying its guidance to raise the file size limit for both EIE and CD–ROM submissions to 50MB per file. The NRC had previously proposed a 20MB limit.

Additionally, the NRC has discovered that small files are problematic because large numbers of small files require significant resources to capture and profile in electronic document management systems. Therefore, the NRC encourages submitters to combine files that are parts of larger documents to create 50MB files that can be more economically and efficiently managed.

Comment 7: Several comments stated that the resolution standards for images provided to the NRC are too high.

Response: The resolution standards included in the draft guidance were based on the NRC's experience with images and requirements identified by Adobe to ensure that images can be migrated. This proposed guidance was developed by the NRC before the availability of Government-wide guidance from NARA. Since the draft guidance was published, NARA has issued standards for the transfer of scanned images and PDF documents to NARA. The NRC is adopting these standards in Section 2.5 of the guidance so that the agency can comply with the NARA transfer requirements. The NARA guidance specifies higher resolution levels than proposed originally by the NRC for some image forms. The NRC's original proposed standard was 300 dots per inch (dpi) for Bi-tonal (Black and White) and 200 dpi for Color and Grayscale. The revised standard is 300 dpi for all three.

Comment 8: Several comments stated that the NRC should specify a standard format for submission of documents on CD–ROM that would allow for the upload of the documents into NRC systems.

Response: The NRC agrees. A new section has been added to the guidance (Section 2.14) to cover requirements for segmenting large documents, and another (Section 4.3) has been revised to cover requirements for the accompanying transmittal letter to facilitate the capture of CD–ROM submissions in ADAMS and other NRC systems.

IV. Section-by-Section Analysis

Well over 100 of our regulations are being amended by this final rule. However, we are making only a very few kinds of changes, and so an analysis of each and every amended section would be highly repetitious and, more important, would obscure the aims and forms of the amendments. Therefore, rather than describe each amended section, we will describe only the typical changes we are making and why we are making them.

Many of the kinds of changes are adequately represented by the proposed changes to sections of Part 30.

(1) The changes to § 30.6, ''Communications,'' are examples of the most important kind of amendment in this rule. Section 30.6 and its analogues in other parts of the NRC's regulations have typically said that communications are to be mailed or delivered by hand to the agency or one of its regional offices. The amended section makes clear that the current list of options is not exhaustive, and that electronic communications are permitted where ''practicable.'' The amendment refers readers to guidance for answers to questions about what is practicable and how electronic submissions are to be made. The NRC has developed a guidance document that provides specific information concerning electronic submissions. This guidance document appears as an appendix to this final rule. Please note that the guidance document will not be codified in the Code of Federal Regulations.

A variation on § 30.6 requires that paper submissions be on a ''page-replacement'' basis or that an envelope be marked a certain way. See, for example, § 72.70(c) and § 9.67. We have also amended these regulations to make clear that an electronic option is available on a full-replacement basis.

The amendment of § 30.6 illustrates a general principle we have followed throughout the amendments, namely, that the amended regulations should contain no less information than the previous regulations. We had considered saving time and reducing printed regulatory text by leaving existing communications regulations unchanged and simply adding to Chapter I of Title 10 of the Code of Federal Regulations a single new regulation on communications, applicable to communications under every part of the NRC's regulations. This regulation would have said that, with certain exceptions, the electronic option was available, notwithstanding what any other NRC communications regulation said. However, regulations on communications then would have contradicted each other, and readers of one of the other parts could have been misled by the part they were reading into thinking that communications had to be by mail or delivery in person. Thus, to avoid inconsistencies and to ensure that the new regulations contain as much information as the old ones, we have revised any section that, because it mentioned only one or two options for communications, implied that the electronic option was ruled out. Thus, we have amended § 30.6 in several places.

(2) The amendments to § 30.50(c), ''Reporting requirements,'' and § 30.55 (c), ''Tritium reports,'' are instances of a second major class of amendment in this final rule. The sections amended by this class typically required two or three kinds of notification to the NRC—a more or less immediate notification by phone or sometimes telefax or telegram of an incident, a pending shipment, or other time-sensitive matter; then a followup report several hours later, again by phone, telefax, or telegram; and finally, several days later, a written report to the appropriate office director. Section 30.50 requires all three kinds of reports. Generally speaking, we have not added an electronic option for the first two kinds of reports, the short-term ones, because the aims of these required reports are best served by consistently stable, rapid, and fully interactive means of communications. Electronic Information Exchange communications may not yet consistently meet these needs. E-mail delivery times, for example, can still be measured in days sometimes, and even ''instant messaging'' does not always permit the same facility of information exchange and discussion that the telephone permits. Thus, we have concluded that, at the present time, electronic communication of short-term reports is not yet ''practicable.'' We will revisit these requirements as the technology advances. Nonetheless, the amendments in this final rule add the electronic option for communicating written followup reports required by §§ 30.50 and 30.55 and their analogues.

(3) The amendment to § 30.7(e)(3) is an example of a third class of amendment that is less important than the two that have already been discussed. Several regulations require that a licensee or applicant acquire a copy of an NRC form, either for posting at the licensee's facility (as in the case of § 30.7), for filling out and sending to the NRC to apply for a license, or to meet a reporting requirement. These regulations typically say that the form may be acquired by writing to a certain address or by calling a certain number. The amendments to these sections add that the forms may be acquired by visiting the NRC's Web site.

In addition, throughout the regulations we have also eliminated requirements for multiple copies of submissions. For example, § 51.66 previously required submittal of 25 copies of the environmental report and retention of an additional 125 copies for later distribution. The submittal requirement is now being reduced to a single copy, and instead of being required to retain copies, an applicant will be required to maintain the capability to generate additional copies as directed.

This final rule text also makes a number of minor changes to reflect other final rules that the NRC has issued since the proposed rule on electronic submissions was issued. The text also contains a number of administrative changes, such as changes in phone numbers and street and e-mail addresses.

V. Voluntary Consensus Standards

The National Technology Transfer and Advancement Act of 1995 (NTTAA), Pub. L. 104–113, requires that Federal agencies use technical standards that are developed or adopted by voluntary consensus standards bodies unless using such a standard is inconsistent with applicable law or otherwise impractical. In this final rule, the NRC is not adopting any technical standard. It is simply helping to ensure, through a rulemaking, that the agency will be in timely compliance with the requirement in the Government Paperwork Elimination Act, Pub. L. 105–277, that Federal agencies allow electronic submissions of information where practicable. Thus, no showing of compliance with the NTTAA is necessary here.

VI. Environmental Impact: Categorical Exclusion

The NRC has determined that this final rule is the type of action described in categorical exclusion 10 CFR 51.22(c)(2), because this action seeks nonpolicy, procedural changes to the NRC's regulations. Moreover, because of the broad nature of this action and the number of the NRC's regulations affected, several other categorical exclusions apply to this rule, including 10 CFR 51.22(c)(1) and (3)(i)–(iii). Also, 10 CFR 51.22(c)(16) applies to the guidance being issued in connection with this rule and to the rule itself. Therefore, neither an environmental impact statement nor an environmental assessment has been prepared for these changes to the regulations. Because of its procedural nature, this action does not raise environmental justice concerns.

VII. Paperwork Reduction Act Statement

The Office of Management and Budget (OMB) has determined that, because this final rule provides the option of collecting information by use of electronic means but does not amend the existing information collections to

which the rule pertains, OMB's review and approval under the Paperwork Reduction Act of 1995 (44 U.S.C. 3501 and following) are not required.

VIII. Regulatory Analysis

A regulatory analysis has not been prepared for this rulemaking. The amendments below will neither impose new nor relax existing safety requirements and, thus, do not call for the sort of safety/cost analysis described in the agency's regulatory analysis guidelines in NUREG/BR–0058. Moreover, the NRC is required by the Government Paperwork Elimination Act, Pub. L. 105–277 (44 U.S.C. 3505, *note*), to allow electronic submissions where practicable, and the final rule does simply that. Thus, an analysis of costs and benefits could not alter a decision to implement the policy embodied in this rule. However, the NRC believes that the rule will afford all persons who deal with the agency greater flexibility in choosing the format of many of their communications and, thus, will allow them to choose less costly alternatives, often reducing the current costs of their communications with the NRC.

IX. Regulatory Flexibility Certification

In accordance with section 605(b) of the Regulatory Flexibility Act (Title 5, Chapter 6 of the U.S. Code), the Commission certifies that this rule does not have a significant economic impact on a substantial number of small entities. Therefore, in accordance with section 605(b), the NRC is not preparing a regulatory flexibility analysis. The rule will in fact apply to the many small entities that are among the NRC's licensees, but it will impose no new burdens on those small entities. To the contrary, as noted in the regulatory analysis section of this notice, the agency's expectation is that the rule will reduce burdens.

The NRC is providing the certification to the Chief Counsel for Advocacy of the SBA, in accordance with section 605 of the Regulatory Flexibility Act.

X. Backfit Analysis

The NRC has determined that a backfit analysis is not required for this final rule because these amendments do not include any provisions that would require backfits as defined in 10 CFR Chapter I. Furthermore, this rule is necessary so that the NRC can respond adequately to the mandate in the Government Paperwork Elimination Act of 1998 that Federal agencies ''provide for the option of the electronic maintenance, submission, or disclosure of information, when practicable as a substitute for paper * * *'' (Pub. L. 105–277, Sec. 1704). Therefore, a backfit analysis has not been prepared for this final rule.

XI. Congressional Review

The provisions of 5 U.S.C. 801 *et seq.*, which govern congressional review of rulemakings, do not apply to this rulemaking because it concerns agency procedure and practice and will not substantially affect the rights and obligations of nonagency parties. *See* 5 U.S.C. 804(3)(C).

List of Subjects

10 CFR Part 2

Administrative practice and procedure, Antitrust, Byproduct material, Classified information, Environmental protection, Nuclear materials, Nuclear power plants and reactors, Penalties, Sex discrimination, Source material, Special nuclear material, Waste treatment and disposal.

10 CFR Part 4

Administrative practice and procedure, Blind, Buildings, Civil rights, Employment, Equal employment opportunity, Federal aid programs, Grant programs, Handicapped, Loan programs, Reporting and recordkeeping requirements, Sex discrimination.

10 CFR Part 9

Criminal penalties, Freedom of information, Privacy, Reporting and recordkeeping requirements, Sunshine Act.

10 CFR Part 11

Hazardous materials—transportation, Investigations, Nuclear materials, Reporting and recordkeeping requirements, Security measures, Special nuclear material.

10 CFR Part 15

Administrative practice and procedure, Debt collection.

10 CFR Part 19

Criminal penalties, Environmental protection, Nuclear materials, Nuclear power plants and reactors, Occupational safety and health, Radiation protection, Reporting and recordkeeping requirements, Sex discrimination.

10 CFR Part 20

Byproduct material, Criminal penalties, Licensed material, Nuclear materials, Nuclear power plants and reactors, Occupational safety and health, Packaging and containers, Radiation protection, Reporting and recordkeeping requirements, Source material, Special nuclear material, Waste treatment and disposal.

10 CFR Part 21

Nuclear power plants and reactors, Penalties, Radiation protection, Reporting and recordkeeping requirements.

10 CFR Part 25

Classified information, Criminal penalties, Investigations, Reporting and recordkeeping requirements, Security measures.

10 CFR Part 30

Byproduct material, Criminal penalties, Government contracts, Intergovernmental relations, Isotopes, Nuclear materials, Radiation protection, Reporting and recordkeeping requirements.

10 CFR Part 31

Byproduct material, Criminal penalties, Labeling, Nuclear materials, Packaging and containers, Radiation protection, Reporting and recordkeeping requirements, Scientific equipment.

10 CFR Part 32

Byproduct material, Criminal penalties, Labeling, Nuclear materials, Radiation protection, Reporting and recordkeeping requirements.

10 CFR Part 33

Byproduct material, Criminal penalties, Nuclear materials, Radiation protection, Reporting and recordkeeping requirements.

10 CFR Part 34

Criminal penalties, Packaging and containers, Radiation protection, Radiography, Reporting and recordkeeping requirements, Scientific equipment, Security measures.

10 CFR Part 35

Byproduct material, Criminal penalties, Drugs, Health facilities, Health professions, Medical devices, Nuclear materials, Occupational safety and health, Radiation protection, Reporting and recordkeeping requirements.

10 CFR Part 39

Byproduct material, Criminal penalties, Nuclear material, Oil and gas exploration—well logging, Reporting and recordkeeping requirements, Scientific equipment, Security measures, Source material, Special nuclear material.

10 CFR Part 40

Criminal penalties, Government contracts, Hazardous materials

transportation, Nuclear materials, Reporting and recordkeeping requirements, Source material, Uranium.

10 CFR Part 50

Antitrust, Classified information, Criminal penalties, Fire protection, Intergovernmental relations, Nuclear power plants and reactors, Radiation protection, Reactor siting criteria, Reporting and recordkeeping requirements.

10 CFR Part 51

Administrative practice and procedure, Environmental impact statement, Nuclear materials, Nuclear power plants and reactors, Reporting and recordkeeping requirements.

10 CFR Part 52

Administrative practice and procedure, Antitrust, Backfitting, Combined license, Early site permit, Emergency planning, Fees, Inspection, Limited work authorization, Nuclear power plants and reactors, Probabilistic risk assessment, Prototype, Reactor siting criteria, Redress of site, Reporting and recordkeeping requirements, Standard design, Standard design certification.

10 CFR Part 55

Criminal penalties, Manpower training programs, Nuclear power plants and reactors, Reporting and recordkeeping requirements.

10 CFR Part 60

Criminal penalties, High-level waste, Nuclear materials, Nuclear power plants and reactors, Reporting and recordkeeping requirements, Waste treatment and disposal.

10 CFR Part 61

Criminal penalties, Low-level waste, Nuclear materials, Reporting and recordkeeping requirements, Waste treatment and disposal.

10 CFR Part 62

Administrative practice and procedure, Denial of access, Emergency access to low-level waste disposal, Low-level radioactive waste, Low-level radioactive waste treatment and disposal, Low-level waste policy amendments act of 1985, Nuclear materials, Reporting and recordkeeping requirements.

10 CFR Part 63

Criminal penalties, High-level waste, Nuclear power plants and reactors, Reporting and recordkeeping requirements, Waste treatment and disposal.

10 CFR Part 70

Criminal penalties, Hazardous materials transportation, Material control and accounting, Nuclear materials, Packaging and containers, Radiation protection, Reporting and recordkeeping requirements, Scientific equipment, Security measures, Special nuclear material.

10 CFR Part 71

Criminal penalties, Hazardous materials transportation, Nuclear materials, Packaging and containers, Reporting and recordkeeping requirements.

10 CFR Part 72

Administrative practice and procedure, Criminal penalties, Manpower training programs, Nuclear materials, Occupational safety and health, Penalties, Radiation protection, Reporting and recordkeeping requirements, Security measures, Spent fuel, Whistleblowing.

10 CFR Part 73

Criminal penalties, Export, Hazardous materials transportation, Import, Nuclear materials, Nuclear power plants and reactors, Reporting and recordkeeping requirements, Security measures.

10 CFR Part 74

Accounting, Criminal penalties, Hazardous materials transportation, Material control and accounting, Nuclear materials, Packaging and containers, Radiation protection, Reporting and recordkeeping requirements, Scientific equipment, Special nuclear material.

10 CFR Part 75

Criminal penalties, Intergovernmental relations, Nuclear materials, Nuclear power plants and reactors, Reporting and recordkeeping requirements, Security measures.

10 CFR Part 76

Certification, Criminal penalties, Radiation protection, Reporting and recordkeeping requirements, Security measures, Special nuclear material, Uranium enrichment by gaseous diffusion.

10 CFR Part 81

Administrative practice and procedure, Inventions and patents.

10 CFR Part 95

Classified information, Criminal penalties, Reporting and recordkeeping requirements, Security measures.

10 CFR Part 100

Nuclear power plants and reactors, Reactor siting criteria.

10 CFR Part 110

Administrative practice and procedure, Classified information, Criminal penalties, Export, Import, Intergovernmental relations, Nuclear materials, Nuclear power plants and reactors, Reporting and recordkeeping requirements, Scientific equipment.

10 CFR Part 140

Criminal penalties, Extraordinary nuclear occurrence, Insurance, Intergovernmental relations, Nuclear materials, Nuclear power plants and reactors, Reporting and recordkeeping requirements.

10 CFR Part 150

Criminal penalties, Hazardous materials transportation, Intergovernmental relations, Nuclear materials, Reporting and recordkeeping requirements, Security measures, Source material, Special nuclear material.

10 CFR Part 170

Byproduct material, Import and export licenses, Intergovernmental relations, Non-payment penalties, Nuclear materials, Nuclear power plants and reactors, Source material, Special nuclear material.

10 CFR Part 171

Annual charges, Byproduct material, Holders of certificates, registrations, approvals, Intergovernmental relations, Nonpayment penalties, Nuclear materials, Nuclear power plants and reactors, Source material, Special nuclear material.

■ For the reasons set out in the preamble and under the authority of the Atomic Energy Act of 1954, as amended; the Energy Reorganization Act of 1974, as amended; and 5 U.S.C. 552 and 553, the NRC is adopting the following amendments to 10 CFR Chapter I:

PART 2—RULES OF PRACTICE FOR DOMESTIC LICENSING PROCEEDINGS AND ISSUANCE OF ORDERS

■ 1. The authority citation for part 2 is revised to read as follows:

Authority: Secs. 161, 181, 68 Stat. 948, 953, as amended (42 U.S.C. 2201, 2231); sec. 191, as amended, Pub. L. 87–615, 76 Stat. 409 (42 U.S.C. 2241); sec. 201, 88 Stat. 1242, as amended (42 U.S.C. 5841); 5 U.S.C. 552; sec. 1704, 112 Stat. 2750 (44 U.S.C. 3504 note).

Section 2.101 also issued under secs. 53, 62, 63, 81, 103, 104, 105, 68 Stat. 930, 932, 933, 935, 936, 937, 938, as amended (42 U.S.C. 2073, 2092, 2093, 2111, 2133, 2134,

2135); sec. 114(f); Pub. L. 97–425, 96 Stat. 2213, as amended (42 U.S.C. 10143(f)); sec. 102, Pub. L. 91–190, 83 Stat. 853, as amended (42 U.S.C. 4332); sec. 301, 88 Stat. 1248 (42 U.S.C. 5871). Section 2.102, 2.103, 2.104, 2.105, 2.721 also issued under secs. 102, 103, 104, 105, 183i, 189, 68 Stat. 936, 937, 938, 954, 955, as amended (42 U.S.C. 2132, 2133, 2134, 2135, 2233, 2239). Section 2.105 also issued under Pub. L. 97–415, 96 Stat. 2073 (42 U.S.C. 2239). Sections 2.200–2.206 also issued under secs. 161 b, i, o, 182, 186, 234, 68 Stat. 948–951, 955, 83 Stat. 444, as amended (42 U.S.C. 2201 (b), (i), (o), 2236, 2282); sec. 206, 88 Stat. 1246 (42 U.S.C. 5846). Section 2.205(j) also issued under Pub. L. 101–410, 104 Stat. 90, as amended by section 3100(s), Pub. L. 104–134, 110 Stat. 1321–373 (28 U.S.C. 2461 note). Section 2.600–2.606 also issued under sec. 102, Pub. L. 91–190, 83 Stat. 853, as amended (42 U.S.C. 4332). Section 2.700a, 2.719 also issued under 5 U.S.C. 554. Sections 2.754, 2.760, 2.770, 2.780 also issued under 5 U.S.C. 557. Section 2.764 also issued under secs. 135, 141, Pub. L. 97–425, 96 Stat. 2232, 2241 (42 U.S.C. 10155, 10161). Section 2.790 also issued under sec. 103, 68 Stat. 936, as amended (42 U.S.C. 2133) and 5 U.S.C. 552. Sections 2.800 and 2.808 also issued under 5 U.S.C. 553, Section 2.809 also issued under 5 U.S.C. 553, and sec. 29, Pub. L. 85–256, 71 Stat. 579, as amended (42 U.S.C. 2039). Subpart K also issued under sec. 189, 68 Stat. 955 (42 U.S.C. 2239); sec. 134, Pub. L. 97–425, 96 Stat. 2230 (42 U.S.C. 10154). Subpart L also issued under sec. 189, 68 Stat. 955 (42 U.S.C. 2239). Subpart M also issued under sec. 184 (42 U.S.C. 2234) and sec. 189, 68 Stat. 955 (42 U.S.C. 2239). Appendix A also issued under sec. 6, Pub. L. 91–560, 84 Stat. 1473 (42 U.S.C. 2135).

■ 2. In § 2.206, the second sentence of paragraph (a) is removed and three sentences are added in its place to read as follows:

§ 2.206 Requests for action under this subpart.

(a) * * * Requests must be addressed to the Secretary of the Commission and must be filed either by hand delivery to the NRC's Offices at 11555 Rockville Pike, Rockville, Maryland; by mail or telegram addressed to the Secretary, U.S. Nuclear Regulatory Commission, Washington, DC 20555–0001; or by electronic submission, for example, via facsimile, Electronic Information Exchange, e-mail, or CD–ROM. Electronic submissions must be made in a manner that enables the NRC to receive, read, authenticate, distribute, and archive the submission, and process and retrieve it a single page at a time. Detailed guidance on making electronic submissions can be obtained by visiting the NRC's Web site at *http://www.nrc.gov/site-help/eie.html,* by calling (301) 415–6030, by e-mail to *EIE@nrc.gov;* or by writing the Office of the Chief Information Officer, U.S. Nuclear Regulatory Commission, Washington, DC 20555–0001. * * *

* * * * *

■ 3. In § 2.802, paragraph (a) and the second sentence of the introductory text of paragraph (b) are revised to read as follows:

§ 2.802 Petition for rulemaking.

(a) Any interested person may petition the Commission to issue, amend or rescind any regulation. The petition should be addressed to the Secretary, Attention: Rulemakings and Adjudications Staff, and sent either by mail addressed to the U.S. Nuclear Regulatory Commission, Washington, DC 20555–0001; by facsimile; by hand delivery to the NRC's offices at 11555 Rockville Pike, Rockville, Maryland; or, where practicable, by electronic submission, for example, via Electronic Information Exchange, e-mail, or CD–ROM. Electronic submissions must be made in a manner that enables the NRC to receive, read, authenticate, distribute, and archive the submission, and process and retrieve it a single page at a time. Detailed guidance on making electronic submissions can be obtained by visiting the NRC's Web site at *http://www.nrc.gov/site-help/eie.html,* by calling (301) 415–6030, by e-mail to *EIE@nrc.gov,* or by writing the Office of the Chief Information Officer, U.S. Nuclear Regulatory Commission, Washington, DC 20555–0001. The guidance discusses, among other topics, the formats the NRC can accept, the use of electronic signatures, and the treatment of nonpublic information.

(b) * * * A prospective petitioner also may telephone the Rules and Directives Branch on (301) 415–7163, or toll free on (800) 368–5642, or send e-mail to *NRCREP@nrc.gov.*

* * * * *

PART 4—NONDISCRIMINATION IN FEDERALLY ASSISTED PROGRAMS OR ACTIVITIES RECEIVING FEDERAL FINANCIAL ASSISTANCE FROM THE COMMISSION

■ 4. The authority citation for part 4 is revised to read as follows:

Authority: Sec. 161, 68 Stat. 948, as amended (42 U.S.C. 2201); sec. 274, 73 Stat. 688, as amended (42 U.S.C. 2021); sec. 201, 88 Stat. 1242, as amended (42 U.S.C. 5841); sec. 1704, 112 Stat. 2750 (44 U.S.C. 3504 note).

Subpart A also issued under secs. 602–605, Pub. L. 88–352, 78 Stat. 252, 253 (42 U.S.C. 2000d–1–2000d–4); sec. 401, 88 Stat. 1254 (42 U.S.C. 5891).

Subpart B also issued under sec. 504, Pub. L. 93–112, 87 Stat. 394 (29 U.S.C. 706); sec. 119, Pub. L. 95–602, 92 Stat. 2984 (29 U.S.C. 794); sec. 122, Pub. L. 95–602, 92 Stat. 2984 (29 U.S.C. 706(6)).

Subpart C also issued under Title III of Pub. L. 94–135, 89 Stat. 728, as amended (42 U.S.C. 6101).

Subpart E also issued under 29 U.S.C. 794.

■ 5. Section 4.5 is revised to read as follows:

§ 4.5 Communications and reports.

Except as otherwise indicated, communications and reports relating to this part may be sent to the NRC by mail addressed to the U.S. Nuclear Regulatory Commission, Washington, DC 20555–0001; by hand delivery to the NRC's offices at 11555 Rockville Pike, Rockville, Maryland; or, where practicable, by electronic submission, for example, via Electronic Information Exchange, or CD–ROM. Electronic submissions must be made in a manner that enables the NRC to receive, read, authenticate, distribute, and archive the submission, and process and retrieve it a single page at a time. Detailed guidance on making electronic submissions can be obtained by visiting the NRC's Web site at *http://www.nrc.gov/site-help/eie.html,* by calling (301) 415–6030, by e-mail to *EIE@nrc.gov,* or by writing the Office of the Chief Information Officer, U.S. Nuclear Regulatory Commission, Washington, DC 20555–0001. The guidance discusses, among other topics, the formats the NRC can accept, the use of electronic signatures, and the treatment of nonpublic information.

■ 6. In § 4.570, paragraph (c) is revised to read as follows:

§ 4.570 Compliance procedures.

* * * * *

(c) The Civil Rights Program Manager, Office of Small Business and Civil Rights, shall be responsible for coordinating implementation of this section. Complaints should be sent to the NRC using an appropriate method listed in § 4.5.

* * * * *

PART 9—PUBLIC RECORDS

■ 7. The authority citation for part 9 is revised to read as follows:

Authority: Sec. 161, 68 Stat. 948, as amended (42 U.S.C. 2201); sec. 201, 88 Stat. 1242, as amended (42 U.S.C. 5841); sec. 1704, 112 Stat. 2750 (44 U.S.C. 3504 note).

Subpart A also issued under 5 U.S.C. 552; 31 U.S.C. 9701; Pub. L. 99–570.

Subpart B is also issued under 5 U.S.C. 552a.

Subpart C also issued under 5 U.S.C. 552b.

■ 8. Section 9.6 is added to read as follows:

§ 9.6 Communications.

Except as otherwise indicated, communications relating to this part shall be addressed to the Freedom of Information Act and Privacy Act Officer, may be sent to the NRC by mail addressed to the U.S. Nuclear Regulatory Commission, Washington, DC 20555–0001; by hand delivery to the NRC's offices at 11555 Rockville Pike, Rockville, Maryland; or, where practicable, by electronic submission via facsimile to (301) 415–5130 or e-mail to *foia@nrc.gov.* Electronic submissions must be made in a manner that enables the NRC to receive, read, authenticate, distribute, and archive the submission, and process and retrieve it a single page at a time. Detailed guidance on making electronic submissions can be obtained by visiting the NRC's Web site at *http://www.nrc.gov/site-help/eie.html,* by calling (301) 415–6030, by e-mail to *EIE@nrc.gov,* or by writing the Office of the Chief Information Officer, U.S. Nuclear Regulatory Commission, Washington, DC 20555–0001. The guidance discusses, among other topics, the formats the NRC can accept, the use of electronic signatures, and the treatment of nonpublic information.

■ 9. In § 9.23, the first and second sentences of the introductory text of paragraph (b) are revised to read as follows:

§ 9.23 Request for records.

* * * * *

(b) A person may request agency records by submitting a request authorized by 5 U.S.C. 552(a)(3) to the Office of the Chief Information Officer, by an appropriate method listed in § 9.6. The request should be clearly marked ''Freedom of Information Act Request.'' * * *

* * * * *

■ 10. In § 9.29, the second and fifth sentences of paragraph (a) are revised to read as follows:

§ 9.29 Appeal from initial determination.

(a) * * * For agency records denied by an Office Director reporting to the Executive Director for Operations, the appeal should be addressed to the Executive Director for Operations and sent using an appropriate method listed in § 9.6. * * * The appeal should be clearly marked ''Appeal from Initial FOIA Decision.'' * * *

* * * * *

■ 11. In § 9.41, paragraph (a)(2) is revised to read as follows:

§ 9.41 Requests for waiver or reduction of fees.

(a) * * *

(2) Each request for a waiver or reduction of fees should be addressed to the Office of the Chief Information Officer, and sent using an appropriate method listed in § 9.6.

* * * * *

■ 12. In § 9.53, paragraph (a) and the first sentence of paragraph (b) are revised to read as follows:

§ 9.53 Requests; how and where presented.

(a) Requests may be made in person or in writing. Assistance regarding equests or other matters relating to the Privacy Act of 1974 may be obtained by writing to the Freedom of Information Act and Privacy Act Officer, by an appropriate method listed in § 9.6. Requests relating to records in multiple systems of records should be made to the same Officer. That Officer shall assist the requestor in identifying his request more precisely and shall be responsible for forwarding the request to the appropriate system manager.

(b) All written requests must be made to the Freedom of Information Act and Privacy Act Officer, by an appropriate method listed in § 9.6, and should be clearly marked ''Privacy Act Request,'' ''Privacy Act Disclosure Accounting Request,'' or ''Privacy Act Correction Request,'' as appropriate. * * *

* * * * *

■ 13. In § 9.54, the last sentence of paragraph (b) is revised to read as follows:

§ 9.54 Verification of identity of individuals making requests.

* * * * *

(b) *Inability to provide requisite documentation of identity.* * * * Forms for such notarized statements may be obtained on request from the Freedom of Information Act and Privacy Act Officer, and sent by an appropriate method listed in § 9.6.

* * * * *

■ 14. In § 9.65, the third and fifth sentences of paragraph (b) are revised to read as follows:

§ 9.65 Access determinations; appeals.

* * * * *

(b) * * * For agency records denied by the Assistant Inspector General for Investigations, the appeal must be in writing, addressed to the Inspector General, and sent by an appropriate method listed in § 9.6. * * * The appeal should be clearly marked ''Privacy Act Appeal—Denial of Access.'' * * *

* * * * *

■ 15. In § 9.66, the third and fourth sentences of paragraph (b) are revised to read as follows:

§ 9.66 Determinations authorizing or denying correction of records; appeals.

* * * * *

(b) * * * The appeal must be in writing, addressed to the Freedom of Information Act and Privacy Act Officer, and sent by an appropriate method listed in § 9.6, for submission to the appropriate appellate authority for a final determination. The appeal should be clearly marked ''Privacy Act Correction Appeal.'' * * *

* * * * *

■ 16. In § 9.67, the second sentence of paragraph (a) is removed and two sentences are added in its place to read as follows:

§ 9.67 Statements of disagreement.

(a) * * * ''Statements of Disagreement'' must be addressed, as appropriate, to the Inspector General or the Executive Director for Operations, and sent by an appropriate method listed in § 9.6. They should also be clearly marked ''Privacy Act Statement of Disagreement.''

* * * * *

PART 11—CRITERIA AND PROCEDURES FOR DETERMINING ELIGIBILITY FOR ACCESS TO OR CONTROL OVER SPECIAL NUCLEAR MATERIAL

■ 17. The authority citation for part 11 is revised to read as follows:

Authority: Sec. 161, 68 Stat. 948, as amended (42 U.S.C. 2201); sec. 201, 88 Stat. 1242, as amended (42 U.S.C. 5841); sec. 1704, 112 Stat. 2750 (44 U.S.C. 3504 note).

Section 11.15(e) also issued under sec. 501, 85 Stat. 290 (31 U.S.C. 483a).

■ 18. In § 11.15, the first sentence of paragraph (a)(1) is removed and four sentences are added in its place to read as follows:

§ 11.15 Application for special nuclear material access authorization.

(a)(1) Application for special nuclear material access authorization, renewal, or change in level must be filed by the licensee on behalf of the applicant with the Director, Division of Facilities and Security, Mail Stop T7–D57, either by mail addressed to the U.S. Nuclear Regulatory Commission, Washington, DC 20555–0001; by hand delivery to the NRC's offices at 11555 Rockville Pike, Rockville, Maryland; or, where practicable, by electronic submission, for example, via Electronic Information Exchange, or CD–ROM. Electronic submissions must be made in a manner that enables the NRC to receive, read, authenticate, distribute, and archive the submission, and process and retrieve it a single page at a time. Detailed

guidance on making electronic submissions can be obtained by visiting the NRC's Web site at *http://www.nrc.gov/site-help/eie.html,* by calling (301) 415–6030, by e-mail to *EIE@nrc.gov,* or by writing the Office of the Chief Information Officer, U.S. Nuclear Regulatory Commission, Washington, DC 20555–0001. The guidance discusses, among other topics, the formats the NRC can accept, the use of electronic signatures, and the treatment of nonpublic information.
* * *

* * * * *

PART 15—DEBT COLLECTION PROCEDURES

■ 19. The authority citation for part 15 is revised to read as follows:

Authority: Secs. 161, 186, 68 Stat. 948, 955, as amended (42 U.S.C. 2201, 2236); sec. 201, 88 Stat. 1242, as amended (42 U.S.C. 5841); sec. 1, Pub. L. 97–258, 96 Stat. 972 (31 U.S.C. 3713); sec. 5, Pub. L. 89–508, 80 Stat. 308, as amended (31 U.S.C. 3716); Pub. L. 97–365, 96 Stat. 1749 (31 U.S.C. 3719); Federal Claims Collection Standards, 31 CFR Chapter IX, parts 900–904; 31 U.S.C. Secs. 3701, 3716; 31 CFR Sec 285; 26 U.S.C. Sec 6402(d); 31 U.S.C. Sec. 3720A; 26 U.S.C. Sec. 6402(c); 42 U.S.C. Sec. 664; Pub. L. 104–134, as amended (31 U.S.C. 3713); 5 U.S.C. 5514; Executive Order 12146 (3 CFR 1980 Comp. pp. 409–412); Executive Order 12988 (3 CFR, 1996 Comp., pp. 157–163); sec. 1704, 112 Stat. 2750 (44 U.S.C. 3504 note).

■ 20. Section 15.3 is revised to read as follows:

§ 15.3 Communications.

Unless otherwise specified, communications concerning the regulations in this part may be addressed to the Secretary of the Nuclear Regulatory Commission and sent either by mail to the U.S. Nuclear Regulatory Commission, Washington, DC 20555–0001, ATTN: Rulemakings and Adjudications Staff; by hand delivery to the NRC's offices at 11555 Rockville Pike, One White Flint North, Rockville, Maryland; or, where practicable, by electronic submission, for example, via Electronic Information Exchange, or CD–ROM. Electronic submissions must be made in a manner that enables the NRC to receive, read, authenticate, distribute, and archive the submission, and process and retrieve it a single page at a time. Detailed guidance on making electronic submissions can be obtained by visiting the NRC's Web site at *http://www.nrc.gov/site-help/eie.html,* by calling (301) 415–6030, by e-mail to *EIE@nrc.gov,* or by writing the Office of the Chief Information Officer, U.S. Nuclear Regulatory Commission, Washington, DC 20555–0001. The guidance discusses, among other topics, the formats the NRC can accept, the use of electronic signatures, and the treatment of nonpublic information.

PART 19—NOTICES, INSTRUCTIONS AND REPORTS TO WORKERS: INSPECTION AND INVESTIGATIONS

■ 21. The authority citation for part 19 is revised to read as follows:

Authority: Secs. 53, 63, 81, 103, 104, 161, 186, 68 Stat. 930, 933, 935, 936, 937, 948, 955, as amended, sec. 234, 83 Stat. 444, as amended, sec. 1701, 106 Stat. 2951, 2952, 2953 (42 U.S.C. 2073, 2093, 2111, 2133, 2134, 2201, 2236, 2282, 2297f); sec. 201, 88 Stat. 1242, as amended (42 U.S.C. 5841); Pub. L. 95–601, sec. 10, 92 Stat. 2951 (42 U.S.C. 5851); sec. 1704, 112 Stat. 2750 (44 U.S.C. 3504 note).

■ 22. In § 19.11, paragraph (c)(2) is revised to read as follows:

§ 19.11 Posting of notices to workers.

* * * * *

(c) * * *

(2) Additional copies of NRC Form 3 may be obtained by writing to the Regional Administrator of the appropriate U.S. Nuclear Regulatory Commission Regional Office listed in appendix D to part 20 of this chapter, by calling (301) 415–5877, via e-mail to *forms@nrc.gov,* or by visiting the NRC's Web site at *http://www.nrc.gov* and selecting forms from the index found on the home page.

* * * * *

■ 23. In § 19.17, the second sentence of paragraph (a) is removed and five sentences are added in its place to read as follows:

§ 19.17 Inspections not warranted; informal review.

(a) * * * The complainant may obtain review of this determination by submitting a written statement of position to the Executive Director for Operations, either by mail to the U.S. Nuclear Regulatory Commission, Washington, DC 20555–0001; by hand delivery to the NRC's offices at 11555 Rockville Pike, Rockville, Maryland; or, where practicable, by electronic submission, for example, via Electronic Information Exchange, or CD–ROM. Electronic submissions must be made in a manner that enables the NRC to receive, read, authenticate, distribute, and archive the submission, and process and retrieve it a single page at a time. Detailed guidance on making electronic submissions can be obtained by visiting the NRC's Web site at *http://www.nrc.gov/site-help/eie.html,* by calling (301) 415–6030, by e-mail to *EIE@nrc.gov,* or by writing the Office of the Chief Information Officer, U.S. Nuclear Regulatory Commission, Washington, DC 20555–0001. The guidance discusses, among other topics, the formats the NRC can accept, the use of electronic signatures, and the treatment of nonpublic information. The Executive Director for Operations will provide the licensee with a copy of such statement by certified mail, excluding, at the request of the complainant, the name of the complainant. * * *

* * * * *

PART 20—STANDARDS FOR PROTECTION AGAINST RADIATION

■ 24. The authority citation for part 20 is revised to read as follows:

Authority: Secs. 53, 63, 65, 81, 103, 104, 161, 182, 186, 68 Stat. 930, 933, 935, 936, 937, 948, 953, 955, as amended, sec. 1701, 106 Stat. 2951, 2952, 2953 (42 U.S.C. 2073, 2093, 2095, 2111, 2133, 2134, 2201, 2232, 2236, 2297f), secs. 201, as amended, 202, 206, 88 Stat. 1242, as amended, 1244, 1246 (42 U.S.C. 5841, 5842, 5846); sec. 1704, 112 Stat. 2750 (44 U.S.C. 3504 note).

■ 25. Section 20.1007 is revised to read as follows:

§ 20.1007 Communications.

Unless otherwise specified, communications or reports concerning the regulations in this part should be addressed to the Executive Director for Operations (EDO), and sent either by mail to the U.S. Nuclear Regulatory Commission, Washington, DC 20555–0001; by hand delivery to the NRC's offices at 11555 Rockville Pike, Rockville, Maryland; or, where practicable, by electronic submission, for example, via Electronic Information Exchange, or CD–ROM. Electronic submissions must be made in a manner that enables the NRC to receive, read, authenticate, distribute, and archive the submission, and process and retrieve it a single page at a time. Detailed guidance on making electronic submissions can be obtained by visiting the NRC's Web site at *http://www.nrc.gov/site-help/eie.html,* by calling (301) 415–6030, by e-mail to *EIE@nrc.gov,* or by writing the Office of the Chief Information Officer, U.S. Nuclear Regulatory Commission, Washington, DC 20555–0001. The guidance discusses, among other topics, the formats the NRC can accept, the use of electronic signatures, and the treatment of nonpublic information.

■ 26. In § 20.2203, paragraph (d) is revised to read as follows:

§ 20.2203 Reports of exposures, radiation levels, and concentrations of radioactive material exceeding the constraints or limits.

* * * * *

(d) All licensees, other than those holding an operating license for a nuclear power plant, who make reports under paragraph (a) of this section shall submit the report in writing either by mail addressed to the U.S. Nuclear Regulatory Commission, ATTN: Document Control Desk, Washington, DC 20555–0001; by hand delivery to the NRC's offices at 11555 Rockville Pike, Rockville, Maryland; or, where practicable, by electronic submission, for example, Electronic Information Exchange, or CD–ROM. Electronic submissions must be made in a manner that enables the NRC to receive, read, authenticate, distribute, and archive the submission, and process and retrieve it a single page at a time. Detailed guidance on making electronic submissions can be obtained by visiting the NRC's Web site at *http://www.nrc.gov/site-help/eie.html,* by calling (301) 415–6030, by e-mail to *EIE@nrc.gov,* or by writing the Office of the Chief Information Officer, U.S. Nuclear Regulatory Commission, Washington, DC 20555–0001. A copy should be sent to the appropriate NRC Regional Office listed in appendix D to this part.

■ 27. In § 20.2206, paragraph (c) is revised to read as follows:

§ 20.2206 Reports of individual monitoring.

* * * * *

(c) The licensee shall file the report required by § 20.2206(b), covering the preceding year, on or before April 30 of each year. The licensee shall submit the report to the REIRS Project Manager by an appropriate method listed in § 20.1007 or via the REIRS Web site at *http://www.reirs.com.*

■ 28. Appendix D to part 20 is revised to read as follows:

APPENDIX D TO PART 20—UNITED STATES NUCLEAR REGULATORY COMMISSION REGIONAL OFFICES

	Address	Telephone (24 hour)	E-Mail
NRC Headquarters Operations Center	USNRC, Division of Incident Response Operations, Washington, DC 20555–0001.	(301) 816–5100 (301) 951–0550 (301) 816–5151 (fax)	*H001@nrc.gov*
Region I: Connecticut, Delaware, District of Columbia, Maine, Maryland, Massachusetts, New Hampshire, New Jersey, New York, Pennsylvania, Rhode Island, and Vermont.	USNRC, Region I, 475 Allendale Road, King of Prussia, PA 19406–1415.	(610) 337–5000 (800) 432–1156 TDD: (301) 415-5575	*RidsRgn1MailCenter@nrc.gov*
Region II: Alabama, Florida, Georgia, Kentucky, Mississippi, North Carolina, Puerto Rico, South Carolina, Tennessee, Virginia, Virgin Islands, and West Virginia.	USNRC, Region II, Sam Nunn Atlanta Federal Center, Suite 23T85, 61 Forsyth Street, SW, Atlanta, GA 30303–8931.	(404) 562–4400 (800) 877–8510 TDD: (301) 415–5575	*RidsRgn2MailCenter@nrc.gov*
Region III: Illinois, Indiana, Iowa, Michigan, Minnesota, Missouri, Ohio and Wisconsin.	USNRC, Region III, 801 Warrenville Road, Lisle, IL 60532–4351.	(630) 829–9500 (800) 522–3025 TDD: (301) 415–5575	*RidsRgn3MailCenter@nrc.gov*
Region IV: Alaska, Arizona, Arkansas, California, Colorado, Hawaii, Idaho, Kansas, Louisiana, Montana, Nebraska, Nevada, New Mexico, North Dakota, Oklahoma, Oregon, South Dakota, Texas, Utah, Washington, Wyoming, and the U.S. territories and possessions in the Pacific.	USNRC, Region IV, 611 Ryan Plaza Drive, Suite 400, Arlington, TX 76011–4005.	(817) 860–8100 (800) 952–9677 TDD: (301) 415–5575	*RidsRgn4MailCenter@nrc.gov*

■ 29. In appendix G to part 20, the third undesignated paragraph under I.(c) is revised to read as follows:

APPENDIX G TO PART 20—REQUIREMENTS FOR TRANSFERS OF LOW-LEVEL RADIOACTIVE WASTE INTENDED FOR DISPOSAL AT LICENSED LAND DISPOSAL FACILITIES AND MANIFESTS

I. MANIFEST

* * * * *

(c) * * *

NRC Forms 540, 540A, 541, 541A, 542 and 542A, and the accompanying instructions, in hard copy, may be obtained by writing or calling the Office of the Chief Information Officer, U.S. Nuclear Regulatory Commission, Washington, DC 20555–0001, telephone (301) 415–5877, or by visiting the NRC's Web site at *http://www.nrc.gov* and selecting forms from the index found on the home page.

* * * * *

PART 21—REPORTING OF DEFECTS AND NONCOMPLIANCE

■ 30. The authority citation for part 21 is revised to read as follows:

Authority: Sec. 161, 68 Stat. 948, as amended, sec. 234, 83 Stat. 444, as amended, sec. 1701, 106 Stat. 2951, 2953 (42 U.S.C. 2201, 2282, 2297f); secs. 201, as amended, 206, 88 Stat. 1242, as amended, 1246 (42 U.S.C. 5841, 5846); sec. 1704, 112 Stat. 2750 (44 U.S.C. 3504 note).

Section 21.2 also issued under secs. 135, 141, Pub. L. 97–425, 96 Stat. 2232, 2241 (42 U.S.C. 10155, 10161).

■ 31. Section 21.5 is revised to read as follows:

§ 21.5 Communications.

Except where otherwise specified in this part, written communications and reports concerning the regulations in this part must be addressed to the NRC's Document Control Desk, and sent either by mail to the U.S. Nuclear Regulatory Commission, Washington, DC 20555–0001; by hand delivery to the NRC's offices at 11555 Rockville Pike, Rockville, Maryland; or, where practicable, by electronic submission, for example, Electronic Information Exchange, or CD–ROM. Electronic submissions must be made in a manner that enables the NRC to receive, read, authenticate, distribute, and archive the submission, and process and retrieve it a single page at a time. Detailed guidance on making electronic submissions can be obtained by visiting the NRC's Web site at *http://*

www.nrc.gov/site-help/eie.html, by calling (301) 415–6030, by e-mail to *EIE@nrc.gov*, or by writing the Office of the Chief Information Officer, U.S. Nuclear Regulatory Commission, Washington, DC 20555–0001. The guidance discusses, among other topics, the formats the NRC can accept, the use of electronic signatures, and the treatment of nonpublic information. In the case of a licensee, a copy of the communication must also be sent to the appropriate Regional Administrator at the address specified in appendix D to part 20 of this chapter.

PART 25—ACCESS AUTHORIZATION FOR LICENSEE PERSONNEL

■ 32. The authority citation for part 25 is revised to read as follows:

Authority: Secs. 145, 161, 68 Stat. 942, 948, as amended (42 U.S.C. 2165, 2201); sec. 201, 88 Stat. 1242, as amended (42 U.S.C. 5841); sec. 1704, 112 Stat. 2750 (44 U.S.C. 3504 note); E.O. 10865, as amended, 3 CFR 1959—1963 Comp., p. 398 (50 U.S.C. 401, note); E.O. 12829, 3 CFR, 1993 Comp., p. 570; E.O. 12958, 3 CFR, 1995 Comp., p. 333; E.O. 12968, 3 CFR, 1995 Comp., p. 396.

Appendix A also issued under 96 Stat. 1051 (31 U.S.C. 9701).

■ 33. Section 25.9 is revised to read as follows:

§ 25.9 Communications.

Except where otherwise specified, communications and reports concerning the regulations in this part should be addressed to the Director, Division of Facilities and Security, Mail Stop T7–D57, and sent either by mail to the U.S. Nuclear Regulatory Commission, Washington, DC 20555–0001; by hand delivery to the NRC's offices at 11555 Rockville Pike, Rockville, Maryland; or, where practicable, by electronic submission, for example, Electronic Information Exchange, or CD–ROM. Electronic submissions must be made in a manner that enables the NRC to receive, read, authenticate, distribute, and archive the submission, and process and retrieve it a single page at a time. Detailed guidance on making electronic submissions can be obtained by visiting the NRC's Web site at *http://www.nrc.gov/site-help/eie.html*, by calling (301) 415–6030, by e-mail to *EIE@nrc.gov*, or by writing the Office of the Chief Information Officer, U.S. Nuclear Regulatory Commission, Washington, DC 20555–0001. The guidance discusses, among other topics, the formats the NRC can accept, the use of electronic signatures, and the treatment of nonpublic information.

PART 30—RULES OF GENERAL APPLICABILITY TO DOMESTIC LICENSING OF BYPRODUCT MATERIAL

■ 34. The authority citation for part 30 is revised to read as follows:

Authority: Secs. 81, 82, 161, 182, 183, 186, 68 Stat. 935, 948, 953, 954, 955, as amended, sec. 234, 83 Stat. 444, as amended (42 U.S.C. 2111, 2112, 2201, 2232, 2233, 2236, 2282); secs. 201 as amended, 202, 206, 88 Stat. 1242, as amended, 1244, 1246 (42 U.S.C. 5841, 5842, 5846); sec. 1704, 112 Stat. 2750 (44 U.S.C. 3504 note).

Section 30.7 also issued under Pub. L. 95–601, sec. 10, 92 Stat. 2951 as amended by Pub. L. 102–486, sec. 2902, 106 Stat. 3123 (42 U.S.C. 5851). Section 30.34(b) also issued under sec. 184, 68 Stat. 954, as amended (42 U.S.C. 2234). Section 30.61 also issued under sec. 187, 68 Stat. 955 (42 U.S.C. 2237).

■ 35. In § 30.6, paragraph (a)(3) is added, and paragraphs (a)(1) and (a)(2), the introductory text of paragraph (b), and the last sentences of paragraphs (b)(2)(i), (b)(2)(ii), (b)(2)(iii), and (b)(2)(iv) are revised, to read as follows:

§ 30.6 Communications.

(a) * * *

(1) By mail addressed: ATTN: Document Control Desk, Director, Office of Nuclear Material Safety and Safeguards, U.S. Nuclear Regulatory Commission, Washington, DC 20555–0001.

(2) By hand delivery to the NRC's offices at 11555 Rockville Pike, Rockville, Maryland.

(3) Where practicable, by electronic submission, for example, via Electronic Information Exchange, or CD–ROM. Electronic submissions must be made in a manner that enables the NRC to receive, read, authenticate, distribute, and archive the submission, and process and retrieve it a single page at a time. Detailed guidance on making electronic submissions can be obtained by visiting the NRC's Web site at *http://www.nrc.gov/site-help/eie.html*, by calling (301) 415–6030, by e-mail to *EIE@nrc.gov*, or by writing the Office of the Chief Information Officer, U.S. Nuclear Regulatory Commission, Washington, DC 20555–0001. The guidance discusses, among other topics, the formats the NRC can accept, the use of electronic signatures, and the treatment of nonpublic information.

(b) The Commission has delegated to the four Regional Administrators licensing authority for selected parts of its decentralized licensing program for nuclear materials as described in paragraph (b)(1) of this section. Any communication, report, or application covered under this licensing program must be submitted to the appropriate Regional Administrator. The Administrators' jurisdictions and mailing addresses are listed in paragraph (b)(2) of this section.

* * * * *

(2) * * *

(i) * * * All mailed or hand-delivered inquiries, communications, and applications for a new license or an amendment, renewal, or termination request of an existing license specified in paragraph (b)(1) of this section must use the following address: U.S. Nuclear Regulatory Commission, Region I, Nuclear Material Section B, 475 Allendale Road, King of Prussia, Pennsylvania 19406–1415; where e-mail is appropriate it should be addressed to *RidsRgn1MailCenter@nrc.gov*.

(ii) * * * All mailed or hand-delivered inquiries, communications, and applications for a new license or an amendment, renewal, or termination request of an existing license specified in paragraph (b)(1) of this section must use the following address: U.S. Nuclear Regulatory Commission, Region II, Material Licensing/Inspection Branch, Sam Nunn Atlanta Federal Center, Suite 23T85, 61 Forsyth Street, SW, Atlanta, GA 30303–8931; where e-mail is appropriate it should be addressed to *RidsRgn2MailCenter@nrc.gov*.

(iii) * * * All mailed or hand-delivered inquiries, communications, and applications for a new license or an amendment, renewal, or termination request of an existing license specified in paragraph (b)(1) of this section must use the following address: U.S. Nuclear Regulatory Commission, Region III, Material Licensing Section, 801 Warrenville Road, Lisle, Illinois 60532–4351; where e-mail is appropriate it should be addressed to *RidsRgn3MailCenter@nrc.gov.*

(iv) * * * All mailed or hand-delivered inquiries, communications, and applications for a new license or an amendment, renewal, or termination request of an existing license specified in paragraph (b)(1) of this section must use the following address: U.S. Nuclear Regulatory Commission, Region IV, Material Radiation Protection Section, 611 Ryan Plaza Drive, Suite 400, Arlington, Texas 76011–4005; where e-mail is appropriate it should be addressed to *RidsRgn4MailCenter@nrc.gov.*

■ 36. In § 30.7, paragraph (e)(3) is revised to read as follows:

§ 30.7 Employee protection.

* * * * *

(e) * * *

(3) Copies of NRC Form 3 may be obtained by writing to the Regional

Administrator of the appropriate U.S. Nuclear Regulatory Commission Regional Office listed in appendix D to part 20 of this chapter, by calling (301) 415–5877, via e-mail to *forms@nrc.gov*, or by visiting the NRC's Web site at *http://www.nrc.gov* and selecting forms from the index found on the home page.

* * * * *

■ 37. In § 30.32, the first sentence of paragraph (a) is revised to read as follows:

§ 30.32 Application for specific licenses.

(a) A person may file an application on NRC Form 313, ''Application for Material License,'' in accordance with the instructions in § 30.6 of this chapter. * * *

* * * * *

■ 38. In § 30.50, the third sentence of the introductory text of paragraph (c)(2) is revised to read as follows:

§ 30.50 Reporting requirements.

* * * * *

(c) * * *

(2) * * * These written reports must be sent to the NRC using an appropriate method listed in § 30.6(a); and a copy must be sent to the appropriate NRC Regional office listed in appendix D to part 20 of this chapter. * * *

* * * * *

■ 39. In § 30.55, the third sentence of paragraph (c) is revised to read as follows:

§ 30.55 Tritium reports.

* * * * *

(c) * * * Copies of such written report shall be sent to the Director of the NRC's Office of Nuclear Material Safety and Safeguards, using an appropriate method listed in § 30.6(a). * * *

* * * * *

PART 31—GENERAL DOMESTIC LICENSES FOR BYPRODUCT MATERIAL

■ 40. The authority citation for part 31 is revised to read as follows:

Authority: Secs. 81, 161, 183, 68 Stat. 935, 948, 954, as amended (42 U.S.C. 2111, 2201, 2233); secs. 201, as amended, 202, 88 Stat. 1242, as amended,1244 (42 U.S.C. 5841, 5842); sec. 1704, 112 Stat. 2750 (44 U.S.C. 3504 note).

■ 41. In § 31.5, the introductory text of paragraph (c)(8)(ii), the third sentence of the introductory text of paragraph (c)(9)(i), and the second sentence of paragraph (c)(11) are revised to read as follows:

§ 31.5 Certain detecting, measuring, gauging, or controlling devices and certain devices for producing light or an ionized atmosphere.

* * * * *

(c) * * *

(8) * * *

(ii) Shall, within 30 days after the transfer of a device to a specific licensee or export, furnish a report to the Director of Nuclear Material Safety and Safeguards, ATTN: Document Control Desk/GLTS, using an appropriate method listed in § 30.6(a) of this chapter. The report must contain—

* * * * *

(9) * * *

(i) * * * Within 30 days of the transfer, the transferor shall report to the Director of Nuclear Material Safety and Safeguards, ATTN: Document Control Desk/GLTS, using an appropriate method listed in § 30.6(a) of this chapter—

* * * * *

(11) * * * If the general licensee cannot provide the requested information within the allotted time, it shall, within that same time period, request a longer period to supply the information by providing the Director of the Office of Nuclear Material Safety and Safeguards, by an appropriate method listed in § 30.6(a) of this chapter, a written justification for the request.

* * * * *

■ 42. In § 31.11, paragraph (b)(1) is revised to read as follows:

§ 31.11 General license for use of byproduct material for certain in vitro clinical or laboratory testing.

* * * * *

(b) * * *

(1) Has filed NRC Form 483, ''Registration Certificate—In Vitro Testing with Byproduct Material Under General License,'' with the Director of Nuclear Material Safety and Safeguards, by an appropriate method listed in § 30.6(a), and has received from the Commission a validated copy of NRC Form 483 with a registration number assigned; or

* * * * *

PART 32—SPECIFIC DOMESTIC LICENSES TO MANUFACTURE OR TRANSFER CERTAIN ITEMS CONTAINING BYPRODUCT MATERIAL

■ 43. The authority citation for part 31 is revised to read as follows:

Authority: Secs. 81, 161, 182, 183, 68 Stat. 935, 948, 953, 954, as amended (42 U.S.C. 2111, 2201, 2232, 2233); sec. 201, 88 Stat. 1242, as amended (42 U.S.C. 5841); sec. 1704, 112 Stat. 2750 (44 U.S.C. 3504 note).

■ 44. In § 32.12, paragraph (a) is revised to read as follows:

§ 32.12 Same: Records and material transfer reports.

(a) Each person licensed under § 32.11 shall maintain records of transfer of material and file a report with the Director of Nuclear Material Safety and Safeguards by an appropriate method listed in § 30.6(a) of this chapter. A copy of the report must be sent to the appropriate NRC Regional Office listed in appendix D to part 20 of this chapter.

* * * * *

■ 45. In § 32.16, paragraph (a) is revised to read as follows:

§ 32.16 Certain items containing byproduct material: Records and reports of transfer.

(a) Each person licensed under § 32.14 or § 32.17 shall maintain records of all transfers of nuclear material and file a report with the Director of Nuclear Material Safety and Safeguards by an appropriate method listed in § 30.6(a) of this chapter, with a copy to the appropriate NRC Regional Office listed in appendix D to part 20 of this chapter.

* * * * *

■ 46. In § 32.20, paragraph (b) is revised to read as follows:

§ 32.20 Same: Records and material transfer reports.

* * * * *

(b) The licensee shall file a summary report stating the total quantity of each isotope transferred under the specific license with the Director of Nuclear Material Safety and Safeguards by an appropriate method listed in § 30.6(a) of this chapter, with a copy to the appropriate NRC Regional Office listed in appendix D to part 20 of this chapter.

* * * * *

■ 47. In § 32.25, the introductory text of paragraph (c) is revised to read as follows:

§ 32.25 Conditions of licenses issued under § 32.22: Quality control, labeling, and reports of transfer.

* * * * *

(c) Maintain records and file reports with the Director of Nuclear Material Safety and Safeguards, by an appropriate method listed in § 30.6(a), with copies to the appropriate NRC Regional Office listed in appendix D to part 20 of this chapter.

* * * * *

■ 48. In § 32.52, the first sentence of the introductory text of paragraph (a) is revised to read as follows:

§ 32.52 Same: Material transfer reports and records.

* * * * *

(a) The person shall report to the Director of Nuclear Material Safety and Safeguards, ATTN: GLTS, by an appropriate method listed in § 30.6(a), all transfers of such devices to persons for use under the general license in § 31.5 of this chapter and all receipts of devices from persons licensed under § 31.5 of this chapter. * * *

* * * * *

■ 49. The first sentence of § 32.56 is revised to read as follows:

§ 32.56 Same: Material transfer reports.

Each person licensed under § 32.53 shall file an annual report with the Director of Nuclear Material Safety and Safeguards, by an appropriate method listed in § 30.6(a) of this chapter, which report must state the total quantity of tritium or promethium-147 transferred to persons generally licensed under § 31.7 of this chapter. * * *

■ 50. In § 32.210, paragraph (b) is revised to read as follows:

§ 32.210 Registration of product information.

* * * * *

(b) The request for review must be sent to the NRC's Office of Nuclear Material Safety and Safeguards, Materials Safety and Inspection Branch, by an appropriate method listed in § 30.6(a) of this chapter.

* * * * *

PART 33—SPECIFIC DOMESTIC LICENSES OF BROAD SCOPE FOR BYPRODUCT MATERIAL

■ 51. The authority citation for part 33 is revised to read as follows:

Authority: Secs. 81, 161, 182, 183, 68 Stat. 935, 948, 953, 954, as amended (42 U.S.C. 2111, 2201, 2232, 2233); sec. 201, 88 Stat. 1242, as amended (42 U.S.C. 5841); sec. 1704, 112 Stat. 2750 (44 U.S.C. 3504 note).

■ 52. Section 33.12 is revised to read as follows:

§ 33.12 Applications for specific licenses of broad scope.

A person may file an application for specific license of broad scope on NRC Form 313, ''Application for Material License,'' in accordance with the provisions of § 30.32 of this chapter.

PART 34—LICENSES FOR INDUSTRIAL RADIOGRAPHY AND RADIATION SAFETY REQUIREMENTS FOR INDUSTRIAL RADIOGRAPHIC OPERATIONS

■ 53. The authority citation for part 34 is revised to read as follows:

Authority: Secs. 81, 161, 182, 183, 68 Stat. 935, 948, 953, 954, as amended (42 U.S.C. 2111, 2201, 2232, 2233); sec. 201, 88 Stat. 1242, as amended (42 U.S.C. 5841). Section 34.45 also issued under sec. 206, 88 Stat. 1246 (42 U.S.C. 5846); sec. 1704, 112 Stat. 2750 (44 U.S.C. 3504 note).

■ 54. Section 34.11 is revised to read as follows:

§ 34.11 Application for a specific license.

A person may file an application for specific license for use of sealed sources in industrial radiography on NRC Form 313, ''Application for Material License,'' in accordance with the provisions of § 30.32 of this chapter.

■ 55. In § 34.27, the third sentence of paragraph (d) is revised to read as follows:

§ 34.27 Leak testing and replacement of sealed sources.

* * * * *

(d) * * * A report must be filed with the Director of Nuclear Material Safety and Safeguards, by an appropriate method listed in § 30.6(a) of this chapter, the report to be filed within 5 days of any test with results that exceed the threshold in this paragraph (d), and to describe the equipment involved, the test results, and the corrective action taken. * * *

* * * * *

■ 56. In § 34.43, the second sentence of paragraph (a)(1) is revised to read as follows:

§ 34.43 Training.

(a) * * *

(1) * * * (An independent organization that would like to be recognized as a certifying entity shall submit its request to the Director, Office of Nuclear Material Safety and Safeguards, by an appropriate method listed in § 30.6(a) of this chapter.) or

* * * * *

■ 57. In § 34.101, the introductory text of paragraph (a) is revised to read as follows:

§ 34.101 Notifications.

(a) In addition to the reporting requirements specified in § 30.50 and under other sections of this chapter, such as § 21.21, each licensee shall send a written report to the NRC's Office of Nuclear Material Safety and Safeguards, Division of Industrial and Medical Nuclear Safety, by an appropriate method listed in § 30.6(a) of this chapter, within 30 days of the occurrence of any of the following incidents involving radiographic equipment:

* * * * *

PART 35—MEDICAL USE OF BYPRODUCT MATERIAL

■ 58. The authority citation for part 35 is revised to read as follows:

Authority: Secs. 81, 161, 182, 183, 68 Stat. 935, 948, 953, 954, as amended (42 U.S.C. 2111, 2201, 2232, 2233); sec. 201, 88 Stat. 1242, as amended (42 U.S.C. 5841); sec. 1704, 112 Stat. 2750 (44 U.S.C. 3504 note).

■ 59. In § 35.14, paragraph (c) and the introductory text of paragraph (b) are revised to read as follows:

§ 35.14 Notifications.

* * * * *

(b) A licensee shall notify the Commission no later than 30 days after:

* * * * *

(c) The licensee shall send the documents required in this section to the appropriate address identified in § 30.6 of this chapter.

■ 60. In § 35.3045, the introductory text of paragraph (d) is revised to read as follows:

§ 35.3045 Report and notification of a medical event.

* * * * *

(d) By an appropriate method listed in § 30.6(a) of this chapter, the licensee shall submit a written report to the appropriate NRC Regional Office listed in § 30.6 of this chapter within 15 days after discovery of the medical event.

* * * * *

■ 61. In § 35.3047, the introductory text of paragraph (d) is revised to read as follows:

§ 35.3047 Report and notification of a dose to an embryo/fetus or a nursing child.

* * * * *

(d) By an appropriate method listed in § 30.6(a) of this chapter, the licensee shall submit a written report to the appropriate NRC Regional Office listed in § 30.6 of this chapter within 15 days after discovery of a dose to the embryo/fetus or nursing child that requires a report in paragraphs (a) or (b) in this section.

* * * * *

■ 62. In § 35.3067, the second sentence is revised to read as follows:

§ 35.3067 Report of a leaking source.

* * * The report must be filed with the appropriate NRC Regional Office

listed in § 30.6 of this chapter, by an appropriate method listed in § 30.6(a), with a copy to the Director, Office of Nuclear Material Safety and Safeguards.
* * *

PART 39—LICENSES AND RADIATION SAFETY REQUIREMENTS FOR WELL LOGGING

■ 63. The authority citation for part 39 is revised to read as follows:

Authority: Secs. 53, 57, 62, 63, 65, 69, 81, 82, 161, 182, 183, 186, 68 Stat. 929, 930, 932, 933, 934, 935, 948, 953, 954, 955, as amended, sec. 234, 83 Stat. 444, as amended (42 U.S.C. 2073, 2077, 2092, 2093, 2095, 2099, 2111, 2112, 2201, 2232, 2233, 2236, 2282); secs. 201, as amended, 202, 206, 88 Stat. 1242, as amended, 1244, 1246 (42 U.S.C. 5841, 5842, 5846); sec. 1704, 112 Stat. 2750 (44 U.S.C. 3504 note).

■ 64. In § 39.77, paragraph (a) is revised to read as follows:

§ 39.77 Notification of incidents and lost sources; abandonment procedures for irretrievable sources.

(a) The licensee shall immediately notify the appropriate NRC Regional Office by telephone and subsequently, within 30 days, by confirmation in writing, using an appropriate method listed in § 30.6(a) of this chapter, if the licensee knows or has reason to believe that a sealed source has been ruptured. The written confirmation must designate the well or other location, describe the magnitude and extent of the escape of licensed materials, assess the consequences of the rupture, and explain efforts planned or being taken to mitigate these consequences.
* * * * *

PART 40—DOMESTIC LICENSING OF SOURCE MATERIAL

■ 65. The authority citation for part 40 is revised to read as follows:

Authority: Secs. 62, 63, 64, 65, 81, 161, 182, 183, 186, 68 Stat. 932, 933, 935, 948, 953, 954, 955, as amended, secs. 11e(2), 83, 84, Pub. L. 95–604, 92 Stat. 3033, as amended, 3039, sec. 234, 83 Stat. 444, as amended (42 U.S.C. 2014(e)(2), 2092, 2093, 2094, 2095, 2111, 2113, 2114, 2201, 2232, 2233, 2236, 2282); sec. 274, Pub. L. 86–373, 73 Stat. 688 (42 U.S.C. 2021); secs. 201, as amended, 202, 206, 88 Stat. 1242, as amended, 1244, 1246 (42 U.S.C. 5841, 5842, 5846); sec. 275, 92 Stat. 3021, as amended by Pub. L. 97–415, 96 Stat. 2067 (42 U.S.C. 2022); sec. 193, 104 Stat. 2835, as amended by Pub. L. 104–134, 110 Stat. 1321, 1321–349 (42 U.S.C. 2243); sec. 1704, 112 Stat. 2750 (44 U.S.C. 3504 note).

Section 40.7 also issued under Pub. L. 95–601, sec. 10, 92 Stat. 2951 (42 U.S.C. 5851). Section 40.31(g) also issued under sec. 122, 68 Stat. 939 (42 U.S.C. 2152). Section 40.46 also issued under sec. 184, 68 Stat. 954, as amended (42 U.S.C. 2234). Section 40.71 also issued under sec. 187, 68 Stat. 955 (42 U.S.C. 2237).

■ 66. In § 40.5, paragraph (a)(3) is added, and paragraphs (a)(1) and (a)(2), the introductory text of paragraph (b), and the last sentences of paragraphs (b)(2)(i), (b)(2)(ii), (b)(2)(iii), and (b)(2)(iv) are revised, to read as follows:

§ 40.5 Communications.

(a) * * *

(1) By mail addressed: ATTN: Document Control Desk, Director, Office of Nuclear Material Safety and Safeguards, or Director of Nuclear Security, Office of Nuclear Security and Incident Response, U.S. Nuclear Regulatory Commission, Washington, DC 20555–0001.

(2) By hand delivery to the NRC's offices at 11555 Rockville Pike, Rockville, Maryland.

(3) Where practicable, by electronic submission, for example, via Electronic Information Exchange, or CD–ROM. Electronic submissions must be made in a manner that enables the NRC to receive, read, authenticate, distribute, and archive the submission, and process and retrieve it a single page at a time. Detailed guidance on making electronic submissions can be obtained by visiting the NRC's Web site at *http://www.nrc.gov/site-help/eie.html,* by calling (301) 415–6030, by e-mail to *EIE@nrc.gov,* or by writing the Office of the Chief Information Officer, U.S. Nuclear Regulatory Commission, Washington, DC 20555–0001. The guidance discusses, among other topics, the formats the NRC can accept, the use of electronic signatures, and the treatment of nonpublic information.

(b) The Commission has delegated to the four Regional Administrators licensing authority for selected parts of its decentralized licensing program for nuclear materials as described in paragraph (b)(1) of this section. Any communication, report, or application covered under this licensing program must be submitted to the appropriate Regional Administrator. The administrators' jurisdictions and mailing addresses are listed in paragraph (b)(2) of this section.
* * * * *

(2) * * *

(i) * * * All mailed or hand-delivered inquiries, communications, and applications for a new license or an amendment or renewal of an existing license specified in paragraph (b)(1) of this section must use the following address: U.S. Nuclear Regulatory Commission, Region I, 475 Allendale Road, King of Prussia, Pennsylvania 19406–1415; where e-mail is appropriate it should be addressed to *RidsRgn1MailCenter@nrc.gov.*

(ii) * * * All mailed or hand-delivered inquiries, communications, and applications for a new license or an amendment or renewal of an existing license specified in paragraph (b)(1) of this section must use the following address: U.S. Nuclear Regulatory Commission, Region II Material Licensing/Inspection Branch, Sam Nunn Atlanta Federal Center, Suite 23T85, 61 Forsyth Street, Atlanta, Georgia 30303–8931; where e-mail is appropriate it should be addressed to *RidsRgn2MailCenter@nrc.gov.*

(iii) * * * All mailed or hand-delivered inquiries, communications, and applications for a new license or an amendment or renewal of an existing license specified in paragraph (b)(1) of this section must use the following address: U.S. Nuclear Regulatory Commission, Region III, Material Licensing Section, 801 Warrenville Road, Lisle, Illinois 60532–4351; where e-mail is appropriate it should be addressed to *RidsRgn3MailCenter@nrc.gov.*

(iv) * * * All mailed or hand-delivered inquiries, communications, and applications for a new license or an amendment or renewal of an existing license specified in paragraph (b)(1) of this section must use the following address: U.S. Nuclear Regulatory Commission, Region IV, Material Radiation Protection Section, 611 Ryan Plaza Drive, Suite 400, Arlington, Texas 76011–4005; where e-mail is appropriate it should be addressed to *RidsRgn4MailCenter@nrc.gov.*

■ 67. In § 40.7, paragraph (e)(3) is revised to read as follows:

§ 40.7 Employee protection.

* * * * *

(e) * * *

(3) Copies of NRC Form 3 may be obtained by writing to the Regional Administrator of the appropriate U.S. Nuclear Regulatory Commission Regional Office listed in appendix D to part 20 of this chapter, by calling (301) 415–5877, via e-mail to *forms@nrc.gov,* or by visiting the NRC's Web site at *http://www.nrc.gov* and selecting forms from the index found on the home page.
* * * * *

■ 68. In § 40.23, paragraphs (b)(1), (b)(2)(ix), (c), and (d) are revised to read as follows:

§ 40.23 General license for carriers of transient shipments of natural uranium other than in the form of ore or ore residue.

* * * * *

(b) * * *

(1) Persons generally licensed under paragraph (a) of this section, who plan to carry a transient shipment with scheduled stops at a United States port, shall notify the Director, Division of Nuclear Security, Office of Nuclear Security and Incident Response, using an appropriate method listed in § 40.5. The notification must be in writing and must be received at least 10 days before transport of the shipment commences at the shipping facility.

(2) * * *

(ix) For shipment between countries that are not party to the Convention on the Physical Protection of Nuclear Material (*i.e.*, not listed in appendix F to part 73 of this chapter), a certification that arrangements have been made to notify the Director, Division of Nuclear Security when the shipment is received at the destination facility.

(c) Persons generally licensed under this section making unscheduled stops at United States ports, immediately after the decision to make an unscheduled stop, shall provide to the Director, Division of Nuclear Security the information required under paragraph (b) of this section.

(d) A licensee who needs to amend a notification may do so by telephoning the Division of Nuclear Security at (301) 415–6828.

■ 69. In § 40.25, the first sentence of the introductory text of paragraph (c)(1) is revised to read as follows:

§ 40.25 General license for use of certain industrial products or devices.

* * * * *

(c) * * *

(1) Persons who receive, acquire, possess, or use depleted uranium pursuant to the general license established by paragraph (a) of this section shall file NRC Form 244, ''Registration Certificate—Use of Depleted Uranium Under General License,'' with the Director of the NRC's Division of Industrial and Medical Nuclear Safety, by an appropriate method listed in § 40.5, with a copy to the appropriate NRC Regional Administrator.* * *

* * * * *

■ 70. In § 40.31, the first sentence of paragraph (a) is revised to read as follows:

§ 40.31 Application for specific license.

(a) A person may file an application for specific license on NRC Form 313, ''Application for Material License,'' in accordance with the instructions in § 40.5 of this chapter. * * *

* * * * *

■ 71. In § 40.35, the first sentence of paragraph (e)(1) and the third sentence of paragraph (f) are revised to read as follows:

§ 40.35 Conditions of specific licenses issued pursuant to § 40.34.

* * * * *

(e)(1) Report to the Director of the Office of Nuclear Material Safety and Safeguards, by an appropriate method listed in § 40.5, all transfers of industrial products or devices to persons for use under the general license in § 40.25. * * *

* * * * *

(f) * * * The licensee shall furnish the change to the Director of the Office of Nuclear Material Safety and Safeguards, by an appropriate method listed in § 40.5, and to affected offsite response organizations, within six months after the change is made. * * *

■ 72. In § 40.60, the third sentence of the introductory text of paragraph (c)(2) is revised to read as follows:

§ 40.60 Reporting requirements.

* * * * *

(c)* * *

(2) * * * These written reports must be sent to the NRC's Document Control Desk by an appropriate method listed in § 40.5, with a copy to the appropriate NRC regional office listed in appendix D to part 20 of this chapter. * * *

* * * * *

■ 73. In § 40.64, the second sentence of paragraph (a), the last sentence of paragraph (b), and paragraph (c) are revised to read as follows:

§ 40.64 Reports.

(a) * * * Copies of the instructions may be obtained either by writing the U.S. Nuclear Regulatory Commission, Division of Nuclear Security, Office of Nuclear Security and Incident Response, Washington, DC 20555–0001, by e-mail to *RidsNsirDns@nrc.gov,* or by calling (301) 415–6828.* * *

(b) * * * Copies of the reporting instructions may be obtained either by writing to the U.S. Nuclear Regulatory Commission, Division of Nuclear Security, Office of Nuclear Security and Incident Response, Washington, DC 20555–0001, by e-mail to *RidsNsirDns@nrc.gov,* or by calling (301) 415–6828.

(c)(1) Except as specified in paragraph (d) of this section, each licensee who is authorized to possess uranium or thorium pursuant to a specific license shall notify the NRC Headquarters Operations Center by telephone, at the numbers listed in appendix A of part 73 of this chapter, of any incident in which an attempt has been made or is believed to have been made to commit a theft or unlawful diversion of more than 6.8 kilograms (kg) [15 pounds] of such material at any one time or more than 68 kg [150 pounds] of such material in any one calendar year.

(2) The licensee shall notify the NRC as soon as possible, but within 4 hours, of discovery of any incident in which an attempt has been made or is believed to have been made to commit a theft or unlawful diversion of such material. A copy of the written followup notification should also be made to the Director, Division of Nuclear Security, Office of Nuclear Security and Incident Response, by an appropriate method listed in § 40.5.

(3) The initial notification shall be followed within a period of sixty (60) days by a written followup notification submitted in accordance with § 40.5. A copy of the written followup notification shall also be sent to: ATTN: Document Control Desk, Director, Division of Nuclear Security, Office of Nuclear Security and Incident Response, U.S. Nuclear Regulatory Commission, Washington, DC 20555–0001.

(4) Subsequent to the submission of the written followup notification required by this paragraph, the licensee shall promptly update the written followup notification, in accordance with this paragraph, with any substantive additional information, which becomes available to the licensee, concerning an attempted or apparent theft or unlawful diversion of source material.

* * * * *

■ 74. In § 40.65, the first sentence of paragraph (a)(1) is revised to read as follows:

§ 40.65 Effluent monitoring reporting requirements.

(a) * * *

(1) Within 60 days after January 1, 1976 and July 1, 1976, and within 60 days after January 1 and July 1 of each year thereafter, submit a report to the Director of the Office of Nuclear Material Safety and Safeguards, using an appropriate method listed in § 40.5, with a copy to the appropriate NRC Regional Office shown in appendix D to part 20 of this chapter; which report must specify the quantity of each of the principal radionuclides released to unrestricted areas in liquid and in gaseous effluents during the previous six months of operation, and such other information as the Commission may require to estimate maximum potential annual radiation doses to the public resulting from effluent releases. * * *

* * * * *

■ 75. In § 40.66, the first sentence of paragraph (a) is revised to read as follows:

§ 40.66 Requirements for advance notice of export shipments of natural uranium.

(a) Each licensee authorized to export natural uranium, other than in the form of ore or ore residue, in amounts exceeding 500 kilograms, shall notify the Director, Division of Nuclear Security, Office of Nuclear Security and Incident Response, by an appropriate method listed in § 40.5. * * *

* * * * *

■ 76. In § 40.67, the first sentence of paragraph (a) is revised to read as follows:

§ 40.67 Requirement for advance notice for importation of natural uranium from countries that are not party to the Convention on the Physical Protection of Nuclear Material.

(a) Each licensee authorized to import natural uranium, other than in the form of ore or ore residue, in amounts exceeding 500 kilograms, from countries not party to the Convention on the Physical Protection of Nuclear Material (*see* appendix F to part 73 of this chapter) shall notify the Director, Division of Nuclear Security, Office of Nuclear Security and Incident Response, using an appropriate method listed in § 40.5. * * *

* * * * *

PART 50—DOMESTIC LICENSING OF PRODUCTION AND UTILIZATION FACILITIES

■ 77. The authority citation for part 50 is revised to read as follows:

Authority: Secs. 102, 103, 104, 105, 161, 182, 183, 186, 189, 68 Stat. 936, 937, 938, 948, 953, 954, 955, 956, as amended, sec. 234, 83 Stat. 444, as amended (42 U.S.C. 2132, 2133, 2134, 2135, 2201, 2232, 2233, 2236, 2239, 2282); secs. 201, as amended, 202, 206, 88 Stat. 1242, as amended, 1244, 1246 (42 U.S.C. 5841, 5842, 5846); sec. 1704, 112 Stat. 2750 (44 U.S.C. 3504 note).

Section 50.7 also issued under Pub. L. 95–601, sec. 10, 92 Stat. 2951 (42 U.S.C. 5851). Section 50.10 also issued under secs. 101, 185, 68 Stat. 955, as amended (42 U.S.C. 2131, 2235); sec. 102, Pub. L. 91–190, 83 Stat. 853 (42 U.S.C. 4332). Sections 50.13, 50.54(dd), and 50.103 also issued under sec. 108, 68 Stat. 939, as amended (42 U.S.C. 2138). Sections 50.23, 50.35, 50.55, and 50.56 also issued under sec. 185, 68 Stat. 955 (42 U.S.C. 2235). Sections 50.33a, 50.55a and appendix Q also issued under sec. 102, Pub. L. 91–190, 83 Stat. 853 (42 U.S.C. 4332). Sections 50.34 and 50.54 also issued under sec. 204, 88 Stat. 1245 (42 U.S.C. 5844). Sections 50.58, 50.91, and 50.92 also issued under Pub. L. 97–415, 96 Stat. 2073 (42 U.S.C. 2239). Section 50.78 also issued under sec. 122, 68 Stat. 939 (42 U.S.C. 2152). Sections 50.80–50.81 also issued under sec. 184, 68 Stat. 954, as amended (42 U.S.C. 2234). Appendix F also issued under sec. 187, 68 Stat. 955 (42 U.S.C 2237).

■ 78. Section 50.4 is revised to read as follows:

§ 50.4 Written communications.

(a) *General requirements.* All correspondence, reports, applications, and other written communications from the applicant or licensee to the Nuclear Regulatory Commission concerning the regulations in this part or individual license conditions must be sent either by mail addressed: ATTN: Document Control Desk, U.S. Nuclear Regulatory Commission, Washington, DC 20555–0001; by hand delivery to the NRC's offices at 11555 Rockville Pike, Rockville, Maryland, between the hours of 8:15 a.m. and 4 p.m. eastern time; or, where practicable, by electronic submission, for example, via Electronic Information Exchange, e-mail, or CD–ROM. Electronic submissions must be made in a manner that enables the NRC to receive, read, authenticate, distribute, and archive the submission, and process and retrieve it a single page at a time. Detailed guidance on making electronic submissions can be obtained by visiting the NRC's Web site at *http://www.nrc.gov/site-help/eie.html,* by calling (301) 415–6030, by e-mail at *EIE@nrc.gov,* or by writing the Office of the Chief Information Officer, U.S. Nuclear Regulatory Commission, Washington, DC 20555–0001. The guidance discusses, among other topics, the formats the NRC can accept, the use of electronic signatures, and the treatment of nonpublic information. If the communication is on paper, the signed original must be sent. If a submission due date falls on a Saturday, Sunday, or Federal holiday, the next Federal working day becomes the official due date.

(b) *Distribution requirements.* Copies of all correspondence, reports, and other written communications concerning the regulations in this part or individual license conditions must be submitted to the persons listed below (addresses for the NRC Regional Offices are listed in appendix D to part 20 of this chapter).

(1) *Applications for amendment of permits and licenses; reports; and other communications.* All written communications (including responses to: generic letters, bulletins, information notices, regulatory information summaries, inspection reports, and miscellaneous requests for additional information) that are required of holders of operating licenses or construction permits issued pursuant to this part, must be submitted as follows, except as otherwise specified in paragraphs (b)(2) through (b)(7) of this section: to the NRC's Document Control Desk (if on paper, the signed original), with a copy to the appropriate Regional Office, and a copy to the appropriate NRC Resident Inspector, if one has been assigned to the site of the facility.

(2) *Applications for permits and licenses, and amendments to applications.* Applications for construction permits, applications for operating licenses and amendments to either type of application must be submitted as follows, except as otherwise specified in paragraphs (b)(3) through (b)(7) in this section.

(i) Applications for licenses for facilities described in § 50.21 (a) and (c) and amendments to these applications must be sent to the NRC's Document Control Desk, with a copy to the appropriate Regional Office. If the application or amendment is on paper, the submission to the Document Control Desk must be the signed original.

(ii) Applications for permits and licenses for facilities described in § 50.21(b) or § 50.22, and amendments to these applications must be sent to the NRC's Document Control Desk, with a copy to the appropriate Regional Office, and a copy to the appropriate NRC Resident Inspector, if one has been assigned to the site of the facility. If the application or amendment is on paper, the submission to the Document Control Desk must be the signed original.

(3) *Acceptance review application.* Written communications required for an application for determination of suitability for docketing under § 50.30(a)(6) must be submitted to the NRC's Document Control Desk, with a copy to the appropriate Regional Office. If the communication is on paper, the submission to the Document Control Desk must be the signed original.

(4) *Security plan and related submissions.* Written communications, as defined in paragraphs (b)(4)(i) through (iv) of this section, must be submitted to the NRC's Document Control Desk, with a copy to the appropriate Regional Office. If the communication is on paper, the submission to the Document Control Desk must be the signed original.

(i) Physical security plan under § 50.34;

(ii) Safeguards contingency plan under § 50.34;

(iii) Change to security plan, guard training and qualification plan, or safeguards contingency plan made without prior Commission approval under § 50.54(p);

(iv) Application for amendment of physical security plan, guard training

and qualification plan, or safeguards contingency plan under § 50.90.

(5) *Emergency plan and related submissions.* Written communications as defined in paragraphs (b)(5)(i) through (iii) of this section must be submitted to the NRC's Document Control Desk, with a copy to the appropriate Regional Office, and a copy to the appropriate NRC Resident Inspector if one has been assigned to the site of the facility. If the communication is on paper, the submission to the Document Control Desk must be the signed original.

(i) Emergency plan under § 50.34;

(ii) Change to an emergency plan under § 50.54(q);

(iii) Emergency implementing procedures under appendix E.V of this part.

(6) *Updated FSAR.* An updated Final Safety Analysis Report (FSAR) or replacement pages, under § 50.71(e) must be submitted to the NRC's Document Control Desk, with a copy to the appropriate Regional Office, and a copy to the appropriate NRC Resident Inspector if one has been assigned to the site of the facility. Paper copy submissions may be made using replacement pages; however, if a licensee chooses to use electronic submission, all subsequent updates or submissions must be performed electronically on a total replacement basis. If the communication is on paper, the submission to the Document Control Desk must be the signed original. If the communications are submitted electronically, see Guidance for Electronic Submissions to the Commission.

(7) *Quality assurance related submissions.* (i) A change to the Safety Analysis Report quality assurance program description under § 50.54(a)(3) or § 50.55(f)(3), or a change to a licensee's NRC-accepted quality assurance topical report under § 50.54(a)(3) or § 50.55(f)(3), must be submitted to the NRC's Document Control Desk, with a copy to the appropriate Regional Office, and a copy to the appropriate NRC Resident Inspector if one has been assigned to the site of the facility. If the communication is on paper, the submission to the Document Control Desk must be the signed original.

(ii) A change to an NRC-accepted quality assurance topical report from nonlicensees (*i.e.*, architect/engineers, NSSS suppliers, fuel suppliers, constructors, etc.) must be submitted to the NRC's Document Control Desk. If the communication is on paper, the signed original must be sent.

(8) *Certification of permanent cessation of operations.* The licensee's certification of permanent cessation of operations, under § 50.82(a)(1), must state the date on which operations have ceased or will cease, and must be submitted to the NRC's Document Control Desk. This submission must be under oath or affirmation.

(9) *Certification of permanent fuel removal.* The licensee's certification of permanent fuel removal, under § 50.82(a)(1), must state the date on which the fuel was removed from the reactor vessel and the disposition of the fuel, and must be submitted to the NRC's Document Control Desk. This submission must be under oath or affirmation.

(c) *Form of communications.* All paper copies submitted to meet the requirements set forth in paragraph (b) of this section must be typewritten, printed or otherwise reproduced in permanent form on unglazed paper. Exceptions to these requirements imposed on paper submissions may be granted for the submission of micrographic, photographic, or similar forms.

(d) *Regulation governing submission.* Licensees and applicants submitting correspondence, reports, and other written communications under the regulations of this part are requested but not required to cite whenever practical, in the upper right corner of the first page of the submission, the specific regulation or other basis requiring submission.

(e) *Conflicting requirements.* The communications requirements contained in this section and §§ 50.12, 50.30, 50.36, 50.36a. 50.44, 50.49, 50.54, 50.55, 50.55a, 50.59, 50.62, 50.71, 50.73, 50.82, 50.90, and 50.91 supersede and replace all existing requirements in any license conditions or technical specifications in effect on January 5, 1987. Exceptions to these requirements must be approved by the Office of the Chief Information Officer, Nuclear Regulatory Commission, Washington, DC 20555–0001, telephone (301) 415–7233, e-mail *INFOCOLLECTS@nrc.gov.*

■ 79. In § 50.7, paragraph (e)(2) is revised to read as follows:

§ 50.7 Employee protection.

* * * * *

(e) * * *

(2) Copies of NRC Form 3 may be obtained by writing to the Regional Administrator of the appropriate U.S. Nuclear Regulatory Commission Regional Office listed in appendix D to part 20 of this chapter, by calling (301) 415–5877, via e-mail to *forms@nrc.gov,* or by visiting the NRC's Web site at *http://www.nrc.gov* and selecting forms from the index found on the home page.

* * * * *

■ 80. In § 50.30, paragraph (a)(2) is revised to read as follows:

§ 50.30 Filing of application for licenses; oath or affirmation.

(a) * * *

(2) The applicant shall maintain the capability to generate additional copies of the general information and the safety analysis report, or part thereof or amendment thereto, for subsequent distribution in accordance with the written instructions of the Director, Office of Nuclear Reactor Regulation, or the Director, Office of Nuclear Material Safety and Safeguards, as appropriate.

* * * * *

■ 81. In § 50.54, the second sentence of paragraph (s)(1) is revised to read as follows:

§ 50.54 Conditions of licenses.

* * * * *

(s)(1) * * * These plans must be forwarded to the Director of Nuclear Reactor Regulation, by appropriate method listed in § 50.4, with a copy to the Administrator of the appropriate NRC regional office. * * *

* * * * *

■ 82. In § 50.55, paragraph (e)(6)(ii) is revised to read as follows:

§ 50.55 Conditions of construction permits.

* * * * *

(e) * * *

(6) * * *

(ii) Written notification submitted to the Document Control Desk, U.S. Nuclear Regulatory Commission, by an appropriate method listed in § 50.4, with a copy to the appropriate Regional Administrator at the address specified in appendix D to part 20 of this chapter and a copy to the appropriate NRC resident inspector within 30 days following receipt of information by the director or responsible corporate officer under paragraph (e)(1)(iii) of this section, on the identification of a defect or failure to comply.

* * * * *

■ 83. In § 50.74, the introductory text is revised to read as follows:

§ 50.74 Notification of change in operator or senior operator status.

Each licensee shall notify the appropriate Regional Administrator as listed in appendix D to part 20 of this chapter within 30 days of the following in regard to a licensed operator or senior operator:

* * * * *

■ 84. In appendix L to part 50, the last sentence of the introductory paragraph is revised to read as follows:

Appendix L to Part 50—Information Requested by the Attorney General for Antitrust Review of Facility Construction Permits and Initial Operating Licenses

Introduction. * * * This document shall be submitted prior to any other part of the facility license application as provided in § 50.33a and in accordance with § 2.101 of this chapter.

* * * * *

PART 51—ENVIRONMENTAL PROTECTION REGULATIONS FOR DOMESTIC LICENSING AND RELATED REGULATORY FUNCTIONS

■ 85. The authority citation for part 51 is revised to read as follows:

Authority: Sec. 161, 68 Stat. 948, as amended, sec. 1701, 106 Stat. 2951, 2952, 2953, (42 U.S.C. 2201, 2297f); secs. 201, as amended, 202, 88 Stat. 1242, as amended, 1244 (42 U.S.C. 5841, 5842); sec. 1704, 112 Stat. 2750 (44 U.S.C. 3504 note). Subpart A also issued under National Environmental Policy Act of 1969, secs. 102, 104, 105, 83 Stat. 853–854, as amended (42 U.S.C. 4332, 4334, 4335); and Pub. L. 95–604, Title II, 92 Stat. 3033–3041; and sec. 193, Pub. L. 101–575, 104 Stat. 2835 (42 U.S.C. 2243). Sections 51.20, 51.30, 51.60, 51.80. and 51.97 also issued under secs. 135, 141, Pub. L. 97–425, 96 Stat. 2232, 2241, and sec. 148, Pub. L. 100–203, 101 Stat. 1330–223 (42 U.S.C. 10155, 10161, 10168). Section 51.22 also issued under sec. 274, 73 Stat. 688, as amended by 92 Stat. 3036–3038 (42 U.S.C. 2021) and under Nuclear Waste Policy Act of 1982, sec 121, 96 Stat. 2228 (42 U.S.C. 10141). Sections 51.43, 51.67, and 51.109 also under Nuclear Waste Policy Act of 1982, sec 114(f), 96 Stat. 2216, as amended (42 U.S.C. 10134(f)).

■ 86. In § 51.40, the introductory text of paragraph (c) and paragraphs (c)(1) through (c)(4) are revised to read as follows:

§ 51.40 Consultation with NRC Staff.

* * * * *

(c) Questions concerning environmental matters should be addressed to the following NRC staff offices as appropriate:

(1) *Utilization facilities:* ATTN: Document Control Desk, Director, Office of Nuclear Reactor Regulation, U.S. Nuclear Regulatory Commission, Washington, DC 20555–0001, telephone (301) 415–1270, e-mail *RidsNrrOd@nrc.gov.*

(2) *Production facilities:* ATTN: Document Control Desk, Director, Office of Nuclear Material Safety and Safeguards, U.S. Nuclear Regulatory Commission, Washington, DC 20555–0001, telephone (301) 415–7800, e-mail *RidsNmssOd@nrc.gov.*

(3) *Materials licenses:* ATTN: Document Control Desk, Director, Office of Nuclear Material Safety and Safeguards, U.S. Nuclear Regulatory Commission, Washington, DC 20555–0001, telephone (301) 415–7800, e-mail *RidsNmssOd@nrc.gov.*

(4) *Rulemaking:* ATTN: Chief, Rules and Directives Branch, Office of Administration, U.S. Nuclear Regulatory Commission, Washington, DC 20555–0001, telephone (800) 368–5642, e-mail *NRCREP@nrc.gov.*

* * * * *

■ 87. In § 51.45, the first sentence of paragraph (a) is revised to read as follows:

§ 51.45 Environmental report.

(a) *General.* As required by § 51.50, 51.53, 51.54, 51.60, 51.61, 51.62 or § 51.68, as appropriate, each applicant or petitioner for rulemaking shall submit with its application or petition for rulemaking one signed original of a separate document entitled ''Applicant's'' or ''Petitioner's Environmental Report,'' as appropriate. * * *

* * * * *

■ 88. In § 51.50, the first sentence is revised to read as follows:

§ 51.50 Environmental report—construction permit stage.

Each applicant for a permit to construct a production or utilization facility covered by § 51.20 shall submit with its application a separate document, entitled ''Applicant's Environmental Report—Construction Permit Stage,'' which shall contain the information specified in § 51.45, 51.51 and 51.52. * * *

■ 89. In § 51.53, the first sentence of paragraph (b), paragraph (c)(1), and the first sentence of paragraph (d) are revised to read as follows:

§ 51.53 Postconstruction environmental reports.

* * * * *

(b) *Operating license stage.* Each applicant for a license to operate a production or utilization facility covered by § 51.20 shall submit with its application a separate document entitled ''Supplement to Applicant's Environmental Report—Operating License Stage,'' which will update ''Applicant's Environmental Report—Construction Permit Stage.'' * * *

(c) *Operating license renewal stage.* (1) Each applicant for renewal of a license to operate a nuclear power plant under part 54 of this chapter shall submit with its application a separate document entitled ''Applicant's Environmental Report—Operating License Renewal Stage.''

* * * * *

(d) *Postoperating license stage.* Each applicant for a license amendment authorizing decommissioning activities for a production or utilization facility either for unrestricted use or based on continuing use restrictions applicable to the site; and each applicant for a license amendment approving a license termination plan or decommissioning plan under § 50.82 of this chapter either for unrestricted use or based on continuing use restrictions applicable to the site; and each applicant for a license or license amendment to store spent fuel at a nuclear power reactor after expiration of the operating license for the nuclear power reactor shall submit with its application a separate document, entitled ''Supplement to Applicant's Environmental Report—Post Operating License Stage,'' which will update ''Applicant's Environmental Report—Operating License Stage,'' as appropriate, to reflect any new information or significant environmental change associated with the applicant's proposed decommissioning activities or with the applicant's proposed activities with respect to the planned storage of spent fuel. * * *

■ 90. Section 51.55 is revised to read as follows:

§ 51.55 Environmental report—distribution.

(a) Each applicant for a license to construct and operate a production or utilization facility covered by paragraphs (b)(1), (b)(2), (b)(3), or (b)(4) of § 51.20, each applicant for renewal of an operating license for a nuclear power plant, each applicant for a license amendment authorizing the decommissioning of a production or utilization facility covered by § 51.20, and each applicant for a license or license amendment to store spent fuel at a nuclear power plant after expiration of the operating license for the nuclear power plant shall submit a copy to the Director of the Office of Nuclear Reactor Regulation, or a copy to the Director of the Office of Nuclear Material Safety and Safeguards, as appropriate, of an environmental report or any supplement to an environmental report. These reports must be sent either by mail addressed: ATTN: Document Control Desk; U.S. Nuclear Regulatory Commission, Washington, DC 20555–0001; by hand delivery to the NRC's offices at 11555 Rockville Pike, Rockville, Maryland, between the hours of 8:15 a.m. and 4:00 p.m. eastern time; or, where practicable, by electronic

submission, for example, via Electronic Information Exchange, or CD–ROM. Electronic submissions must be made in a manner that enables the NRC to receive, read, authenticate, distribute, and archive the submission, and process and retrieve it a single page at a time. Detailed guidance on making electronic submissions can be obtained by visiting the NRC's Web site at *http://www.nrc.gov/site-help/eie.html,* by calling (301) 415–6030, by e-mail to *EIE@nrc.gov,* or by writing the Office of the Chief Information Officer, U.S. Nuclear Regulatory Commission, Washington, DC 20555–0001. The guidance discusses, among other topics, the formats the NRC can accept, the use of electronic signatures, and the treatment of nonpublic information. If the communication is on paper, the signed original must be sent. If a submission due date falls on a Saturday, Sunday, or Federal holiday, the next Federal working day becomes the official due date. The applicant shall maintain the capability to generate additional copies of the environmental report or any supplement to the environmental report for subsequent distribution to parties and Boards in the NRC proceedings; Federal, State, and local officials; and any affected Indian tribes, in accordance with written instructions issued by the Director of the Office of Nuclear Reactor Regulation or the Director of the Office of Nuclear Material Safety and Safeguards, as appropriate.

(b) Each applicant for a license to manufacture a nuclear power reactor, or for an amendment to a license to manufacture, seeking approval of the final design of the nuclear power reactor, pursuant to appendix M to part 52 of this chapter shall submit to the Commission an environmental report or any supplement to an environmental report in the manner specified in § 50.4. The applicant shall maintain the capability to generate additional copies of the environmental report or any supplement to the environmental report for subsequent distribution to parties and Boards in the NRC proceeding; Federal, State, and local officials; and any affected Indian tribes, in accordance with written instructions issued by the Director of Nuclear Reactor Regulation.

■ 91. In § 51.60, the first sentence of paragraph (a) is revised to read as follows:

§ 51.60 Environmental report—material licenses.

(a) Each applicant for a license or other form of permission, or an amendment to or renewal of a license or other form of permission issued pursuant to parts 30, 32, 33, 34, 35, 36, 39, 40, 61, 70 and/or 72 of this chapter, and covered by paragraphs (b)(1) through (b)(5) of this section, shall submit with its application to: ATTN: Document Control Desk, Director, Nuclear Material Safety and Safeguards, a separate document, entitled ''Applicant's Environmental Report'' or ''Supplement to Applicant's Environmental Report,'' as appropriate. * * *

* * * * *

■ 92. In § 51.61, the first sentence is revised to read as follows:

§ 51.61 Environmental report—independent spent fuel installation (ISFSI) or monitored retrievable storage installation (MRS) license.

Each applicant for issuance of a license for storage of spent fuel in an independent spent fuel storage installation (ISFSI) or for the storage of spent fuel and high-level radioactive waste in a monitored retrievable storage installation (MRS) pursuant to part 72 of this chapter shall submit with its application to: ATTN: Document Control Desk, Director, Office of Nuclear Material Safety and Safeguards, a separate document entitled ''Applicant's Environmental Report—ISFSI License'' or ''Applicant's Environmental Report—MRS License,'' as appropriate. * * *

■ 93. In § 51.62, the first sentence of paragraph (a) is revised to read as follows:

§ 51.62 Environmental report—land disposal of radioactive waste licensed under 10 CFR part 61.

(a) Each applicant for issuance of a license for land disposal of radioactive waste pursuant to part 61 of this chapter shall submit with its application to: ATTN: Document Control Desk, Director of Nuclear Material Safety and Safeguards, a separate document, entitled ''Applicant's Environmental Report—License for Land Disposal of Radioactive Waste.'' * * *

* * * * *

■ 94. Section 51.66 is revised to read as follows:

§ 51.66 Environmental report—distribution.

Each applicant for a license or other form of permission, or an amendment to or renewal of a license or other form of permission issued pursuant to parts 30, 32, 33, 34, 35, 36, 39, 40, 61, 70 and/or 72 of this chapter, and covered by paragraphs (b)(1) through (6) of § 51.60; or by § 51.61 or § 51.62 shall submit to the Director of Nuclear Material Safety and Safeguards an environmental report or any supplement to an environmental report in the manner specified in § 51.55(a). The applicant shall maintain the capability to generate additional copies of the environmental report or any supplement to the environmental report for subsequent distribution to Federal, State, and local officials and any affected Indian tribes in accordance with written instructions issued by the Director of Nuclear Material Safety and Safeguards.

■ 95. Section 51.68 is revised to read as follows:

§ 51.68 Environmental report—rulemaking.

Petitioners for rulemaking requesting amendments of parts 30, 31, 32, 33, 34, 35, 36, 39, 40 or part 70 of this chapter concerning the exemption from licensing and regulatory requirements of or authorizing general licenses for any equipment, device, commodity or other product containing byproduct material, source material or special nuclear material shall submit with the petition a separate document entitled ''Petitioner's Environmental Report,'' which shall contain the information specified in § 51.45.

§ 51.69 [Removed]

■ 96. Section 51.69 is removed.

■ 97. In § 51.121, the introductory text and paragraphs (a) through (d) are revised to read as follows:

§ 51.121 Status of NEPA actions.

Individuals or organizations desiring information on the NRC's NEPA process or on the status of specific NEPA actions should address inquiries to:

(a) *Utilization facilities:* ATTN: Document Control Desk, Director, Office of Nuclear Reactor Regulation, U.S. Nuclear Regulatory Commission, Washington, DC 20555–0001, telephone (301) 415–1270, e-mail *RidsNrrOd@nrc.gov.*

(b) *Production facilities:* ATTN: Document Control Desk, Director, Office of Nuclear Material Safety and Safeguards, U.S. Nuclear Regulatory Commission, Washington, DC 20555–0001, telephone (301) 415–7800, e-mail *RidsNmssOd@nrc.gov.*

(c) *Materials licenses:* ATTN: Document Control Desk, Director, Office of Nuclear Material Safety and Safeguards, U.S. Nuclear Regulatory Commission, Washington, DC 20555–0001, telephone (301) 415–7800, e-mail *RidsNmssOd@nrc.gov.*

(d) *Rulemaking:* ATTN: Chief, Rules and Directives Branch, Office of Administration, U.S. Nuclear Regulatory Commission, Washington, DC 20555–0001, telephone (800) 368–5642, e-mail *NRCREP@nrc.gov.*

* * * * *

■ 98. In § 51.123, the first sentence of paragraph (a) and the first sentence of paragraph (b) are revised to read as follows:

§ 51.123 Charges for environmental documents; distribution to public; distribution to governmental agencies.

(a) *Distribution to public.* Upon written request to the Office of the Chief Information Officer, U.S. Nuclear Regulatory Commission, Washington, DC 20555–0001, e-mail *DISTRIBUTION@nrc.gov,* and to the extent available, single copies of draft environmental impact statements and draft findings of no significant impact will be made available to interested persons without charge. * * *

(b) *Distribution to governmental agencies.* Upon written request to the Office of the Chief Information Officer, U.S. Nuclear Regulatory Commission, Washington, DC 20555–0001, e-mail *DISTRIBUTION@nrc.gov,* and to the extent available, copies of draft and final environmental impact statements and draft final findings of no significant impact will be made available in the number requested to Federal, State and local agencies, Indian Tribes, and State, regional, and metropolitan clearinghouses. * * *

* * * * *

PART 52—EARLY SITE PERMITS; STANDARD DESIGN CERTIFICATIONS; AND COMBINED LICENSES FOR NUCLEAR POWER PLANTS

■ 99. The authority citation for part 52 is revised to read as follows:

Authority: Secs. 103, 104, 161, 182, 183, 186, 189, 68 Stat. 936, 948, 953, 954, 955, 956, as amended, sec. 234, 83 Stat. 444, as amended (42 U.S.C. 2133, 2201, 2232, 2233, 2236, 2239, 2282); secs. 201, 202, 206, 88 Stat. 1242, 1244, 1246, as amended (42 U.S.C. 5841, 5842, 5846); sec. 1704, 112 Stat. 2750 (44 U.S.C. 3504 note).

■ 100. In appendix A to part 52, section III.A is revised to read as follows:

Appendix A to Part 52—Design Certification Rule for the U.S. Advanced Boiling Water Reactor

* * * * *

III. Scope and Contents

A. Tier 1, Tier 2, and the generic technical specifications in the U.S. ABWR Design Control Document, GE Nuclear Energy, Revision 4 dated March 1997, are approved for incorporation by reference by the Director of the Office of the Federal Register in accordance with 5 U.S.C. 552(a) and 1 CFR part 51. Copies of the generic DCD may be obtained from the National Technical Information Service, 5285 Port Royal Road, Springfield, VA 22161, Web site at *http://www.ntis.gov.* A copy is available for examination and copying at the NRC Public Document Room, 11555 Rockville Pike, Rockville, Maryland, telephone (301) 415–4737, e-mail *pdr@nrc.gov.* Copies are also available for examination at the NRC Library, 11545 Rockville Pike, Rockville, Maryland, telephone (301) 415–5610, e-mail *LIBRARY@nrc.gov,* and the Office of the Federal Register, 800 North Capitol Street, NW., Suite 700, Washington, DC, e-mail *fedreg.info@nara.gov.*

* * * * *

■ 101. In appendix B to part 52, section III.A is revised to read as follows:

Appendix B to Part 52—Design Certification Rule for the System 80+ Design

* * * * *

III. Scope and Contents

A. Tier 1, Tier 2, and the generic technical specifications in the System 80+ Design Control Document, ABB–CE, with revisions dated January 1997, are approved for incorporation by reference by the Director of the Office of the Federal Register in accordance with 5 U.S.C. 552(a) and 1 CFR part 51. Copies of the generic DCD may be obtained from the National Technical Information Service, 5285 Port Royal Road, Springfield, VA 22161, Web site at *http://www.ntis.gov.* A copy is available for examination and copying at the NRC Public Document Room, 11555 Rockville Pike, Rockville, Maryland, telephone (301) 415–4737, e-mail *pdr@nrc.gov.* Copies are also available for examination at the NRC Library, 11545 Rockville Pike, Rockville, Maryland, telephone (301) 415–5610, e-mail *LIBRARY@nrc.gov,* and the Office of the Federal Register, 800 North Capitol Street, NW., Suite 700, Washington, DC, e-mail *fedreg.info@nara.gov.*

* * * * *

■ 102. In appendix C to part 52, the third and fourth sentences of section III.A are revised to read as follows:

Appendix C to Part 52—Design Certification Rule for the AP600 Design

* * * * *

III. Scope and Contents

A. * * * A copy of the generic DCD is available for examination and copying at the NRC Public Document Room, 11555 Rockville Pike, Rockville, Maryland, telephone (301) 415–4737, e-mail *pdr@nrc.gov.* Copies are also available for examination at the NRC Library, 11545 Rockville Pike, Rockville, Maryland, telephone (301) 415–5610, e-mail *LIBRARY@nrc.gov;* and the Office of the Federal Register, 800 North Capitol Street, NW., Suite 700, Washington, DC, e-mail *fedreg.info@nara.gov.*

* * * * *

■ 103. In appendix O to part 52, paragraph 2 is revised to read as follows:

Appendix O to Part 52—Standardization of Design: Staff Review of Standard Designs

* * * * *

2. The submittal for review of the standard design must be made in the same manner as provided in §§ 50.4 and 50.30 for license applications.

* * * * *

■ 104. In appendix Q to part 52, the first sentence of paragraph 2 is revised to read as follows:

Appendix Q to Part 52—Pre-Application Early Review of Site Suitability Issues

* * * * *

2. The submittal for early review of site suitability issue(s) must be made in the same manner as provided in §§ 50.4 and 50.30 for license applications. * * *

* * * * *

PART 55—OPERATORS' LICENSES

■ 105. The authority citation for part 55 is revised to read as follows:

Authority: Secs. 107, 161, 182, 68 Stat. 939, 948, 953, as amended, sec. 234, 83 Stat. 444, as amended (42 U.S.C. 2137, 2201, 2232, 2282); secs. 201, as amended, 202, 88 Stat. 1242, as amended, 1244 (42 U.S.C. 5841, 5842); sec. 1704, 112 Stat. 2750 (44 U.S.C. 3504 note).

Sections 55.41, 55.43, 55.45, and 55.59 also issued under sec. 306, Pub. L. 97–425, 96 Stat. 2262 (42 U.S.C. 10226). Section 55.61 also issued under secs. 186, 187, 68 Stat. 955 (42 U.S.C. 2236, 2237).

■ 106. In § 55.5, paragraphs (a)(2), (b)(2), and (b)(3) are revised, and paragraph (a)(3) is added, to read as follows:

§ 55.5 Communications.

(a) * * *

(1) * * *

(2) By delivery in person to the NRC's offices at 11555 Rockville Pike, Rockville, Maryland, or

(3) Where practicable, by electronic submission, for example, via Electronic Information Exchange, or CD–ROM. Electronic submissions must be made in a manner that enables the NRC to receive, read, authenticate, distribute, and archive the submission, and process and retrieve it a single page at a time. Detailed guidance on making electronic submissions can be obtained by visiting the NRC's Web site at *http://www.nrc.gov/site-help/eie.html,* by calling (301) 415–6030, by e-mail to *EIE@nrc.gov* or by writing the Office of the Chief Information Officer, U.S. Nuclear Regulatory Commission, Washington, DC 20555–0001. The guidance discusses, among other topics, the formats the NRC can accept, the use of electronic signatures, and the treatment of nonpublic information.

(b) * * *

(2) Any application for a license or license renewal filed under the regulations in this part involving a nuclear power reactor licensed under 10 CFR part 50 and any related inquiry, communication, information, or report must be submitted to the Regional Administrator by an appropriate method listed in paragraph (a) of this section. The Regional Administrator or the Administrator's designee will transmit to the Director of Nuclear Reactor Regulation any matter that is not within the scope of the Regional Administrator's delegated authority.

(i) If the nuclear power reactor is located in Region I, submissions must be made to the Regional Administrator of Region I. Submissions by mail or hand delivery must be addressed to the Administrator at U.S. Nuclear Regulatory Commission, 475 Allendale Road, King of Prussia, Pennsylvania 19406–1415; where e-mail is appropriate it should be addressed to *RidsRgn1MailCenter@nrc.gov.*

(ii) If the nuclear power reactor is located in Region II, submissions must be made to the Regional Administrator of Region II. Submissions by mail or hand delivery must be addressed to the Administrator at U.S. Nuclear Regulatory Commission, Sam Nunn Atlanta Federal Center, Suite 23T85, 61 Forsyth Street, SW, Atlanta, GA 30303–8931; where e-mail is appropriate it should be addressed to *RidsRgn2MailCenter@nrc.gov.*

(iii) If the nuclear power reactor is located in Region III, submissions must be made to the Regional Administrator of Region III. Submissions by mail or hand delivery must be addressed to the Administrator at U.S. Nuclear Regulatory Commission, 801 Warrenville Road, Lisle, IL 60532–4351; where e-mail is appropriate it should be addressed to *RidsRgn3MailCenter@nrc.gov.*

(iv) If the nuclear power reactor is located in Region IV, submissions must be made to the Regional Administrator of Region IV. Submissions by mail or hand delivery must be addressed to the Administrator at U.S. Nuclear Regulatory Commission, 611 Ryan Plaza Drive, Suite 1000, Arlington, Texas 76011–4005; where e-mail is appropriate it should be addressed to *RidsRgn4MailCenter@nrc.gov.*

(3)(i) Any application for a license or license renewal filed under the regulations in this part involving a test and research reactor facility licensed under 10 CFR part 50 and any related inquiry, communication, information, or report must be submitted to the Office of Nuclear Reactor Regulation, Division of Regulatory Improvement Programs at the NRC's headquarters, by an appropriate method listed in paragraph (a) of this section.

(ii) For all test and research reactor facilities located in the NRC's Regions, submissions must be made to the Office of Nuclear Reactor Regulation, Director of the Division of Regulatory Improvement Programs at the NRC's headquarters, by an appropriate method listed in paragraph (a) of this section.

■ 107. In § 55.23, the introductory text is revised to read as follows:

§ 55.23 Certification.

To certify the medical fitness of the applicant, an authorized representative of the facility licensee shall complete and sign NRC Form 396, ''Certification of Medical Examination by Facility Licensee,'' which can be obtained by writing the Office of the Chief Information Officer, U.S. Nuclear Regulatory Commission, Washington, DC 20555–0001, by calling (301) 415–5877, or by visiting the NRC's Web site at *http://www.nrc.gov* and selecting forms from the index found on the home page.

* * * * *

■ 108. In § 55.31, paragraphs (a)(1) and (a)(2) are revised to read as follows:

§ 55.31 How to apply.

(a) * * *

(1) Complete NRC Form 398, ''Personal Qualification Statement—Licensee,'' which can be obtained by writing the Office of the Chief Information Officer, U.S. Nuclear Regulatory Commission, Washington, DC 20555–0001, by calling (301) 415–5877, or by visiting the NRC's Web site at *http://www.nrc.gov* and selecting forms from the index found on the home page;

(2) File an original of NRC Form 398, together with the information required in paragraphs (a)(3), (4), (5) and (6) of this section, with the appropriate Regional Administrator;

* * * * *

■ 109. In § 55.57, paragraph (a)(2) is revised to read as follows:

§ 55.57 Renewal of licenses.

(a) * * *

(2) File an original of NRC Form 398 with the appropriate Regional Administrator specified in § 55.5(b).

* * * * *

PART 60—DISPOSAL OF HIGH-LEVEL RADIOACTIVE WASTES IN GEOLOGIC REPOSITORIES

■ 110. The authority citation for part 60 is revised to read as follows:

Authority: Secs. 51, 53, 62, 63, 65, 81, 161, 182, 183, 68 Stat. 929, 930, 932, 933, 935, 948, 953, 954, as amended (42 U.S.C. 2071, 2073, 2092, 2093, 2095, 2111, 2201, 2232, 2233); secs. 202, 206, 88 Stat. 1244, 1246 (42 U.S.C. 5842, 5846); secs. 10 and 14, Pub. L. 95–601, 92 Stat. 2951 (42 U.S.C. 2021a and 5851); sec. 102, Pub. L. 91–190, 83 Stat. 853 (42 U.S.C. 4332); secs. 114, 121, Pub. L. 97–425, 96 Stat. 2213g, 2228, as amended (42 U.S.C. 10134, 10141), and Pub. L. 102–486, sec. 2902, 106 Stat. 3123 (42 U.S.C. 5851); sec. 1704, 112 Stat. 2750 (44 U.S.C. 3504 note).

■ 111. In § 60.4, paragraph (a) is revised to read as follows:

§ 60.4 Communications and records.

(a) Except where otherwise specified, all communications and reports concerning the regulations in this part and applications filed under them should be sent by mail addressed: ATTN: Document Control Desk: Director, Office of Nuclear Material Safety and Safeguards, U.S. Nuclear Regulatory Commission, Washington, DC 20555–0001; by hand delivery to the NRC's offices at 11555 Rockville Pike, Rockville, Maryland; or, where practicable, by electronic submission, for example, via Electronic Information Exchange, or CD–ROM. Electronic submissions must be made in a manner that enables the NRC to receive, read, authenticate, distribute, and archive the submission, and process and retrieve it a single page at a time. Detailed guidance on making electronic submissions can be obtained by visiting the NRC's Web site at *http://www.nrc.gov/site-help/eie.html,* by calling (301) 415–6030, by e-mail to *EIE@nrc.gov,* or by writing the Office of the Chief Information Officer, U.S. Nuclear Regulatory Commission, Washington, DC 20555–0001. The guidance discusses, among other topics, the formats the NRC can accept, the use of electronic signatures, and the treatment of nonpublic information.

* * * * *

■ 112. In § 60.9, paragraph (e)(2) is revised to read as follows:

§ 60.9 Employee protection.

* * * * *

(e) * * *

(2) Copies of NRC Form 3 may be obtained by writing to the Regional Administrator of the appropriate U.S. Nuclear Regulatory Commission Regional Office listed in appendix D to part 20 of this chapter, by calling (301) 415–5877, via e-mail to *forms@nrc.gov,* or by visiting the NRC's Web site at *http://www.nrc.gov* and selecting forms from the index found on the home page.

* * * * *

■ 113. In § 60.22, paragraphs (a) and (b) are revised to read as follows:

§ 60.22 Filing and distribution of application.

(a) An application for a license to receive and possess source, special nuclear, or byproduct material at a geologic repository operations area at a site which has been characterized, and any amendments thereto, and an accompanying environmental impact statement and any supplements, must be signed by the Secretary of Energy or the Secretary's authorized representative and must be filed with the Director.

(b) DOE shall maintain the capability to generate additional copies for distribution in accordance with written instructions from the Director or the Director's designee.

* * * * *

■ 114. In § 60.44, the fifth sentence of paragraph (b) is revised to read as follows:

§ 60.44 Changes, tests, and experiments.

* * * * *

(b) * * * The DOE shall furnish the report to the appropriate NRC Regional Office shown in appendix D to part 20 of this chapter, by an appropriate method listed in § 60.4(a), with a copy to the Director of the NRC's Office of Nuclear Material Safety and Safeguards. * * *

* * * * *

PART 61—LICENSING REQUIREMENTS FOR LAND DISPOSAL OF RADIOACTIVE WASTE

■ 115. The authority citation for part 61 is revised to read as follows:

Authority: Secs. 53, 57, 62, 63, 65, 81, 161, 182, 183, 68 Stat. 930, 932, 933, 935, 948, 953, 954, as amended (42 U.S.C. 2073, 2077, 2092, 2093, 2095, 2111, 2201, 2232, 2233); secs. 202, 206, 88 Stat. 1244, 1246, (42 U.S.C. 5842, 5846); secs. 10 and 14, Pub. L. 95–601, 92 Stat. 2951 (42 U.S.C. 2021a and 5851) and Pub. L. 102–486, sec. 2902, 106 Stat. 3123, (42 U.S.C. 5851); sec. 1704, 112 Stat. 2750 (44 U.S.C. 3504 note).

■ 116. Section 61.4 is revised to read as follows:

§ 61.4 Communications.

Except where otherwise specified, all communications and reports concerning the regulations in this part and applications filed under them should be sent by mail addressed: ATTN: Document Control Desk; Director, Office of Nuclear Material Safety and Safeguards, U.S. Nuclear Regulatory Commission, Washington, DC 20555–0001; by hand delivery to the NRC's Offices at 11555 Rockville Pike, Rockville, Maryland; or, where practicable, by electronic submission, for example, via Electronic Information Exchange, or CD–ROM. Electronic submissions must be made in a manner that enables the NRC to receive, read, authenticate, distribute, and archive the submission, and process and retrieve it a single page at a time. Detailed guidance on making electronic submissions can be obtained by visiting the NRC's Web site at *http://www.nrc.gov/site-help/eie.html,* by calling (301) 415–6030, by e-mail to *EIE@nrc.gov,* or by writing the Office of the Chief Information Officer, U.S. Nuclear Regulatory Commission, Washington, DC 20555–0001. The guidance discusses, among other topics, the formats the NRC can accept, the use of electronic signatures, and the treatment of nonpublic information.

■ 117. In § 61.9, paragraph (e)(2) is revised to read as follows:

§ 61.9 Employee protection.

* * * * *

(e) * * *

(2) Copies of NRC Form 3 can be obtained by writing to the Regional Administrator of the appropriate U.S. Nuclear Regulatory Commission Regional Office listed in appendix D to part 20 of this chapter, by calling (301) 415–5877, via e-mail to *forms@nrc.gov,* or by visiting the NRC's Web site at *http://www.nrc.gov* and selecting forms from the index found on the home page.

* * * * *

■ 118. In § 61.20, paragraphs (a) and (b) are revised to read as follows:

§ 61.20 Filing and distribution of application.

(a) An application for a license under this part, and any amendments thereto, must be filed with the Director, must be signed by the applicant or the applicant's authorized representative under oath or affirmation, and, if the document is in paper form, must be the signed original.

(b) The applicant shall maintain the capability to generate additional copies of the application for distribution in accordance with written instructions from the Director or the Director's designee.

* * * * *

■ 119. In § 61.80, the first sentence of paragraph (i)(1) is revised to read as follows:

§ 61.80 Maintenance of records, reports, and transfers.

* * * * *

(i)(1) Each licensee authorized to dispose of waste materials received from other persons under this part shall submit annual reports to the Director of the Division of Waste Management in the NRC's Office of Nuclear Material Safety and Safeguards, by an appropriate method listed in § 60.4, with a copy to the appropriate NRC Regional Office shown in appendix D to part 20 of this chapter. * * *

* * * * *

PART 62—CRITERIA AND PROCEDURES FOR EMERGENCY ACCESS TO NON-FEDERAL AND REGIONAL LOW-LEVEL WASTE DISPOSAL FACILITIES

■ 120. The authority citation for part 62 is revised to read as follows:

Authority: Secs. 81, 161, as amended, 68 Stat. 935, 948, 949, 950, 951, as amended (42 U.S.C. 2111, 2201); secs. 201, 209, as amended, 88 Stat. 1242, 1248, as amended (42 U.S.C. 5841, 5849); secs. 3, 4, 5, 6, 99 Stat. 1843, 1844, 1845, 1846, 1847, 1848, 1849, 1850, 1851, 1852, 1853, 1854, 1855, 1856, 1857 (42 U.S.C. 2021c, 2021d, 2021e, 2021f); sec. 1704, 112 Stat. 2750 (44 U.S.C. 3504 note).

■ 121. Section 62.3 is revised to read as follows:

§ 62.3 Communications.

Except where otherwise specified, all communications and reports concerning the regulations in this part and applications filed under them should be sent by mail addressed: ATTN: Document Control Desk, Director, Office of Nuclear Material Safety and Safeguards, U.S. Nuclear Regulatory Commission, Washington, DC 20555–0001; by hand delivery to the NRC's offices at 11555 Rockville Pike, Rockville, Maryland; or, where practicable, by electronic submission, for example, via Electronic Information Exchange, or CD–ROM. Electronic submissions must be made in a manner that enables the NRC to receive, read, authenticate, distribute, and archive the submission, and process and retrieve it a single page at a time. Detailed guidance on making electronic submissions can be obtained by visiting the NRC's Web site at *http://www.nrc.gov/site-help/eie.html,* by calling (301) 415–6030, by e-mail to *EIE@nrc.gov,* or by writing the Office of the Chief Information Officer, U.S. Nuclear Regulatory Commission, Washington, DC 20555–0001. The guidance discusses, among other topics, the formats the NRC can accept, the use of electronic signatures, and the treatment of nonpublic information.

■ 122. In § 62.11, the first sentence of paragraph (a) is revised to read as follows:

§ 62.11 Filing and distribution of a determination request.

(a) The person submitting a request for a Commission determination shall file a signed original of the request with the Commission at the address specified in § 62.3 of this part, with a copy also provided to the appropriate Regional Administrator at the address specified in appendix D to part 20 of this chapter. * * *

* * * * *

PART 63—DISPOSAL OF HIGH-LEVEL RADIOACTIVE WASTES IN A GEOLOGIC REPOSITORY AT YUCCA MOUNTAIN, NEVADA

■ 123. The authority citation for part 63 is revised to read as follows:

Authority: Secs. 51, 53, 62, 63, 65, 81, 161, 182, 183, 68 Stat. 929, 930, 932, 933, 935, 948, 953, 954, as amended (42 U.S.C. 2071, 2073, 2092, 2093, 2095, 2111, 2201, 2232, 2233); secs. 202, 206, 88 Stat.1244, 1246 (42 U.S.C. 5842, 5846); secs. 10 and 14, Pub. L. 95–601, 92 Stat. 2951 (42 U.S.C. 2021a and 5851); sec. 102, Pub. L. 91–190, 83 Stat. 853 (42 U.S.C. 4332); secs. 114, 121, Pub. L. 97–425, 96 Stat. 2213g, 2238, as amended (42 U.S.C. 10134, 10141), and Pub. L. 102–486, sec. 2902, 106 Stat. 3123 (42 U.S.C. 5851); sec. 1704, 112 Stat. 2750 (44 U.S.C. 3504 note).

■ 124. In § 63.2, the definition of *Publicly Available Records System (PARS) Library* is added to read as follows:

§ 63.2 Definitions.

* * * * *

Publicly Available Records System (PARS) Library means the electronic library generated by the NRC's Agencywide Documents Access and Management System (ADAMS) to provide access to public documents. PARS has full text documents which can be searched using specific fields and parameters. The public can search, download, print, create reports, and order documents online. The PARS Library contains publicly available documents created or received by NRC since November 1, 1999, as well as some older documents that the NRC has retrofit into the collection. PARS is accessible from the NRC Web site at *http://www.nrc.gov/reading-rm.html.*

* * * * *

■ 125. In § 63.4, paragraph (a) is revised to read as follows:

§ 63.4 Communications and records.

(a) Except as otherwise specified, in this part or in subpart J of part 2 of this chapter, all communications and reports concerning the regulations in this part and applications filed under them should be sent to the NRC as follows:

(1) By mail addressed: ATTN: Document Control Desk; Director, Office of Nuclear Material Safety and Safeguards; U.S. Nuclear Regulatory Commission, Washington, DC 20555–0001;

(2) By hand delivery to the NRC's offices at 11555 Rockville Pike, Rockville, Maryland; ATTN: Document Control Desk: Director, Office of Nuclear Material Safety and Safeguards; or,

(3) Where practicable, by electronic submission, for example, via Electronic Information Exchange, or CD–ROM. Electronic submissions must be made in a manner that enables the NRC to receive, read, authenticate, distribute, and archive the submission, and process and retrieve it a single page at a time. Detailed guidance on making electronic submissions can be obtained by visiting the NRC's Web site at *http://www.nrc.gov/site-help/eie.html,* by calling (301) 415–6030, by e-mail to *EIE@nrc.gov,* or by writing the Office of the Chief Information Officer, U.S. Nuclear Regulatory Commission, Washington, DC 20555–0001. The guidance discusses, among other topics, the formats the NRC can accept, the use of electronic signatures, and the treatment of nonpublic information.

* * * * *

■ 126. In § 63.9, paragraph (e)(2) is revised to read as follows:

§ 63.9 Employee protection.

(e) * * *

(2) Copies of NRC Form 3 may be obtained by writing to the Regional Administrator of the appropriate U.S. Nuclear Regulatory Commission Regional Office listed in appendix D to part 20 of this chapter, by calling (301) 415–5877, via e-mail to *forms@nrc.gov,* or by accessing the NRC Web site at *http://www.nrc.gov* and selecting forms from the index found on the home page.

* * * * *

■ 127. In § 63.16, paragraph (f) is revised to read as follows:

§ 63.16 Review of site characterization activities.

* * * * *

(f) The NRC shall place all correspondence between DOE and NRC resulting from the requirements of this section, including the reports described in paragraph (b) of this section, in the Publicly Available Records System (PARS) Library.

* * * * *

■ 128. In § 63.22, paragraphs (a), (b), and the first sentence of paragraph (d) are revised to read as follows:

§ 63.22 Filing and distribution of application.

(a) An application for a license to receive and possess source, special nuclear, or byproduct material at a geologic repository operations area at the Yucca Mountain site that has been characterized, any amendments to the application, and an accompanying environmental impact statement and any supplements, must be signed by the Secretary of Energy or the Secretary's authorized representative and must be filed with the Director in triplicate on paper and optical storage media.

(b) DOE shall submit 30 additional copies, on paper and optical storage media, of each portion of the application and any amendments, and each environmental impact statement and any supplements. DOE shall maintain the capability to generate additional copies for distribution in accordance with written instructions from the Director or the Director's designee.

* * * * *

(d) When an application, and any amendment to it is filed, copies on paper and optical storage media must be made available in appropriate locations near the proposed geologic repository operations areas at the Yucca Mountain site for inspection by the public. * * *

* * * * *

■ 129. In § 63.44, paragraph (c)(2) is revised to read as follows:

§ 63.44 Changes, tests, and experiments.

* * * * *

(c) * * *

(2) No less frequently than every 24 months, DOE shall prepare a report containing a brief description of such changes, tests, and experiments, including a summary of the evaluation of each. These written reports must be sent to the NRC using an appropriate method listed in § 63.4; addressed: ATTN: Document Control Desk; Director, Office of Nuclear Material Safety and Safeguards; U.S. Nuclear Regulatory Commission, Washington, DC 20555–001; and DOE shall furnish the report to the appropriate NRC Regional Office shown in appendix D to part 20 of this chapter. Any report submitted under this paragraph must be made a part of the public record of the licensing proceedings.

* * * * *

■ 130. In § 63.61, paragraph (c) is revised to read as follows:

§ 63.61 Provision of information.

* * * * *

(c) The NRC shall place communications by the Director under

this section in the Publicly Available Records System (PARS) Library and furnish copies to DOE.

■ 131. In § 63.63, paragraph (f) is revised to read as follows:

§ 63.63 Participation in license reviews.

* * * * *

(f) The NRC shall place all proposals submitted under this section, and responses to them, in the Publicly Available Records System (PARS) Library.

■ 132. In § 63.73, paragraph (d) is revised to read as follows:

§ 63.73 Reports of deficiencies.

* * * * *

(d) The requisite notification must be as specified in the applicable regulation. By an appropriate method listed in § 63.4 of this chapter, written reports must be submitted to NRC addressed: ATTN: Document Control Desk; Director, Office of Nuclear Material Safety and Safeguards; U.S. Nuclear Regulatory Commission, Washington, DC 20555–001; and to the NRC onsite representative. DOE shall also furnish the report to the appropriate NRC Regional Office shown in appendix D to part 20 of this chapter.

■ 133. In § 63.144, paragraph (b)(1) is revised to read as follows:

§ 63.144 Quality assurance program change.

* * * * *

(b) * * *

(1) By an appropriate method listed in § 63.4 of this chapter, the signed document must be submitted to the Nuclear Regulatory Commission, addressed: ATTN: Document Control Desk; Director, Office of Nuclear Material and Safeguards; U.S. Nuclear Regulatory Commission, Washington, DC 20555–0001, and one copy to the appropriate NRC Resident Inspector, if one has been assigned to the site or facility.

* * * * *

PART 70—DOMESTIC LICENSING OF SPECIAL NUCLEAR MATERIAL

■ 134. The authority citation for part 70 is revised to read as follows:

Authority: Secs. 51, 53, 161, 182, 183, 68 Stat. 929, 930, 948, 953, 954, as amended, sec. 234, 83 Stat. 444, as amended (42 U.S.C. 2071, 2073, 2201, 2232, 2233, 2282, 2297f); secs. 201, as amended, 202, 204, 206, 88 Stat. 1242, as amended, 1244, 1245, 1246 (42 U.S.C. 5841, 5842, 5845, 5846). Sec. 193, 104 Stat. 2835, as amended by Pub. L. 104–134, 110 Stat. 1321, 1321–349 (42 U.S.C. 2243); sec. 1704, 112 Stat. 2750 (44 U.S.C. 3504 note).

Sections 70.1(c) and 70.20a(b) also issued under secs. 135, 141, Pub. L. 97–425, 96 Stat. 2232, 2241 (42 U.S.C. 10155, 10161). Section 70.7 also issued under Pub. L. 95–601, sec. 10, 92 Stat. 2951 (42 U.S.C. 5851). Section 70.21(g) also issued under sec. 122, 68 Stat. 939 (42 U.S.C. 2152). Section 70.31 also issued under sec. 57d, Pub. L. 93–377, 88 Stat. 475 (42 U.S.C. 2077). Sections 70.36 and 70.44 also issued under sec. 184, 68 Stat. 954, as amended (42 U.S.C. 2234). Section 70.81 also issued under secs. 186, 187, 68 Stat. 955 (42 U.S.C. 2236, 2237). Section 70.82 also issued under sec. 108, 68 Stat. 939, as amended (42 U.S.C. 2138).

■ 135. In § 70.5, paragraphs (a)(1) and (a)(2), the introductory text of paragraph (b), and the last sentences of paragraphs (b)(2)(i), (b)(2)(ii), (b)(2)(iii), and (b)(2)(iv) are revised and paragraphs (a)(3) and (a)(4) are added, to read as follows:

§ 70.5 Communications.

(a) * * *

(1) By mail addressed to: ATTN: Document Control Desk, Director, Office of Nuclear Material Safety and Safeguards or Director, Division of Nuclear Security, Office of Nuclear Security and Incident Response, U.S. Nuclear Regulatory Commission, Washington, DC 20555–0001.

(2) By hand delivery to the Director, Office of Nuclear Material Safety and Safeguards or Director, Division of Nuclear Security, Office of Nuclear Security and Incident Response at the NRC's offices at 11555 Rockville Pike, Rockville, Maryland.

(3) Where practicable, by electronic submission, for example, via Electronic Information Exchange, and CD–ROM. Electronic submissions must be made in a manner that enables the NRC to receive, read, authenticate, distribute, and archive the submission, and process and retrieve it a single page at a time. Detailed guidance on making electronic submissions can be obtained by visiting the NRC's Web site at *http://www.nrc.gov/site-help/eie.html,* by calling (301) 415–6030, by e-mail to *EIE@nrc.gov,* or by writing the Office of the Chief Information Officer, U.S. Nuclear Regulatory Commission, Washington, DC 20555–0001. The guidance discusses, among other topics, the formats the NRC can accept, the use of electronic signatures, and the treatment of nonpublic information.

(4) Classified communications shall be transmitted to the NRC Headquarters' classified mailing address as specified in appendix A to part 73 of this chapter or delivered by hand in accordance with paragraph (a)(2) of this section.

(b) The Commission has delegated to the four Regional Administrators licensing authority for selected parts of its decentralized licensing program for nuclear materials as described in paragraph (b)(1) of this section. Any communication, report, or application covered under this licensing program must be submitted to the appropriate Regional Administrator. The Administrators' jurisdictions and mailing addresses are listed in paragraph (b)(2) of this section.

* * * * *

(2) * * *

(i) * * * All mailed or hand-delivered inquiries, communications, and applications for a new license or an amendment or renewal of an existing license specified in paragraph (b)(1) of this section must use the following address: U.S. Nuclear Regulatory Commission, Region I, Nuclear Material Section B, 475 Allendale Road, King of Prussia, Pennsylvania 19406–1415; where e-mail is appropriate it should be addressed to *RidsRgn1MailCenter@nrc.gov.*

(ii) * * * All mailed or hand-delivered inquiries, communications, and applications for a new license or an amendment or renewal of an existing license specified in paragraph (b)(1) of this section must use the following address: U.S. Nuclear Regulatory Commission, Region II, Material Licensing/Inspection Branch, Sam Nunn Atlanta Federal Center, Suite 23T85, 61 Forsyth Street, SW., Atlanta, GA 30303–8931; where e-mail is appropriate it should be addressed to *RidsRgn2MailCenter@nrc.gov.*

(iii) * * * All mailed or hand-delivered inquiries, communications, and applications for a new license or an amendment or renewal of an existing license specified in paragraph (b)(1) of this section must use the following address: U.S. Nuclear Regulatory Commission, Region III, Material Licensing Section, 801 Warrenville Road, Lisle, Illinois 60532–4351; where e-mail is appropriate it should be addressed to *RidsRgn3MailCenter@nrc.gov.*

(iv) * * * All mailed or hand-delivered inquiries, communications, and applications for a new license or an amendment or renewal of an existing license specified in paragraph (b)(1) of this section must use the following address: U.S. Nuclear Regulatory Commission, Region IV, Material Radiation Protection Section, 611 Ryan Plaza Drive, Suite 400, Arlington, Texas 76011–4005; where e-mail is appropriate it should be addressed to *RidsRgn4MailCenter@nrc.gov.*

■ 136. In § 70.7, paragraph (e)(3) is revised to read as follows:

§ 70.7 Employee protection.

* * * * *

(e) * * *

(3) Copies of NRC Form 3 may be obtained by writing to the Regional Administrator of the appropriate U.S. Nuclear Regulatory Commission Regional Office listed in appendix D to part 20 of this chapter, by calling (301) 415-5877, via e-mail to *forms@nrc.gov,* or by accessing the NRC Web site at *http://www.nrc.gov* and selecting forms from the index found on the home page.

* * * * *

■ 137. In § 70.20b, paragraphs (f)(1), (f)(2)(ii), and (f)(2)(iii) are revised to read as follows:

§ 70.20b General license for carriers of transient shipments of formula quantities of strategic special nuclear material, special nuclear material of moderate strategic significance, special nuclear material of low strategic significance, and irradiated reactor fuel.

* * * * *

(f)(1) Persons generally licensed under this section, who plan to carry transient shipments with scheduled stops at United States ports, shall notify in writing the Director, Division of Nuclear Security, Office of Nuclear Security and Incident Response, using an appropriate method listed in § 70.5(a). Classified notifications shall be sent to the NRC headquarters classified mailing address listed in appendix A to part 73 of this chapter.

(2) * * *

(ii) The NRC Headquarters Operations Center shall be notified by telephone at least 2 days before commencement of the shipment at the numbers listed in appendix A to part 73 of this chapter. Classified notifications shall be made by secure telephone.

(iii) The NRC Headquarters Operations Center shall be notified by telephone of schedule changes greater than ±6 hours at the numbers listed in appendix A to part 73 of this chapter. Classified notifications shall be made by secure telephone.

* * * * *

■ 138. In § 70.21, paragraphs (a)(1) and (a)(2) are revised to read as follows:

§ 70.21 Filing.

(a)(1) A person may apply for a license to possess and use special nuclear material in a plutonium processing or fuel fabrication plant, or for a uranium enrichment facility license, by filing the application with the Director of the NRC's Office of Nuclear Material Safety and Safeguards in accordance with the instructions in § 70.5(a). If the application is on paper or CD–ROM, only one copy need be provided. If the application is to be submitted electronically, see guidance for electronic submissions to the Commission.

(2) A person may apply for any other license issued under this part, by filing the application in accordance with the instructions in § 70.5(a). If the application is on paper, only one copy need be provided. If the application is to be submitted electronically, see guidance for electronic submissions to the Commission.

* * * * *

■ 139. In § 70.32, the second sentence of the introductory text of paragraph (c)(2), the last sentences of paragraphs (d), (e), and (g), and the third sentence of paragraph (i) are revised to read as follows:

§ 70.32 Conditions of licenses.

* * * * *

(c) * * *

(2) * * * Licensees located in all four Regions as indicated in appendix A of part 73 of this chapter shall furnish to the Director, Division of Nuclear Security, Office of Nuclear Security and Incident Response, using an appropriate method listed in § 70.5(a), a report containing a description of each change within:

* * * * *

(d) * * * Within two months after each change, a report containing a description of the change must be furnished to the Director of the NRC's Office of Nuclear Material Safety and Safeguards, using an appropriate method listed in § 70.5(a); and a copy must be sent to the appropriate NRC Regional Office shown in appendix A to part 73 of this chapter.

(e) * * * The licensee shall maintain records of changes to the plan made without prior Commission approval, for three years from the effective date of the change, and shall, within two months after the change is made, furnish a report containing a description of each change to the Director, Division of Nuclear Security, Office of Nuclear Security and Incident Response; the report may be sent using an appropriate method listed in § 70.5(a), and a copy of the report must be sent to the appropriate NRC Regional Office shown in appendix A to part 73 of this chapter.

* * * * *

(g) * * * The licensee shall maintain each change to the plan made without prior approval as a record during the period for which possession of a formula quantity of special nuclear material is authorized under a license and retain the superseded portion for 3 years after the effective date of the change, and shall, within 60 days after the change is made, furnish a report containing a description of each change to the Director of Nuclear Material Safety and Safeguards; the report may be sent using an appropriate method listed in § 70.5(a), and a copy of the report must be sent to the Regional Administrator of the appropriate NRC Regional Office as specified in appendix A to part 73 of this chapter.

* * * * *

(i) * * * Within six months after each change is made, the licensee shall, using an appropriate method listed in § 70.5(a), furnish the Director, Division of Nuclear Security, Office of Nuclear Security and Incident Response, a copy of each change, with copies to the appropriate NRC Regional Office specified in appendix D to part 20 of this chapter and to affected offsite response organizations. * * *

* * * * *

■ 140. In § 70.50, the third sentence of the introductory text of paragraph (c)(2) is revised to read as follows:

§ 70.50 Reporting requirements.

* * * * *

(c) * * *

(2) * * * These written reports must be sent to the NRC's Document Control Desk, using an appropriate method listed in § 70.5(a), with a copy to the appropriate NRC regional office listed in appendix D to part 20 of this chapter. * * *

* * * * *

■ 141. Section 70.59 is revised to read as follows:

§ 70.59 Effluent monitoring reporting requirements.

Within 60 days after January 1 and July 1 of each year, and using an appropriate method listed in § 70.5(a), each licensee authorized to possess and use special nuclear material for processing and fuel fabrication, scrap recovery, conversion of uranium hexafluoride, or in a uranium enrichment facility shall submit a report addressed: ATTN: Document Control Desk, Director, Office of Nuclear Material Safety and Safeguards, U.S. Nuclear Regulatory Commission, Washington, DC 20555–0001, with a copy to the appropriate NRC Regional Office shown in appendix D to part 20 of this chapter. The report must specify the quantity of each of the principal radionuclides released to unrestricted areas in liquid and gaseous effluents during the previous six months of operation, and such other information as the Commission may require to estimate maximum potential annual

radiation doses to the public resulting from effluent releases. If quantities of radioactive materials released during the reporting periods are significantly above the licensee's design objectives previously reviewed as part of the licensing action, the report must cover this specifically. On the basis of these reports and any additional information the Commission may obtain from the licensee or others, the Commission may from time to time require the licensee to take such action as the Commission deems appropriate.

PART 71—PACKAGING AND TRANSPORTATION OF RADIOACTIVE MATERIAL

■ 142. The authority citation for part 71 is revised to read as follows:

Authority: Secs. 53, 57, 62, 63, 81, 161, 182, 183, 68 Stat. 930, 932, 933, 935, 948, 953, 954, as amended, sec. 1701, 106 Stat. 2951, 2952, 2953 (42 U.S.C. 2073, 2077, 2092, 2093, 2111, 2201, 2232, 2233, 2297f); secs. 201, as amended, 202, 206, 88 Stat. 1242, as amended, 1244, 1246 (42 U.S.C. 5841, 5842, 5846); sec. 1704, 112 Stat. 2750 (44 U.S.C. 3504 note).

Section 71.97 also issued under sec. 301, Pub. L. 96–295, 94 Stat. 789–790.

■ 143. In § 71.1, paragraph (a) is revised to read as follows:

§ 71.1 Communications and records.

(a) Except where otherwise specified, all communications and reports concerning the regulations in this part and applications filed under them should be sent by mail addressed: ATTN: Document Control Desk, Director, Spent Fuel Project Office, Office of Nuclear Material Safety and Safeguards, U.S. Nuclear Regulatory Commission, Washington, DC 20555–0001, by hand delivery to the NRC's offices at 11555 Rockville Pike, Rockville, Maryland; or, where practicable, by electronic submission, for example, via Electronic Information Exchange, or CD–ROM. Electronic submissions must be made in a manner that enables the NRC to receive, read, authenticate, distribute, and archive the submission, and process and retrieve it a single page at a time. Detailed guidance on making electronic submissions can be obtained by visiting the NRC's Web site at *http://www.nrc.gov/site-help/eie.html,* by calling (301) 415–6030, by e-mail to *EIE@nrc.gov,* or by writing the Office of the Chief Information Officer, U.S. Nuclear Regulatory Commission, Washington, DC 20555–0001. The guidance discusses, among other topics, the formats the NRC can accept, the use of electronic signatures, and the treatment of nonpublic information.

* * * * *

■ 144. In § 71.12, paragraph (c)(3) is revised to read as follows:

§ 71.12 General license: NRC-approved package.

* * * * *

(c) * * *

(3) Before the licensee's first use of the package, submits in writing to: ATTN: Document Control Desk, Director, Spent Fuel Project Office, Office of Nuclear Material Safety and Safeguards, using an appropriate method listed in § 71.1(a), the licensee's name and license number and the package identification number specified in the package approval.

* * * * *

■ 145. In § 71.95, the introductory text is revised to read as follows:

§ 71.95 Reports.

Using an appropriate method listed in § 71.1(a), the licensee shall report to: ATTN: Document Control Desk, Director, Spent Fuel Project Office, Office of Nuclear Material Safety and Safeguards within 30 days—

* * * * *

■ 146. In § 71.97, the introductory text of paragraph (c)(3) is revised to read as follows:

§ 71.97 Advance notification of shipment of irradiated reactor fuel and nuclear waste.

* * * * *

(c) * * *

(3) A notification delivered by any other means than mail must reach the office of the governor or of the governor's designee at least 4 days before the beginning of the 7-day period during which departure of the shipment is estimated to occur.

* * * * *

■ 147. In § 71.101, the last sentence of paragraph (c) is revised to read as follows:

§ 71.101 Quality assurance requirements.

* * * * *

(c) * * * Using an appropriate method listed in § 71.1(a), each licensee shall file a description of its quality assurance program, including a discussion of which requirements of this subpart are applicable and how they will be satisfied, by submitting the description to: ATTN: Document Control Desk, Director, Spent Fuel Project Office, Office of Nuclear Material Safety and Safeguards.

* * * * *

PART 72—LICENSING REQUIREMENTS FOR THE INDEPENDENT STORAGE OF SPENT NUCLEAR FUEL, HIGH-LEVEL RADIOACTIVE WASTE, AND REACTOR-RELATED GREATER THAN CLASS C WASTE

■ 148. The authority citation for part 72 is revised to read as follows:

Authority: Secs. 51, 53, 57, 62, 63, 65, 69, 81, 161, 182, 183, 184, 186, 187, 189, 68 Stat. 929, 930, 932, 933, 934, 935, 948, 953, 954, 955, as amended; sec. 234, 83 Stat. 444, as amended (42 U.S.C. 2071, 2073, 2077, 2092, 2093, 2095, 2099, 2111, 2201, 2232, 2233, 2234, 2236, 2237, 2238, 2282); sec. 274, Pub. L. 86–373, 73 Stat. 688, as amended (42 U.S.C. 2021); sec. 201, as amended; 202, 206, 88 Stat. 1242, as amended; 1244, 1246 (42 U.S.C. 5841, 5842, 5846); Pub. L. 95–601, sec. 10, 92 Stat. 2951, as amended by Pub. L. 102–486, sec. 7902, 106 Stat. 3123 (42 U.S.C. 5851); sec. 102, Pub. L. 91–190, 83 Stat. 853 (42 U.S.C. 4332); secs. 131, 132, 133, 135, 137, 141, Pub. L. 97–425, 96 Stat. 2229, 2230, 2232, 2241; sec. 148, Pub. L. 100–203, 101 Stat. 1330–235 (42 U.S.C. 10151, 10152, 10153, 10155, 10157, 10161, 10168); sec. 1704, 112 Stat. 2750 (44 U.S.C. 3504 note).

Section 72.44(g) also issued under secs. 142(b) and 148(c), (d), Pub. L. 100–203, 101 Stat. 1330–232, 1330–236 (42 U.S.C. 10162(b), 10168(c), (d)). Section 72.46 also issued under sec. 189, 68 Stat. 955 (42 U.S.C. 2239); sec. 134, Pub. L. 97–425, 96 Stat. 2230 (42 U.S.C. 10154). Section 72.96(d) also issued under sec. 145(g), Pub. L. 100–203, 101 Stat. 1330–235 (42 U.S.C. 10165(g)). Subpart J also issued under secs. 2(2), 2(15), 2(19), 117(a), 141(h), Pub. L. 97–425, 96 Stat. 2202, 2203, 2204, 2222, 2224 (42 U.S.C. 10101, 10137(a), 10161(h)). Subparts K and L are also issued under sec. 133, 98 Stat. 2230 (42 U.S.C. 10153) and sec. 218(a), 96 Stat. 2252 (42 U.S.C. 10198).

■ 149. Section 72.4 is revised to read as follows.

§ 72.4 Communications.

Except where otherwise specified, all communications and reports concerning the regulations in this part and applications filed under them should be sent by mail addressed: ATTN: Document Control Desk, Director, Spent Fuel Project Office, Office of Nuclear Material Safety and Safeguards, U.S. Nuclear Regulatory Commission, Washington, DC 20555–0001; by hand delivery to the NRC's offices at One White Flint North, 11555 Rockville Pike, Rockville, Maryland between 7:30 a.m. and 4:15 p.m. eastern time; or, where practicable, by electronic submission, for example, via Electronic Information Exchange, or CD–ROM. Electronic submissions must be made in a manner that enables the NRC to receive, read, authenticate, distribute, and archive the submission, and process and retrieve it a single page at a time.

Detailed guidance on making electronic submissions can be obtained by visiting the NRC's Web site at *http://www.nrc.gov/site-help/eie.html,* by calling (301) 415–6030, by e-mail to *EIE@nrc.gov,* or by writing the Office of the Chief Information Officer, U.S. Nuclear Regulatory Commission, Washington, DC 20555–0001. The guidance discusses, among other topics, the formats the NRC can accept, the use of electronic signatures, and the treatment of nonpublic information. If the submission deadline date falls on a Saturday, or Sunday, or a Federal holiday, the next Federal working day becomes the official due date.

■ 150. In § 72.10, paragraph (e)(2) is revised to read as follows:

§ 72.10 Employee protection.

* * * * *

(e) * * *

(2) Copies of NRC Form 3 may be obtained by writing to the Regional Administrator of the appropriate U.S. Nuclear Regulatory Commission Regional Office listed in appendix D to part 20 of this chapter, by calling (301) 415–5877, via e-mail to *forms@nrc.gov,* or by visiting the NRC's Web site at *http://www.nrc.gov* and selecting forms from the index found on the home page.

* * * * *

■ 151. In § 72.16, paragraphs (a) and (c) are revised to read as follows:

§ 72.16 Filing of application for specific license.

(a) *Place of filing.* Each application for a license, or amendment thereof, under this part should be filed with the Director of the NRC's Spent Fuel Project Office, Office of Nuclear Material Safety and Safeguards in accordance with § 72.4.

* * * * *

(c) *Copies of application on paper or CD–ROM.* If the application is on paper, it must be the signed original. The applicant shall maintain the capability to generate additional copies for distribution in accordance with instruction from the Director or the Director's designee.

* * * * *

■ 152. In § 72.44, the third sentence of paragraph (f) is revised to read as follows:

§ 72.44 License conditions.

* * * * *

(f) * * * Within six months after any change is made, the licensee shall submit, in accordance with § 72.4, a report containing a description of any changes made in the plan addressed to Director, Spent Fuel Project Office, Office of Nuclear Material Safety and Safeguards, U.S. Nuclear Regulatory Commission, with a copy to the appropriate NRC Regional Office shown in appendix D to part 20 of this chapter. * * *

* * * * *

■ 153. In § 72.70, paragraphs (c)(1) and (c)(2) are revised to read as follows:

§ 72.70 Safety analysis report updating.

* * * * *

(c)(1) The update of the FSAR must be filed in accordance with § 72.4. If the update is filed on paper, it should be filed on a page-replacement basis; if filed electronically, it should be filed on a full replacement basis. See Guidance for Electronic Submissions to the Commission at *http://www.nrc.gov/site-help/eie.html.*

(2) A paper update filed on a page-replacement basis must include a list that identifies the current pages of the FSAR following page replacement. If the update is filed electronically on a full replacement basis, it must include a list of changed pages.

* * * * *

■ 154. In § 72.76, the second sentence of paragraph (a) is revised to read as follows:

§ 72.76 Material status reports.

(a) * * * Copies of these instructions may be obtained either by writing the U.S. Nuclear Regulatory Commission, Division of Nuclear Security, Office of Nuclear Security and Incident Response, Washington, DC 20555–0001, by e-mail to *RidsNsirDns@nrc.gov,* or by calling (301) 415–7298. * * *

* * * * *

■ 155. In § 72.78, the second sentence of paragraph (a) is revised to read as follows:

§ 72.78 Nuclear material transfer reports.

(a) * * * Copies of these instructions may be obtained either by writing the U.S. Nuclear Regulatory Commission, Division of Nuclear Security, Office of Nuclear Security and Incident Response, Washington, DC 20555–0001, by e-mail to *RidsNsirDns@nrc.gov,* or by calling (301) 415–7298. * * *

* * * * *

■ 156. In § 72.186, the second sentence of paragraph (b) is removed and two sentences are added in its place to read as follows:

§ 72.186 Change to physical security and safeguards contingency plans.

* * * * *

(b) * * * The licensee shall maintain records of changes to any such plan made without prior approval for a period of three years from the date of the change, and shall, within two months after the change is made, submit a report addressed to Director, Spent Fuel Project Office, Office of Nuclear Material Safety and Safeguards, U.S. Nuclear Regulatory Commission, in accordance with § 72.4, containing a description of each change. A copy of the report must be sent to the Regional Administrator of the appropriate NRC Regional Office specified in appendix A to part 73 of this chapter.

■ 157. In § 72.248, paragraphs (c)(1) and (c)(2) are revised to read as follows:

§ 72.248 Safety analysis report updating.

* * * * *

(c)(1) The update of the FSAR must be filed in accordance with § 72.4. If the update is filed on paper, then it should be filed on a page-replacement basis; if filed electronically, it should be filed on a full replacement basis. *See* Guidance for Electronic Submissions to the Commission at *http://www.nrc.gov/site-help/eie.html.*

(2) A paper update filed on a page-replacement basis must include a list that identifies the current pages of the FSAR following page replacement. If the update is filed electronically on a full replacement basis, it must include a list of changed pages.

* * * * *

PART 73—PHYSICAL PROTECTION OF PLANTS AND MATERIALS

■ 158. The authority citation for part 73 is revised to read as follows:

Authority: Secs. 53, 161, 68 Stat. 930, 948, as amended, sec. 147, 94 Stat. 780 (42 U.S.C. 2073, 2167, 2201); sec. 201, as amended, 204, 88 Stat. 1242, as amended, 1245, sec. 1701, 106 Stat. 2951, 2952, 2953 (42 U.S.C. 5841, 5844, 2297f); sec. 1704, 112 Stat. 2750 (44 U.S.C. 3504 note).

Section 73.1 also issued under secs. 135, 141, Pub. L. 97–425, 96 Stat. 2232, 2241 (42 U.S.C. 10155, 10161). Section 73.37(f) also issued under sec. 301, Pub. L. 96–295, 94 Stat. 789 (42 U.S.C. 5841 note). Section 73.57 is issued under sec. 606, Pub. L. 99–399, 100 Stat. 876 (42 U.S.C. 2169).

■ 159. Section 73.4 is revised to read as follows:

§ 73.4 Communications.

Except where otherwise specified, all communications and reports concerning the regulations in this part and applications filed under them should be sent as follows:

(a) By mail addressed to: ATTN: Document Control Desk, Director, Office of Nuclear Reactor Regulation, Director, Office of Nuclear Material Safety and Safeguards, or Director, Division of

Nuclear Security, Office of Nuclear Security and Incident Response, as appropriate, U.S Nuclear Regulatory Commission, Washington, DC 20555–0001;

(b) By hand delivery to the NRC's offices at 11555 Rockville Pike, Rockville, Maryland;

(c) Where practicable, by electronic submission, for example, Electronic Information Exchange, or CD–ROM. Electronic submissions must be made in a manner that enables the NRC to receive, read, authenticate, distribute, and archive the submission, and process and retrieve it a single page at a time. Detailed guidance on making electronic submissions can be obtained by visiting the NRC's Web site at *http://www.nrc.gov/site-help/eie.html,* by calling (301) 415–6030, by e-mail to *EIE@nrc.gov*, or by writing the Office of the Chief Information Officer, U.S. Nuclear Regulatory Commission, Washington, DC 20555–0001. The guidance discusses, among other topics, the formats the NRC can accept, the use of electronic signatures, and the treatment of nonpublic information.

(d) Classified communications shall be transmitted to the NRC Headquarters' classified mailing address as specified in appendix A to part 73 of this chapter or delivered by hand in accordance with this paragraph.

■ 160. In § 73.57, paragraphs (a)(2), and (a)(3), the first and second sentences of paragraph (d)(1), the second and fourth sentences of paragraph (d)(2), the second and third sentences of paragraph (d)(3), and paragraphs (d)(4) and (f)(5) are revised to read as follows:

§ 73.57 Requirements for criminal history checks of individuals granted unescorted access to a nuclear power facility or access to Safeguards Information by power reactor licensees.

(a) * * *

(2) Each applicant for a license to operate a nuclear power reactor under part 50 of this chapter shall submit fingerprints for those individuals who have or will have access to Safeguards Information.

(3) Prior to receiving its operating license, each applicant for a license to operate a nuclear power reactor pursuant to part 50 of this chapter may submit fingerprints for those individuals who will require unescorted access to the nuclear power facility.

* * * * *

(d) * * *

(1) For the purpose of complying with this section, licensees shall, using an appropriate method listed in § 73.4, submit to the NRC's Division of Facilities and Security, Mail Stop T–6E46, one completed, legible standard fingerprint card (Form FD–258, ORIMDNRCOOOZ) or, where practicable, other fingerprint record for each individual requiring unescorted access to the nuclear power facility or access to Safeguards Information, to the Director of the NRC's Division of Facilities and Security, marked for the attention of the Division's Criminal History Check Section. Copies of these forms may be obtained by writing the Office of the Chief Information Officer, U.S. Nuclear Regulatory Commission, Washington, DC 20555–0001, by calling (301) 415–5877, or by e-mail to *forms@nrc.gov.* Guidance on what alternative formats might be practicable is referenced in § 73.4. * * *

(2) * * * Any Form FD–258 or other fingerprint record containing omissions or evident errors will be returned to the licensee for corrections. * * * The one free resubmission must have the FBI Transaction Control Number reflected on the resubmission. * * *

(3) * * * Licensees shall submit payment with the application for the processing of fingerprints through corporate check, certified check, cashier's check, money order, or electronic payment, made payable to ''U.S. NRC'' (for guidance on making electronic payments, contact the Security Branch, Division of Facilities and Security, at (301) 415–7404). The amount of the fee is the user fee for processing fingerprints submitted by the Nuclear Regulatory Commission on behalf of nuclear power plants charged by the FBI for each fingerprint card or other fingerprint record. * * *

(4) The Commission will forward to the submitting licensee all data received from the FBI as a result of the licensee's application(s) for criminal history checks, to include the FBI fingerprint record.

* * * * *

(f) * * *

(5) The licensee shall retain all fingerprint and criminal history records received from the FBI, or a copy if the individual's file has been transferred, on an individual (including data indicating no record) for 1 year after termination or denial of unescorted access to the nuclear power facility or access to Safeguards Information.

■ 161. In § 73.72, paragraphs (a)(1), (a)(4), and (a)(5) are revised to read as follows:

§ 73.72 Requirement for advance notice of shipment of formula quantities of strategic special nuclear material, special nuclear material of moderate strategic significance, or irradiated reactor fuel.

(a) * * *

(1) Notify in writing the Director, Division of Nuclear Security, Office of Nuclear Security and Incident Response, using any appropriate method listed in § 73.4. Classified notifications shall be sent to the NRC headquarters classified mailing address listed in appendix A to this part.

* * * * *

(4) The NRC Headquarters Operations Center shall be notified by telephone at least 2 days before commencement of the shipment at the phone numbers listed in appendix A to this part. Classified notifications shall be made by secure telephone.

(5) The NRC Headquarters Operations Center shall be notified by telephone of schedule changes greater than ± 6 hours at the numbers listed in appendix A to this part. Classified notifications shall be made by secure telephone.

* * * * *

■ 162. In § 73.73, paragraphs (a)(1) and (b) are revised to read as follows:

§ 73.73 Requirement for advance notice and protection of export shipments of special nuclear material of low strategic significance.

(a) * * *

(1) Notify in writing the Director, Division of Nuclear Security, Office of Nuclear Security and Incident Response, using any appropriate method listed in § 73.4;

* * * * *

(b) A licensee who needs to amend a written advance notification required by paragraph (a) of this section may notify the NRC Headquarters Operations Center by telephone at the numbers listed in appendix A to this part.

■ 163. In § 73.74, paragraphs (a)(1) and (b) are revised to read as follows:

§ 73.74 Requirement for advance notice and protection of import shipments of nuclear material from countries that are not party to the Convention on the Physical Protection of Nuclear Material.

(a) * * *

(1) Notify in writing the Director, Division of Nuclear Security, Office of Nuclear Security and Incident Response, using any appropriate method listed in § 73.4;

* * * * *

(b) A licensee who needs to amend a written advance notification required by paragraph (a) of this section may notify the NRC Headquarters Operations Center by telephone at the numbers listed in appendix A to this part.

* * * * *

■ 164. Appendix A to part 73 is revised to read as follows:

Appendix A to Part 73—U.S. Nuclear Regulatory Commission Offices and Classified Mailing Addresses

	Address	Telephone (24 hour)	E-Mail
NRC Headquarters Operations Center	USNRC, Division of Incident Response Operations, Washington, DC 20555–0001.	(301) 816–5100, (301) 951–0550, (301) 816–5151 (fax).	*H001@nrc.gov*
Region I: Connecticut, Delaware, District of Columbia, Maine, Maryland, Massachusetts, New Hampshire, New Jersey, New York, Pennsylvania, Rhode Island, and Vermont	USNRC, Region I, 475 Allendale Road, King of Prussia, PA 19406–1415.	(610) 337–5000, (800) 432–1156, TDD: (301) 415–5575.	*RidsRgn1MailCenter@nrc.gov*
Region II: Alabama, Florida, Georgia, Kentucky, Mississippi, North Carolina, Puerto Rico, South Carolina, Tennessee, Virginia, Virgin Islands, and West Virginia	USNRC, Region II, Sam Nunn Atlanta Federal Center, Suite 23T85, 61 Forsyth Street, SW, Atlanta, GA 30303–8931.	(404) 562–4400, (800) 877–8510, TDD: (301) 415–5575.	*RidsRgn2Mail Center@nrc.gov*
Region III: Illinois, Indiana, Iowa, Michigan, Minnesota, Missouri, Ohio and Wisconsin	USNRC, Region III, 801 Warrenville Road, Lisle, IL 60532–4351.	(630) 829–9500, (800) 522–3025, TDD: (301) 415–5575.	*RidsRgn3MailCenter@nrc.gov*
Region IV: Alaska, Arizona, Arkansas, California, Colorado, Hawaii, Idaho, Kansas, Louisiana, Montana, Nebraska, Nevada, New Mexico, North Dakota, Oklahoma, Oregon, South Dakota, Texas, Utah, Washington, Wyoming, and the U.S. territories and possessions in the Pacific	USNRC, Region IV, 611 Ryan Plaza Drive, Suite 400, Arlington, TX 76011–4005.	(817) 860–8100, (800) 952–9677, TDD: (301) 415–5575.	*RidsRgn4MailCenter@nrc.gov*

CLASSIFIED MAILING ADDRESSES

	Address
NRC Headquarters	U.S. NRC, Caller Box 2500, Rockville, MD 20852.
Region I	U.S. NRC, 475 Allendale Road, King of Prussia, PA 19406.
Region II	U.S. NRC, Region II, P.O. Box 2257, Atlanta, GA 30303
Region III	U.S. NRC, Region III, 801 Warrenville Road, Lisle, IL 60532–4351.
Region IV	U.S. NRC, Region IV, 611 Ryan Plaza Drive, Suite 4000, Arlington, TX 76011.

I. Classified mail shall be transmitted in accordance with § 95.39 of this chapter to the appropriate NRC classified mailing address listed in this appendix.

II. Classified documents may be hand delivered to the NRC to the appropriate NRC street address listed in this appendix. Hand delivered classified documents shall be transmitted in accordance with § 95.39 of this chapter.

PART 74—MATERIAL CONTROL AND ACCOUNTING OF SPECIAL NUCLEAR MATERIAL

■ 165. The authority citation for part 74 is revised to read as follows:

Authority: Secs. 53, 57, 161, 182, 183, 68 Stat. 930, 932, 948, 953, 954, as amended, sec. 234, 83 Stat. 444, as amended, sec. 1701, 106 Stat. 2951, 2952, 2953 (42 U.S.C. 2073, 2077, 2201, 2232, 2233, 2282, 2297f); secs. 201, as amended, 202, 206, 88 Stat. 1242, as amended, 1244, 1246 (42 U.S.C. 5841, 5842, 5846); sec. 1704, 112 Stat. 2750 (44 U.S.C. 3504 note).

■ 166. In § 74.6, paragraphs (a) and (b) are revised and paragraph (c) is added to read as follows:

§ 74.6 Communications.

* * * * *

(a) By mail addressed to: ATTN: Document Control Desk, Director of Nuclear Material Safety and Safeguards, U.S. Nuclear Regulatory Commission, Washington, DC 20555–0001.

(b) By hand delivery to the NRC's offices at 11555 Rockville Pike, Rockville, Maryland.

(c) Where practicable, by electronic submission, for example, via Electronic Information Exchange, or CD–ROM. Electronic submissions must be made in a manner that enables the NRC to receive, read, authenticate, distribute, and archive the submission, and process and retrieve it a single page at a time. Detailed guidance on making electronic submissions can be obtained by visiting the NRC's Web site at *http://www.nrc.gov/site-help/eie.html*, by calling (301) 415–6030, by e-mail to *EIE@nrc.gov*, or by writing the Office of the Chief Information Officer, U.S. Nuclear Regulatory Commission, Washington, DC 20555–0001. The guidance discusses, among other topics, the formats the NRC can accept, the use of electronic signatures, and the treatment of nonpublic information.

■ 167. In § 74.15, the third sentence in paragraph (a) is revised to read as follows:

§ 74.15 Nuclear material transfer reports.

(a) * * * Copies of these instructions (NUREG/BR–0006 and NMMSS Report D–24 ''Personal Computer Data Input for NRC Licensees'') may be obtained either by writing the U.S. Nuclear Regulatory Commission, Division of Fuel Cycle Safety and Safeguards, Washington, DC 20555–0001, by e-mail to *RidsNmssFcss@nrc.gov*, or by calling (301) 415–7213. * * *

* * * * *

■ 168. In § 74.17, the last sentences of paragraphs (a) and (b) are revised to read as follows:

§ 74.17 Special nuclear material physical inventory summary report.

(a) * * * Using an appropriate method listed in § 74.6, the licensee shall report the inventory results by plant and total facility to the Director of the NRC's Office of Nuclear Material Safety and Safeguards.

(b) * * * Using an appropriate method listed in § 74.6, the licensee shall report the inventory results by plant and total facility to the Director of the NRC's Office of Nuclear Material Safety and Safeguards.

* * * * *

■ 169. In § 74.59, paragraph (f)(1)(iii) is revised to read as follows:

§ 74.59 Quality assurance and accounting requirements.

* * * * *

(f) * * *

(1) * * *

(iii) Investigate and report, by an appropriate method listed in § 74.6, to the Director, Office of Nuclear Material Safety and Safeguards, any difference that exceeds three times the standard deviation determined from the sequential analysis;

* * * * *

PART 75—SAFEGUARDS ON NUCLEAR MATERIAL—IMPLEMENTATION OF US/IAEA AGREEMENT

■ 170. The authority citation for part 75 is revised to read as follows:

Authority: Secs. 53, 63, 103, 104, 122, 161, 68 Stat. 930, 932, 936, 937, 939, 948, as amended (42 U.S.C. 2073, 2093, 2133, 2134, 2152, 2201); sec. 201, 88 Stat. 1242, as amended (42 U.S.C. 5841); sec. 1704, 112 Stat. 2750 (44 U.S.C. 3504 note).

Section 75.4 also issued under secs. 135, 141, Pub. L. 97–425, 96 Stat. 2232, 2241 (42 U.S.C. 10155, 10161).

■ 171. In § 75.6, paragraph (c) is revised to read as follows:

§ 75.6 Maintenance of records and delivery of information, reports, and other communications.

* * * * *

(c) Except where otherwise specified, all communications and reports concerning the regulations in this part and applications filed under them should be sent by mail addressed: ATTN: Document Control Desk; Director, Office of Nuclear Reactor Regulation (or Director, Nuclear Materials Safety and Safeguards, as appropriate), U.S. Nuclear Regulatory Commission, Washington, DC 20555–0001; by hand delivery to the NRC's offices at 11555 Rockville Pike, Rockville, Maryland; or, where practicable, by electronic submission, for example, via Electronic Information Exchange, or CD–ROM. Electronic submissions must be made in a manner that enables the NRC to receive, read, authenticate, distribute, and archive the submission, and process and retrieve it a single page at a time. Detailed guidance on making electronic submissions can be obtained by visiting the NRC's Web site at *http://www.nrc.gov/site-help/eie.html*, by calling (301) 415–6030, by e-mail to *EIE@nrc.gov*, or by writing the Office of the Chief Information Officer, U.S. Nuclear Regulatory Commission, Washington, DC 20555–0001. The guidance discusses, among other topics, the formats the NRC can accept, the use of electronic signatures, and the treatment of nonpublic information.

* * * * *

PART 76—CERTIFICATION OF GASEOUS DIFFUSION PLANTS

■ 172. The authority citation for part 76 is revised to read as follows:

Authority: Sec. 161, 68 Stat. 948, as amended, secs. 1312, 1701, as amended, 106 Stat. 2932, 2951, 2952, 2953, 110 Stat. 1321–349 (42 U.S.C. 2201, 2297b–11, 2297f); secs. 201, as amended, 204, 206, 88 Stat. 1244, 1245, 1246 (42 U.S.C. 5841, 5842, 5845, 5846). Sec. 234(a), 83 Stat. 444, as amended by Pub. L. 104–134, 110 Stat. 1321, 1321–349 (42 U.S.C. 2243(a)); sec. 1704, 112 Stat. 2750 (44 U.S.C. 3504 note).

Section 76.7 also issued under Pub. L. 95–601. sec. 10, 92 Stat 2951 (42 U.S.C. 5851). Section 76.22 is also issued under sec.193(f), as amended, 104 Stat. 2835, as amended by Pub. L. 104–134, 110 Stat. 1321, 1321–349 (42 U.S.C. 2243(f)). Section 76.35(j) also issued under sec. 122, 68 Stat. 939 (42 U.S.C. 2152).

■ 173. Section 76.5 is revised to read as follows:

§ 76.5 Communications.

Except where otherwise specified, all communications and reports concerning the regulations in this part and applications filed under them should be sent as follows:

(a) By mail addressed to: ATTN: Document Control Desk, Director, Division of Nuclear Security, Office of Nuclear Security and Incident Response, U.S Nuclear Regulatory Commission, Washington, DC 20555–0001;

(b) By hand delivery to the NRC's offices at 11555 Rockville Pike, Rockville, Maryland; or

(c) Where practicable, by electronic submission, for example, Electronic Information Exchange, or CD–ROM. Electronic submissions must be made in a manner that enables the NRC to receive, read, authenticate, distribute, and archive the submission, and process and retrieve it a single page at a time. Detailed guidance on making electronic submissions can be obtained by visiting the NRC's Web site at *http://www.nrc.gov/site-help/eie.html*, by calling (301) 415–6030, by e-mail to *EIE@nrc.gov*, or by writing the Office of the Chief Information Officer, U.S. Nuclear Regulatory Commission, Washington, DC 20555–0001. The guidance discusses, among other topics, the formats the NRC can accept, the use of electronic signatures, and the treatment of nonpublic information.

(d) Classified communications shall be transmitted in accordance with § 95.39 of this chapter to the NRC Headquarters' classified mailing address listed in appendix A to part 73 of this chapter or delivered by hand in accordance with § 95.39 of this chapter to the NRC Headquarters' street address listed in appendix A to part 73 of this chapter.

■ 174. In § 76.7, paragraph (e)(3) is revised to read as follows:

§ 76.7 Employee protection.

* * * * *

(e) * * *

(3) Copies of NRC Form 3 may be obtained by writing to the NRC Region III Office listed in appendix D to part 20 of this chapter, by calling (301) 415–5877, via e-mail to *forms@nrc.gov*, or by accessing the NRC Website at *http://www.nrc.gov* and selecting forms from the index found on the home page.

* * * * *

■ 175. In § 76.33, paragraph (a)(1) is revised to read as follows:

§ 76.33 Application procedures.

(a) * * *

(1) An application for a certificate of compliance must be tendered by filing the application with the Director of the NRC's Office of Nuclear Material Safety and Safeguards, with copies sent to the NRC Region III Office and appropriate resident inspector, in accordance with § 76.5. If the application is to be submitted electronically, see Guidance for Electronic Submission to the Commission at *http://www.nrc.gov/site-help/eie.html.*

* * * * *

■ 176. In § 76.120, the third sentence of the introductory text of paragraph (d)(2) is revised to read as follows:

§ 76.120 Reporting requirements.

* * * * *

(d) * * *

(2) * * * These written reports must be sent to the NRC by an appropriate method listed in § 76.5. * * *

* * * * *

PART 81—STANDARD SPECIFICATIONS FOR THE GRANTING OF PATENT LICENSES

■ 177. The authority citation for part 81 is revised to read as follows:

Authority: Sec. 156, 161, 68 Stat. 947, 948, as amended (42 U.S.C. 2186, 2201); sec. 201, 88 Stat. 1242, as amended (42 U.S.C. 5841); sec. 1704, 112 Stat. 2750 (44 U.S.C. 3504 note).

■ 178. Section 81.3 is revised to read as follows:

§ 81.3 Communications.

All communications concerning the regulations in this part, including applications for licenses, should be sent to the NRC either by mail addressed to the U.S. Nuclear Regulatory Commission, Washington, DC 20555–0001; by hand delivery to the NRC's offices at 11555 Rockville Pike, Rockville, Maryland; or, where practicable, by electronic submission, for example, via Electronic Information Exchange, or CD–ROM. Electronic submissions must be made in a manner that enables the NRC to receive, read, authenticate, distribute, and archive the submission, and process and retrieve it a single page at a time. Detailed guidance on making electronic submissions can be obtained by visiting the NRC's Web site at *http://www.nrc.gov/site-help/eie.html*, by calling (301) 415–6030, by e-mail to *EIE@nrc.gov*, or by writing the Office of the Chief Information Officer, U.S. Nuclear Regulatory Commission, Washington, DC 20555–0001. The guidance discusses, among other topics, the formats the NRC can accept, the use of electronic signatures, and the treatment of nonpublic information.

PART 95—FACILITY SECURITY CLEARANCE AND SAFEGUARDING OF NATIONAL SECURITY INFORMATION AND RESTRICTED DATA

■ 179. The authority citation for part 95 is revised to read as follows:

Authority: Secs. 145, 161, 193, 68 Stat. 942, 948, as amended (42 U.S.C. 2165, 2201); sec. 201, 88 Stat. 1242, as amended (42 U.S.C. 5841); sec. 1704, 112 Stat. 2750 (44 U.S.C. 3504 note); E.O. 10865, as amended, 3 CFR 1959–1963 Comp., p. 398 (50 U.S.C. 401, note); E.O. 12829, 3 CFR, 1993 Comp., p. 570; E.O. 12958, as amended, 3 CFR, 1995 Comp., p. 333; E.O. 12968, 3 CFR, 1995 Comp., p. 391.

■ 180. Section 95.9 is revised to read as follows:

§ 95.9 Communications.

Except where otherwise specified, all communications and reports concerning the regulations in this part should be submitted as follows:

(a) By mail addressed to: ATTN: Document Control Desk, Director, Division of Nuclear Security, Office of Nuclear Security and Incident Response, U.S Nuclear Regulatory Commission, Washington, DC 20555–0001;

(b) By hand delivery to the NRC's offices at 11555 Rockville Pike, Rockville, Maryland; or

(c) Where practicable, by electronic submission, for example, Electronic Information Exchange, or CD–ROM. Electronic submissions must be made in a manner that enables the NRC to receive, read, authenticate, distribute, and archive the submission, and process and retrieve it a single page at a time. Detailed guidance on making electronic submissions can be obtained by visiting the NRC's Web site at *http://www.nrc.gov/site-help/eie.html*, by calling (301) 415–6030, by e-mail to *EIE@nrc.gov*, or by writing the Office of the Chief Information Officer, U.S. Nuclear Regulatory Commission, Washington, DC 20555–0001. The guidance discusses, among other topics, the formats the NRC can accept, the use of electronic signatures, and the treatment of nonpublic information.

(d) Classified communications shall be transmitted in accordance with § 95.39 of this chapter to the NRC Headquarters' classified mailing address listed in appendix A to part 73 of this chapter or delivered by hand in accordance with § 95.39 of this chapter to the NRC Headquarters' street address listed in appendix A to part 73 of this chapter.

■ 181. In § 95.19, the second sentence of the introductory text of paragraph (a) is revised to read as follows:

§ 95.19 Changes to security practices and procedures.

(a) * * * A written description of the proposed change must be furnished to the CSA and the NRC Regional Administrator of the cognizant Regional Office listed in appendix A to part 73 of this chapter, and, if the NRC is not the CSA, also to the Director, Division of Nuclear Security, Office of Nuclear Security and Incident Response; the communications to NRC personnel should be by an appropriate method listed in § 95.9. * * *

* * * * *

■ 182. In § 95.45, the second sentence of paragraph (a) is revised to read as follows:

§ 95.45 Changes in classification.

(a) * * * Requests for downgrading or declassifying any NRC classified information should be forwarded to the NRC's Division of Nuclear Security, Nuclear Security and Incident Response, using an appropriate method listed in § 95.9. * * *

* * * * *

PART 100—REACTOR SITE CRITERIA

■ 183. The authority citation for part 100 is revised to read as follows:

Authority: Secs. 103, 104, 161, 182, 68 Stat. 936, 937, 948, 953, as amended (42 U.S.C. 2133, 2134, 2201, 2232); sec. 201, as amended, 202, 88 Stat. 1242, as amended, 1244 (42 U.S.C. 5841, 5842); sec. 1704, 112 Stat. 2750 (44 U.S.C. 3504 note).

■ 184. Section 100.4 is revised to read as follows:

§ 100.4 Communications.

Except where otherwise specified, all communications and reports concerning the regulations in this part and applications filed under them should be sent by mail addressed to: ATTN: Document Control Desk, Director, Office of Nuclear Reactor Regulation, U.S. Nuclear Regulatory Commission, Washington, DC 20555–0001; by hand delivery to the NRC's offices at 11555 Rockville Pike, Rockville, Maryland; or, where practicable, by electronic submission, for example, via Electronic Information Exchange, or CD–ROM. Electronic submissions must be made in a manner that enables the NRC to receive, read, authenticate, distribute, and archive the submission, and process and retrieve it a single page at a time. Detailed guidance on making electronic submissions can be obtained by visiting the NRC's Web site at *http://www.nrc.gov/site-help/eie.html*, by calling (301) 415–6030, by e-mail to *EIE@nrc.gov*, or by writing the Office of the Chief Information Officer, U.S. Nuclear Regulatory Commission, Washington, DC 20555–0001. The guidance discusses, among other topics, the formats the NRC can accept, the use of electronic signatures, and the treatment of nonpublic information. Copies should be sent to the appropriate Regional Office and Resident Inspector.

PART 110—EXPORT AND IMPORT OF NUCLEAR EQUIPMENT AND MATERIAL

■ 185. The authority citation for part 110 is revised to read as follows:

Authority: Secs. 51, 53, 54, 57, 63, 64, 65, 81, 82, 103, 104, 109, 111, 126, 127, 128, 129, 161, 181, 182, 183, 187, 189, 68 Stat. 929, 930, 931, 932, 933, 936, 937, 948, 953, 954, 955, 956, as amended (42 U.S.C. 2071, 2073, 2074, 2077, 2092–2095, 2111, 2112, 2133, 2134, 2139, 2139a, 2141, 2154–2158, 2201, 2231–2233, 2237, 2239); sec. 201, 88 Stat. 1242, as amended (42 U.S.C. 5841); sec. 5, Pub. L. 101–575, 104 Stat. 2835 (42 U.S.C. 2243); sec. 1704, 112 Stat. 2750 (44 U.S.C. 3504 note).

Sections 110.1(b)(2) and 110.1(b)(3) also issued under Pub. L. 96–92, 93 Stat. 710 (22 U.S.C. 2403). Section 110.11 also issued

under sec. 122, 68 Stat. 939 (42 U.S.C. 2152) and secs. 54c and 57d, 88 Stat. 473, 475 (42 U.S.C. 2074). Section 110.27 also issued under sec. 309(a), Pub. L. 99–440. Section 110.50(b)(3) also issued under sec. 123, 92 Stat. 142 (42 U.S.C. 2153). Section 110.51 also issued under sec. 184, 68 Stat. 954, as amended (42 U.S.C. 2234). Section 110.52 also issued under sec. 186, 68 Stat. 955 (42 U.S.C. 2236). Sections 110.80–110.113 also issued under 5 U.S.C. 552, 554. Sections 110.130–110.135 also issued under 5 U.S.C. 553. Sections 110.2 and 110.42(a)(9) also issued under sec. 903, Pub. L. 102–496 (42 U.S.C. 2151 *et seq.*).

■ 186. Section 110.4 is revised to read as follows:

§ 110.4 Communications.

Except where otherwise specified in this part, all communications and reports concerning the regulations in this part should be addressed to the Deputy Director of the NRC's Office of International Programs, either by telephone to (301) 415–2344; by mail to the U.S. Nuclear Regulatory Commission, Washington, DC 20555–0001; by hand delivery to the NRC's offices at 11555 Rockville Pike, Rockville, Maryland; or, where practicable, by electronic submission, for example, via Electronic Information Exchange, or CD–ROM. Electronic submissions must be made in a manner that enables the NRC to receive, read, authenticate, distribute, and archive the submission, and process and retrieve it a single page at a time. Detailed guidance on making electronic submissions can be obtained by visiting the NRC's Web site at *http://www.nrc.gov/site-help/eie.html*, by calling (301) 415–6030, by e-mail to *EIE@nrc.gov*, or by writing the Office of the Chief Information Officer, U.S. Nuclear Regulatory Commission, Washington, DC 20555–0001. The guidance discusses, among other topics, the formats the NRC can accept, the use of electronic signatures, and the treatment of nonpublic information.

■ 187. In § 110.31, paragraph (a) is revised to read as follows:

§ 110.31 Application for a specific license.

(a) A person shall file an application for a specific license to export or import with the Deputy Director of the NRC's Office of International Programs, using an appropriate method listed in § 110.4.

* * * * *

■ 188. In § 110.131, paragraph (a) is revised to read as follows:

§ 110.131 Petition for rulemaking.

(a) A petition for rulemaking should be addressed to the Secretary of the Commission, for the attention of the Secretary's Rulemakings and Adjudications Staff. The petition should be sent using an appropriate method listed in § 110.4.

* * * * *

PART 140—FINANCIAL PROTECTION REQUIREMENTS AND INDEMNITY AGREEMENTS

■ 189. The authority citation for part 140 is revised to read as follows:

Authority: Secs. 161, 170, 68 Stat. 948, 71 Stat. 576, as amended (42 U.S.C. 2201, 2210); secs. 201, as amended, 202, 88 Stat. 1242, as amended, 1244 (42 U.S.C. 5841, 5842); sec. 1704, 112 Stat. 2750 (44 U.S.C. 3504 note).

■ 190. § 140.5 is revised to read as follows:

§ 140.5 Communications.

Except where otherwise specified, all communications and reports concerning the regulations in this part and applications filed under them should be sent by mail addressed to: ATTN: Document Control Desk, Director, Office of Nuclear Reactor Regulation (or Director, Office of Nuclear Material Safety and Safeguards, as appropriate), U.S. Nuclear Regulatory Commission, Washington, DC 20555–0001; by hand delivery to the NRC's offices at 11555 Rockville Pike, Rockville, Maryland; or, where practicable, by electronic submission, for example, via Electronic Information Exchange, or CD–ROM. Electronic submissions must be made in a manner that enables the NRC to receive, read, authenticate, distribute, and archive the submission, and process and retrieve it a single page at a time. Detailed guidance on making electronic submissions can be obtained by visiting the NRC's Web site at *http://www.nrc.gov/site-help/eie.html*, by calling (301) 415–6030, by e-mail to *EIE@nrc.gov*, or by writing the Office of the Chief Information Officer, U.S. Nuclear Regulatory Commission, Washington, DC 20555–0001. The guidance discusses, among other topics, the formats the NRC can accept, the use of electronic signatures, and the treatment of nonpublic information.

■ 191. In § 140.6, the first sentence of paragraph (a) is revised to read as follows:

§ 140.6 Reports.

(a) In the event of bodily injury or property damage arising out of or in connection with the possession or use of the radioactive material at the location or in the course of transportation, or in the event any claim is made therefor, written notice containing particulars sufficient to identify the licensee and reasonably obtainable information with respect to the time, place, and circumstances thereof, or to the nature of the claim, shall be furnished by or for the licensee to the Director of the Office of Nuclear Reactor Regulation, or the Director of the Office of Nuclear Material Safety and Safeguards, as appropriate, using an appropriate method listed in § 140.5, but in any case as promptly as practicable. * * *

* * * * *

PART 150—EXEMPTIONS AND CONTINUED REGULATORY AUTHORITY IN AGREEMENT STATES AND IN OFFSHORE WATERS UNDER SECTION 274

■ 192. The authority citation for part 150 is revised to read as follows:

Authority: Sec. 161, 68 Stat. 948, as amended, sec. 274, 73 Stat. 688 (42 U.S.C. 2201, 2021); sec. 201, 88 Stat. 1242, as amended (42 U.S.C. 5841); sec. 1704, 112 Stat. 2750 (44 U.S.C. 3504 note).

Sections 150.3, 150.15, 150.15a, 150.31, 150.32 also issued under secs. 11e(2), 81, 68 Stat. 923, 935, as amended, secs. 83, 84, 92 Stat. 3033, 3039 (42 U.S.C. 2014e(2), 2111, 2113, 2114). Section 150.14 also issued under sec. 53, 68 Stat. 930, as amended (42 U.S.C. 2073). Section 150.15 also issued under secs. 135, 141, Pub. L. 97–425, 96 Stat. 2232, 2241 (42 U.S.C. 10155, 10161). Section 150.17a also issued under sec. 122, 68 Stat. 939 (42 U.S.C. 2152). Section 150.30 also issued under sec. 234, 83 Stat. 444 (42 U.S.C. 2282).

■ 193. Section 150.4 is revised to read as follows:

§ 150.4 Communications.

Except where otherwise specified in this part, all communications and reports concerning the regulations in this part should be sent by mail addressed: ATTN: Document Control Desk, Director, Office of Nuclear Material Safety and Safeguards, and sent either by mail to the U.S. Nuclear Regulatory Commission, Washington, DC 20555–0001; by hand delivery to the NRC's offices at 11555 Rockville Pike, Rockville, Maryland; or, where practicable, by electronic submission, for example, via Electronic Information Exchange, or CD–ROM. Electronic submissions must be made in a manner that enables the NRC to receive, read, authenticate, distribute, and archive the submission, and process and retrieve it a single page at a time. Detailed guidance on making electronic submissions can be obtained by visiting the NRC's Web site at *http://www.nrc.gov/site-help/eie.html*, by calling (301) 415–6030, by e-mail to *EIE@nrc.gov*, or by writing the Office of the Chief Information Officer, U.S. Nuclear Regulatory Commission, Washington, DC 20555–0001. The guidance discusses, among other topics,

the formats the NRC can accept, the use of electronic signatures, and the treatment of nonpublic information.

■ 194. In § 150.16, the fourth sentence of paragraph (a) and paragraph (b)(2) are revised to read as follows:

§ 150.16 Submission to Commission of nuclear material transfer reports.

(a) * * * Copies of these instructions may be obtained either by writing the U.S. Nuclear Regulatory Commission, Division of Fuel Cycle Safety and Safeguards, Washington, DC 20555–0001, by e-mail to *RidsNmssFcss@nrc.gov*, or by calling (301) 415–7213. * * *

(b) * * *

(2) Within 15 days, the licensee shall follow the initial report with a written report that sets forth the details of the incident. The report must be sent by an appropriate method listed in § 150.4 of this part to the Director of the NRC's Office of Nuclear Material Safety and Safeguards, with a copy to the appropriate NRC Regional Office, shown in appendix A to part 73 of this chapter.

* * * * *

■ 195. In § 150.17, the second sentence of paragraph (a), the last sentence of paragraph (b), and paragraph (c) are revised to read as follows:

§ 150.17 Submission to Commission of source material transfer reports.

(a) * * * Copies of the instructions may be obtained either by writing the U.S. Nuclear Regulatory Commission, Division of Nuclear Security, Office of Nuclear Security and Incident Response, Washington, DC 20555–0001, by e-mail to *RidsNsirDns@nrc.gov*, or by calling (301) 415–6828. * * *

(b) * * * Copies of the reporting instructions may be obtained by writing the U.S. Nuclear Regulatory Commission, Division of Nuclear Security, Office of Nuclear Security and Incident Response, Washington, DC 20555–0001, by e-mail to *RidsNsirDns@nrc.gov*, or by calling (301) 415–6828.

(c)(1) Except as specified in paragraph (d) of this section, each licensee who is authorized to possess uranium or thorium pursuant to a specific license shall notify the NRC Headquarters Operations Center by telephone, at the numbers listed in appendix A to part 73 of this chapter, of any incident in which an attempt has been made or is believed to have been made to commit a theft or unlawful diversion of more than 6.8 kilograms (kg) [15 pounds] of such material at any one time or more than 68 kg [150 pounds] of such material in any one calendar year.

(2) The licensee shall notify the NRC as soon as possible, but within 4 hours, of discovery of any incident in which an attempt has been made or is believed to have been made to commit a theft or unlawful diversion of such material.

(3) The initial notification shall be followed within a period of sixty (60) days by a written followup notification submitted in accordance with § 150.4. A copy of the written followup notification shall also be sent to the appropriate NRC Regional Office as shown in appendix A to part 73 of this chapter and to Director, Division of Nuclear Security, Office of Nuclear Security and Incident Response, U.S. Nuclear Regulatory Commission.

(4) Subsequent to the submission of the written followup notification required by this paragraph, the licensee shall promptly update the written followup notification, in accordance with this paragraph, with any substantive additional information, which becomes available to the licensee, concerning an attempted or apparent theft or unlawful diversion of source material.

* * * * *

■ 196. In § 150.19, the second and third sentences of paragraph (c) are revised to read as follows:

§ 150.19 Submission to Commission of tritium reports.

* * * * *

(c) * * * The initial report must be followed within a period of fifteen days by a written report that sets forth the details of the incident and its consequences. The report must be submitted to the Director, Office of Nuclear Material Safety and Safeguards, using an appropriate method listed in § 150.4, with a copy to the appropriate NRC Regional Office as shown in appendix A to part 73 of this chapter. * * *

* * * * *

■ 197. In § 150.20, the first sentence of the introductory text of paragraph (b)(1) and paragraph (b)(1)(iii) are revised to read as follows:

§ 150.20 Recognition of Agreement State licenses.

* * * * *

(b) * * *

(1) Shall, at least 3 days before engaging in each activity for the first time in a calendar year, file a submittal containing an NRC Form 241, ''Report of Proposed Activities in Non-Agreement States,'' a copy of its Agreement State specific license, and the appropriate fee as prescribed in § 170.31 of this chapter with the Regional Administrator of the U.S. Nuclear Regulatory Commission Regional Office listed on the NRC Form 241 and in appendix D to part 20 of this chapter for the Region in which the Agreement State that issued the license is located. * * *

* * * * *

(iii) Within 3 days after the notification, files an NRC Form 241, a copy of the Agreement State license, and the fee payment.

* * * * *

PART 170—FEES FOR FACILITIES, MATERIALS, IMPORT AND EXPORT LICENSES AND OTHER REGULATORY SERVICES UNDER THE ATOMIC ENERGY ACT OF 1954, AS AMENDED

■ 198. The authority citation for part 170 is revised to read as follows:

Authority: sec. 9701, Pub. L. 97–258, 96 Stat. 1051 (31 U.S.C. 9701); sec. 301, Pub. L. 92–314, 86 Stat. 227 (42 U.S.C. 2201w); sec. 201, Pub. L. 93–438, 88 Stat. 1242, as amended (42 U.S.C. 5841); sec. 205a, Pub. L. 101–576, 104 Stat. 2842, as amended (31 U.S.C. 901, 902); sec. 1704, 112 Stat. 2750 (44 U.S.C. 3504 note).

■ 199. Section 170.5 is revised to read as follows:

§ 170.5 Communications.

All communications concerning the regulations in this part should be addressed to the NRC's Chief Financial Officer, either by mail to the U.S. Nuclear Regulatory Commission, Washington, DC 20555–0001; by hand delivery to the NRC's offices at 11555 Rockville Pike, Rockville, Maryland; or, where practicable, by electronic submission, for example, via Electronic Information Exchange, or CD–ROM. Electronic submissions must be made in a manner that enables the NRC to receive, read, authenticate, distribute, and archive the submission, and process and retrieve it a single page at a time. Detailed guidance on making electronic submissions can be obtained by visiting the NRC's Web site at *http://www.nrc.gov/site-help/eie.html*, by calling (301) 415–6030, by e-mail to *EIE@nrc.gov*, or by writing the Office of the Chief Information Officer, U.S. Nuclear Regulatory Commission, Washington, DC 20555–0001. The guidance discusses, among other topics, the formats the NRC can accept, the use of electronic signatures, and the treatment of nonpublic information.

PART 171—ANNUAL FEES FOR REACTOR LICENSES AND FUEL CYCLE LICENSES AND MATERIALS LICENSES, INCLUDING HOLDERS OF CERTIFICATES OF COMPLIANCE, REGISTRATIONS, AND QUALITY ASSURANCE PROGRAM APPROVALS AND GOVERNMENT AGENCIES LICENSED BY THE NRC

■ 200. The authority citation for part 171 is revised to read as follows:

Authority: Sec. 7601, Pub. L. 99–272, 100 Stat. 146, as amended by sec. 5601, Pub. L. 100–203, 101 Stat. 1330, as amended by sec. 3201, Pub. L. 101–239, 103 Stat. 2132, as amended by sec. 6101, Pub. L. 101–508, 104 Stat. 1388, as amended by sec. 2903a, Pub. L. 102–486, 106 Stat. 3125 (42 U.S.C. 2213, 2214); sec. 301, Pub. L. 92–314, 86 Stat. 227 (42 U.S.C. 2201w); sec. 201, Pub. L. 93–438, 88 Stat. 1242, as amended (42 U.S.C. 5841); sec. 1704, 112 Stat. 2750 (44 U.S.C. 3504 note).

■ 201. Section 171.9 is revised to read as follows:

§ 171.9 Communications.

All communications concerning the regulations in this part should be addressed to the NRC's Chief Financial Officer, either by mail to the U.S. Nuclear Regulatory Commission, Washington, DC 20555–0001; by hand delivery to the NRC's offices at 11555 Rockville Pike, Rockville, Maryland; or, where practicable, by electronic submission, for example, via Electronic Information Exchange, or CD–ROM. Electronic submissions must be made in a manner that enables the NRC to receive, read, authenticate, distribute, and archive the submission, and process and retrieve it a single page at a time. Detailed guidance on making electronic submissions can be obtained by visiting the NRC's Web site at *http://www.nrc.gov/site-help/eie.html*, by calling (301) 415–6030, by e-mail to *EIE@nrc.gov*, or by writing the Office of the Chief Information Officer, U.S. Nuclear Regulatory Commission, Washington, DC 20555–0001. The guidance discusses, among other topics, the formats the NRC can accept, the use of electronic signatures, and the treatment of nonpublic information.

Dated at Rockville, Maryland, this 30th day of September, 2003.

For the Nuclear Regulatory Commission.

Annette Vietti-Cook,

Secretary of the Commission.

Note: This appendix will not appear in the Code of Federal Regulations.

Appendix A—United States Nuclear Regulatory Commission (NRC) Guidance for Electronic Submissions to the Commission

Index

1.0 Introduction
1.1 Background
1.2 Scope
1.3 Applicable Transactions
1.3.1 Exceptions to Electronic Submission
1.3.2 Electronic Forms and Payments
1.3.3 Submissions Requiring Oath or Affirmation
1.3.4 10 CFR Part 2 Submissions
1.3.5 Freedom of Information Act and Privacy Act Requests
2.0 Parameters for Electronic Files Submitted to the NRC
2.1 File Formats
2.2 Naming Conventions
2.3 File Size Limitations
2.4 Security/Access Settings
2.5 Resolution
2.6 Settings for Creating PDF Formatted Text and Graphic Files
2.7 Use of Color
2.8 Files with Special Printing Requirements
2.9 File Linkages
2.10 Viruses
2.11 Macros
2.12 Copyrighted information
2.13 Copies
2.14 Segmentation of Large Documents
2.15 Sensitive or Non-Public Documents
3.0 Guidance for EIE Submissions
3.1 Who Can Participate
3.2 What Can Be Submitted
3.3 How to Register
3.4 What is Needed to Participate
3.5 How to Obtain a Digital Signature Certificate
3.6 How to Obtain Software Plug-ins
3.7 How to Submit Documents
3.8 Where to Submit Documents
3.9 Sensitive or Non-Public Documents
3.10 Additional User Assistance (references and contact information)
4.0 Guidance for CD–ROM Submissions
4.1 Who Can Participate
4.2 What Can be Submitted
4.3 How to Submit CD–ROMs to the NRC
4.3.1 Sensitive or Non-Public Documents
4.3.2 Oath or Affirmation
4.3.3 Living Documents
4.3.4 CD–ROM File Format
4.3.5 Packaging/Labeling
4.3.6 Copies
4.3.7 Rejection of Submissions
4.4 Where to Submit the CD–ROMs
4.5 Additional User Assistance (references and contact information)
5.0 E-mail Submissions
5.1 Who Can Participate
5.2 What Can be Submitted
5.3 Rejection of Submissions
5.4 How to Send E-mail
5.5 Where to Submit E-mail
6.0 Facsimile Submissions
6.1 Who Can Participate
6.2 What Can be Submitted
6.3 How to Send Facsimiles (Faxes)
6.4 Where to Submit Facsimiles (Faxes)
6.5 Facsimile Locations and User Assistance
7.0 Additional Resources
7.1 User Assistance
7.2 References

1.0 Introduction

1.1 Background

On October 10, 2003, the Nuclear Regulatory Commission (NRC) promulgated a final rule on electronic submission of information to the agency. This rule modified many NRC regulations to explicitly authorize electronic communications with the agency. The final rule stated that the NRC would issue specific guidance on acceptable procedures for electronic submissions. That guidance is contained in this document. This guidance document is the controlling source of information on electronic submissions to the NRC and supersedes *NRC Regulatory Issue Summary 2001–05, Guidance on Submitting Documents to the NRC by Electronic Information Exchange or on CD–ROM,* and the August 10, 2001, letter issued to certain fuel cycle facilities extending to them the option of electronic submissions in many instances. The NRC plans to update this guidance periodically to reflect changes in technology and agency experience by posting the latest version of the document on NRC's Web site at *http://www.nrc.gov*. While the Commission encourages the submission of electronic documents, submission of paper documents remains acceptable.

1.2 Scope

This guidance document governs the electronic submission of documents to the NRC. It includes the required procedures for corresponding electronically with the NRC via the Internet using Electronic Information Exchange (EIE), by CD–ROM, or by e-mail. It also includes procedures for corresponding by facsimile (fax). It does not address outgoing NRC communications.

NRC's Electronic Information Exchange (EIE) allows NRC to exchange information related to official agency business with its customers and other Federal agencies across the Internet. The EIE system uses a public key infrastructure and digital signaturing technology to authenticate documents and validate the identity of the person submitting the information. That is, the system ensures that the exchanged information is secure and that the person submitting the material is, in fact, who is indicated. It requires the use of digital signatures and certain software plug-ins. Procedures for acquiring a digital signature for communicating with the NRC via EIE can be found at Section 3.5, and procedures for acquiring the required software can be found at Section 3.6.

The NRC has enhanced its EIE system capabilities with a robust engine for facilitating the transmission process. The NRC encourages its user community to use EIE and evaluate its enhanced capabilities.

1.3 Applicable Transactions

Documents or other information submitted under oath or affirmation, or other documents where secure transfer is either required or appropriate, should be submitted over the Internet using EIE or submitted on CD–ROM. While e-mail and facsimiles are not appropriate for most submissions

required by NRC regulations, they may be used for certain other correspondence and communications with the NRC, such as rulemaking petitions and comments on rulemaking proceedings, communications with States and other Federal agencies, requests for enforcement actions under 10 CFR 2.206, and Freedom of Information Act (FOIA) requests and appeals, but not for information covered under the Privacy Act.

E-mail may be addressed to either specific individuals named as contacts in **Federal Register** Notices or other agency communications, or to the office specified in the regulation or communication specific to the document(s) being submitted; to addresses the NRC Web site provides for individual program offices or specific agency functions or services; or to the Office of Public Affairs. Individual program offices may be contacted through the NRC Web site at *http://www.nrc.gov* by selecting specific contact pages from ''Contact Us'' on the home page. The Office of Public Affairs may be reached through the ''Contact Us'' on the home page or at *OPA@nrc.gov* (use upper case where indicated). The sender will not receive an e-mail confirmation of receipt of the submission except for those communications using EIE.

1.3.1 Exceptions to Electronic Submission

A. All communications with the NRC may be submitted electronically via the Internet using Electronic Information Exchange except for the following:

1. Classified Information (*i.e.*, National Security Information and Restricted Data), and Safeguards Information. This information may only be submitted electronically on CD–ROM.

2. ''Immediate'' or ''prompt'' notifications to the NRC that NRC regulations require be made by telephone or telefax up to one week before or after an event (*e.g.*, 10 CFR 30.50 or 30.55(c)).

3. Notice of filing of bankruptcy petition, whether voluntary or involuntary (*e.g.*, 10 CFR 30.34(h)(1)).

4. Hearing requests, and documents pertaining to hearings or associated appeals, including, but not limited to, those associated with hearings conducted under 10 CFR parts 2, 4, 10, 12, 13, 14, 16, 19, 25, 76, 81, 110, 140, and 150. Separate rules or guidance addressing procedures for electronic communications in hearings will be issued in the future for public comment. (Nothing in this guidance document precludes presiding officers from their current practice of authorizing electronic communications on a case-by-case basis.)

5. Documents served on the NRC as a participant in Federal Court proceedings or in non-NRC administrative proceedings (such as administrative proceedings before the Merit Systems Protection Board, unless electronic submission is authorized by rule or order issued by a Federal Court or Agency).

6. NRC contractor proposals or invoices submitted in response to specific contractual requirements. (Because Federal Acquisition Regulation guidance as contained in Section 30 of the Office of Federal Procurement Policy Act [41 U.S.C. 426] allows the Federal Government to use electronic commerce whenever practical, guidance for electronic submittal of proposals and invoices will be addressed in individual procurements. Further guidance for submission of these documents will be issued at a later date.)

7. Financial assurance instruments to meet decommissioning cost requirements and prescribed by regulation at 10 CFR 30.35(e) and (f); 10 CFR 40.36(d) and (e); and 10 CFR 70.25(e) and (f) (including surety bonds, letters of credit, lines of credit, and insurance).

8. Documents with special printing requirements. (*See* section 2.8). This information may only be submitted electronically on CD–ROM.

9. Segmented documents or files larger than 50 megabytes (MB). (*See* section 2.14.) This information may only be submitted electronically on CD–ROM.

B. All communications with the NRC may be submitted electronically on CD–ROM except for the following:

1. ''Immediate'' or ''prompt'' notifications to the NRC that NRC regulations require be made by telephone or telefax up to one week before or after an event (*e.g.*, 10 CFR 30.50 or 30.55(c)).

2. Notice of filing of bankruptcy petition, whether voluntary or involuntary (*e.g.*, 10 CFR 30.34(h)(1)).

3. Hearing requests, and documents pertaining to hearings or associated appeals, including, but not limited to, those associated with hearings conducted under 10 CFR parts 2, 4, 10, 12, 13, 14, 16, 19, 25, 76, 81, 110, 140, and 150. Separate rules or guidance addressing procedures for electronic communications in hearings will be issued in the future for public comment. (Nothing in this guidance document precludes presiding officers from their current practice of authorizing electronic communications on a case-by-case basis.)

4. Documents served on the NRC as a participant in Federal Court proceedings or in non-NRC administrative proceedings (such as administrative proceedings before the Merit Systems Protection Board, unless electronic submission is authorized by rule or order issued by a Federal Court or Agency).

5. NRC contractor proposals or invoices submitted in response to specific contractual requirements. (Because Federal Acquisition Regulation guidance as contained in section 30 of the Office of Federal Procurement Policy Act [41 U.S.C. 426] allows the Federal Government to use electronic commerce whenever practical, guidance for electronic submittal of proposals and invoices will be addressed in individual procurements. Further guidance for submission of these documents will be issued at a later date.)

6. Financial assurance instruments to meet decommissioning cost requirements and prescribed by regulation at 10 CFR 30.35(e) and (f); 10 CFR 40.36(d) and (e); and 10 CFR 70.25(e) and (f) (including surety bonds, letters of credit, lines of credit, and insurance).

1.3.2 Electronic Forms and Payments

Each for m referred to in the NRC regulations can be found on the NRC Web site at *http://www.nrc.gov* in PDF format for viewing and printing by selecting ''Forms'' from the index found on the home page and selecting the specific form required.

Financial payments required by regulations can be submitted electronically. Copies of NRC Form 628 to establish financial authorization electronically can be found at the NRC Web site at *http://www.nrc.gov* by selecting ''Forms'' from the index found on the home page. Payments by credit card of civil penalties, part 171 annual fees, part 170 licensing and inspection fees, and other fees, may be done by completing the authorization form included with the invoice or civil penalty. A copy of the form may be printed from the NRC Web site at *http://www.nrc.gov* by selecting ''Forms'' from the index found on the home page and selecting ''NRC Form 629, Authorization for Payment by Credit Card.''

1.3.3 Submissions Requiring Oath or Affirmation

Submissions requiring oath or affirmation may be submitted electronically using EIE or on CD–ROM. (*See* sections 3.7 and 4.3.2 of this guidance document.) These include the following:

1. Documents that by statute must be submitted under oath or affirmation (*e.g.*, pursuant to section 182 of the Atomic Energy Act of 1954, as amended, 42 U.S.C. 2232). Generally, oath or affirmation requirements apply to applications for a license, amendments to a license, some licensee responses to Notices of Violation (NOV), and certain letters of transmittal. NRC's regulations in 10 CFR parts 2 and 50 implement these statutory requirements; certain regulations require an oath or affirmation for submission of documents (*see, e.g.*, 10 CFR 50.54(f) and 10 CFR 50.30(b)).

2. Documents that must be sent by certified mail (*e.g.*, 10 CFR part 30, appendix A II. C. 2).

1.3.4 10 CFR Part 2 Submissions

Rulemaking petitions, comments filed in rulemaking proceedings (10 CFR part 2, subpart H), and requests for enforcement action under 10 CFR 2.206 may be submitted via EIE, CD–ROM, or e-mail. Other documents submitted pursuant to 10 CFR part 2, subpart B, ''Procedure for Imposing Requirements By Order, or for Modification, Suspension, or Revocation of a License, or for Imposing Civil Penalties,'' may be submitted via EIE or CD–ROM. Submission of all other documents covered under part 2 are excluded from the scope of this guidance document. Separate rules or guidance addressing procedures for electronic communications in hearings will be issued in the future for public comment.

1.3.5 Freedom of Information Act and Privacy Act Requests

All Freedom of Information Act (FOIA) and Privacy Act requests and appeals may be submitted electronically by EIE, CD–ROM, facsimile, or e-mail. However, e-mail requests may not reveal personal privacy information.

2.0 Parameters for Electronic Files Submitted to the NRC

Unless otherwise noted, all electronic documents submitted to the NRC, including all enclosures or attachments that are

documents, should meet the file format specifications delineated in this section. Note: any electronic file that can be converted to PDF format (spreadsheets, slide presentations, etc.) Is considered a document by the NRC and is subject to these specifications.

Submittals may also contain other forms of electronic information including data files, computer models, and video or audio clips that are not considered documents. These files are not required to conform to the file format specifications established for documents.

2.1 File Formats

Electronic materials should be submitted in PDF or otherwise meet the specifications delineated in this section.

The following table defines the particular PDF output file formats and their use when submitting electronic documents to the NRC:

PREFERRED PDF OUTPUT FILE FORMAT

File format	Version	Filename extension	Recommended use
Adobe® Acrobat Portable Document Format (PDF) Formatted Text and Graphics (Formerly known as PDF Normal). Options should be set according to the settings described in Section 2.6.	Current or 2 previous	pdf	Textual documents converted from native applications only*,**.
Adobe® Acrobat PDF Searchable Image (Exact) [formerly known as PDF Original Image with Hidden Text]. Options should be set according to the settings described in Section 2.6.	Current or 2 previous	pdf	Textual documents converted from scanned documents.
Adobe® Acrobat PDF Image Only. Options should be set according to the settings described in Section 2.6.	Current or 2 previous	pdf	Preferred format for graphic-, image-, and forms-oriented documents (not for capture of text).

*Textual documents scanned from original paper copies converted to PDF Formatted Text and Graphics result in capture of only a text file that contains OCR conversion errors. This inaccurate representation of the original document is not acceptable for capture by the NRC as an archival record. If the native format of a document is not available for creating a PDF file, the NRC recommends that Searchable Image (Exact) PDF be generated from a scanned image of the document. This will create a PDF file that contains a 100% accurate representation of the original document which will be acceptable for transfer to the National Archives.

**Adobe® PDF Formatted Text and Graphics files that contain embedded images of text will not be accepted. These files are usually a result of cutting and pasting images of text, instead of the text itself, from one document to another while creating documents using word processing applications. This practice results in a picture of the text being created that is not full text searchable. However, images of text that are intended as a graphical representation only and are not meant to convey the information contained in the text will be accepted.

Note: Adobe has recently established a fourth PDF output file format (PDF Searchable Image (Compact)) that uses compression techniques to reduce file sizes of images. This is not an acceptable format for submission to the NRC because it uses lossy compression techniques that do not result in a true and accurate representation of the original document.

Images originally created in a Tagged Image File Format (TIFF) that are primarily graphic-oriented in nature may be converted to PDF for submission to NRC using the PDF Image Only format as described above.

The NRC recommends that the results of spreadsheet applications be converted to one of the acceptable PDF file formats. The NRC staff may also require spreadsheet data to perform additional calculations/analyses. Spreadsheet data may be submitted using the following acceptable formats.

File format	Version	Filename EXTENSION	Preferred Use
Microsoft® Excel	Current or 2 previous	xls	Spreadsheet calculations.
Corel® QuattroPro	Current or 2 previous	wb3	Spreadsheet calculations.
Lotus® 1–2–3	Current or 2 previous	wk3/wk4	Spreadsheet calculations.

When submitting an electronic file using one of the acceptable formats, do not change the default, three-character extension for the file (*e.g.,* a document prepared as ''license_amendment.pdf'' should be submitted with the ''.pdf'' file extension and a document prepared as a Microsoft Excel spreadsheet should be submitted with the ''.xls'' file extension).

2.2 Naming Conventions

Documents submitted to the NRC must:

- Conform to ISO 9660 format, including following the Joliet Extension.
- Have filenames that are limited to 49 characters (including the ''.'' and the three-character filename extension).
- Retain the default three-character file extension associated with the format in which the document was created (Example: for files created to conform to Adobe's Portable Document Format, ''.pdf''; for files created using Microsoft Excel, ''.xls'').
- Include a three-digit numeric prefix (*e.g.,* 001, 002, 003) in the filename that designates the correct order of the files contained in the submission, followed by the name of the file (Example: ''001filename of first document.pdf'').
- Filenames should be based on the logical breakpoint used for segmentation of the document (*e.g.,* chapter, section, etc.) as described in Section 2.14.

FILE NAMING EXAMPLE TABLE

Document title	File name
Multiple File Documents	
Chapter 1, Section 1 Estimate of Long-Term Geo-chemical Behavior	001_1.1 Estimate of Long-Term Geochem Behavior.pdf.
Chapter 2, Section 2 Estimate of Long-Term Geo-chemical Behavior	002_2.2 Estimate of Long-Term Geochem Behavior.pdf.
Appendix A Estimate of Long-Term Geo-chemical Behavior	003_Ap A Estimate—Long-Term Geochem Behavior.pdf.

FILE NAMING EXAMPLE TABLE—Continued

Document title	File name
Single File Documents	
Attachment II, CAL–EBS–NU–000017 Rev 003 Calculation, Radiolytic Specie Generation from Internal Waste Package Criticality.	001_Att 2 CAL–EBS–NU–00017 R003.pdf.
List and Schedule for Model Validation Reports related to Criticality	001_List_Sched for MVRs related to Criticality.pdf.

2.3 File Size Limitations

Large-size files create challenges for both the NRC staff and the public when viewing or downloading the documents. Therefore, the NRC requests that submitters make every effort to limit the size of each file to 50MB. If a document exceeds 50MB, it should be created using logical breaks in the document (*e.g.,* file broken up into individual chapters—*see* section 2.14).

Additionally, small-size files are problematic as well. Large volumes of files require significant resources to capture and profile in electronic document management systems. Therefore, the NRC encourages submitters to combine files that are components of larger documents to create 50MB files that can be more economically and efficiently managed.

The maximum size of a document submittal to the NRC depends on the method of transmission. For example, submitters may use EIE to submit PDF files and/or accepted spreadsheet files (*see* section 3.2) that do not exceed 50MB, including all attachments. Submitters should use the CD–ROM transmission method in all other cases unless e-mail or facsimile is an appropriate option. (*See* sections 5.2 and 6.2.) The use of compression techniques (zipped files, downsized files, etc.) is not allowed for electronic files submitted to the NRC because they use lossy compression techniques that do not result in a true and accurate representation of the original document. The table below summarizes the size limitations based on the method of file transmission:

Method of transmission	Size limitations
Electronic Information Exchange (EIE)	Less than or equal to 50MB*.
CD–ROM	50MB or less per individual file on CD **, * * *
E-mail	Less than or equal to 10MB +.

*Total, combined size of message and attachments comprised of PDF file(s) and accepted spreadsheet format file(s). **Note:** Oversize drawings and other files with special printing requirements (Section 2.8), regardless of the file size, should be provided on CD–ROM.

**The total CD capacity may be used but submitters are urged to limit individual files to 50MB or less.

* * *In some cases a single page document or object (*e.g.,* oversize color drawing) may exceed the 50MB file size limit. Submission of oversize files (in excess of the 50MB limit) are allowed in these instances.

2.4 Security/Access Settings

Submissions should not contain any security settings, password protections, or any other attributes that will preclude full NRC access to and use of the files. NRC's internal security and archival processes will maintain the integrity of the materials that are submitted.

2.5 Resolution

To comply with NARA Standards, PDF documents should be created using the following resolution guidelines:

- Bi-tonal (black and white) PDF resolution, not less than 300 dots per inch (dpi)
- Color PDF resolution, not less than 300 dpi
- Grayscale PDF resolution, not less than 300 dpi

Adobe® Acrobat ''downsampling'' (an optimization option available in Adobe Acrobat) may result in images with resolutions less than acceptable for submission to the NRC. Therefore, its use is not recommended.

2.6 Settings for Creating PDF Formatted Text and Graphic Files

Adobe® Acrobat 5.0 provides four default optimizations when creating PDFs. These are eBook, Press, Print, and Screen. The NRC has reviewed these optimizations and has established a custom optimization that strikes a balance between print and screen optimizations. This custom optimization provides adequate retrieval response time for viewing online while providing sufficient clarity and resolution for printing. The settings established for this custom optimization are listed below and should be used on all submittals to the NRC. The settings are specific to Adobe® Acrobat 5.0. However, when PDF creation software other than Adobe® Acrobat 5.0 is used, the PDF creation software should be configured with values equivalent to those listed below. All fonts should be embedded in the PDF file to ensure compliance with NARA guidelines.

SETTINGS

Options	Recommendation Optimal on 5.0
General Options:	
Compatibility	5.0
Optimize for Fast Web	X
Embed Thumbnails	
Auto-Rotate	
Binding	Left
Resolution (dpi)	300
Compression:	
Color Images	Bicubic Downsampling (NOT SELECTED)
For images above	300 dpi
Compression	Zip
Quality	8-bit
Grayscale	Bicubic Downsampling (NOT SELECTED)
For images above	300 dpi
Compression	Zip
Quality	8-bit

SETTINGS—Continued

Options	Recommendation Optimal on 5.0
Monochrome	Bicubic Downsampling (NOT SELECTED)
For images above	450 dpi
Compression	CCITT—Group 4
Anti-Alias to Gray	Not Selected
Compress Text & Line Art	Selected
Font:	
Embed All Fonts [1]	X
Subset embedded fonts when percent of characters used is less than 100%	
When Embedding Fails	Warn & Continue
Color:	
Setting File	None
Color Management Policy	Tag Everything for Color Management
Intent	Default
Gray	None
RGB	SRGB IEC61966–2.1
CMYK	U.S. Web Coated (SWOP)v2
Preserve Overprint Settings	X
Preserve Under Color Removal	X
Transfer Function	Preserve
Preserve Halftone	
Advanced Options:	
Prologue.ps & Epilogue.ps	
Allow PS to Override Job Options	X
Preserve Level 2 Semantics	X
Save Job Ticket	X
Illustrator Mode	X
Gradients to Smooth Shades	X
ASCII Format	
Process DSC Comments	X
Log DSC Warnings	
Resize for EPS	X
Preserve EPS Info	X
OPI Comments	X
Preserve Doc Info from DSC	X

[1] You must check the license(s) for any font(s) you intend to embed, to verify that embedding is allowed. In some cases, the program will warn you if a font is not licensed for embedding, but this varies by vendor. Fonts must be embedded to comply with NARA guidelines.

2.7 Use of Color

The NRC discourages the use of color because it significantly increases file size. If the use of color adds no value to the understanding of the information presented, its use should be avoided. If color is required to make the document understandable, its limited use is acceptable. Examples of color documents that meet this criteria are graphs, bar-charts, and engineering drawings that depend exclusively on the differences in color to understand the information and data being presented.

2.8 Files With Special Printing Requirements

Documents that contain electronic files with special printing requirements, such as requiring the use of a plotter or other special equipment to print, oversize drawings or graphics that require a paper size larger than 11 inches by 17 inches, or other enhancements such as 3D images, etc., may only be submitted electronically via CD–ROM as separate files. If special software components (*e.g.,* printer drivers) are necessary, include those components, their configuration parameters, and any hardware configuration requirements on the same CD–ROM.

2.9 File Linkages

Files containing objects (*e.g.,* pictures, tables, spreadsheets, and images of text) using link protocols such as Object Linking and Embedding (OLE), Dynamic Data Exchange (DDE), or any other object linking between electronic files are not practicable for the NRC to accept because the relationships among links in multiple file submissions are lost when captured in ADAMS or other agency electronic recordkeeping systems. However, links within a single electronic PDF file are acceptable.

2.10 Viruses

Files received by the NRC will be checked for viruses prior to acceptance. Any submission identified as having a virus will be rejected and returned to the submitter with an explanation of why the submittal was rejected.

2.11 Macros

Macros in files such as Microsoft® Excel are sometimes detected as viruses. Therefore, the use of macros should be limited because a file identified as having a virus will be rejected and returned to the submitter with an explanation of why the submittal was rejected.

2.12 Copyrighted Information

Submitting information electronically to the NRC shall be deemed to constitute authority for the NRC to place a copy of the information on its public document database and for the NRC to reproduce and distribute sufficient copies to carry out its official responsibilities. NRC use of the information specified herein does not constitute authority for others to use the information outside applicable requirements of copyright law.

2.13 Copies

Licensees and vendors submitting documents via EIE do not need to send confirming hard copies of the electronic documents. In instances where the NRC requires a paper copy for accessibility or other reasons, it will make every effort to produce the copy using NRC resources. However, in those instances where the agency is unable to successfully generate an accurate paper copy from the electronic submittal, the NRC may require a paper copy from the submitter. This will be handled on a case-by-case basis.

Many NRC regulations require submission of copies of documents to multiple NRC locations (*e.g.,* Headquarters, Regional Offices, etc.). This practice continues for submissions that are made on CD–ROM. However, only a single copy of the CD–ROM is required to be submitted to each location.

Submissions made via EIE do not require submission to multiple locations.

2.14 Segmentation of Large Documents

Submitters should use the CD–ROM method of transmission (Section 4.0) for documents with file sizes greater than 50MB. Divide the document into file segments of 50MB or less at logical breakpoints such as:

a. Chapters.
b. Sections.
c. Subsections.
d. Appendices.
e. Exhibits or attachments.
f. Charts, tables, or formulae.
g. For large transcripts, the end of a witness' testimony or session recess.

If the recommended file size cannot be achieved, consider moving the graphics (which are often large files) to an appendix or attachment. Any graphic or other large object that exceeds the 50MB limit and that cannot logically be divided should not be segmented.

Note: Oversize drawings and other files with special printing requirements (Section 2.8), regardless of the file size, should be provided on CD–ROM.

Additionally, small-size files are problematic as well. Large volumes of files require significant resources to capture and profile in electronic document management systems. Therefore, the NRC encourages submitters to combine files that are components of larger documents to create larger files that can be more economically and efficiently managed.

When CD–ROMs are submitted, use electronic folders to organize the contents at the chapter level consistent with the file name guidance outlined in Section 2.2. The numeric portion of the file name should be sequential across all folders. This means:

- Each chapter must have its own folder which should then contain all files associated with that Chapter, including sections, subsections, and graphics (either embedded within those sections/subsections or provided separately).
- The sections/subsections should be placed in logical sequential order within a folder.
- Separate folders may be created for appendices, exhibits, or attachments. Each item should have the file name reflect the folder where it resides, if practical, in conjunction with complying with the file name guidance in Section 2.2.

If multiple CD–ROMs are submitted, place the Table of Contents for the entire submission on each CD–ROM in a multi-set submission.

2.15 Sensitive or Non-Public Documents

Documents containing information that is deemed sensitive unclassified, specifically Proprietary Information (*e.g.,* trade secrets, privileged, or confidential commercial or financial information), personal privacy information, or other Official Use Only information, may be submitted electronically via EIE or on CD–ROM. Documents containing Classified Information (*i.e.,* National Security Information and Restricted Data) and Safeguards Information may be submitted electronically only on CD–ROM, but not via EIE or e-mail. (*See* sections 3.9 and 4.3.1.)

3.0 Guidance for EIE Submissions

3.1 Who Can Participate

Applicants, licensees, external entities (including Federal, State, and local governments), vendors and members of the public who submit documents to the NRC may do so via EIE. The EIE is designed to ensure that electronic documents can be transmitted via the Internet in a secure and unalterable manner. Submittals such as those that are required to be submitted under oath or affirmation may be safely transmitted via EIE. Applicants, licensees, vendors, etc., must designate individuals who will have the responsibility for originating, signing, or sending documents to the NRC in compliance with regulatory requirements.

3.2 What Can Be Submitted

Documents may be submitted via EIE *except as noted in section 1.3.1.A.* and must qualify according to the following criteria:

- The file format is PDF and/or an acceptable spreadsheet format—*See* Section 2.1, and
- The entire submission is less than 50MB.

3.3 How To Register

The NRC provides for overall administration of the EIE process through the designated Local Registration Authority (LRA). The LRA creates and maintains an Authorized Certificate List (ACL) consisting of authorized internal and external EIE participants. Each participant must send an ACL containing the name and e-mail addresses of individuals who will be submitting digitally signed documents to the NRC. The ACL must be sent to the NRC in a signed paper form to the following address: Local Registration Authority (T6 C30), Electronic Information Exchange, U.S. Nuclear Regulatory Commission, Washington, DC 20555–0001.

Upon receipt of the ACL, the NRC will e-mail to each individual named a unique personal identification number (PIN) to be used in applying for a digital certificate. Once received, the digital certificate will then enable individual users to digitally sign documents and submit them in a secure manner. The PIN number will be sent approximately 3 to 5 business days after receipt of the ACL. Participants may add or delete names from the ACL by written notification to the NRC using the above address. The LRA will use the ACL to validate authorized individuals requesting digital signature certificates. The LRA may be contacted via e-mail at *EIE@nrc.gov.*

3.4 What Is Needed To Participate

Participating individuals in the EIE initiative may use their existing workstations with standard desktop configuration. The recommended workstation configuration requires a Pentium 133 MHZ (or higher) with a minimum of 32 MB of RAM, 20 MB of available disk space, and access to the World Wide Web (Web) through an Internet Service Provider (ISP). The operating system should be either Windows NT/2000 or Windows 95 (or higher). In addition, each workstation must be equipped with browser software, consisting of either Netscape Navigator or Communicator (version 4.6 or higher) or Microsoft Internet Explorer (version 5.0 or higher). Other browser types, such as AOL or Mosaic, are not currently supported for use in the EIE system.

To utilize EIE, each individual must obtain a digital signature certificate (Digital ID) in order to digitally sign and submit the form used to transmit documents and to access the EIE external server to retrieve documents as needed. (*See* Section 3.5 of this guidance document.) Additionally, there is a software plug-in that must be downloaded and installed. Each process and step required to set up a computer or workstation to use EIE is described in the sections below. The processes and steps described are specific to both Netscape Navigator/Communicator 4.6 or higher and Microsoft Internet Explorer 5.0 or higher.

3.5 How To Obtain a Digital Signature Certificate

To obtain a Digital ID, authorized participants must first complete and submit an enrollment form. VeriSign, Inc. acts as the NRC's Certificate Authority (CA) and provides the NRC with a Digital Certificate (ID) enrollment page on its Web site. The NRC provides VeriSign Onsite Digital Certificates (ID's) at no cost to participants. The steps for obtaining a Digital Certificate are provided on the EIE home page at *http://www.nrc.gov/site-help/eie.html.* After accessing the EIE home page, click on the ''Request/Retrieve Certificate'' hyperlink and follow the step-by-step prompts.

3.6 How To Obtain Software Plug-ins

To utilize the EIE system, users must download and install one software plug-in. The software plug-in can be obtained from the EIE home page on the NRC Web site at *http://www.nrc.gov/site-help/eie.html.* The specific plug-in required is the Internet Form Viewer, which is a required plug-in regardless of the browser used. To successfully download and install the plug-in, simply go to the EIE home page and click on the ''EIE Start Up'' hyperlink and follow the step-by-step procedures provided.

3.7 How To Submit Documents

Documents eligible for submission to the NRC are restricted to specific formats. No documents with special attributes (*e.g.,* documents with special printing requirements, such as requiring the use of a plotter or other special equipment to print, or other enhancements such as 3D images, etc.) will be accepted via EIE. The acceptable formats for electronic submission via EIE are listed in section 2.1 above. The submission of documents to the NRC using EIE will require the use of the NRC's EIE form. The EIE form is a document based on Extensible Mark-up Language (XML). It allows participants to sign, enclose, submit, and verify documents via the Internet. The document to be submitted or transmitted must be presented as an enclosure to the form. The form can be accessed by going to the NRC Web site at *http://www.nrc.gov/site-help/eie.html.* Once there, select either the

''Submit'' or ''Retrieve'' hyperlink to access the form.

Once the form is displayed, users will need to fill in the fields on the form and attach the document(s) for submission to the NRC. Once the fields have been filled in and the intended documents are attached, the form must be digitally signed.

Documents submitted electronically using EIE do not need to be digitally signed by the author(s). They may be digitally signed by the person who transmits them, but the author(s) are accountable for the content of the document(s) submitted. Generally, the persons who will digitally sign documents and transmit them electronically to the NRC are the same persons who currently dispatch licensing documents through the mail to the NRC. Licensees and vendors submitting documents via EIE do not need to send confirming hard copies of the electronic documents.

NRC regulations require that some documents be filed under oath or affirmation. There are currently two acceptable methods for providing this oath using the EIE processes.

1. Documents requiring oath or affirmation may use EIE to digitally sign the affirmation on the document. Using this process, the document must conclude with a statement to this effect: ''I declare under penalty of perjury that the foregoing is true and correct. Executed on [date]''.

The electronic document must be digitally signed by the person affirming this statement. This person may then transmit the document directly to the NRC using EIE or may forward the document to someone else for transmission to the NRC. In the latter case, the transmitter must also sign the document to authorize the electronic transmission.

Except as set forth below, multiple documents requiring individual digital signatures by different persons cannot be sent in a single EIE transmission. The current EIE process only allows two persons to digitally sign a single transmission. Therefore, the NRC recommends that the method described below in item 2 be used for submissions that require multiple oath and affirmations.

Note: When digitally signing a document, the submitter is actually digitally signing the transmission form, not the document. Signing the form is the equivalent of signing the document.

2. Oath or affirmation affidavits may also be created in hard copy and physically signed. The original paper copy may then be scanned to create a PDF Searchable Image (Exact) file of the original signature page. This page, with the rest of the PDF file of the entire attachment, may then be submitted via EIE.

Note: Although there are other methods available to electronically sign documents using wordprocessing and other software, these are not currently acceptable for use in signing documents for submission to the NRC because they do not provide the levels of authentication, certification, and non-repudiation that are present in the EIE process.

Documents transmitted to the NRC electronically using EIE will be time- and date-stamped when the last bit of the transmittal is received by the EIE server. The time and date of the transmission will become part of the record in the NRC's Agencywide Documents Access and Management System (ADAMS). The transmitter will be e-mailed a notice of receipt of the document. The notice will include the time and date the transmission was received at the NRC.

Submission of documents via EIE satisfies agency submittal requirements. The submitter need not send additional copies to NRC regions or other agency offices.

For more detailed information and step-by-step procedures on how to submit documents to the NRC using EIE, see the ''EIE Submittal Procedures'' on NRC's Web site at *http://www.nrc.gov/site-help/eie.html.*

3.8 Where To Submit Documents

Documents submitted using EIE are automatically sent to the NRC Document Processing Center for processing into ADAMS. No additional information is necessary, except for submissions intended for a Region. Submissions intended for the Regions should have the Region(s) listed in the comment box contained on the submission form.

3.9 Sensitive or Non-Public Documents

Documents containing information that is deemed sensitive unclassified, specifically Proprietary Information (*e.g.* trade secrets, privileged, or confidential commercial or financial information), personal privacy information, or other Official Use Only information, may be submitted electronically via EIE. Documents containing Classified Information (*i.e.,* National Security Information and Restricted Data) and Safeguards Information may not be submitted electronically via EIE.

Submissions made via EIE that contain non-public information must be clearly marked with the appropriate designation (*i.e.,* Proprietary Information, Privacy Act Information, or Official Use Only Information). When submitting documents via EIE that contain both publicly and non-publicly available files, all of the files should be clearly marked.

3.10 Additional User Assistance (References and Contact Information)

Additional information, as well as detailed user guides can be obtained from NRC's Web site at *http://www.nrc.gov/site-help/eie.html.*

Should you have any questions, please contact the Local Registration Authority (LRA) at 301–415–6030 or by e-mail at *EIE@nrc.gov.*

4.0 Guidance for CD–ROM Submissions

4.1 Who Can Participate

This guidance is intended for licensees, applicants, external entities (including Federal, State, and Local governments), vendors, and members of the public who submit documents to the NRC.

4.2 What Can Be Submitted

Documents may be submitted via CD–ROM *except as noted in section 1.3.1.B.* above. As mentioned in Section 1, there are also documents that should only be submitted using CD–ROM, such as large documents exceeding 50MB and documents that contain special printing requirements. Documents containing Classified Information (*i.e.,* National Security Information and Restricted Data) and Safeguards Information may only be submitted electronically on CD–ROM and not via EIE or e-mail.

4.3 How To Submit CD–ROMs to the NRC

Each electronic submission made on CD–ROM must be transmitted by a signed letter in paper format (see transmittal letter example below). On the first page of the transmittal letter, submitters should include the following information, if applicable:

- Organization or Individual Name/Address (Author).
- Docket Number (050–00XXX, 030,XXXXX, 110,XXXXX).
- Subject Line (a non-sensitive, brief, descriptive narrative of the subject of the submission that should include any relevant regulation upon which the submission is based).
- Any requests for withholding from public disclosure in accordance with 10 CFR 2.790.

On the last page of the transmittal letter, submitters should provide:

- The name, mailing and e-mail addresses, and phone number of a contact person who can resolve discrepancies, if any, in document submissions.
- A complete listing of the document components (electronic files and/or physical objects) that make up the submission. The components should be listed in the order in which they appear in the document. CD–ROM submissions that require multiple CD–ROMs to transmit all of the document components should indicate the total number of CD–ROMs included in the submission.

Each of the listed components should indicate the following information:

- The file name (as defined in Section 2.2, including file extension).
- The size of the file.
- Sensitivity level (*e.g.,* publicly available, proprietary, classified, *etc.*).
- A non-sensitive description of all non-document components (*e.g.,* digital image, *etc.*) in the format illustrated by the example below.

In addition, If there are any special instructions regarding the use of the CD–ROM (*e.g.,* how to open the files, access the publication, *etc.*), include them as part of the transmittal letter.

For electronic submissions via CD–ROMs that contain Classified Information (*i.e.,* National Security Information and Restricted Data), sensitive unclassified information, or non-public documents, additional requirements apply as described in sections 4.3.1 and 4.3.5.

Transmittal Letter Example

Author
United States Department of Energy
Office of the General Counsel
Hearing Division
Washington, DC 20585

September 18, 2005
[Docket WM–00011 (PRE)]

United States Nuclear Regulatory Commission
Atomic Safety and Licensing Board
Attn: Document Control Desk
11555 Rockville Pike
Rockville, MD 20852

Subject

Enclosed is DOE's Response to Interrogatories Related to Quality Control Procedures.

Request to Withhold From Public Disclosure

The file named ''004 Figure 371 Plan View Main Excavation.pdf'' contains business proprietary information and the USDOE requests that this file be withheld from public disclosure.

Contact

Name: Saranne Smith
Mailing Address: Hearing Division, US Department of Energy, Washington, DC 20585
E-Mail Address: *SESSmith@usdoe.gov*
Phone Number: 202–555–1111

Document Components:

A total of two (2) CD–ROMs are included in this submission. The CD–ROM labeled ''DOE03–001 Evaluation Quality Control Parts 1, 2, and 3—Non-publicly Available'' contains the following four (4) files:

001 Evaluation Quality Control (1 of 3).pdf 48,321,678 bytes, publicly available
002 Evaluation Quality Control (2 of 3).pdf 47,421,178 bytes, publicly available
003 Evaluation Quality Control (3 of 3).pdf 49,223,167 bytes, publicly available
004 Figure 371 Plan View Main Excavation.pdf 101,175,297 bytes, proprietary

The CD–ROM labeled ''DOE03–002 Evaluation Quality Control Parts 1, 2, and 3—Publicly Available'' contains the following three (3) files:

001 Evaluation Quality Control (1 of 3).pdf 48,321,678 bytes, publicly available
002 Evaluation Quality Control (2 of 3).pdf 47,421,178 bytes, publicly available
003 Evaluation Quality Control (3 of 3).pdf 49,223,167 bytes, publicly available

Non-Document Description Example

Figure 371 Plan View Main Excavation

This single page, over-sized engineering drawing is referenced in ''Evaluation Quality Control'' part 2 of 3. The drawing is done in 6 colors and is useful when printed using 24″ by 36″ paper stock or viewed on a large high resolution monitor using PDF reader software. It has been scanned at 300 dpi resolution and output in PDF 1.3 using the Image Only option. Figure 371 is one of four (4) files on the CD–ROM labeled ''DOE03–001 Evaluation Quality Control Parts 1, 2, and 3—Non-publicly Available'' and is located as the fourth file on the CD–ROM.

Sincerely,
J. Doe, Attorney for DOE
cc: Provide list of parties served

4.3.1 Sensitive or Non-Public Documents

Documents containing information that is deemed sensitive unclassified, specifically Proprietary Information (*e.g.* trade secrets, privileged, or confidential commercial or financial information), personal privacy information, or other Official Use Only information, may be submitted electronically on CD–ROM. Documents containing Classified Information (*i.e.*, National Security Information and Restricted Data) and Safeguards Information may also be submitted electronically on CD–ROM.

Submissions made on CD–ROM must be accompanied by a transmittal letter (*see* section 4.3) that contains information regarding the sensitivity level of the transmitted documents. This letter should contain a listing of each file contained in the submission, with a description and the sensitivity for each file clearly marked.

When submitting documents via CD–ROM that contain both publicly and non-publicly available files, all of the files should be included on a CD–ROM. In addition, a separate CD–ROM must be provided that contains only the publicly available files. Each CD–ROM must be clearly labeled indicating its availability. Files contained on CD–ROMs labeled as ''Publicly Available'' will be released to the public.

CD–ROMs containing Classified Information must be processed and produced on systems approved under the provisions of 10 CFR 95.49. Each CD–ROM must be clearly labeled as containing classified information.

The mailing package containing CD–ROMs with documents containing Proprietary, personal privacy, or Official Use Only Information must be marked and transmitted in accordance with the requirements set forth in 10 CFR 2.790(b). Packages containing Safeguards Information must comply with the requirements of 10 CFR 73.21(e), 73.21(g), and 73.21(h), as appropriate. CD–ROMs containing Classified Information (*i.e.*, National Security Information or Restricted Data) must be packaged and submitted to the NRC in accordance with the requirements contained in 10 CFR 95.37, 95.39, and 95.41.

4.3.2 Oath or Affirmation

NRC regulations require that some documents be filed under oath or affirmation. There are currently two acceptable methods for providing this oath if such a document is submitted on CD–ROM.

1. Documents requiring oath or affirmation submitted on CD–ROM must include the following statement on either the transmittal letter or the first page of the document contained on the CD–ROM and must contain the signature of the person swearing to the accuracy of the information submitted: ''I declare under penalty of perjury that the foregoing is true and correct. Executed on [date]''.

If the oath or affirmation is submitted on the transmittal letter, it must contain the original signature of the person swearing to the accuracy of the information. If submitted as part of the document contained on the CD–ROM, the page containing the signature must be provided as a scanned PDF Searchable Image (Exact) file along with the PDF version of the entire document being submitted.

2. Oath or affirmation affidavits may also be created in hard copy and physically signed. The original paper copy may either be submitted along with the transmittal letter and CD–ROM, or can be scanned to create a PDF Searchable Image (Exact) file of the original signature page which may be submitted on the CD–ROM with the rest of the PDF file of the entire attachment. NOTE: The transmittal letter should indicate that a separate affidavit is being provided as part of the submittal package.

4.3.3 Living Documents

Many large documents historically submitted to the NRC have been maintained as living documents and have used a page-replacement approach for update. Paper submissions can still use this approach for providing updates to living documents.

In the electronic environment, this approach is not practicable. Consequently, if a submitter chooses to make electronic submission of these documents, all subsequent updates must be submitted as total replacements. The updated version must include a list of changed pages and each changed page must include both a change indicator for the area changed (for example, a bold line vertically drawn in the margin adjacent to the portion actually changed) and a page change identification including either the date of change, change number, or both.

4.3.4 CD–ROM File Format

The acceptable file formats are stated in Section 2.1. However, for text-oriented documents, the preferred file formats are Portable Document Format (PDF) Formatted Text and Graphics and PDF Searchable Image (Exact). PDF Image Only is preferred for submission of graphic\image documents. PDF files should be scanned at the resolutions stated in Section 2.5 of this document.

Large documents made up of multiple files, folders, etc., often require the inclusion of a search engine on the CD–ROM to facilitate navigation, search, and retrieval of the document. The inclusion of the search engine enables the user to access the material contained on the CD–ROM without having to rely on other software in the user's resident environment. The NRC encourages the inclusion of these search engines to facilitate the use of the materials in stand-alone mode. However, only those products that do not require the end-user to purchase a license to use the products are acceptable.

4.3.5 Packaging/Labeling

When submitting documents that contain both publicly and non-publicly available files, all of the files should be included on a CD–ROM. In addition, a separate CD–ROM must be provided that contains only the publicly available files. Each CD–ROM must be clearly labeled indicating its availability. CD–ROMs labeled as ''Publicly Available'' will be released to the public (sent to the Public Document Room, where they are available for inspection and copying). The mailing package containing CD–ROMs with documents comprised of Proprietary, personal privacy, or Official Use Only Information must be marked and transmitted in accordance with the requirements set forth in 10 CFR 2.790(b). Packages containing Safeguards Information must comply with the requirements of 10 CFR 73.21(e), 73.21(g), and 73.21(h), as appropriate. CD–ROMs

containing Classified Information (*i.e.*, National Security Information or Restricted Data) must be packaged and submitted to the NRC in accordance with the requirements contained in 10 CFR 95.37, 95.39, and 95.41.

Subsequent to the events of September 11, 2001, much of the incoming mail addressed to the Federal government is irradiated prior to delivery. Irradiation of CD–ROMs containing electronic information may result in damage to the media and its contents. Therefore, packages containing CD–ROM submissions should be clearly marked ''CONTENTS CONTAIN CD–ROMs. DO NOT IRRADIATE.''

4.3.6 Copies

Many NRC regulations require submission of copies of documents to multiple NRC locations (*e.g.*, Headquarters, Regional Offices, etc.). This practice continues for submissions that are made on CD–ROM. However, only a single copy of the CD–ROM is required to be submitted to each location.

4.3.7 Rejection of Submissions

It is not practicable for the NRC to accept:

- Any submission that contains a virus.
- Files submitted that are compressed.
- File formats other than those listed in Section 2.1, except submittals may also contain other forms of electronic information including data files, computer models, and video or audio clips.
- CD–ROMs that contain both publicly and non-publicly available files on a single CD, unless a second CD with only publicly available information is also provided.
- CD–ROMs containing OLE (Object Linking and Embedding), DDE (Dynamic Data Exchange), or any other object linking.
- Any inconsistencies, including omissions, between the transmittal letter and the files or physical objects received.

4.4 Where To Submit the CD–ROMs

Send CD–ROMs with transmittal letter to the mailing address specified in the regulation, order, or other document governing the submission of that particular application, report or correspondence. CD–ROMs containing Classified Information (*i.e.*, National Security Information and Restricted Data) must be marked in accordance with 10 CFR 95.37 and mailed to the appropriate NRC Classified mailing address. (*See* 10 CFR part 73, appendix A for a listing of addresses.)

4.5 Additional User Assistance (References and Contact Information)

Information can be found by visiting the NRC's Web site at *http://www.nrc.gov/site-help/eie.html.* Under the heading ''Related Information,'' find the section ''CD–ROM Submittal Procedures.''

For assistance or to discuss problems with making CD–ROM submissions of electronic filings, contact the Document Processing Services Section at 301–415–2488 during the NRC's normal business hours (7:30 a.m. to 4:15 p.m. eastern time) or e-mail *EIE@nrc.gov.*

5.0 E-Mail Submissions

5.1 Who Can Participate

This guidance is intended for licensees, applicants, external entities (including Federal, State, and local governments), vendors and members of the public who submit documents to the NRC.

5.2 What Can Be Submitted

Documents (except for communications with States and other Federal agencies) submitted by e-mail, including the text of the e-mail, should contain only information that could be made available to the public and may be used for:

- Rulemaking petitions and comments in rulemaking proceedings.
- Requests for enforcement action under 10 CFR 2.206, which may be sent to *2206PETITIONS@NRC.GOV.*
- All Freedom of Information Act (FOIA) and Privacy Act requests and appeals may be submitted electronically by e-mail. However, e-mail requests may not reveal personal privacy information.
- Responses to **Federal Register** Notices or other agency communications where NRC has provided a specific e-mail address.

Multiple document attachments are acceptable, but the e-mail cannot exceed the 10MB size limitation, and the e-mail must include the required information as listed in section 5.4.

In addition, the NRC provides a listing of contacts on the NRC Web site at *http://www.nrc.gov* that can be used for a variety of e-mail communications to the agency by selecting ''Contact Us'' from the home page. Documents can be submitted by e-mail for the purposes identified on the Web site, and should be sent to the specific e-mail address provided for each form of communication.

5.3 Rejection of Submissions

File submissions that do not meet the parameters outlined in this document, especially as outlined in Section 2.0, will be rejected and will require re-submission. If the e-mail (with attachments) exceeds the 10MB size requirement or contains a virus, the sender will receive an automated ''Undelivered Mail'' notice stating the reason for the delivery rejection.

If the documents do not comply with other file parameters outlined in section 2.0 (*e.g.*, unknown file format, compressed files, incorrect naming convention, corrupt/unreadable file or if it contains macros identified as potential viruses), the intended recipient may notify the addressee to re-submit the document(s). Finally, the body of the e-mail message/text must include the required information as listed in section 5.4.

5.4 How To Send E-Mail

Files sent via e-mail must be sent as an attachment to the e-mail message in order to retain the original formatting of the document(s). The e-mail message must include the name of a contact person who can respond to questions about the submission, along with the contact person's daytime phone number, mailing, and e-mail address. The e-mail must also identify/describe each document attached to the e-mail message. The format used to generate each of the identified file(s) must also be listed.

5.5 Where To Submit E-Mail

E-mail may be addressed to either specific individuals named as contacts or to the office specified in the regulation or communication specific to the document(s) being submitted, to addresses the NRC Web site provides for individual program offices or specific agency functions or services, or to the Office of Public Affairs. Individual program offices may be contacted by using the addresses found at the NRC Web site at *http://www.nrc.gov,* and selecting ''Contact Us'' from the home page. The Office of Public Affairs may also be contacted through the ''Contact Us'' page or at *OPA@nrc.gov.* The Office of the Secretary of the Commission may be contacted at *2206PETITIONS@NRC.GOV* for 2.206 petitions (use upper case where indicated). The sender will not be e-mailed a confirmation of receipt of the submission.

6.0 Facsimile (Fax) Submissions

6.1 Who Can Participate

This guidance is intended for licensees, applicants, external entities (including Federal, State, and local governments), vendors and members of the public who submit documents to the NRC.

6.2 What Can Be Submitted

Documents (except for communications with States and other Federal agencies) submitted by fax should contain only information that could be made available to the public and may be used for:

- Rulemaking petitions and comments in rulemaking proceedings.
- Requests for enforcement action under 10 CFR 2.206.
- All Freedom of Information Act (FOIA) and Privacy Act requests and appeals may be submitted electronically by facsimile. However, requests submitted by fax may not reveal personal privacy information.
- Responses to **Federal Register** Notices or other agency communications where NRC has provided for response by fax.
- Responses to NRC licensing-related questions.
- Information from export/import license applicants and licensees.

6.3 How To Send Facsimiles (Faxes)

Faxes must include the name of a contact person who can respond to questions about the submission, along with the contact person's daytime phone number and mailing or e-mail address.

6.4 Where To Submit Facsimiles (Faxes)

The NRC has established centralized receipt points (see listing of fax locations provided in section 6.5) for official submissions transmitted by fax at each of the Regional Offices and at NRC Headquarters. All official transmissions should be sent to one of these official receipt points to ensure that they are captured as official records of the agency.

6.5 Facsimile Locations and User Assistance

Location	Fax No.	User Assistance and Verification
Headquarters (24-Hour Operation)	301–415–7010 or 301–415–7020	301–415–7000.
Office of International Programs	301–415–2395	301–415–1787.
Freedom of Information Act and Privacy Act Officer	301–415–5130	301–415–7169.
Region 1	610–337–5324	610–337–5270.
Region 2	404–562–4900	404–562–4827.
Region 3	630–515–9915	630–829–9556.
Region 4	817–860–8210	817–860–8100.

7.0 Additional Resources

7.1 User Assistance

To obtain general information about accessing documents filed electronically (viewing, printing, and downloading), contact the NRC Public Document Room (PDR) during business hours.

You may contact the PDR librarians by any of the following means:

Telephone: 1–800–397–4209 or 301–415–4737.

TTY (hearing impaired): 1–800–635–4512.

Facsimile: 301–415–3548.

E-mail: pdr@nrc.gov.

U.S. Mail: Public Document Room, (O1F13), U.S. Nuclear Regulatory Commission, Washington, DC 20555–0001.

Onsite at the PDR: One White Flint North, 11555 Rockville Pike (first floor), Rockville MD.

Hours of PDR operation:

Reading Room: 7:45 a.m.—4:15 p.m. eastern time, Federal workdays.

Telephone Service: 8:30 a.m.—4:15 p.m., eastern time, Federal workdays.

7.2 References

NRC, EIE Web site; *http://www.nrc.gov/site-help/eie.html.*

The Code of Federal Regulations, Title 10—Energy *http://www.nrc.gov.* Select ''Code of Federal Regulations'' from the Index found on the home page.

Freedom of Information Act, 5 U.S.C. 552.

Privacy Act, 5 U.S.C. 552a.

[FR Doc. 03–25246 Filed 10–9–03; 8:45 am]

BILLING CODE 7590–01–P

Federal Register

Friday,
October 10, 2003

Part IV

Environmental Protection Agency

40 CFR Part 60

Update of Continuous Instrumental Test Methods; Proposed Rule

ENVIRONMENTAL PROTECTION AGENCY

40 CFR Part 60

[OAR–2002–0071; FRL–7566–8]

RIN 2060–AG21

Update of Continuous Instrumental Test Methods

AGENCY: Environmental Protection Agency (EPA).

ACTION: Proposed rule.

SUMMARY: We, the Environmental Protection Agency, are proposing to amend five instrumental test methods that are used to measure air pollutant emissions from stationary sources. The intended effect of this rule is to harmonize, simplify, and update the test methods. The methods were originally developed for specific industry applications but have since been adapted to general testing applications. These proposed revisions would remove inconsistencies in equipment and performance specifications so each method would be similar in these respects and have expanded applicability. We are also proposing to add helpful calculation procedures, quality assurance recommendations, and provisions for sampling at low concentrations. A large number of industries are already subject to the provisions requiring the use of these methods. Some of the affected industries and their Standard Industrial Classification codes are listed under **SUPPLEMENTARY INFORMATION.**

DATES: *Comments:* Submit comments on or before December 9, 2003.

Public Hearing: If anyone contacts us requesting to speak at a public hearing by October 27, 2003, we will hold a public hearing on November 10, 2003.

ADDRESSES: *Comments.* Comments may be submitted electronically, by mail, by facsimile, or through hand delivery/courier. Follow the detailed instructions as provided in Unit I.C. of the **SUPPLEMENTARY INFORMATION.** By U.S. Postal Service, send comments (in duplicate, if possible) to: Air and Radiation Docket and Information Center (6102), Attention Docket Number OAR–2002–0071, U.S. Environmental Protection Agency, 1200 Pennsylvania Avenue, NW., Washington, DC 20460. In person or by courier, deliver comments (in duplicate if possible) to: EPA Docket Center, Attention Docket ID No. OAR–2002–0071, EPA West, Room 108, 1301 Constitution Ave., NW., Washington, DC 20460. We request that a separate copy also be sent to the contact person listed below (*see* **FOR FURTHER INFORMATION CONTACT**).

Public Hearing. If a public hearing is held, it will be held at 10 a.m. in the EPA Auditorium, Research Triangle Park, North Carolina, or at an alternate site nearby.

Docket. Docket No. OAR–2002–0071, contains information relevant to this rule. You can read and copy it between 8:30 a.m. and 5:30 p.m., Monday through Friday, (except for Federal holidays), at the U.S. Environmental Protection Agency, EPA Docket Center, EPA West, Room 108, 1301 Constitution Ave., Washington, DC 20004; telephone (202) 566–1742. The docket office may charge a reasonable fee for copying.

FOR FURTHER INFORMATION CONTACT: Foston Curtis or Terry Harrison, Emission Measurement Center, Mail Code D205–02, Emissions, Monitoring, and Analysis Division, U.S. Environmental Protection Agency, Research Triangle Park, North Carolina 27711; telephone (919) 541–1063 or 5233; facsimile number (919) 541–0516; electronic mail address *curtis.foston@epa.gov* or *harrison.terry@epa.gov.*

SUPPLEMENTARY INFORMATION:

I. General Information

A. Affected Entities

Entities potentially affected by this action include those listed in Table 1.

TABLE 1.—ENTITIES POTENTIALLY AFFECTED BY THIS ACTION

Examples of regulated entities	SIC codes	NAICS codes
Fossil Fuel-Fired Steam Generators	3569	332410
Industrial, Commercial, Institutional Steam Generating Units	3569	332410
Municipal Waste Combustors	3567	562213
Hospital, Medical, Infectious Waste Incinerators	3567	562211
Petroleum Refineries	2911	324110
Stationary Gas Turbines	3511	333611

This table is not intended to be exhaustive, but rather provides a guide for readers regarding entities likely to be affected by this action. If you have any questions regarding the applicability of this action to a particular entity, consult the person listed in the preceding **FOR FURTHER INFORMATION CONTACT** section.

B. How Can I Get Copies of This Document and Other Related Information?

1. *Docket.* EPA has established an official public docket for this action under Docket ID No. OAR–2002–0071. The official public docket consists of the documents specifically referenced in this action, any public comments received, and other information related to this action. Although a part of the official docket, the public docket does not include Confidential Business Information (CBI) or other information whose disclosure is restricted by statute. The official public docket is the collection of materials that is available for public viewing at the EPA Docket Center, (EPA/DC) EPA West, Room 108, 1301 Constitution Ave., NW., Washington, DC 20460; telephone (202) 566–1742. The EPA Docket Center Public Reading Room is open from 8:30 a.m. to 4:30 p.m., Monday through Friday, excluding legal holidays. The telephone number for the Reading Room is (202) 566–1742.

2. *Electronic Access.* You may access this **Federal Register** document electronically through the EPA Internet under the **Federal Register** listings at *http://www.epa.gov/fedrgstr/.*

An electronic version of the public docket is available through EPA's electronic public docket and comment system, EPA Dockets. You may use EPA Dockets at *http://www.epa.gov/edocket/* to submit or view public comments, access the index listing of the contents of the official public docket, and to access those documents in the public docket that are available electronically. Once in the system, select ''search,'' then key in the appropriate docket identification number.

Certain types of information will not be placed in the EPA Dockets. Information claimed as CBI and other information whose disclosure is restricted by statute, which is not included in the official public docket, will not be available for public viewing in EPA's electronic public docket. EPA's

policy is that copyrighted material will not be placed in EPA's electronic public docket but will be available only in printed, paper form in the official public docket. To the extent feasible, publicly available docket materials will be made available in EPA's electronic public docket. When a document is selected from the index list in EPA Dockets, the system will identify whether the document is available for viewing in EPA's electronic public docket. Although not all docket materials may be available electronically, you may still access any of the publicly available docket materials through the docket facility identified in Unit I.B.

For public commenters, it is important to note that EPA's policy is that public comments, whether submitted electronically or on paper, will be made available for public viewing in EPA's electronic public docket as EPA receives them and without change, unless the comment contains copyrighted material, CBI, or other information whose disclosure is restricted by statute. When EPA identifies a comment containing copyrighted material, EPA will provide a reference to that material in the version of the comment that is placed in EPA's electronic public docket. The entire printed comment, including the copyrighted material, will be available in the public docket.

Public comments submitted on computer disks that are mailed or delivered to the docket will be transferred to EPA's electronic public docket. Public comments that are mailed or delivered to the Docket will be scanned and placed in EPA's electronic public docket. Where practical, physical objects will be photographed, and the photograph will be placed in EPA's electronic public docket along with a brief description written by the docket staff.

For additional information about EPA's electronic public docket, visit EPA Dockets online or *see* 67 FR 38102, May 31, 2002.

C. How and To Whom Do I Submit Comments?

You may submit comments electronically, by mail, by facsimile, or through hand delivery/courier. To ensure proper receipt by EPA, identify the appropriate docket identification number in the subject line on the first page of your comment. Please ensure that your comments are submitted within the specified comment period. Comments received after the close of the comment period will be marked ''late.'' EPA is not required to consider these late comments. However, late comments may be considered if time permits.

1. *Electronically.* If you submit an electronic comment as prescribed below, EPA recommends that you include your name, mailing address, and an e-mail address or other contact information in the body of your comment. Also include this contact information on the outside of any disk or CD–ROM you submit, and in any cover letter accompanying the disk or CD–ROM. This ensures that you can be identified as the submitter of the comment and allows EPA to contact you in case EPA cannot read your comment due to technical difficulties or needs further information on the substance of your comment. EPA's policy is that EPA will not edit your comment, and any identifying or contact information provided in the body of a comment will be included as part of the comment that is placed in the official public docket, and made available in EPA's electronic public docket. If EPA cannot read your comment due to technical difficulties and cannot contact you for clarification, EPA may not be able to consider your comment.

i. *EPA Dockets.* Your use of EPA's electronic public docket to submit comments to EPA electronically is EPA's preferred method for receiving comments. Go directly to EPA Dockets at *http://www.epa.gov/edocket,* and follow the online instructions for submitting comments. To access EPA's electronic public docket from the EPA Internet Home Page, select ''Information Sources,'' ''Dockets,'' and ''EPA Dockets.'' Once in the system, select ''search,'' and then key in Docket ID No. OAR–2002–0071. The system is an ''anonymous access'' system, which means EPA will not know your identity, e-mail address, or other contact information unless you provide it in the body of your comment.

ii. *E-mail.* Comments may be sent by electronic mail (e-mail) to *a-and-r-docket@epamail.gov,* Attention Docket ID No. OAR–2002–0071. In contrast to EPA's electronic public docket, EPA's e-mail system is not an ''anonymous access'' system. If you send an e-mail comment directly to the Docket without going through EPA's electronic public docket, EPA's e-mail system automatically captures your e-mail address. E-mail addresses that are automatically captured by EPA's e-mail system are included as part of the comment that is placed in the official public docket and made available in EPA's electronic public docket.

iii. *Disk or CD–ROM.* You may submit comments on a disk or CD–ROM that you mail to the mailing address identified in Unit I.C.2. These electronic submissions will be accepted in WordPerfect or ASCII file format. Avoid the use of special characters and any form of encryption.

2. *By Mail.* Send duplicate copies of your comments to: ''Update of Continuous Instrumental Test Methods,'' Environmental Protection Agency, Mail Code 6102T, 1200 Pennsylvania Ave., NW., Washington, DC, 20460, Attention Docket ID No. OAR–2002–0071.

3. *By Hand Delivery or Courier.* Deliver your comments to: EPA Docket Center, EPA West, Room 108, 1301 Constitution Ave., NW., Washington, DC 20460, Attention Docket ID No. OAR–2002–0071. Such deliveries are only accepted during the Docket's normal hours of operation as identified in Unit I.B.1.

4. *By Facsimile.* Fax your comments to: 202–566–1741, Attention Docket ID No. OAR–2002–0071.

D. How Should I Submit CBI to the Agency?

Do not submit information that you consider to be CBI electronically through EPA's electronic public docket or by e-mail. Only send or deliver information identified as CBI to the docket address to the attention of Docket ID No. OAR–2002–0071. You may claim information that you submit to EPA as CBI by marking any part or all of that information as CBI (if you submit CBI on disk or CD–ROM, mark the outside of the disk or CD–ROM as CBI and then identify electronically within the disk or CD–ROM the specific information that is CBI). Information so marked will not be disclosed except in accordance with procedures set forth in 40 CFR part 2.

In addition to one complete version of the comment that includes any information claimed as CBI, a copy of the comment that does not contain the information claimed as CBI must be submitted for inclusion in the public docket and EPA's electronic public docket. If you submit the copy that does not contain CBI on disk or CD–ROM, mark the outside of the disk or CD–ROM clearly that it does not contain CBI. Information not marked as CBI will be included in the public docket and EPA's electronic public docket without prior notice. If you have any questions about CBI or the procedures for claiming CBI, please consult the person identified in the **FOR FURTHER INFORMATION CONTACT** section.

E. What Should I Consider as I Prepare My Comments for EPA?

You may find the following suggestions helpful for preparing your comments:

1. Explain your views as clearly as possible.
2. Describe any assumptions that you used.
3. Provide any technical information and/or data you used that support your views.
4. If you estimate potential burden or costs, explain how you arrived at your estimate.
5. Provide specific examples to illustrate your concerns.
6. Offer alternatives.
7. Make sure to submit your comments by the comment period deadline identified.
8. To ensure proper receipt by EPA, identify the appropriate docket identification number in the subject line on the first page of your response. It would also be helpful if you provided the name, date, and **Federal Register** citation related to your comments.

Background

Methods 3A, 6C, 7E, 10, and 20 are instrumental test methods for determining diluent (oxygen and carbon dioxide), sulfur dioxide, nitrogen oxides, and carbon monoxide emissions from stationary sources. The methods were developed for boilers, electric utility plants, refinery catalytic cracking catalyst regenerators, and gas turbines covered under the New Source Performance Standards (NSPS) in 40 CFR part 60. They were later adopted into the Acid Rain regulations and State and regional programs. The test methods were not developed at the same time and do not contain consistent equipment and performance requirements. Currently, some methods require more up-to-date equipment than others and some have more stringent performance requirements than others. These dissimilarities have hampered the current trend of using the methods together in the field. We are proposing to make collective changes that would render the methods easier to use by harmonizing their requirements. This would also update obsolete requirements and add flexibility by allowing alternatives to various equipment and performance specifications. The revisions we are proposing to the data reduction procedures would increase the certainty of the generated data.

On August 27, 1997 (62 FR 45369), many of the updates of this action were proposed with a larger action that amended the stationary source testing and monitoring rules in 40 CFR parts 60, 61, and 63. In that proposal, minor revisions and updates were made and all test methods and performance specifications were revised into the new Environmental Monitoring Management Council (EMMC) format. Several commenters asserted that the preamble gave inadequate notice of the changes we were making to the instrumental methods. They argued that the proposal provided an inadequate basis and purpose statement and that it misled readers into thinking that no substantive changes were being made to the methods. Due to the large number of changes we were making in the regulations at that time, and in light of the section 307(d) requirements, the commenters requested that we address the instrumental method revisions through a separate proposal and not promulgate them with the rest of that package.

We agreed with these commenters concerns and stated our intention in the final rule [65 FR 61744] to repropose the revisions to the instrumental methods as a separate rule. In today's notice, we are proposing to revise equipment and procedures in the instrumental methods where appropriate to make their requirements consistent. We are also rewriting the methods in EMMC format. We have considered the comments we received pertinent to these methods in the August 27 proposal and are summarizing the major ones in this preamble. We will formally address all significant relevant comments from the first proposal in the final notice of these amendments.

Outline. The information presented in this preamble is organized as follows:

I. Why Are These Amendments Being Made to the Instrumental Methods?
II. What Changes Are Being Proposed to the Methods?
III. What Major Comments From the Previous Proposal are Pertinent to This Reproposal?
IV. What Statutory and Executive Orders Apply to This Rule?

I. Why Are These Amendments Being Proposed?

Amendments to Methods 3A, 6C, 7E, 10, and 20 are needed to update their performance requirements to state-of-the-art levels, remove obsolete specifications, harmonize similar requirements, and simplify to enhance their utility and reduce the costs of testing.

II. What Changes Are Being Proposed to the Methods?

We are proposing that Methods 3A, 6C, 7E, 10, and 20 in appendix A of 40 CFR 60 be revised to: (1) Make their equipment specifications and procedures as similar as possible to make them easier to use together in the field, (2) remove obsolete procedures and equipment listings, (3) add alternative performance tests, and (4) change their outline to conform with the standard EMMC format. We are proposing to base the analyzer calibration error on a percentage of the manufacturer certified gas value and the sampling system bias on a percentage of the applicable emission standard (except in Method 3A) instead of the span. For Method 3A, we are basing the tests on a percentage of the analyzer range. For the current bias test, the span may be chosen over a range of values instead of being a prescribed value. Under this allowance, the higher the span chosen for a test, the easier the performance criterion is met. We are proposing to base the bias test on a fixed value (the emission standard) to eliminate nonuniformity in stringency based on the tester's choice of a span. The calibration drift test that is currently required before and after each run would be dropped. We feel the bias test is a good enough indicator of analytical drift. We are also proposing to redefine the span as the highest concentration of the calibration curve (equivalent to the high-level calibration gas value).

The requirements of Method 10 would be modernized by upgrading many of its requirements to the current level of Methods 3A, 6C, and 7E. The analyzer calibration error test, sampling system bias test, and the calibration gases now required in Methods 3A, 6C, and 7E are being proposed for Method 10.

Methods 3A, 6C, and 10 are being proposed as abbreviated methods that reference Method 7E for much of the detail. Method 7E is being proposed as the full-length descriptive method. To remove the testing duplication between Method 20 and other methods, Method 20 would reference Methods 3A and 6C for diluent and sulfur dioxide measurements. The equations in Method 20 for concentration correction, fuel factor, and emission rate would be moved to Method 7E. Method 20 would exist as a placeholder in order to maintain references to it in State regulation and permit citations.

We are proposing the following specific changes to Methods 3A, 6C, 7E, 10 and 20:

1. Method 10 would incorporate the calibration error test and between-run sampling system bias tests.

2. The performance criteria for bias test would be based on the concentration of the emission standard rather than the span. The requirement to correct the sample concentration for sampling system bias is replaced by a calculation of the run uncertainty.

3. Initial interference tests may be analyzer type-certified by manufacturers. Thereafter, an interference test of major potential interferences would be required at least annually. An alternative interference test would be allowed for Method 6C.

4. Three calibration gases would be required for each test method (Method 10 now requires four gases). The calibration gases would have to be of EPA traceability protocol quality and be in the same concentration ranges as now prescribed in Method 6C.

5. The Method 20 calculations would be moved to Method 7E. Methods 3A and 6C would be referenced for diluent and sulfur dioxide measurements.

6. Method 7E would require an NO_2 to NO converter efficiency test before each test for systems that convert NO_2 to NO before analysis.

7. Chemiluminescence analyzers would not be the only allowed technology for Method 7E.

8. In Method 10, alternatives to the ascarite and silica gel interference traps would be allowed.

9. A table summarizing quality control measures, performance requirements, and acceptable alternatives would be added.

10. Specific requirements for sampling point selection would be added.

11. Provisions for manufacturer certification of interference and stability would be added.

12. The methods would be reformatted in the EMMC format.

III. What Major Comments From the Previous Proposal Are Pertinent to This Reproposal?

The public comments received from the previous proposal have been evaluated and will be addressed comprehensively in the Comments and Responses Document that supplements the final rule following from this proposal. A number of revisions have been made to the proposed methods based on these comments. In this preamble, we discuss the comments that have resulted in significant revisions. Other minor revisions have been made based on specific comments, but these will be addressed later in the Summary of Comments and Responses Document.

Several commenters expressed concern that the proposed calculation of the bias test relative to the applicable emission standard added confusion for tests conducted at facilities not subject to an emission standard. The commenters argued that this new approach would upset market-based program tests and tests where the emission standard is in units other than concentration.

We consider these concerns valid and are now proposing to allow market-based programs to continue to base the acceptance tests on the span. For cases where the emission standard is in units other than concentration, we are proposing a conversion table to help determine a concentration equivalent to the emission standard.

Commenters were both for and against eliminating the calibration drift test. Since the sampling system bias check includes a measurement of analytical drift, we believe the calibration drift test is not necessary. Additionally, the proposed requirements for manufacturer's certification of stability for low-concentration analyzers and the yearly recheck of the analyzer for interferences promotes the use of better and more stable analytical technology.

One commenter noted that there is no carbon dioxide or oxygen emission standard for any source. For this reason, the commenter felt that sampling system bias limits should not be tied to emission limits. We agree with the commenter and are proposing to base the bias test limits in Method 3A on a percentage of the analyzer range instead of a percentage of the emission standard.

One commenter suggested that EPA specify a minimum number of sampling points when there is no applicable regulation. We are adding the Method 1 sampling point specifications in this proposal and allowing the option to conduct a stratification test if fewer sampling points are believed adequate.

Several commenters preferred we replace the requirement to use the high-level gas in the bias test with the option to use either the mid- or high-level gas, depending upon which gas is closer to the stack gas concentration. This proposal has incorporated this recommendation.

One commenter suggested that developing interference data was the responsibility of the instrument supplier, not the tester. The commenter thought the current interference test was excessive, could lead to sloppy work or even falsification of interference data, and limits the range of sources where the method could be used. We have added an allowance for manufacturer certification of instruments, and we are requiring this certification where instruments will be used routinely to measure low (<15 ppm) concentrations. However, we feel that an ongoing program to ensure the instrument is properly maintained and is appropriate for the test facility is still needed. In this proposal we are adding an abbreviated check for major potential interferences, performed after the initial test and at least on a yearly basis, to show that the analyzer remains interference-free. We feel that maintaining the instrument in this way will increase data quality and promote instrument reliability.

Other commenters asked that the interference test be clarified. It was not clear whether the test must be performed with the first sampling event in a State or region, or the first sampling event of the calendar year. Was the test to be repeated if an analyzer undergoes significant maintenance? Would gas, oil, or coal boilers be considered different source types and require separate interference tests? One commenter recommended we consider modifying the requirement by stating that once an interference check is performed on a certain make or model of analyzer, additional checks on that company's same model need not be performed.

This proposal clearly states that the interference test is required for each different source category you test. This is irrespective of the regulatory jurisdiction or calendar year. The test must be repeated at each source category when a major instrument component (*e.g.,* detector) is replaced. Gas-, oil-, and coal-fired boilers would be considered the same source category if the test gas interference check is performed. This procedure challenges the analyzer with a number of potential interference gases. If the Method 6C/Method 6 comparison interference check is used for sulfur dioxide, we feel the potential interference differences among the three boiler types warrants three separate interference tests. However, we are proposing to allow the test gas interference check as an alternative to the Method 6C/Method 6 comparison interference test in Method 6C. We are proposing to allow the instrument manufacturers to type-certify analyzers to fulfill the initial interference test requirement.

Many commenters objected to the proposed bias correction equation and argued it was too complicated. We are proposing to drop the bias correction requirement in favor of calculating the level of uncertainty for a run.

IV. Statutory and Executive Order Reviews

A. Executive Order 12866—Regulatory Planning and Reviews

Under Executive Order 12866 (58 FR 51735 October 4, 1993), we must determine whether this regulatory action is ''significant'' and therefore subject to Office of Management and Budget (OMB) review and the requirements of this Executive Order. The Order defines ''significant regulatory action'' as one that is likely to result in a rule that may: (1) Have an annual effect on the economy of $100 million or more or adversely affects in a material way the economy, a sector of the economy, productivity, competition, jobs, the environment, public health or safety, or State, local, or tribal governments or communities; (2) create a serious inconsistency or otherwise interferes with an action taken or planned by another agency; (3) materially alter the budgetary impact of entitlements, grants, user fees, or loan programs, or the rights and obligations of recipients thereof; or (4) raise novel legal or policy issues arising out of legal mandates, the President's priorities, or the principles set forth in the Executive Order.

We have determined that this rule is not a ''significant regulatory action'' under the terms of Executive Order 12866 and is therefore not subject to OMB review. We have determined that this regulation would result in none of the economic effects set forth in section 1 of the Order because it does not impose emission measurement requirements beyond those specified in the current regulations, nor does it change any emission standard.

B. Paperwork Reduction Act

This rule does not impose any information collection burden that requires OMB review and approval under the provisions of the Paperwork Reduction Act of 1995 (44 U.S.C. 3501 *et seq.*).

C. Regulatory Flexibility Act

The RFA generally requires an agency to prepare a regulatory flexibility analysis of any rule subject to notice and comment rulemaking requirements under the Administrative Procedure Act or any other statute unless the agency certifies that the rule will not have a significant economic impact on a substantial number of small entities. Small entities include small businesses, small organizations, and small governmental jurisdictions.

For purposes of assessing the impacts of today's rule on small entities, small entity is defined as: (1) A small business as defined by the Small Business Administration's regulations at 13 CFR 121.201; (2) a small governmental jurisdiction that is a government of a city, county, town, school district or special district with a population of less than 50,000; and (3) a small organization that is any not-for-profit enterprise which is independently owned and operated and is not dominant in its field. Entities potentially affected by this action include those listed in Table 1 of section I.A.

After considering the economic impacts of today's proposed rule on small entities, I certify that this action will not have a significant economic impact on a substantial number of small entities. We are proposing to amend five instrumental test methods that are used to measure air pollutant emissions from stationary sources. The intended effect of this rule is to harmonize, simplify, and update the test methods. The methods were originally developed for specific industry applications but have since been adapted to general testing applications. These proposed revisions would remove inconsistencies in equipment and performance specifications so each method would be similar in these respects and have expanded applicability. We are also proposing to add helpful calculation procedures, quality assurance recommendations, and provisions for sampling at low concentrations. A large number of industries are already subject to the provisions requiring the use of these methods.

We invite comments on all aspects of the proposal and its impacts on small entities.

D. Unfunded Mandates Reform Act

Title II of the Unfunded Mandates Reform Act of 1995 (UMRA), Public Law 104–4, establishes requirements for Federal agencies to assess the effects of their regulatory actions on State, local, and tribal governments and the private sector. Under section 202 of the UMRA, EPA generally must prepare a written statement, including a cost-benefit analysis, for proposed and final rules with ''Federal mandates'' that may result in expenditures to State, local, and tribal governments, in the aggregate, or to the private sector, of $100 million or more in any one year. Before promulgating an EPA rule for which a written statement is needed, section 205 of the UMRA generally requires EPA to identify and consider a reasonable number of regulatory alternatives and adopt the least costly, most cost-effective or least burdensome alternative that achieves the objectives of the rule. The provisions of section 205 do not apply when they are inconsistent with applicable law. Moreover, section 205 allows EPA to adopt an alternative other than the least costly, most cost-effective or least burdensome alternative if the Administrator publishes with the final rule an explanation why that alternative was not adopted. Before EPA establishes any regulatory requirements that may significantly or uniquely affect small governments, including tribal governments, it must have developed under section 203 of the UMRA a small government agency plan. The plan must provide for notifying potentially affected small governments, enabling officials of affected small governments to have meaningful and timely input in the development of EPA regulatory proposals with significant Federal intergovernmental mandates, and informing, educating, and advising small governments on compliance with the regulatory requirements.

Today's rule contains no Federal mandates (under the regulatory provisions of Title II of the UMRA) for State, local, or tribal governments or the private sector. The rule imposes no enforceable duty on any State, local, or tribal governments or the private sector. In any event, EPA has determined that this rule does not contain a Federal mandate that may result in expenditures of $100 million or more for State, local, and tribal governments, in the aggregate, or the private sector in any one year. Thus, today's rule is not subject to the requirements of sections 202 and 205 of the UMRA.

E. Executive Order 13132—Federalism

Executive Order 13132, entitled ''Federalism'' (64 FR 43255, August 10, 1999), requires EPA to develop an accountable process to ensure ''meaningful and timely input by State and local officials in the development of regulatory policies that have federalism implications.'' ''Policies that have federalism implications'' are defined in the Executive Order to include regulations that have ''substantial direct effects on the States, on the relationship between the national government and the States, or on the distribution of power and responsibilities among the various levels of government.''

This rule does not have federalism implications. It will not have substantial direct effects on the States, on the relationship between the national government and the States, or on the distribution of power and responsibilities among the various levels of government, as specified in Executive Order 13132. Thus, the

requirements of section 6 of the Executive Order do not apply to this rule.

In the spirit of Executive Order 13132, and consistent with EPA policy to promote communications between EPA and State and local governments, EPA specifically solicits comment on this proposed rule from State and local officials.

F. Executive Order 13175—Consultation and Coordination with Tribal Governments

Executive Order 13175, entitled ''Consultation and Coordination with Indian Tribal Governments'' (65 FR 67249, November 6, 2000), requires EPA to develop an accountable process to ensure ''meaningful and timely input by tribal officials in the development of regulatory policies that have tribal implications.'' ''Policies that have tribal implications'' is defined in the Executive Order to include regulations that have ''substantial direct effects on one or more Indian tribes, on the relationship between the Federal government and the Indian tribes, or on the distribution of power and responsibilities between the Federal government and Indian tribes.''

This proposed rule does not have tribal implications. It will not have substantial direct effects on tribal governments, on the relationship between the Federal government and Indian tribes, or on the distribution of power and responsibilities between the Federal government and Indian tribes, as specified in Executive Order 13175. In this proposed rule, we are simply updating five emission test methods that applicable facilities are already subject to. Thus, Executive Order 13175 does not apply to this rule.

G. Executive Order 13045—Protection of Children From Environmental Health Risks and Safety Risks

Executive Order 13045 applies to any rule that EPA determines (1) is ''economically significant'' as defined under Executive Order 12866, and (2) the environmental health or safety risk addressed by the rule has a disproportionate effect on children. If the regulatory action meets both criteria, the Agency must evaluate the environmental health or safety effects of the planned rule on children and explain why the planned regulation is preferable to other potentially effective and reasonably feasible alternatives considered by the Agency.

The EPA interprets Executive Order 13045 as applying only to regulatory actions that are based on health or safety risks, such that the analysis required under section 5–501 of the Executive Order has the potential to influence the regulation. This final rule is not subject to Executive Order 13045, because it is not based on health or safety risks.

H. Executive Order 13211—Actions Concerning Regulations That Significantly Affect Energy Supply, Distribution, or Use

This action is not subject to Executive Order 13211, ''Actions Concerning Regulations That Significantly Affect Energy Supply, Distribution, or Use'' (66 FR 28355, May 22, 2001) because it is not a significant regulatory action under Executive Order 12866.

I. NTTAA—National Technology Transfer and Advancement Act

Section 12(d) of the National Technology Transfer and Advancement Act of 1995 (NTTAA), Public Law 104–113 (15 U.S.C. 272), directs us to use voluntary consensus standards (VCSs) in our regulatory activities unless to do so would be inconsistent with applicable law or otherwise impractical. Voluntary consensus standards are technical standards (*e.g.*, materials specifications, test methods, sampling procedures, business practices, *etc.*) that are developed or adopted by VCS bodies. The NTTAA requires us to provide Congress, through OMB, explanations when we decide not to use available and applicable VCSs. We are not proposing new test methods in this rulemaking but are revising and updating methods that have already been mandated for evaluating compliance with current emission standards. Therefore, NTTAA does not apply.

List of Subjects in 40 CFR Part 60

Environmental protection, Air pollution control, New sources, Test methods and procedures, Performance specifications, Continuous emission monitors.

Dated: September 24, 2003.

Marianne Lamont Horinko,

Acting Administrator.

For the reasons stated in the preamble, the Environmental Protection Agency proposes to amend title 40, chapter I of the Code of Federal Regulations as follows:

PART 60—STANDARDS OF PERFORMANCE FOR NEW STATIONARY SOURCES

1. The authority citation for part 60 continues to read as follows:

Authority: 42 U.S.C. 7401, 7411, 7413, 7414, 7416, 7601, and 7602.

Appendix A—Test Methods [Amended]

2. By revising Methods 3A, 6C, 7E, 10, and 20 to read as follows:

Appendix A to Part 60—Test Methods

* * * * *

Method 3A—Determination of Oxygen and Carbon Dioxide Emissions From Stationary Sources (Instrumental Analyzer Procedure)

1.0 Scope and Application

What Is Method 3A?

Method 3A is a procedure for measuring oxygen (O_2) and carbon dioxide (CO_2) in stationary source emissions using a continuous instrumental analyzer. Quality assurance and quality control requirements are included to assure that you, the tester, collect data of known quality. You must document your adherence to these specific requirements for equipment, supplies, sample collection and analysis, calculations, and data analysis.

This method does not completely describe all equipment, supplies, and sampling and analytical procedures you will need but refers to other methods for some of the details. Therefore, to obtain reliable results, you should also have a thorough knowledge of these additional test methods:

(1) Method 1—Sample and Velocity Traverses for Stationary Sources.

(2) Method 3—Gas Analysis for the Determination of Molecular Weight.

(3) Method 4—Determination of Moisture Content in Stack Gases.

(4) Method 7E—Determination of Nitrogen Oxides Emissions From Stationary Sources (Instrumental Analyzer Procedure).

All methods in this list appear in 40 CFR part 60, appendix A.

1.1 Analytes. *What does this method determine?*

Analyte	CAS No.	Sensitivity
Oxygen (O_2)	7782–44–7	*See* Discussion in section 1.3.
Carbon dioxide (CO_2)	124–38–9	*See* Discussion in section 1.3.

1.2 Applicability. *When is this method required?* Method 3A is a requirement in specific New Source Performance Standards, Clean Air Marketing Rules, and State Implementation Plans and Permits where measuring O_2 and CO_2 concentrations in

emissions and performance testing continuous emission monitors at stationary sources is required. Other regulations may also identify its use.

1.3 Data Quality Objectives. *How good must my collected data be?* Refer to section 1.3 of Method 7E.

2.0 Summary of Method

Using continuous or intermittent sampling, you extract a gas sample from the emissions unit under investigation. You then convey the sample to a gas analyzer and measure the concentration of O_2 or CO_2. You must adhere to the performance requirements to validate your data.

3.0 Definitions

3.1 The Analyzer Calibration Error, Calibration Curve, Calibration Gas, High-Level Gas, Mid-Level Gas, Low-Level Gas, Data Recorder, Gas Analyzer, Interference Check, Measurement System, Response Time, Sampling System, and Sampling System Bias are the same as in sections 3.0 of Method 7E.

4.0 Interferences [Reserved]

5.0 Safety

Refer to section 5.0 of Method 7E.

6.0 Equipment and Supplies

Figure 7E–1 in Method 7E is a schematic diagram of an acceptable measurement system. You must use a measurement system for O_2 and CO_2 that meets the following specifications for the essential components.

6.1 Sample Probe, Particulate Filter, Heated Sample Line, Sample Line, Moisture Removal System, Sample Pump, Flow Control/Gas Manifold, Sample Gas Manifold, and Data Recorder. You must follow the noted specifications in section 6.1 of Method 7E.

6.2 Analyzer. An instrument that continuously measures O_2 or CO_2 in the gas stream and meets the specifications in section 13.0.

7.0 Reagents and Standards

7.1 Calibration Gas. *What calibration gases do I need?* Refer to section 7.1 of Method 7E for the calibration gas requirements. You have five options for the calibration gas. The tests for analyzer calibration error and sampling system bias require span, mid-, and low-level gases.

(a) CO_2 in nitrogen (N_2).

(b) CO_2 in air.

(c) CO_2/SO_2 gas mixture in N_2.

(d) O_2/SO_2 gas mixture in N_2.

(e) $O_2/CO_2/SO_2$ gas mixture in N_2.

7.2 Interference Check. *What reagents do I need for the interference check?* Use the reagents listed in Table 7E–1 of Method 7E to conduct the interference check.

8.0 Sample Collection, Preservation, Storage, and Transport

Emission Test Procedure

8.1 Sampling Site and Sampling Points. You must follow section 8.1 of Method 7E.

8.2 Measurement System Performance Tests. You must follow the calibration gas verification, measurement system preparation, analyzer calibration error test, initial sampling system bias check, response time, Interference Check, and validation of runs procedures in sections 8.2 and 8.3 of Method 7E.

8.3 Sample Collection. Follow the procedures in section 8.4 of Method 7E.

8.4 Validation of Runs. Follow section 8.5 of Method 7E.

9.0 Quality Control

Follow quality control procedures in section 9.0 of Method 7E.

10.0 Calibration and Standardization

Follow the procedures for calibration and standardization in section 10.0 of Method 7E.

11.0 Analytical Procedures

Because sample collection and analysis are performed together (*see* section 8), additional discussion of the analytical procedure is not necessary.

12.0 Calculations and Data Analysis

You must follow the procedures for calculations and data analysis in section 12.0 of Method 7E.

13.0 Method Performance

13.1 The Analytical Range, Sensitivity, Analyzer Calibration Error, Response Time, Interference Test, and Alternative Dynamic Spike Check specifications are the same as in section 13.0 of Method 7E.

13.2 Sampling System Bias. The pre- and post-run sampling system bias must be within ±3 percent of the manufacturer certified concentration for the mid- and span-level calibration gases and less than ±0.25 percent of upper range.

14.0 Pollution Prevention [Reserved]

15.0 Waste Management [Reserved]

16.0 Alternative Procedures

16.1 Dynamic spiking procedure and manufacturer's stability test. These procedures are the same as in section 16 of Method 7E.

17.0 References

1. ''EPA Traceability Protocol for Assay and Certification of Gaseous Calibration Standards'' September 1997 as amended, EPA–600/R–97/121.

18.0 Tables, Diagrams, Flowcharts, and Validation Data

* * * * *

Method 6C—Determination of Sulfur Dioxide Emissions From Stationary Sources (Instrumental Analyzer Procedure)

1.0 Scope and Application

What is Method 6C?

Method 6C is a procedure for measuring sulfur dioxide (SO_2) in stationary source emissions using a continuous instrumental analyzer. Quality assurance and quality control requirements are included to assure that you, the tester, collect data of known quality. You must document your adherence to these specific requirements for equipment, supplies, sample collection and analysis, calculations, and data analysis. This method does not completely describe all equipment, supplies, and sampling and analytical procedures you will need but refers to other methods for some of the details. Therefore, to obtain reliable results, you should also have a thorough knowledge of these additional test methods:

(a) Method 1—Sample and Velocity Traverses for Stationary Sources.

(b) Method 3A—Determination of Oxygen and Carbon Dioxide Concentrations in Emissions from Stationary Sources (Instrumental Analyzer Procedure).

(c) Method 4—Determination of Moisture Content in Stack Gases.

(d) Method 6—Determination of Sulfur Dioxide Emissions from Stationary Sources.

All methods in this list appear in 40 CFR part 60, appendix A.

1.1 Analytes. *What does this method determine?*

Analyte	CAS No.	Sensitivity
SO_2	7446–09–5	*See* discussion in section 1.3.

1.2 Applicability. *When is this method required?* Method 6C is required in specific New Source Performance Standards, Clean Air Marketing rules, and State Implementation Plans and permits where measuring SO_2 concentrations in stationary source emissions is required. Other regulations may also require its use.

1.3 Data Quality Objectives. Refer to section 1.3 of Method 7E.

2.0 Summary of Method

In this method, you continuously sample the emission gas and convey the sample to an analyzer that measures the concentration of SO_2. Properly designed and operated analyzers based on ultraviolet, nondispersive infrared, or fluorescence detection principles have been used successfully. Analyzers based on other detection principles may be acceptable, however you must meet the performance requirements of this method regardless of type of detector principle used.

3.0 Definitions

3.1 The Analyzer Calibration Error, Calibration Curve, Direct Calibration, System Calibration, Calibration Gas, Data Recorder, Gas Analyzer, Measurement System, Range, Response Time, Sampling System Bias, and Span are the same as in sections 3.0 of Method 7E.

3.2 *Interference check* means a test intended to detect analyzer responses to things other than the compound of interest, usually a gas present in the measured gas stream, that is not adequately accounted for in the calibration procedure and hence results in excessive bias.

4.0 Interferences [Reserved]

5.0 Safety

Refer to section 5.0 of Method 7E.

6.0 Equipment and Supplies

Figure 7E–1 of Method 7E is a schematic diagram of an acceptable measurement system. You must use a measurement system for SO_2 that meets the following specifications for the essential components.

6.1 *What do I need for the measurement system?* Sample Probe, Particulate Filter, Heated Sample Line, Sample Lines, Moisture Removal System, Sample Pump, Flow Control/Gas Manifold, Sample Gas Manifold, and Data Recorder. You must follow the noted specifications in section 6.1 of Method 7E.

6.2 SO_2 Analyzer. An instrument that uses an ultraviolet, nondispersive infrared, fluorescence, or other detection principal to continuously measure SO_2 in the gas stream and meets the specifications in section 13.0. The dual-range analyzer provisions of section 6.1.8.1 of Method 7E apply.

6.3 *What additional equipment do I need for the interference check?* Use the apparatus described in section 6.0 of Method 6. Figure 6C–2 illustrates the interference check sampling train. In cases where the emission concentrations are less than 15 ppm, the alternative interference check detailed in section 16.1 should be used.

7.0 Reagents and Standards

7.1 Calibration Gas. *What calibration gases do I need?* Refer to section 7.1 of Method 7E for the calibration gas requirements.

You have five options for your calibration gas.

(a) SO_2 in nitrogen (N_2).

(b) SO_2 in air.

(c) SO_2 and CO_2 in N_2.

(d) SO_2 and O_2 in N_2.

(e) $SO_2/CO_2/O_2$ gas mixture in N_2.

7.2 Additional Calibration Gas Requirements When Using a Fluorescence Analyzer. When you use a fluorescence-based analyzer and calibration gas (c), (d), or (e), the O_2 or CO_2 concentration in your calibration gas must be within 1 percent (absolute) of the O_2 (CO_2) concentration in the effluent sample. If you use a fluorescence-based analyzer and a calibration gas that is SO_2 in air, you may use the nomographs provided by the gas vendor to determine the quenching correction factor. You must know the concentrations of O_2 and CO_2 in the effluent.

7.3 Interference Check. *What additional reagents do I need for the interference check?* Use the reagents described in section 7.0 of Method 6 to conduct the interference check. For gas concentration less than 15 ppm, the test gases for the alternative interference check are listed in Table 7E–3 of Method 7E.

7.3.1 Alternative Analyzer Interference Check. As an alternative to the above, you may conduct an alternative interference check by sequentially introducing the gases listed in Figure 7E–3 of Method 7E (one at a time) both with and without SO_2 into the calibrated analyzer and recording the apparent concentrations after waiting at least 3 times the analyzer response time. This is then repeated with a blend containing a known SO_2 concentration greater than 80 percent of the analyzer's range and calculating the difference between the known value and the apparent concentration. For each potential interferent gas, identify the largest of the 2 absolute values as the potential interference. The interference for all potential interferent gases in the source category must be less than 2.5 percent of the upper range limit to be acceptable. Record the data on a form similar to Figure 6C–8.

8.0 Sample Collection, Preservation, Storage, and Transport

Emission Test Procedure

8.1 Sampling Site and Sampling Points. You must follow section 8.1 of Method 7E.

8.2 Measurement System Performance Tests. You must follow the Calibration Gas Verification, Measurement System Preparation, Analyzer Calibration Error Test, Initial Sampling System Bias Check, and Measurement System Response Time procedures in section 8.2 of Method 7E.

8.3 Interference Check. You must conduct an interference check consisting of at least three runs before or during the initial field test of a particular source category (type of facility). This interference check must be repeated yearly on each individual gas analyzer. When testing under conditions of low concentrations (<15 ppm), the alternative interference check in section 16.1 must be used; it is an acceptable alternative in other applications. For the interference check, build the modified Method 6 sampling train (flow control valve, two midget impingers containing 3 percent H_2O_2, and dry gas meter) shown in Figure 6C–2. Connect the sampling train to the sample bypass discharge vent. Record the dry gas meter reading before you begin sampling. Simultaneously collect modified Method 6 and Method 6C samples. Open the flow control valve in the modified Method 6 train as you begin to sample with Method 6C. Adjust the Method 6 sampling rate to 1 liter per minute (±10 percent). If your modified Method 6 train does not include a pump, you risk biasing the results high if you over-pressurize the midget impingers and cause a leak. You can reduce this risk by cautiously increasing the flow rate as sampling begins. After completing a run, record the final dry gas meter reading, meter temperature, and barometric pressure. Recover and analyze the contents of the midget impingers using the procedures in Method 6. (You do not need to analyze performance audit samples with this interference check.) Determine the average valid gas concentration reported by Method 6C for the run.

8.4 Sample Collection. Follow section 8.1. Sample within 5 percent of the rate you used during the sampling system bias check

8.5 Post-Run Sampling System Bias Check and Alternative Dynamic Spike Procedure. Follow sections 8.5 and 8.6 of Method 7E.

9.0 Quality Control

Follow quality control procedures in section 9.0 of Method 7E.

10.0 Calibration and Standardization

Follow the procedures for calibration and standardization in section 10.0 of Method 7E.

11.0 Analytical Procedures

Because sample collection and analysis are performed together (*see* section 8), additional discussion of the analytical procedure is not necessary.

12.0 Calculations and Data Analysis

You must follow the procedures for calculations and data analysis in section 12.0 of Method 7E as applicable.

13.0 Method Performance

13.1 The Analytical Range, Sensitivity, System Response and Minimum Sampling Times, Analyzer Calibration Error, Sampling System Bias, and Alternative Dynamic Spike Check specifications are the same as in section 13.0 of Method 7E.

13.2 Interference Test. Documentation of successful completion, within the last 12 months at the specific source category, where the difference between the analyzer and the modified Method 6 result is less than 7 percent of the modified Method 6 result for each of a minimum of 3 runs.

13.3 Alternative Interference Check. Same as in section 13.6 of Method 7E.

14.0 Pollution Prevention [Reserved]

15.0 Waste Management [Reserved]

16.0 Alternative Procedures

16.1 Alternative Interference Check. The interference check detailed in section 8.3 of Method 7E may be used as an alternative interference check.

16.2 Dynamic Spiking Procedure, Manufacturer's Stability Test and Annual Primary Interference Recheck (as applicable). These procedures are the same as in section 16 of Method 7E.

17.0 References

1. ''EPA Traceability Protocol for Assay and Certification of Gaseous Calibration Standards'' September 1997 as amend, EPA–600/R–97/121.

18.0 Tables, Diagrams, Flowcharts, and Validation Data

BILLING CODE 6560–50–P

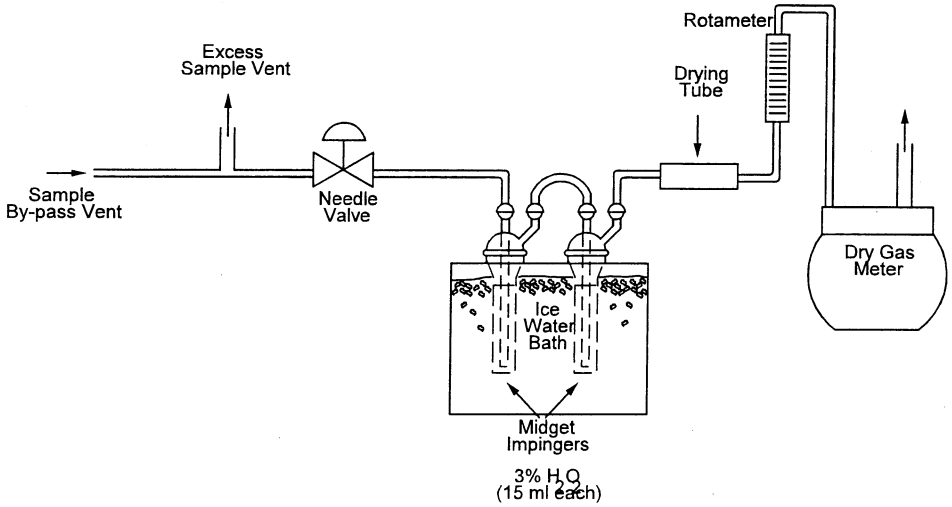

Figure 6C-1. Interference Check Sampling Train.

BILLING CODE 6560–50–C

* * * * *

Method 7E—Determination of Nitrogen Oxides Emissions From Stationary Sources (Instrumental Analyzer Procedure)

1.0 Scope and Application

What Is Method 7E?

Method 7E is a procedure for measuring nitrogen oxides (NO_X) in stationary source emissions using a continuous instrumental analyzer. Quality assurance and quality control requirements are included to assure that you, the tester, collect data of known quality. You must document your adherence to these specific requirements for equipment, supplies, sample collection and analysis, calculations, and data analysis. This method does not completely describe all equipment, supplies, and sampling and analytical procedures you will need but refers to other methods for some of the details. Therefore, to obtain reliable results, you should also have a thorough knowledge of these additional test methods:

(a) Method 1—Sample and Velocity Traverses for Stationary Sources.

(b) Method 4—Determination of Moisture Content in Stack Gases.

1.1 Analytes. *What does this method determine?* (All methods in this list appear in 40 CFR part 60, appendix A.)

Analyte	CAS No.	Sensitivity
Nitric oxide (NO)	10102–43–9	*See* discussion in section 1.3.
Nitrogen dioxide (NO_2)	10102–44–0	

1.2 Applicability. *When is this method required?* Method 7E is required in specific New Source Performance Standards, Clean Air Marketing Rules, and State Implementation Plans and Permits where measuring NO_X concentrations in stationary source emissions is required. Other regulations may also require its use.

1.3 Data Quality Objectives (DQO). *What quality of data is this method designed to produce?* The data quality objectives define the quality of data you need for the test. Method 7E is designed for determining compliance with Federal and State emission standards. For this purpose, data acceptability is evaluated through performance tests whose accuracy is determined relative to the applicable emission standard concentration. Therefore, the quality of data is emphasized at the compliance concentration levels. However, we do not intend the method to penalize you for calibrating to measure accurately emissions well below the emission limit. In applications where there is no emission limitation (*e.g.,* market-based programs), acceptable performance is based on the span instead of the emission standard. You are required to calculate and report an uncertainty estimate for your data. This encourages the use of better technology and techniques but does not require it when not needed by your DQO. This uncertainty provides data quality information for future secondary data users.

1.3.1 Data Quality Assessment. It is possible to meet the method QA/QC requirements and still not be certain you are making the correct data decision. This is a phenomena with all measurements since measurements are inherently an estimate of the true value no matter how precisely and accurately they are made. However, by separating the reporting of measured data and uncertainty estimates, the method provides the data users various options to assess the data quality when the tester deviates from the procedures. For example, the data user might decide to look at the upper uncertainty estimate if the question of concern is ''Am I sure the average emissions are less than an emission limit?'' or at the lower uncertainty estimate if the question of concern is ''Am I sure the average emissions are greater than an emission limit?'' Data of lesser quality may be accepted if the data user deems the testing objectives are met. For example, if the measured average emissions are less than the emission limit but a small fraction of the data exceeded the analyzer range, the data user may choose to accept this data as adequate to show compliance with the emission limit. The regulating agency is considered the data user and therefore makes the final assessment of data quality.

1.3.2 Data Quality Assessment for low emitters. *Is performance relief granted to low-emission units?* Yes, there are interim special sampling system bias performance criteria and allowances to use the alternative interference check and dynamic spike procedures. You should refer to section 13 for an explanation.

1.3.3 *How is the calibration designed when test units are covered by more than one*

emission limit? In most cases where an emission unit is subject to more than one emission limit, the analysis should be designed for the most stringent limit. An emission unit that is shown to be in compliance with the most stringent limit when the analysis is designed in this way is also in compliance with the other applicable limits.

2.0 Summary of Method

In this method, you continuously sample the emission gas and convey the sample to an analyzer that measures the concentration of NO_X. You may measure NO and NO_2 separately or simultaneously together but, for purposes of this method, NO_X is the sum of NO and NO_2. You must adhere to the performance requirements of this method to validate your data.

3.0 Definitions

3.1 *Analyzer calibration error* means the difference between the manufacturer certified calibration gas concentration and the concentration reported by the analyzer in direct calibration mode.

3.2 *Calibration curve* means the relationship between the analyzer's response and the concentration of the gas introduced to the analyzer over the calibration range of the analyzer.

3.2.1 *Direct Calibration* means introducing the calibration gases directly to the analyzer according to manufacturer's published calibration procedure.

3.2.2 *System Calibration* means introducing the calibration gases into the measurement system at the probe and upstream of all sample conditioning components.

3.3 *Calibration gas* means the gas mixture containing NO_X at a concentration of known pedigree and produced and certified in accordance with ''EPA Traceability Protocol for Assay and Certification of Gaseous Calibration Standards,'' September 1997, as amended August 25, 1999, EPA–600/R–97/121. The tests for analyzer calibration error and sampling system bias require a span-, mid-, and low-level calibration gases.

3.4 *Converter Efficiency Gas* means a calibration gas with a known NO_2 concentration.

3.5 *Data recorder* means the equipment that permanently records the concentrations reported by the analyzer.

3.6 *Gas analyzer* means the equipment that senses the gas being measured and generates an output proportional to its concentration.

3.7 *Interference check* means the test intended to detect analyzer responses to things other than the compound of interest, usually a gas present in the measured gas stream, that is not adequately accounted for in the calibration procedure and hence results in excessive bias.

3.8 *Measurement system* means all the equipment used to determine the NO_X concentration. The measurement system comprises six major subsystems: Acquisition, sample transport, sample conditioning, flow control/gas manifold, gas analyzer, and data recorder.

3.9 *Range* means the interval between the nominal minimum and maximum concentration that the gas analyzer manufacturer cites for the analyzer full-scale response. Gas analyzers that have single-range or multiple-range capability with either automated or manual switching are potentially acceptable. The range must be at least 5 percent greater than the concentration of the span-level gas you use to calibrate the analyzer, so that sampling system bias can be determined.

3.10 *Response time* is the time it takes the data acquisition system to read 95 percent of the stable reading from a step change in concentration when the sampling system is operating at its design flow rate.

3.11 *Sampling system bias* means the difference between the manufacturer certified calibration gas concentration and the concentration the analytical system gives for the same gas when it is introduced in system calibration mode, divided by the emission standard.

3.12 *Span* means the highest concentration of the calibration curve and is synonymous with the concentration of the highest calibration gas. In most cases, the span will be higher than the concentration of the emission standard.

4.0 Interferences [Reserved]

5.0 Safety

What safety measures should I consider when using this method? This method may require you to work with hazardous materials and in hazardous conditions. We encourage you to establish safety procedures before using this method. Among other precautions, you should become familiar with the safety recommendations in the gas analyzer user's manual. Occupational Safety and Health Administration (OSHA) regulations may also apply to you.

6.0 Equipment and Supplies

The performance criteria in this method will be met or exceeded most of the time if you are properly using equipment designed for this application.

6.1 *What do I need for the measurement system?* Figure 7E–1 is a diagram of an example measurement system. You may use alternative equipment and supplies provided (1) your sample flow rate is maintained within 5 percent of the design flow rate, (2) the probe, filter, and the sample line from the sample probe to the moisture removal system (if necessary) is constructed of materials which do not absorb or otherwise alter the sample gas and are heated to at least 140 °C (284 °F) or 25 °C (77 °F) above the concentration dew point of the sample, whichever is higher, to prevent condensation, and (3) the interference and sampling system bias criteria are met. An NO_X measurement system that meets the following specifications is likely to meet the interference and sampling system bias requirements and are provided as guidance. The essential components of the measurement system are described below:

6.1.1 Sample Probe (Stinger). Glass, stainless steel, or equivalent, of sufficient length to traverse the sample points. The sampling probe must reach all sample points and be heated to at least 140 °C (284 °F) to prevent condensation or 25 °C (77 °F) above the concentration dew point of the sample, whichever is higher.

6.1.1.1 Particulate Filter. An in-stack or out-of-stack filter. The probe filter and all flow components located at the probe must be heated to at least 140 °C (284 °F) or 25 °C (77 °F) above the dew point of the sample, whichever is higher. The filter media must be included in the sampling system bias test and be made of materials that are nonreactive to the gas being sampled.

6.1.2 Heated Sample Line. The sample line from the probe to the moisture removal system (if necessary) and to the sample pump should be made of stainless steel, teflon, or other material that does not absorb or otherwise alter the sample gas. Heat the sample line between the probe and moisture removal system to at least 140 °C (284 °F) to prevent condensation or 25 °C (77 °F) above the dew point of the sample, whichever is higher.

6.1.3 Sample Lines. Stainless steel or Teflon tubing to transport the sample from the moisture removal system to the flow control gas manifold.

6.1.4 Moisture Removal System. A thermo-electric type condenser or similar device to remove condensate continuously from the sample gas while maintaining minimal contact between the condensate and the sample gas. The gas temperature at the outlet of the drier must be <60 °F (15 °C) as measured in the drier outlet tubing, and the drier outlet gas dew point temperature must be maintained equal to or less than 41 °F (5 °C). The moisture removal system is not necessary for analyzers that measure gas concentrations on a wet basis. For these analyzers (1) heat the sample line and all sample transport components up to the inlet of the analyzer to at least 140 °C (284 °F) or 25 °C (77 °F) above the concentration dew point of the sample, whichever is higher, to prevent condensation, and (2) determine the moisture content and correct the measured gas concentrations to a dry basis using appropriate methods, subject to the approval of the Administrator. You do not need to determine sample moisture content if your analyzer measures concentration on a wet basis when (1) a wet basis CO_2 analyzer operated according to Method 3A is used to obtain simultaneous measurements, and (2) the pollutant/CO_2 measurement system is used to determine emissions in units of the standard. The wet analyzer must pass the same sampling system bias check as the dry measurement system. The sampling system bias check must include the same water (±1 percent absolute) concentration found in the sample.

6.1.5 Sample Pump. A leak-free pump to pull the sample gas through the system at a flow rate sufficient to minimize the response time of the measurement system. The pump may be constructed of any material that is nonreactive to the gas being sampled.

6.1.6 Flow Control/Gas Manifold. An assembly of manual or solenoid valves to allow the introduction of calibration gases either directly to the gas analyzer in direct mode, or into the measurement system, at the probe, in system mode. A calibration valve assembly, three-way valve assembly, or equivalent, for blocking the sample gas flow

and introducing calibration gases directly to the gas analyzers, and a valve to flow calibration gas through the entire measurement system, flooding the sampling probe when in the system mode (for bias check). Use either a flow control valve and rotameter or an equivalent valve. Use a back-pressure regulator, or equivalent, to maintain constant pressure in the sample gas manifold.

6.1.7 Sample Gas Manifold. The sample gas manifold diverts a portion of the sample to the analyzer, delivering the remainder to the by-pass discharge vent. The manifold should also be able to introduce calibration gases directly to the analyzer. The manifold must be made of material that does not react with NO_X or the calibration gas and be configured to safely discharge the bypass gas.

6.1.8 NO_X analyzer. An instrument that continuously measures NO_X in the gas stream and meets the specifications in section 13.0. Analyzers that operate on the principle of chemiluminescence with an NO_2 to NO converter have been used to successfully meet the performance criteria in the past. Analyzers operating on other principles may also be used provided the performance criteria are met.

6.1.8.1 Dual Range Analyzers. Some manufacturers may certify a gas analyzer with a single large range which you may use with proper data recorders as two separate analyzers if you use the proper sets of calibration gases and meet the interference, analyzer calibration error, and sampling system bias checks. However, we caution you that the larger range affects the sensitivity in some analyzers and this may affect your ability to meet the performance requirements when operated on the lower range.

6.1.9 Data Recording. A strip chart recorder, analog computer, digital recorder, or data logger for recording measurement data. The data recording resolution (*i.e.*, readability) must be no larger than 0.5 percent of span. Alternatively, a digital or analog meter having a resolution no larger than 0.5 percent of span may be used, and the readings may be recorded manually. If this alternative is used, the readings must be from equally spaced intervals of no more than 1 minute over the duration of the sampling run.

7.0 Reagents and Standards

7.1 Calibration Gas. *What calibration gases do I need?* Your calibration gas must be certified in accordance with ''EPA Traceability Protocol for Assay and Certification of Gaseous Calibration Standards'' September 1997, as amended August 25, 1999, EPA–600/R–97/121. The calibration gas certification (or recertification) must be complete and the test must be completed before the expiration date. The goal is to bracket the sample concentrations and have at least one calibration gas below and one above the measurements. Use a minimum of the following calibration gas concentrations:

7.1.1 Span-Level Gas. The span-level gas sets the analyzer span which is the maximum concentration that is considered potentially valid for a test.

7.1.2 Mid-Level Gas. The mid-level gas must have a concentration that is 20 to 70 percent of the concentration of the span-level gas.

7.1.3 Low-Level Gas. The low-level gas must have a concentration that is less than 20 percent of the span-level gas.

7.1.4 Converter Efficiency Gas. The converter efficiency gas must have a concentration of NO_2 that is within 50 percent of the measured NO_2 concentration.

7.2 Interference Check. *What additional reagents do I need for the interference check?* Use the test gases listed in table 7E–3 to conduct the interference check.

8.0 Sample Collection, Preservation, Storage, and Transport

Emission Test Procedure

Since you are allowed to choose different options to comply with some of the performance criteria, it is your responsibility to identify the specific options you followed, document your meeting the performance criteria and frequency for that option, or identify any deviations from the method.

8.1 *What sampling site and sampling points do I select?*

8.1.1 Unless otherwise specified in an applicable regulation or by the administrator, use the traverse points listed in and located according to Method 1. Alternatively, you may conduct a stratification test as described in section 8.1.3 to determine if fewer traverse points may be used. For performance testing of continuous emission monitoring systems, follow the sampling site procedures in the appropriate performance specification or applicable regulation.

8.1.2 General Sampling Point Requirements. Traverse all sampling points you choose from above, and sample at each point for an equal length of time. Record the sampling data. If you are comparing the data from individual traverse points as in the stratification test, you must delay recording data at each point for 2 times the system response time. The minimum time you must sample at each point is 2 times the system response time. You must record data at least every minute. Usually the test is designed for sampling longer than 1 minute per point to better characterize the source's temporal variability. If the test is designed such that the sampling time for each point is greater than 10 times the system response time, then you may start recording data at the first traverse point after purging the system at least 2 times the system response time. After recording for the designed period of time, you may move to the next traverse point and continue recording, omitting the requirement to delay recording for 2 times the system response at the subsequent traverse points. However, you must recondition the sampling system for at least 2 times the system response time prior to recording at the next traverse point if you remove the probe from the stack. You may satisfy the multipoint traverse requirement by sampling sequentially using a single-hole probe or a multi-hole probe designed to sample from each hole at the same (±10 percent of mean) flow rate.

8.1.3 Determination of Stratification. If the results of a stratification test show your unit to be unstratified, you may traverse at fewer points than required by Method 1. To test for stratification, use a probe of appropriate length to measure the NO_X and diluent (O_2 or CO_2) concentrations at each traverse point selected according to Method 1. Calculate the individual point and mean NO_X concentrations, corrected for diluent. If the range of average dilution-corrected concentrations for all points is less than or equal to ±5 percent of the mean concentration, you may collect samples from a single point that most closely matches the mean. Alternatively, if the range of the individual traverse point concentrations, corrected for dilution, is equal to or less than ±10 percent of the mean, you may take samples from 3 or more points on one diameter provided the points are located on the diameter of the stack exhibiting the highest average concentration during the stratification test. Space the points at 16.7, 50.0, and 83.3 percent of the measurement line (*i.e.,* divide the diameter into equal length segments and sample at their midpoints.)

8.2 Measurement System Performance Tests. *What initial performance criteria must my system meet before I begin collecting samples?* Before measuring emissions, perform the following procedures:

a. Calibration gas verification;

b. Measurement system preparation and analyzer calibration error test;

c. NO_2 to NO conversion efficiency test, if applicable;

d. Initial sampling system bias check;

e. System response time test; and

f. Interference check.

8.2.1 Calibration gas verification. *How must I verify the concentrations of my calibration gases?* Obtain a certificate from the gas manufacturer and confirm that the documentation includes all information required by the Traceability Protocol. Confirm that the manufacturer certification is complete and current.

8.2.2 Measurement system preparation. *How do I prepare my measurement system?* Assemble, prepare, and precondition the measurement system according to your standard operating procedure. Achieve the correct sampling rate. Ensure that your calibration gases are in the proper range and will result in the measured emissions being between 20 and 100 percent of the span. Perform a direct calibration of the gas analyzer (*see* section 10.1), and conduct the analyzer calibration error test.

8.2.3 Analyzer Calibration Error Test. *How do I confirm my analyzer calibration is correct?* After you have calibrated your analyzer according to the manufacturer recommended procedure, you must conduct an analyzer calibration error test before the first run and again after any failed sampling system bias tests. In this test you introduce the same low-, mid-, and span gases (that you just used to calibrate the analyzer in direct calibration mode) into the measurement system at any point upstream of the analyzer but preferably again in direct calibration mode. You must maintain the correct flow rate at the analyzer, but do not make adjustments for any other purpose. Record the analyzer's response to each calibration gas on a form similar to table 7E–1. For each calibration gas, calculate the analyzer

calibration error as the difference between the measured concentration and the manufacturer certified concentration. The difference should be less than 2 percent of the manufacturer certified concentration for the low-, mid-, and span gases.

8.2.4 NO_2 to NO Conversion Efficiency Test. You must conduct an NO_2 to NO conversion efficiency test on all analyzers whose measurement principal converts NO_2 to NO before analyzing for NO_X. Introduce a known concentration of NO_2 to the analyzer in direct calibration mode and record the stable gas concentration displayed by the analyzer. (**Note:** Because the measurement data uncertainty calculation adjusts for converter efficiencies less than 100 percent and because the converter efficiency may change with concentration, we suggest the known concentration introduced be within a range of 50–150 percent of the average measured concentration.) Alternatively, the procedure for determining conversion efficiency using NO in 40 CFR 86.123–78 may be used. For those analyzers whose measurement principal detects NO_2 in the sample directly without a converter, this requirement is waived because the calibration gas requirements will assure adequate accounting for NO_2.

8.2.5 Initial Sampling System Bias Check. Begin by introducing the span-level calibration gas (or mid-level gas if closer to the emissions concentration) in system calibration mode. Record the gas concentration displayed by the analyzer and the time it takes to reach a stable value on a form similar to Table 7E–2. A value is considered stable when the maximum difference between 3 consecutive recordings is not more than 0.5 percent of certified value and the mean is at least 97 percent of the certified value. Then introduce the zero gas in system calibration mode and similarly record the gas concentration displayed by the analyzer and the time it takes the measurement system to decrease to a stable zero value from the higher value. Operate the measurement system at the normal sampling rate. Make only the adjustments necessary to achieve proper calibration gas flow rates at the analyzer. First, calculate the measurement system response time (*see* section 8.2.6) and then calculate the sampling system bias (*see* section 12.5). *See* sections 13.3 and 13.5 for acceptable performance criteria. If sampling system bias is excessive, take corrective action until an acceptable performance is achieved. You must repeat the analyzer calibration error test and sampling system bias check whenever a sampling system bias check is excessive. You must also repeat the sampling system bias check at the end of each run.

8.2.6 Measurement System Response Time. You must determine the measurement system response time during the initial sampling system bias check. Observe the times required to achieve 95 percent of a stable response for both the low- and high-level gases. The longer interval is the response time.

8.3 Interference Check. Conduct an interference response test of the gas analyzer prior to its initial use in the field. Recheck the analyzer if you make changes that could alter the interference response (*e.g.*, a change in the gas detector). You can introduce the interference test gases (*see* Table 7E–3) into the measurement system separately or as mixtures. This test must be performed both with and without NO_X (NO and NO_2) which should be at a concentration of at least 80 percent of the analyzer range. Measure the total interference response of the system to these gases in ppmv. Record the responses and determine the interference using Table 7E–4. A copy of this data including the date completed and signed certification must be included. This interference test is valid for 1 calendar year unless major analytical components are replaced. If major components are replaced, the annual primary interference gas recheck described in section 16.3 must be performed before returning the analyzer to service. You must conduct the primary interference gas recheck on an annual basis.

8.4 Sample Collection. Collect samples following section 8.1. Sample within 5 percent of the rate you used during the sampling system bias check.

8.5 Post-Run Sampling System Bias Check. *How do I confirm that each sample I collect is valid?* After each run, repeat the sampling system bias check to validate the run. Do not make adjustments (other than to attain the design sampling rate) to the measurement system between the run and completion of the sampling system bias check. If you do not pass this post-run sampling system bias test, then the run does not meet this method?s quality assurance. To meet this method's quality assurance requirements, you must fix the problem, pass another analyzer calibration error test and sampling system bias test before repeating the run. Record the bias test results on a form similar to Table 7E–2.

8.6 Alternative Dynamic Spike Procedure. *If I want to use the dynamic spike procedure to validate my data, what procedure should I follow?* You may comply with the dynamic spiking procedure and requirements provided in section 16.2 during each test as an alternative to the analyzer calibration error test and the pre- and post-run sampling system bias checks.

9.0 Quality Control

What is a summary of the quality control measures I must take?

SUMMARY TABLE OF QA/QC

Status	Process or element	QA/QC specification	Acceptance criteria	Checking frequency	Suggested corrective action
S [1]	Identify Data User		Regulatory Agency or other primary end user of data.	Before designing test.	
M [2]	Analyzer Design	Analyzer range	Sufficiently > than span-level gas to determine sampling system bias.		Use different analyzer or reduce span value.
S		Analyzer resolution or sensitivity.	< 2% of range	Manufacturer design	Use different analyzer.
S		Analyzer response time	< 30 Seconds.		
M		Interference gas check	< 2.5% of upper range limit *See* Table 7E–3.	Valid for 1 year.	
M	Calibration Gases	Traceability protocol (G1, G2).	Valid certificate uncertainty < 2%.		Recertify; new standard.
M		Span-level limit	Chosen so measurements are all ≤ span.	Each run	Use a different cylinder.
M		Mid-level limit	20 to 70% of span-level gas.	Each run	Use a different cylinder.
M		Low-level limit	< 20% of span-level gas	Each run	Use a different cylinder.
S	Data Recorder Design	Data resolution	< 1% of span	Manufacturer design	Replace recorder.
S	Sample Extraction	Probe material	SS or quartz if stack > 500° F.	Each run	Replace material.
M	Sample Extraction	Probe temperature	Heated > 140° C or 25° C greater than the dew point.	Each run	Adjust temperature.

SUMMARY TABLE OF QA/QC—Continued

Status	Process or element	QA/QC specification	Acceptance criteria	Checking frequency	Suggested corrective action
M	Analyzer & Calibration Gas Performance.	Analyzer calibration error.	< 2 percent of the manufacturer certified concentration for the mid- and span-level calibration gases (or 2 percent of span if not subject to an emission standard); for the zero gas less than ±0.25% of span.	Before initial run and after failed sampling system bias test.	Fix problem; retest.
M	System Performance	Sampling system bias	5% of std for high-level and zero gas; where emission std is ≤ 10 ppmv, there is a temporary alternative if the absolute value of the bias is ≤0.50 ppmv.	Before/after each run	Fix problem; retest.
M	System Performance	System response time	Determines minimum sampling time per point.	During initial sampling system bias test.	
M	System Performance	NO_2–NO conversion efficiency.	> 90% of certified value	After every test	Fix problem or replace equipment.
M	System Performance	Minimum sample time	2 times the system response time plus purge time.	Each sample point.	
M	System Performance	Stable sample flow rate (surrogate for maintaining system response time).	< ±5% of required flow	Each run	Adjust flow.
M	Sample Point Selection	Follow Method 1 OR.			
A		Stratification test	< 5% of mean = 1-point < 10% of mean = 3-point	Prior to or during first run.	Relocate or follow Method 1.
A	Multiple Sample Points Simultaneously.	No. of openings in probe	Single or multihole (rake).	Each run	Change the number.
M	Sample Line	Line material & temp (before dryer).	SS ≥140° C, or 25° C greater than the dew point until moisture removed.	Each run	Adjust temperature.
S		Line material & temp(after dryer).	SS or PTFE; no heat req'd after dryer.	Each run.	
S	Calibration Valve	Material	SS	Each run	Replace valve.
S	Sample Pump	Material	Inert to sample constituents.	Verified if sampling system bias test is passed.	Replace pump.
S	Manifolding	Material	Inert to sample constituents.	Verified if bias test is passed.	Replace.
S	Moisture Removal	Equipment type (condenser or permeation dryer).	< ±5% target compound removal.	Verified if bias test is passed.	Replace equipment.
S	Particulate Removal	Inertness of filter	Pass sampling system bias test.	Verified if bias test is passed.	Replace filter.
S		Filter temperature	Maintained > 95 °C.		
M	Data Recording	Frequency	≤ 1 minute average	During run	Remeasure.
M	Data Parameters	Sample concentration range.	All 1-minute averages within analyzer range.	Each run	Note in report.
M	Data Quality Assessment Using Sampling System Bias Data.	Calculate upper and lower uncertainty limits for each *run* using the mean measured data, converter efficiency, and the largest and smallest sampling system bias for that run.	Additional requirement is that the apparent bias must be between ±5% of emission limit equivalent concentration or < 1.5 ppmv. *See* section 12.5 for equations and conditions.	Each Run.	

SUMMARY TABLE OF QA/QC—Continued

Status	Process or element	QA/QC specification	Acceptance criteria	Checking frequency	Suggested corrective action
M–A[3]	Alternative Data Quality Check.	Dynamic spike	>5 1-min avgs. with average 100 ±5% recovery for pretest and 100 ±10% for post-test or ≤0.2 ppmv. See section 12.3 for equation.	Before and after each *test* & in place of pre- and post-*run* sampling system bias tests and interference check.	Redo after correcting problem, retest.
M–A	Data Quality Assessment Using Dynamic spike Recovery data.	Calculate upper and lower uncertainty limits for each *test* using the mean measured data, and converter efficiency and the largest (and smallest) spike recovery.	*See* section 12.6.2 for equations and conditions.	Each *test.*	

[1] S = Suggested.
[2] M = Mandatory.
[3] A = * * *.

10.0 Calibration and Standardization

What Measurement System Calibrations Are Required?

10.1 Initial Analyzer Calibration. You may introduce the calibration gases in any sequence. Make all necessary adjustments to calibrate the gas analyzer and data recorder. If your analyzer measures NO and NO_2 separately, then you must use both NO and NO_2 calibration gases. You may use a non-linear calibration curve to convert your gas analyzer's response to the equivalent gas concentration. However, you must establish the non-linear calibration curve before conducting the analyzer calibration error test. If you use a non-linear calibration curve, you must use it for all sample and calibration measurements. You must also include a copy of the manufacturer's certification of the calibration gases which include the 13 documentation requirements in the EPA Traceability Protocol For Assay and Certification of Gaseous Calibration Standards, September 1997, as amended August 25, 1999 (*http://www.epa.gov/ttn/emc/*) as part of the test report. Then you must pass the analyzer calibration error check. In addition, unless you follow the alternative dynamic spiking option, you must pass the sampling system bias test before you start measurements.

11.0 Analytical Procedures

Because sample collection and analysis are performed together (*see* section 8), additional discussion of the analytical procedure is not necessary.

12.0 Calculations and Data Analysis

12.1 Nomenclature. The terms used in the equations are defined as follows:

B = Sampling system bias.

B_{WS} = Moisture content of sample gas as measured with Method 4 or other approved method, percent/100.

C_{adj} = Pollutant concentration corrected to 15 percent O_2 ppmv.

C_d = Pollutant or diluent concentration adjusted to dry conditions, ppmv or percent.

C_{dir} = Direct calibration concentration (ppmv) of a calibration gas, dry basis, reported by gas analyzer.

C_h = Concentration (ppmv) corresponding to the emission standard (determined in section 12.1.1).

C_s = System calibration concentration (ppmv) of a calibration gas, dry basis, reported by gas analyzer.

C_v = Manufacturer certified concentration (ppmv) of a calibration gas, dry basis.

C_w = Pollutant or diluent concentration measured under moist sample conditions, ppmv, percent, or ng/sm^3 (lb/scf).

$\%CO_2$ = Measured CO_2 concentration measured, dry basis, percent.

$\%CO_{2w}$ = Measured CO_2 concentration measured on a moist sample basis, percent.

DF = Dilution factor of the spike gas; this value shall be ≧10.

E = Mass emission rate of pollutant per gross calorific value of the fuel from Method 19, ng/J (lb/10^6 Btu).

Eff_{NO2} = NO_2 to NO converter efficiency.

F_c = Ratio of the volume of carbon dioxide produced to the gross calorific value of the fuel from Method 19, dsm^3/J (dscf/10^6 Btu).

F_d = Ratio of the volume of dry effluent gas to the gross calorific value of the fuel from Method 19, dsm^3/J (dscf/10^6 Btu).

F_o = Fuel factor based on the ratio of oxygen volume to the ultimate CO_2 volume produced by the fuel at zero percent excess air, dimensionless.

GCV = Gross calorific value of the fuel consistent with the ultimate analysis, kJ/kg (Btu/lb).

K = Conversion factor.

M = Mass of $_{NOx}$.

$\%O_2$ = Measured O_2 concentration dry basis, percent.

$SF_{6(dir)}$ = SF_6 (or tracer gas) concentration measured directly in undiluted spike gas.

$SF_{6(spk)}$ = Diluted SF_6 (or tracer gas) concentration measured in a spiked sample.

$Spike_{dir}$ = Concentration of NO_X in the spike standard measured in direct calibration mode.

X_{CO2} = CO_2 correction factor, percent.

0.209 = Fraction of air that is oxygen, percent/100.

5.9 = 20.9 percent O_2 − 15 percent O_2, the defined O_2 correction value, percent.

12.1.1 Concentration equivalent of the emission standard. *What if my emission standard is not in units of concentration?*

BILLING CODE 6560–250–P

If the process is a combustion process using air	*And the Standard is in these units:*	*Then to get approximate equivalent concentration at stack conditions use the following equation and your best estimate of parameters required*
	ppmv @Y %O2	$C_{equiv} = C_{std}\frac{20.9 - \%O_2}{20.9 - Y}$
	mass/GCV (e.g. lb/million Btu heat input)	$C_{equiv} = \frac{E_{std}}{K*F_d}\frac{20.9 - \%O_2}{20.9}$
	mass per hour	$C_{equiv} = \frac{Emass/hr}{(GCV/hr)(K)F_d}\frac{20.9 - \%O_2}{20.9}$
	mass/unit of electrical output	$C_{equiv} = Eff\frac{Emass/output}{(GCV/hr)(K)F_d}\frac{20.9 - \%O_2}{20.9}$

BILLING CODE 6560–50–C

12.2 Analyzer Calibration Error Test. Use Equation 7E–1 to calculate the analyzer calibration error for each calibration gas.

$$ACE = C_{dir} - C_v \qquad \text{Eq. 7E-1}$$

12.3 Alternative Dynamic Spike Recovery. Use Equation 7E–2 to calculate the alternative dynamic spike recovery.

$$R = \frac{M_{measured} - M_{native}}{M_{added}} \qquad \text{Eq. 7E-2}$$

12.4 Sampling System Bias Check. Use Equation 7E–3 to calculate the sampling system bias for each calibration gas.

$$B = \frac{C_s - C_v}{C_v} \qquad \text{Eq. 7E-3}$$

12.5 NO_2–NO Conversion Efficiency. Use Equation 7E–4 to calculate the NO_2 to NO converter efficiency.

$$Eff_{NO_2} = C_{dir} \div C_v \qquad \text{Eq. 7E-4}$$

12.6 Uncertainty Estimate.

12.6.1 Using the largest (and smallest) bias value obtained in the pre- and/or post-run sampling system bias test, calculate and report an upper and lower uncertainty interval around each run average concentration using Equation 7E–5.

$$U = [1/(1+B)]C_m + [1 - E_{NO_2}]C_{NO_2} \qquad \text{Eq. 7E-5}$$

12.6.2 Using the largest (and smallest) recovery obtained in the pre- and post-test ADSC, calculate and report an upper and lower uncertainty interval around the test average concentration using Equation 7E–6.

$$U = \left[\frac{1}{R}\right]C_m + [1 - E_{NO_2}]C_{NO_2} \qquad \text{Eq. 7E-6}$$

12.7 Miscellaneous calculations.

12.7.1 Moisture Correction. The data you use for most of the calculations must be on a dry basis. Use Equation 7E–7 if any of your measurements need to be corrected to a dry basis.

$$C_d = \frac{C_w}{1 - B_{ws}} \qquad \text{Eq. 7E-7}$$

12.7.2 Using CO_2 as the diluent monitor. You must have an equivalent CO_2 correction factor if pollutant concentrations are to be corrected to 15 percent O_2 and you measure CO_2 concentration in lieu of O2 concentration. Perform the following procedures to calculate the CO_2 correction factor.

12.7.2.1 Using the values obtained from section 12.3.2 of Method 19 and Equation 7E–8, calculate the fuel-specific F_O value for the fuel burned during the test.

$$F_o = 0.209\frac{F_d}{F_c} \qquad \text{Eq. 7E-8}$$

12.7.2.2 Use Equation 7E–9 to calculate the equivalent CO_2 correction factor for correcting measurement data to 15 percent O_2.

$$X_{CO_2} = \frac{20.9-15}{F_o} \qquad \text{Eq. 7E-9}$$

12.7.2.3 Correct the pollutant concentrations to 15 percent O_2 equivalent. Using Equations 7E–10, calculate the NO_X gas concentrations adjusted to 15 percent O_2. The correction to 15 percent O2 is very sensitive to the accuracy of the O_2 or CO_2 concentration measurement. Therefore, oxygen or CO_2 analyzer stability and careful calibration are necessary.

$$C_{adj} = C_d\frac{X_{CO_2}}{\%CO_2} \qquad \text{Eq. 7E-10}$$

12.7.3 Dilution Adjustment of Pollutant Concentration Using O_2 Concentration. Use Equation 7E–11 to calculate the concentration adjusted to 15 percent O_2.

$$C_{adj} = C_d\frac{20.9-15}{20.9-\%O_2} \qquad \text{Eq. 7E-11}$$

12.7.4 Average Adjusted NO_X Concentration. To calculate the average adjusted NO_X concentration, sum the adjusted values for each sample point and divide by the number of points (k) for each run using Equation 7E–12.

$$\overline{C}_{adj} = \sum_1^k\left[\frac{1}{k}\sum_1^k C_{adj}\right] \qquad \text{Eq. 7E-12}$$

12.7.5 NO_X Emission Rate Calculations. Calculate the emission rates for NO_X in units of pollutant mass per quantity of heat input using the pollutant and diluent concentrations and fuel-specific F-factors based on the fuel combustion characteristics. You must convert the measured concentrations of pollutant from parts per million by volume (ppmv) to mass per unit volume. *See* Table 7E–2 for conversion factors.

TABLE 7E–2.—CONVERSION FACTORS FOR CONCENTRATION

From	To	Multiply by conversion factor (CV)
g/sm³	ng/sm³	10^9
mg/sm³	ng/sm³	10^6
lb/scf	ng/sm³	1.602×10^{13}
ppmv (NO_X)	ng/sm³	1.912×10^6
ppmv (NO_X)	lb/scf	1.194×10^{-7}

12.7.5.1 Calculation of Emission Rate Using Oxygen Correction. The O_2 concentration and pollutant concentration must be on a dry basis. Use Equation 7E–13 to calculate the pollutant emission rate in units of mass NO_X per unit of heat input.

$$E = C_dF_d\frac{20.9}{20.9-\%O_2} \qquad \text{Eq. 7E-13}$$

12.7.5.2 Calculation of Emission Rate Using Carbon Dioxide Correction. The CO_2 concentration and the pollutant concentration may be on either a wet basis or a dry basis. Both concentrations must be on the same basis for the calculations. Use Equation 7E–14 or 7E–15 to calculate the pollutant emission rate in units of mass NO_X per unit of heat input.

$$E = C_dF_c\frac{100}{\%CO_2} \qquad \text{Eq. 7E-14}$$

$$E = C_wF_c\frac{100}{\%CO_{2w}} \qquad \text{Eq. 7E-15}$$

12.7.5.3 Calculation of mass emission rate using fuel usage rate and F-Factors. Use Equation 7E–16

$$\text{Emass} = E(GCV)(Qfuel) \qquad \text{Eq. 7E-16}$$

13.0 Method Performance

13.1 Analytical Range. Your span-level calibration gas sets the upper limit of your instrument's calibration. Choose the span-level calibration gas that would result in the sampled gases being on-scale and averaging 20–100 percent of the span. If at any time during a run a measured 1-minute average gas concentration exceeds the span, you must at a minimum identify and report these minutes as deviations of the method. Depending on the data quality objectives of the sampling program, this event may require additional corrective action before proceeding with the test program. *See* section 1.3.1 for discussion.

13.2 Sensitivity. *See* discussion in section 1.3.1.

13.3 System Response and Minimum Sampling Times. The system response time determines the minimum sampling time at each sampling point. There is no minimum system response time specified, however the minimum sampling time per sample point is 2 times the system response time plus purge time. For example, if you use a sampling system with a 2 minute system response time, this means that in addition to purging the system for at least 4 minutes, you must record a minimum of 4 one-minute averages at each sample point.

13.4 Analyzer Calibration Error. The difference between the direct calibration response and the manufacturer certified concentration must be less than ±2 percent of the manufacturer certified concentration for the low-, mid- and span-level calibration gases and ±0.25 percent of analyzer upper range limit for the zero gas.

13.5 Sampling System Bias. The pre- and post-run sampling system bias must be within ±5 percent of the concentration equivalent of the emission standard (or ±5 percent of span if not subject to an emission standard) for the low- and span-level (or mid-level, as applicable) calibration gases. However, for test facilities with emission standards equivalent to 10.0 ppmv or less, if the absolute value of the bias is less than or equal to 0.50 ppmv, then the requirements of the sampling system bias test are satisfied. This provision for low-standard facilities is valid only for tests completed within 3 years of the effective date of this amendment's promulgation.

13.6 Interference Check. The interference response must not be greater than 2.5 percent of the analyzer upper range limit.

13.7 NO2 to NO Conversion Efficiency Test (as applicable). The conversion efficiency must be greater than 90 percent of the certified value of the test gas.

13.8 Alternative Dynamic Spike Check (ADSC). If your analyzer has been certified through the manufacturer's stability test, you may substitute a pre- and post-test ADSC for the interference check and pre- and post-run sampling system bias checks. Recoveries of both pre-test spikes must be within 100 ±5 percent . Recoveries of both the post-test ADSC spikes must be within 100 ±10 percent. If the absolute difference between the calculated spike value (CS) and measured spike value (Cm) is equal to or less than 0.20 ppmv, then the requirements of the ADSC are met. This provision for low-standard facilities is valid only for tests completed within 3 years of the effective date of this amendment's promulgation.

14.0 Pollution Prevention [Reserved]

15.0 Waste Management [Reserved]

16.0 Alternative Procedures

16.1 Dynamic Spiking Procedure. You may choose to validate your test data with this alternative dynamic spiking procedure. You must meet the following requirements to use this option.

16.1.1 You must certify that you followed a written procedure and have demonstrated ability, within the last calender year, to operate the spiking system following that written procedure in either a simulated or actual application. Demonstrated ability means that you have operated the spiking system at a target concentration equal to or less than the target concentration for this test and obtained a data set of 30 1-minute averages with a mass recovery of 100 ±5 percent of the mass of NO_X spiked with a relative standard deviation of those 30 1-minute averages equal or less than 5 percent.

16.1.2 Spiking procedure requirements. You must follow the written procedure that you have demonstrated your ability to perform. The volume of the spike gas added must be less than 10 percent of the total volume. The dynamic spiking procedure must be done before the first run and repeated after the last run of the test program. However, the pre-test requirement is waived if you provide a valid certification that the analyzer has been shown to meet the manufacturer's stability test in section 16.2 below. Both the pre- and post-test must consist of 2 target levels. One level must add between 1 and 2 time the native mass and the other level must add between 5 and 1 times the native stack NO_X mass in the sample stream. The spikes must be prepared from a gas certified by the traceability protocol (G1 or G2) to contain NO_X of known concentration with an uncertainty equal to or

less than 2 percent. The minimum number of datum to represent each target concentration are 5; we strongly suggest more since you must calculate and report an uncertainty range around the measured concentration based on these recoveries. If the recovery is outside 100 ±10 percent, then the reason for the bias should be determined and reported. As a condition of your using this option, you must document and confirm that during the entire test you operated within the ambient temperature and pressure and voltage ranges certified by the manufacturer. You must also list all manufacturer fault and alarm codes and identify any that were activated during the test.

16.1.3 Example spiking procedure using a tracer gas. Introduce the spike/tracer gas at a constant flow rate of 10 percent of the total sample flow. (**Note:** Use the rotameter at the end of the sampling train to estimate the required spike/tracer gas flow rate.) Use a mass flow meter (±2 percent), to monitor the spike flow rate. Record the spike flow rate every 1 minute. Wait for at least 2 times the response time T, then record at least 5 successive 1 minute averages of the spiked sample gas. The spiked concentration shall be within 5 percent of the mean of the 5 measurements. Calculate the dilution factor using the tracer gas as follows:

$$DF = \frac{SF_{6\,(direct)}}{SF_{6\,(spike)}} \qquad \text{Eq. 7E-17}$$

$$CS = \frac{Spike_{dir}}{DF} \qquad \text{Eq. 7E-18}$$

16.2 Manufacturer's Stability Test. Subject each analyzer model to a range of potential effects to demonstrate its stability following the procedures provided in 40 CFR 53.23, 53.55, and 53.56 and provide the information in a summary format. A copy of this information must be included in each test report.

16.3 Annual Primary Interference Gas Recheck. Perform an interference gas check using the 4 primary interference gases identified in the manufacturer's stability test on an annual basis, when indicated as corrective action by an alarm or fault and, whenever major component repairs are required. Record the responses. For each of the 4 primary interference gases, the 95 percent confidence interval determined in the manufacturer stability test must include the abbreviated interference gas check value prior to returning the analyzer to service.

17.0 References

1. ''EPA Traceability Protocol for Assay and Certification of Gaseous Calibration Standards' September 1997 as amended, EPA–600/R–97/121.

18.0 Tables, Diagrams, Flowcharts, and Validation Data

BILLING CODE 6560–50–P

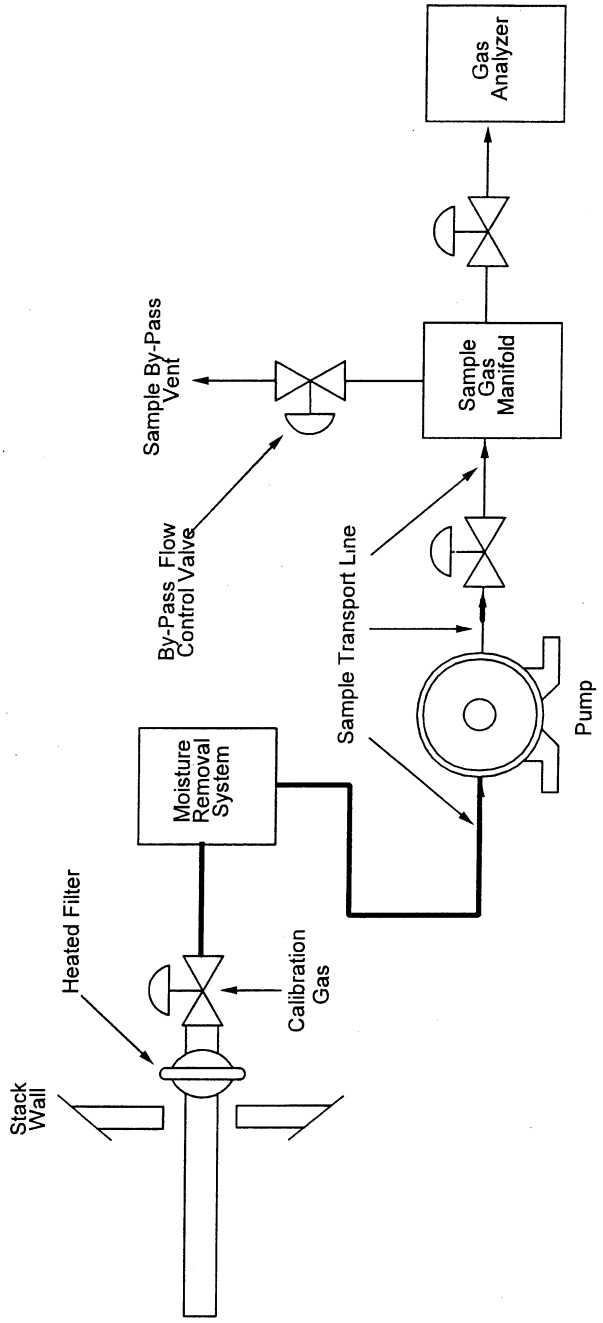

Figure 7E-1. Measurement System.

Figure 7E-2. Testing Flow Chart

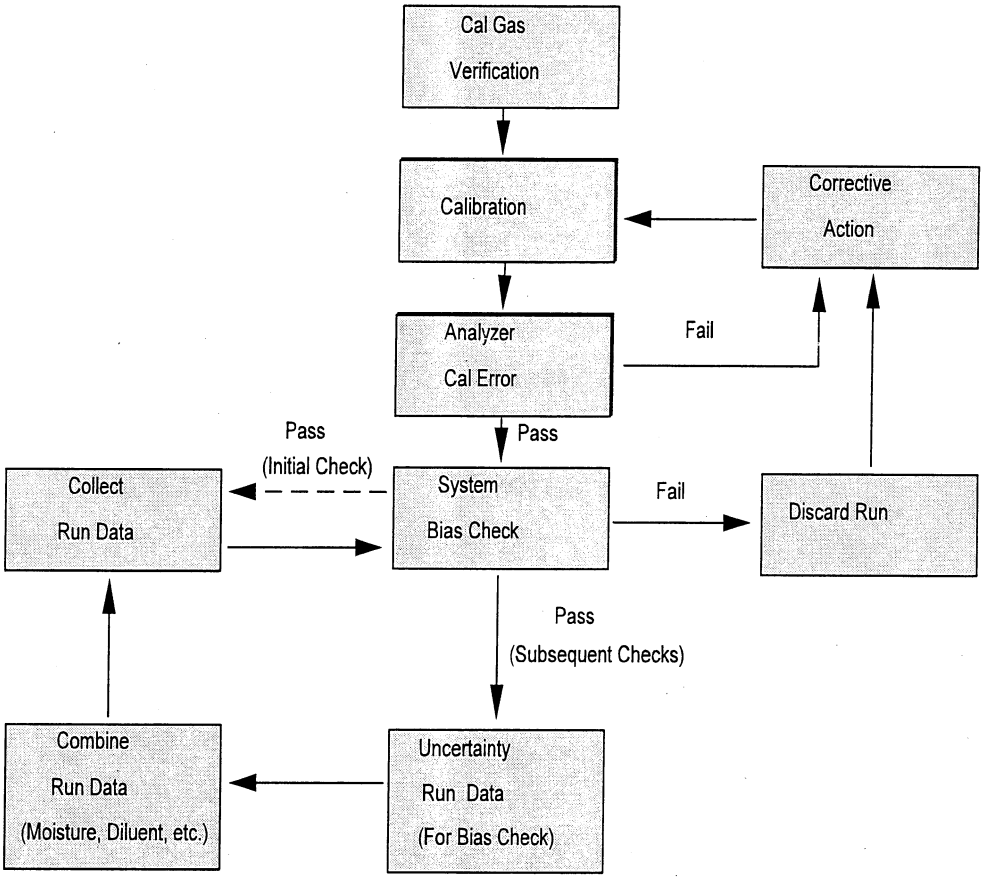

BILLING CODE 6560–50–C

TABLE 7E–1.—ANALYZER CALIBRATION ERROR DATA

Source identification: _____
Test personnel: _____
Date: _____ Time: _____

Analyzer calibration error data for sampling runs: _____
Analyzer model No. _____ Serial No. _____

	Manufacturer certified cylinder value (indicate units)	Analyzer calibration response (indicate units)	Absolute difference (indicate units)	Percent difference
	A	B	|A–B|	[|A–B|]*100
Low calibration gas				
Mid-level caliberation gas				
Span-level calibration gas				

TABLE 7E–2.—SAMPLING SYSTEM BIAS CHECK DATA

Source identification: _____ Run number: _____
Test personnel: _____ Emission std: _____ Concentration equivalent: _____
Date: _____ Response time: _____
Analyzer model No. _____ Serial No. _____

	Calibration gas value (ppmv)	Initial values		Final values	
		System response (ppmv)	System bias (percent of emission std. equivalent)	System response (ppmv)	System bias (percent of emission std. equivalent)
Low-level gas					
Span- (or mid-) level gas					

BILLING CODE 6560–50–P

Table 7E-3. Interference Check

Potential Interferent Gas	Sample Conditioning Type			
		Hot Wet	Dried	Diluted
		Interferent Target Concentration		
CO2		5 and 15%	5 and 15%	Note 1
H2O		25%	1 %	
NO		15 ppmv	15 ppmv	
NO2		15 ppmv	15 ppmv	
N2O		10 ppmv	10 ppmv	
CO		50 ppmv	50 ppmv	
NH3		10 ppmv	10 ppmv	
CH4		50 ppmv	50 ppmv	
SO2		20 ppmv	20 ppmv	
H2		50 ppmv	50 ppmv	
HCl		10 ppmv	10 ppmv	
Total Interference	± 2.5 % of upper range limit or ± 0.5 ppmv for 0-20 ppmv range, or ± 0.2 ppmv for 0-5 range			

Notes: 1) Use the Hot Wet concentrations divided by the minimum dilution ratio specified for the system.

2) Any of the above specific gases can be eliminated or tested at a lower level if the manufacturer has provided reliable means for limiting or scrubbing that gas to a specified level.

Table 7E-4 - Interference Response

Date of Test _____
Analyzer Type _____
Model No. _____
Serial No. _____

Test Gas Type	Concentration (ppm)	Analyzer Output Response	Difference
		Total Difference	
		% of Range Limit	
		2.5 % of Upper Range	

BILLING CODE 6560–50–C

TABLE 7E–5.—MANUFACTURER STABILITY TEST

Test description	Analyzer model test frequency			Acceptance criteria
	Annual (or 1st quarter)	Quarterly or not to exceed 50 production units	Each analyzer	
Thermal Stability	X			Temperature range when drift does not exceed 3% of analyzer range over a 2-hour run when measured with NO_X present @ ≥80% of range.
Fault Conditions	X			Note 1.
Alarm Conditions	X			Note 2.
Interference Gas Test	X	X		1. $I_{(annual)}$ ≤2.5% of range. 2. $I_{(quarterly)} \leq I_{(annual)}$.
Insensitivity to Supply Voltage Variations.	X	X		1. Both ±10% of nominal voltage (or the manufacturer specified range) must produce no more than 2% of range drift at either 0 or with No_X present >80% of range. 2. $Drift_{(quarterly)} \leq Drift_{(annual)}$.
Analyzer Calibration Error	X	X	X	For a low, medium, and span gas, the difference between manufacturer certified value and analyzer response in direct calibration mode, no more than 2% of manufacturer certified value.
Analyzer Response Time	X	X	X	$RT_{(individual)}$ & $RT_{(quarterly)} \leq RT_{(annual)}$.
Intrinsic Source Gas Analyzer Settings/Adjustments.	X	X		1. Identify (annually). 2. $Settings_{(quart)} \leq setting_{(annual)}$.
Primary 4 Interference Gas Test		X	X	1. $I_{(annual4)} \leq 2.5\%$ of range. 2. Each analyzer measured response must be ≤ the response obtained from the annual analyzer test for each of the 4 gases.

Note 1: Identify conditions which, when they occur, are deemed by the manufacturer to result in performance which is not in compliance with this performance specification. These are to be indicated both audibly or visually and electrically. The annual test must document that these indicators correlate with the intended fault condition.

Note 2: Identify conditions which, when they occur, the manufacturer recommends review and/or corrective action by trained service personnel to prevent further deterioration of analyzer performance that could result in performance which is not in compliance with this performance specification. These are to be indicated both audibly or visually and electrically. The annual test must document that these alarms correlate with the intended alarm condition.

* * * * *

Method 10—Determination of Carbon Monoxide Emissions From Stationary Sources (Instrumental Analyzer Procedure)

1.0 Scope and Application

What Is Method 10?

Method 10 is a procedure for measuring carbon monoxide (CO) in stationary source emissions using a continuous instrumental analyzer. Quality assurance and quality control requirements are included to assure that you, the tester, collect data of known quality. You must document your adherence to these specific requirements for equipment, supplies, sample collection and analysis, calculations, and data analysis. This method does not completely describe all equipment, supplies, and sampling and analytical procedures you will need but refers to other methods for some of the details. Therefore, to obtain reliable results, you should also have a thorough knowledge of these additional test methods:

(a) Method 1—Sample and Velocity Traverses for Stationary Sources.

(b) Method 4—Determination of Moisture Content in Stack Gases.

(c) Method 7E—Determination of Nitrogen Oxides Emissions From Stationary Sources (Instrumental Analyzer Procedure).

All methods in this list appear in 40 CFR part 60, appendix A.

1.1 Analytes. *What does this method determine?*

Analyte	CAS No.	Sensitivity
CO	630–08–0	*See* discussion in section 1.3.

1.2 Applicability. *When is this method required?* Method 10 is required in specific New Source Performance Standards and State Implementation Plans and permits where measuring CO concentrations in stationary source emissions is required. Other regulations may also require its use.

1.3 Data Quality Objectives. Refer to section 1.3 of Method 7E.

2.0 Summary of Method

In this method, you continuously or intermittently sample the emission gas and convey the sample to a nondispersive infrared analyzer (NDIR) that measures the concentration of CO. You must adhere to the performance requirements of this method to validate your data.

3.0 Definitions

3.1 The Analyzer Calibration Error, Calibration Curve, Direct Calibration, System Calibration, Calibration Gas, Data Recorder, Gas Analyzer, Interference Check, Measurement System, Range, Response Time, Sampling System Bias, and Span are the same as in sections 3.0 of Method 7E.

4.0 Interferences

Any substance having a strong absorption of infrared energy will interfere to some extent. The following table gives examples. The table shows how the interference ratio can be higher when the measuring device has a low range (0–100 ppm). You can eliminate major interference problems by using silica gel and ascarite traps. If you use ascarite traps, correct the measured gas volume for the CO_2 removed in the trap. Instrument correction is also an acceptable means of compensating for interference.

Device range (ppm)	Interference ratio
1500–3000	3.5% H_20 per 7 ppm CO.
1500–3000	10% CO_2 per 10 ppm CO.
0–100	3.5% H_2O per 25 ppm CO.

Device range (ppm)	Interference ratio
0–100	10% CO_2 per 50 ppm CO.

5.0 Safety

Refer to section 5.0 of Method 7E.

6.0 Equipment and Supplies

Figures 10–1, 10–2, and 10–3 are schematic diagrams of acceptable continuous and integrated measurement systems and the analytical system. You must use a measurement system for CO that meets the following specifications for the essential components.

6.1 *What do I need for the measurement system?* Sample Probe, Particulalte Filter, Heated Sample Line, Sample Lines, Moisture Removal System, Sample Pump, Flow Control/Gas Manifold, Sample Gas Manifold, and Data Recorder. You must follow the noted specifications in section 6.1 of Method 7E.

6.2 CO Analyzer. An instrument that uses nondispersive infrared detection principal to continuously measure CO in the gas stream and meets the specifications in section 13.0. The dual-range analyzer provisions of section 6.1.8.1 of Method 7E apply.

7.0 Reagents and Standards

7.1 Calibration Gas. *What calibration gases do I need?* Refer to section 7.1 of Method 7E for the calibration gas requirements.

7.2 Interference Check. *What additional reagents do I need for the interference check?* Use the test gases listed in Table 7E–5 of Method 7E to conduct the interference check. Conduct the interference check by sequentially introducing the gases listed in Table 7E–5 (one at a time) both with and without CO into the calibrated analyzer and recording the apparent concentrations after waiting at least 3 times the analyzer response time. This is then repeated with a blend containing a known CO concentration greater than 80 percent of the analyzer's range and calculating the difference between the known value and the apparent concentration. For each potential interferent gas, identify the largest of the 2 absolute values as the potential interference. The interference for all potential interferent gases in the source category must be less than 2.5 percent of the range to be acceptable. Record the data on a form similar to Figure 7E–8.

8.0 Sample Collection, Preservation, Storage, and Transport

Emission Test Procedure

8.1 Sampling Site and Sampling Points. You must follow section 8.1 of Method 7E.

8.2 Measurement System Performance Tests. You must follow the Calibration Gas Verification, Measurement System Preparation, Analyzer Calibration Error Test, Initial Sampling System Bias Check, Measurement System Response Time, and Interference Check procedures in sections 8.2 and 8.3 of Method 7E.

8.3 Sample Collection. Follow section 8.1. Sample within 5 percent of the rate you used during the sampling system bias check.

8.4 Post-Run Sampling System Bias Check and Alternative Dynamic Spike Procedure. Follow sections 8.5 and 8.6 of Method 7E.

9.0 Quality Control

Follow quality control procedures in section 9.0 of Method 7E.

10.0 Calibration and Standardization

Follow the procedures for calibration and standardization in section 10.0 of Method 7E.

11.0 Analytical Procedures

Because sample collection and analysis are performed together (*see* section 8), additional discussion of the analytical procedure is not necessary.

12.0 Calculations and Data Analysis

You must follow the procedures for calculations and data analysis in section 12.0 of Method 7E, as applicable.

13.0 Method Performance

13.1 The Analytical Range, Sensitivity, System Response and Minimum Sampling Times, Analyzer Calibration Error, Sampling System Bias, Interference Test and Alternative Dynamic Spike Check specifications are the same as in section 13.0 of Method 7E.

14.0 Pollution Prevention [Reserved]

15.0 Waste Management [Reserved]

16.0 Alternative Procedures

16.1 Alternative Interference Check.

16.2 Dynamic Spiking Procedure, Manufacturer's Stability Test and Annual Primary Interference Recheck (as applicable). These procedures are the same as in section 16 of Method 7E.

17.0 References

1. ''EPA Traceability Protocol for Assay and Certification of Gaseous Calibration Standards'' September 1997 as amended, EPA–600/R–97/121.

18.0 Tables, Diagrams, Flowcharts, and Validation Data

TABLE 10–1.—FIELD DATA

Location:		Date:
Test:		Operator:
Clock Time	Rotameter Reading liters/min (cfm)	Comments

BILLING CODE 6560–50–P

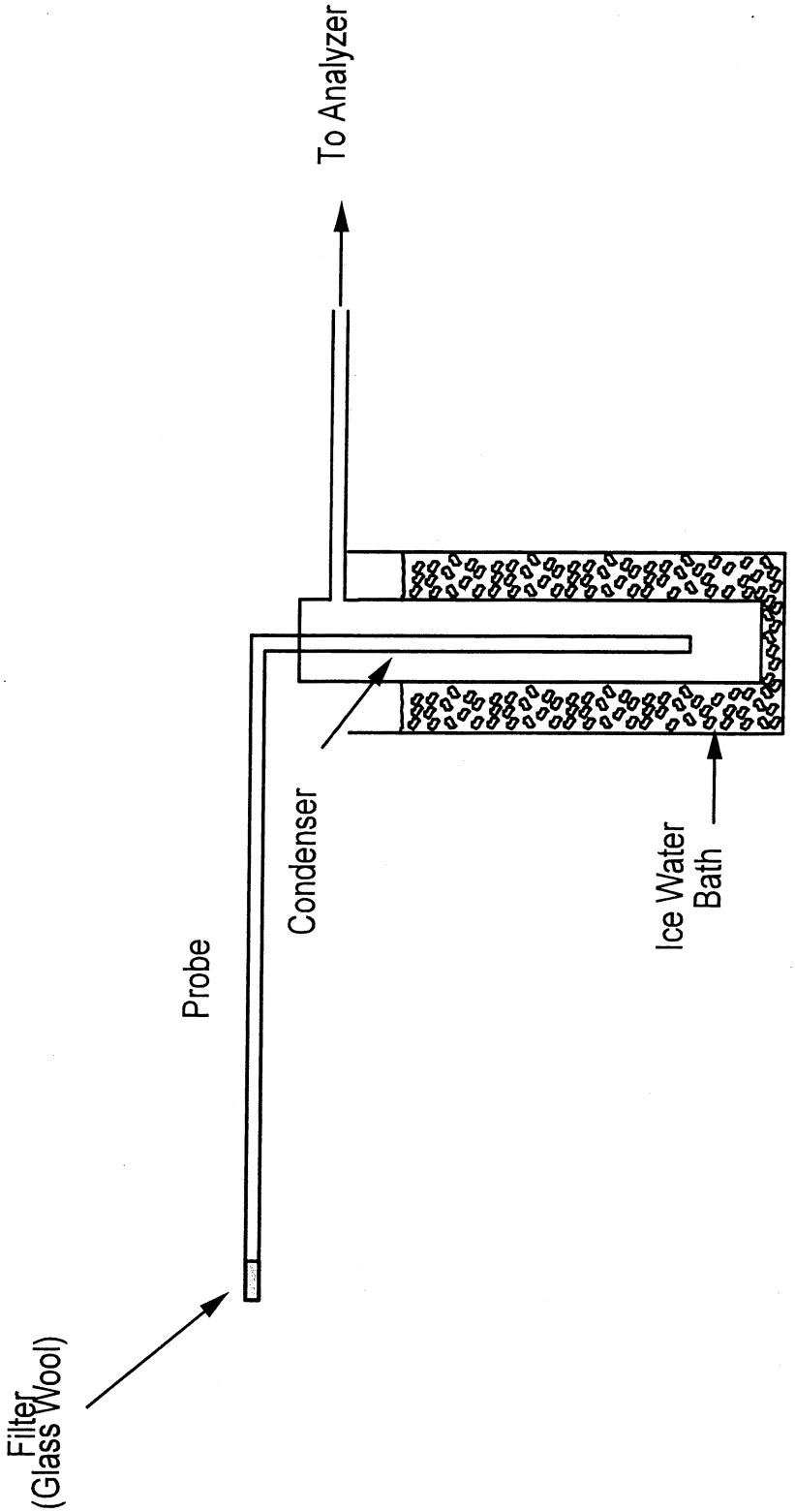

Figure 10-1. Continuous Sampling Train.

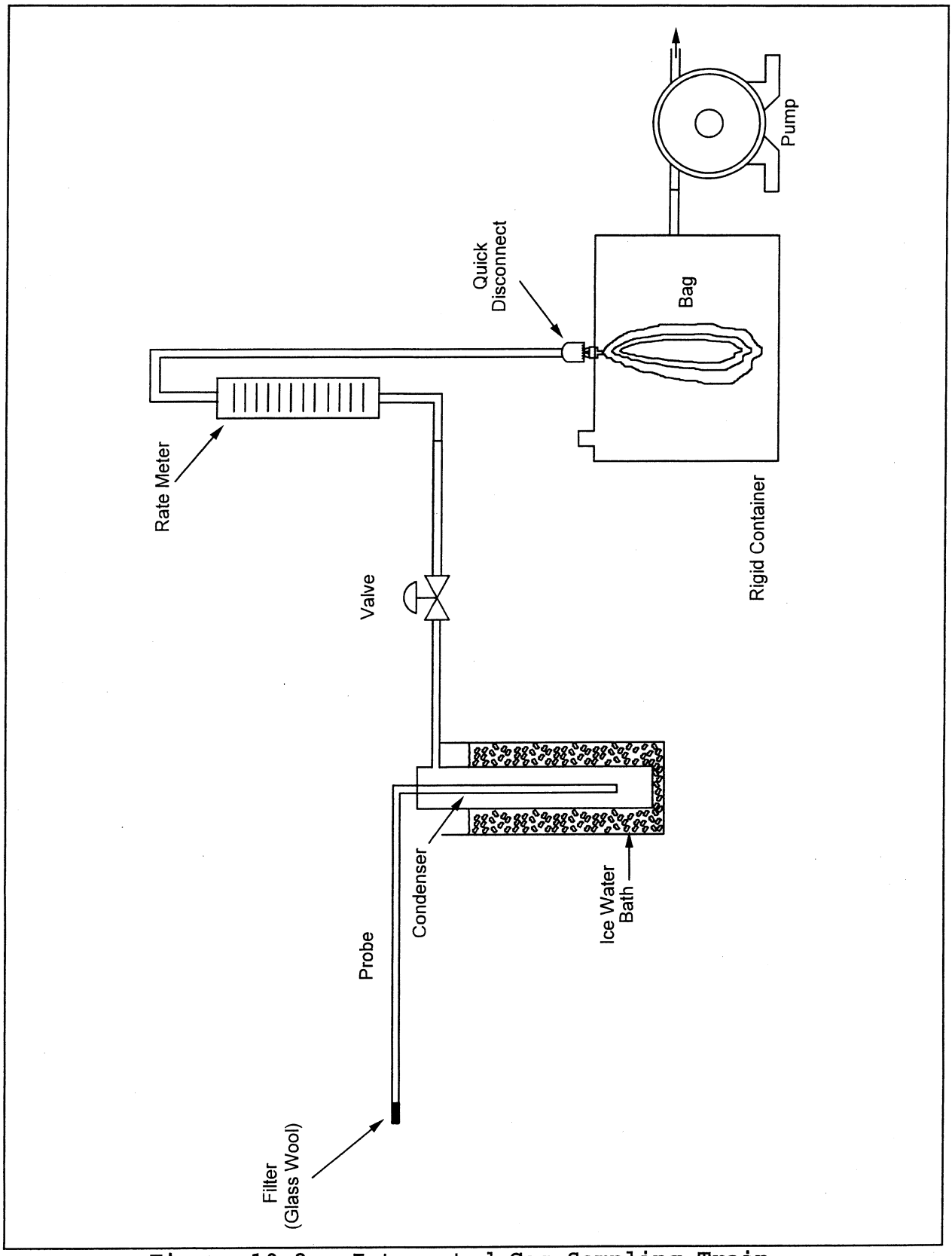

Figure 10-2. Integrated Gas Sampling Train.

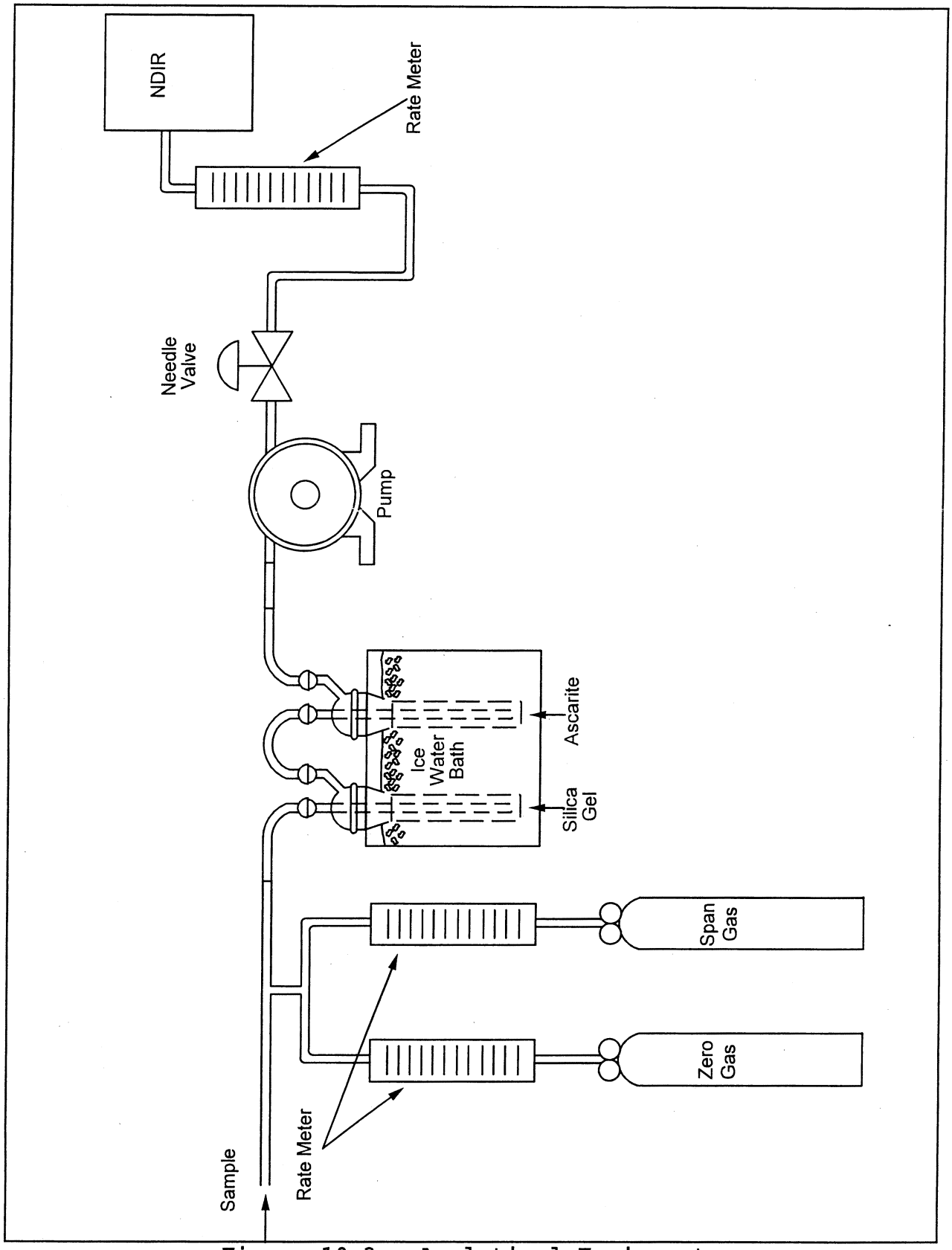

Figure 10-3. Analytical Equipment.

BILLING CODE 6560–50–C

* * * * *

Method 20—Determination of Nitrogen Oxides and Sulfur Dioxide Emissions From Stationary Gas Turbines

1.0 Scope and Application

What Is Method 20?

Method 20 contains the details you must follow when using an instrumental analyzer to determine concentrations of nitrogen oxides, oxygen, and sulfur dioxide in the emissions from stationary gas turbines. This method refers to other methods for specific instructions for equipment and performance requirements, supplies, sample collection and analysis, calculations, and data analysis. All methods that are referenced are in appendix A of 40 CFR part 60.

1.1 Analytes. *What does this method determine?*

Analyte	CAS No.	Sensitivity
Nitrogen oxides (NO_X) as nitrogen dioxide		*See* section 1.3 of Method 7E.
Nitric oxide (NO)	10102–43–9	
Nitrogen dioxide (NO_2)	10102–44–0	
Diluent oxygen (O_2) or carbon dioxide (CO_2)		*See* section 1.3 of Method 3A.
Sulfur dioxide (SO_2)	7446–09–5	*See* section 1.3 of Method 6C.

1.2 Applicability. *When is this method required?* Method 6C is required in specific New Source Performance Standards, Clean Air Marketing rules, and State Implementation Plans and permits where measuring SO_2 concentrations in stationary source emissions is required. Other regulations may also require its use.

1.3 Data Quality Objectives. Refer to section 1.3 of Method 7E.

2.0 Summary of Method

In this method, NO_X, O_2 (or CO_2), and SO_2 are measured using the following methods:

Method 1—Sample and Velocity Traverses for Stationary Sources.

(a) Method 7E—Determination of Nitrogen Oxides Emissions From Stationary Sources (Instrumental Analyzer Procedure).

(b) Method 3A—Determination of Oxygen and Carbon Dioxide Emissions From Stationary Sources (Instrumental Analyzer Procedure).

(c) Method 6C—Determination of Sulfur Dioxide Emissions From Stationary Sources (Instrumental Analyzer Procedure).

3.0 Definitions

Refer to section 3.0 of Method 7E.

4.0 Interferences [Reserved]

5.0 Safety

Refer to section 5.0 of Method 7E.

6.0 Equipment and Supplies

The measurement system design is shown in Figure 20–1. Refer to the appropriate methods listed in section 2.0 for equipment and supplies.

7.0 Reagents and Standards

Refer to the appropriate methods listed in section 2.0 for reagents and standards.

8.0 Sample Collection, Preservation, Storage, and Transport

Emission Test Procedure

8.1 Sampling Site and Sampling Points. You must follow section 8.1 of Method 7E.

8.2 Measurement System Performance Tests. You must follow the Calibration Gas Verification, Measurement System Preparation, Analyzer Calibration Error Test, NO_2 to NO Conversion Efficiency Test (as applicable), Initial Sampling System Bias Check, System Response Time.

8.3 Sample Collection. Follow section 8.4 of Method 7E.

8.4 Post-Run Sampling System Bias Check and Alternative Dynamic Spike Procedure. Follow sections 8.5 and 8.6 of Method 7E.

9.0 Quality Control

Follow quality control procedures in section 9.0 of Method 7E.

10.0 Calibration and Standardization

Follow the procedures for calibration and standardization in section 10.0 of Method 7E.

11.0 Analytical Procedures

Because sample collection and analysis are performed together (*see* section 8), additional discussion of the analytical procedure is not necessary.

12.0 Calculations and Data Analysis

You must follow the procedures for calculations and data analysis in section 12.0 of the appropriate method listed in section 2.0.

13.0 Method Performance

13.1 The Analytical Range, Sensitivity, System Response and Minimum Sampling Times, Analyzer Calibration Error, Sampling System Bias, NO_2 to NO Conversion Efficiency Test (as applicable), Interference Check, and Alternative Dynamic Spike Check specifications are the same as in section 13.0 of Method 7E.

14.0 Pollution Prevention [Reserved]

15.0 Waste Management [Reserved]

16.0 Alternative Procedures

Refer to section 16.0 of the appropriate method listed in section 2.0 for alternative procedures.

17.0 References

Refer to section 17.0 of the appropriate method listed in section 2.0 for references.

18.0 Tables, Diagrams, Flowcharts, and Validation Data

In addition to Figure 20–1, refer to section 18.0 of the appropriate method listed in section 2.0 for tables, diagrams, flowcharts, and validation data.

BILLING CODE 6560–50–P

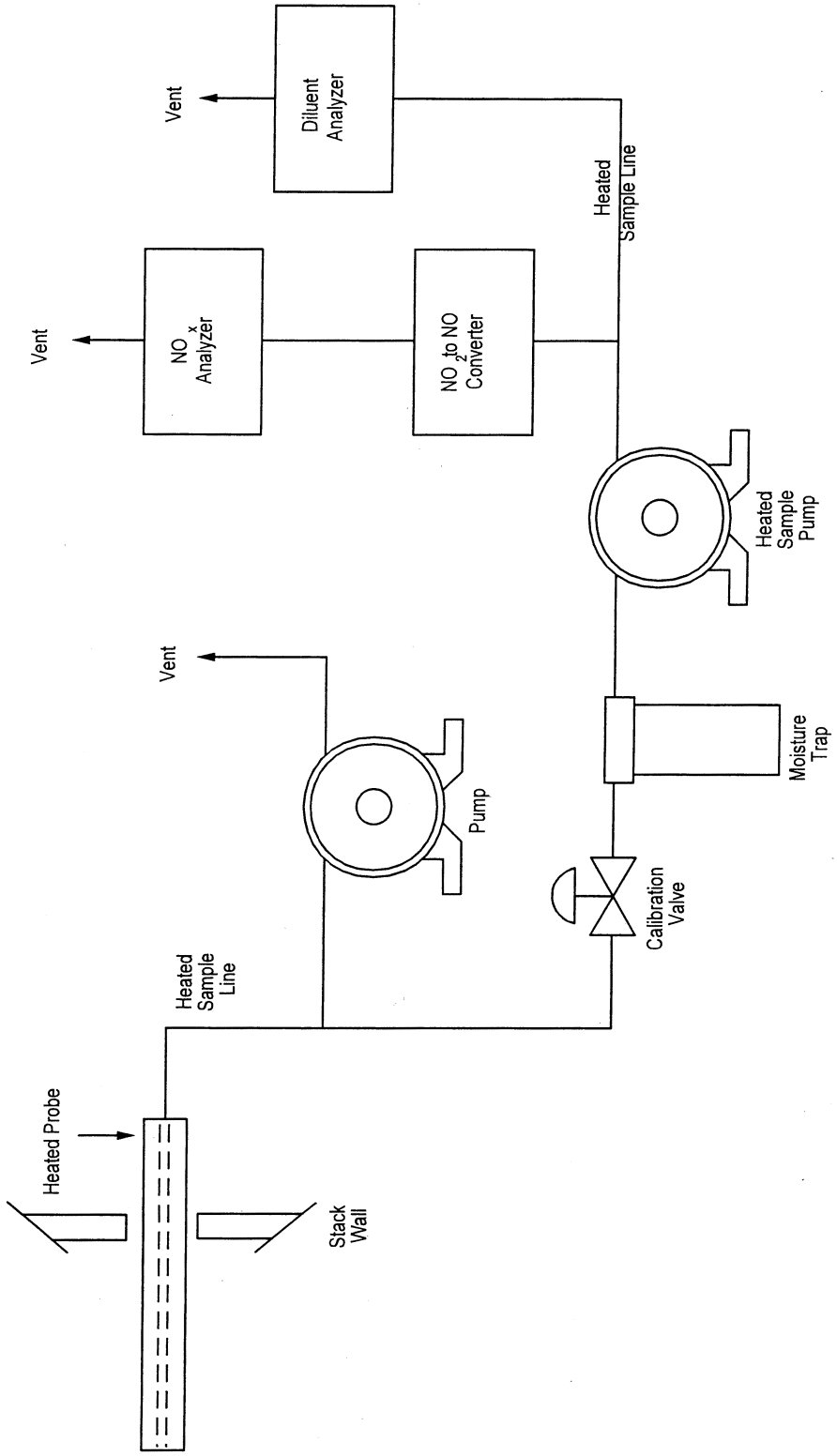

Figure 20-1. Measurement System Design.

* * * * *

[FR Doc. 03–24909 Filed 10–9–03; 8:45 am]
BILLING CODE 6560–50–C

Federal Register

Friday,
October 10, 2003

Part V

Department of Housing and Urban Development

Notice of Funding Availability (NOFA) for the HUD Urban Scholars Fellowship Program; Notice

DEPARTMENT OF HOUSING AND URBAN DEVELOPMENT

[Docket No. FR–4859–N–01]

Notice of Funding Availability (NOFA) for the HUD Urban Scholars Fellowship Program

AGENCY: Office of the Assistant Secretary for Policy Development and Research, HUD.

ACTION: Notice of Funding Availability (NOFA).

SUMMARY: *Purpose of the Program.* To provide encouragement to new scholars to undertake research now, and throughout their careers, on topics of interest to HUD.

Available Funds. Approximately $550,000 from the Fiscal Year (FY) 2003 Consolidated Appropriations Resolution, Division K, has been set aside to fund grants under this NOFA.

Eligible Applicants: Ph.D. recipients who have an academic appointment at an institution of higher education and have received their Ph.D. degrees no earlier than January 1, 1998.

Application Deadline. **December 17, 2003.**

Match. University support in terms of course load reductions, indirect costs waived, space, *etc.* is required.

Additional Information

I. Application Due Date

Your completed application must be received on or before December 17, 2003, based on the following submission requirements.

Address for Submitting Applications. Your completed application consists of an original signed application and one copy. Submit your completed application to the following address: The Fellowship Office/HUD GR 346A, National Research Council, 500 Fifth Street, NW., Washington, DC 20001–2736. Only one application per applicant will be accepted.

For Further Information and Technical Assistance. You may contact the National Research Council (NRC) by telephone: (202) 334–2872; fax: (202) 334–3419 (these are not toll-free numbers); or email: *infofell@nas.edu.*

II. Amount Allocated

Approximately $550,000 made available from the FY 2003 Consolidated Appropriations Resolution (Pub. L. 108–7; approved February 20, 2003), Division K, for the Research and Technology Program, Office of Policy Development and Research, has been set aside to fund grants under this program NOFA.

The maximum grant period is 15 months. The tenure will commence on the effective date of the grant agreement.

The maximum amount to be requested by and awarded to an applicant is $55,000. HUD reserves the right to make awards for less than the maximum amount or less than the amount requested in your application.

III. Program Description; Eligible Applicants; Eligible Activities

(A) *Program Description.* The purposes of the HUD Urban Scholars Program are to:

(1) Fund research relevant to HUD priorities and issues in the United States and its possessions;

(2) Provide encouragement to new scholars to undertake research now, and throughout their careers, on topics of interest to HUD; and

(3) Make an impact on the academic context in which these scholars work so that this kind of research becomes highly valued. The research priorities for the HUD Urban Scholars Program are designed to inform federal problem-solving and policy-making relating to HUD's Strategic Goals.

(B) *HUD's Strategic Goals.* HUD's Strategic Goals are to:

(1) Increase Homeownership Opportunities. This strategic goal seeks to increase homeownership opportunities, particularly for minorities; make the home buying process easier and less expensive; fight practices that permit predatory lending; help HUD-assisted renters become homeowners; and keep existing homeowners from losing their homes.

(2) Promote Decent Affordable Housing. This strategic goal seeks to expand access to decent affordable rental housing; improve the physical quality and management accountability of public and assisted housing; increase housing opportunities for the elderly and persons with disabilities; and help HUD-assisted renters achieve progress toward self-sufficiency.

(3) Strengthen Communities. This strategic goal seeks to improve economic conditions in distressed communities; make communities more livable; end chronic homelessness; and mitigate housing conditions that threaten health.

(4) Ensure Equal Opportunity in Housing. HUD's Equal Opportunity in Housing strategic goal seeks to resolve discrimination complaints on a timely basis; promote public awareness of Fair Housing Laws; and improve housing accessibility for persons with disabilities.

(5) Embrace High Standards of Ethics, Management, and Accountability. Through this strategic goal HUD is seeking to rebuild HUD's human capital and further diversify its workforce; improve HUD's management, internal controls and systems, and resolve audit issues; improve accountability, service delivery, and customer service of HUD and its partners; and ensure program compliance.

(6) Promote Participation of Grass-Roots Faith-Based and Other Community-Based Organizations. Through this strategic goal, HUD seeks to reduce regulatory barriers to participation by grass-roots faith-based and other community-based organizations; conduct outreach to inform potential partners of HUD opportunities; expand technical assistance resources deployed to grass-roots faith-based and other community-based organizations; and encourage partnerships between grass-roots faith-based and other community-based organizations and HUD's traditional grantees.

HUD, through its Secretarial Policy Priorities, also encourages applicants to undertake specific activities that will assist the Department in implementing its policy priorities and which will help the Department achieve its Strategic Goals for FY 2004, when the majority of funding recipients will be reporting programmatic results and achievements. Applicants who include research work that address these policy priorities will receive higher rating scores than applicants who do not address these policy priorities. HUD's Secretarial Policy Priorities are:

(1) Providing Increased Homeownership and Rental Opportunities for Low- and Moderate-Income Persons with Disabilities, the Elderly, Minorities, and Families with Limited English Proficiency. Too often these individuals are shut out of the housing market through no fault of their own. Many of these families are anxious to have a home of their own or better or more affordable rental housing, but are not aware of programs and assistance available.

(2) Improving Our Nation's Communities. HUD wants to improve the quality of life for those living in distressed communities by bringing capital to these areas to finance business investments to grow new businesses; maintain and expand existing businesses; create a pool of funds for new small or minority-owned businesses; improve the environmental health and safety of families living in public and privately owned housing; and make communities more livable by providing public and social services and

improving infrastructure and community facilities.

(3) Encouraging Accessible Design Features. These design features are intended to promote visitability and incorporate features of universal design in new construction and rehabilitation projects. For more information on visitability visit *http://www.concretechange.org.* For more information on universal design, visit the Center for Universal Design at *http://www.design.ncsu.edu:8120/cud/* or the Resource Center on Accessible Housing and Universal Design at *http://www.abledata.com/Site_2/accessib.htm.*

(4) Providing Full and Equal Access to Grass-Roots Faith-Based and Other Community-Based Organizations in HUD Program Implementation. HUD encourages non-profit organizations, including grass-roots faith-based and other community-based organizations, to participate in the vast array of programs HUD funds. HUD also encourages states and units of local government, universities and colleges, and other organizations to partner with grass-roots organizations *e.g.* civic organizations, faith-communities, and grass-roots faith-based and other community-based organizations that have not been effectively utilized. HUD considers an organization to be a grass-roots organization if the organization is headquartered in the local community to which it provides services and has a social services budget of $300,000 or less, or has six or fewer full-time equivalent employees. Local affiliates of national organizations are not considered grass-roots. National organizations are encouraged to partner with grass-roots organizations.

(5) Colonias. HUD is seeking to improve housing conditions for families living in Colonias. Colonias means any identifiable, rural community that: is located within 150 miles of the border between the United States and Mexico; is determined to be a Colonia on the basis of objective need criteria including lack of potable water supply, lack of adequate sewerage systems, and lack of decent, safe, sanitary, and accessible housing.

(6) Participation of Minority-Serving Institutions in HUD Programs. Pursuant to Executive Orders 13256 President's Board of Advisors on Historically Black Colleges and Universities, 13230 President's Advisory Commission on Educational Excellence for Hispanic Americans, 13216 Increasing Participation of Asian Americans and Pacific Islanders in Federal Programs, and 13270 Tribal Colleges and Universities, HUD is strongly committed to broadening the participation of Minority-Serving Institutions (MSI) in its programs to advance the development of human potential, strengthen the nation's capacity to provide high-quality education, and increase opportunities for MSI to participate and benefit from federal financial assistance programs. A listing of MSI can be found on the Department of Education website at *http://www.ed.gov/offices/OCR/minorityinst.html.*

(7) Participation in Energy Star. HUD has adopted a wide-ranging energy action plan for improving energy efficiency in all programs. The purpose of HUD's Energy Star Partnership with Environmental Protection Agency (EPA) and the Department of Energy (DoE) is to promote energy efficiency of the affordable housing stock and to help protect the environment. HUD also urges the purchase and use of Energy Star products and providing Energy Star promotional materials. For more information about Energy Star visit *http://www.energystar.gov.*

(8) Ending Chronic Homelessness Within Ten Years. President Bush has set a national goal to end chronic homelessness within ten years, and this has been embraced by Secretary Martinez. A person experiencing chronic homelessness is defined as an individual with a disabling condition who has been continuously homeless for a year or more or has experienced four or more episodes of homelessness over the last three years.

(C) *Research Topics.* Examples of research topics that will further HUD's Strategic Goals and Policy Priorities related to these goals are:

(1) Increasing Homeownership.

(a) Increasing minority homeownership.

(b) Simplifying the home buying process (RESPA reform) and reducing settlement costs.

(c) Setting appropriate housing goals for the Government Sponsored Enterprises (GSE).

(d) Countering Predatory Lending.

(e) Helping low-income homeowners avoid default and foreclosure.

(f) Evaluating housing counseling.

(2) Improving Our Nation's Communities.

(a) Strengthening the economic viability of communities.

(b) Improving the environmental health and safety of families living in public and privately owned housing.

(c) Making communities more livable.

(d) Providing increased public and social services.

(e) Improving infrastructure and community facilities.

(3) Encouraging Accessible Design Features and Promoting Decent Affordable Housing.

(a) Reducing regulatory barriers to the development of affordable housing, as well as all forms of multifamily housing.

(b) Meeting the housing-related needs of the elderly.

(c) Meeting the housing-related needs of persons with disabilities.

(d) Meeting the housing-related needs of families with limited English proficiency.

(e) Improving housing quality and affordability through technology and design.

(f) Ensuring visitability in new construction and substantial rehabilitation.

(g) Increasing use of universal design in construction and rehabilitation projects.

(4) Providing full and equal access and participation to Grass-Roots Faith-Based and other Community-Based Organizations and Strengthening the Capacity of Grass-Roots Faith-Based and Other Community-Based Organizations to conduct community, housing, and economic development programs.

(5) Meeting and Improving the Housing and Community and Economic Development Needs of Residents of High-Needs areas such as Colonias, Appalachia, the Mississippi Delta, and Tribal Areas.

(6) Increasing Participation of Minority-Serving Institutions in HUD Programs.

(7) Increasing Participation in Energy Star.

(8) Ending Chronic Homelessness in Less than Ten Years.

(a) Preventing homelessness.

(b) Developing creative strategies for expanding the availability of affordable housing.

(c) Strengthening the delivery of HUD-funded rental assistance and assistance provided through the low-income housing tax credit

(d) Promoting Self-Sufficiency among residents of public and assisted housing.

(9) Ensuring Equal Opportunity in Housing.

(a) Reducing housing discrimination.

(b) Improving housing accessibility for persons with disabilities.

(10) Embracing High Standards of Ethics, Management, and Accountability.

(a) Reducing fraud, waste, and abuse in HUD-funded programs.

(b) Improving the effectiveness of HUD programs through program evaluations.

(D) *Eligible Applicants.* You must meet the following conditions:

(1) Have an academic appointment at an institution of higher education and

be on a tenure track or term (teaching or research) appointment that will extend beyond the 15-month duration of this fellowship;

(2) Have been awarded a Ph.D. received no earlier than January 1, 1998;

(3) Proposed a research project that can be completed within the 15-month fellowship period;

(4) Received support from your institution as attested to in the letter described below in Section V(C)(2)(c); and

(5) Be a U.S. citizen or legally admitted permanent resident (green card recipient).

(E) *Eligible Activities.* Your grant must support costs related to completion of your research project. Eligible costs include, but are not limited to, your salary for two summers; graduate assistants to work on the project; up to $2,500 per course for the purchasing of your release time from teaching; computer software; survey development and administration; the purchase of data; travel expenses to collect data or to make presentations at meetings on your findings; transcription services; compensation for interviews; and no more than eight percent of the university's indirect costs.

IV. Application Selection Process

The National Research Council (NRC) will administer the competition and selection process for this program on HUD's behalf. The NRC will conduct two types of reviews: A threshold review to determine your eligibility to apply; and a technical review to rate your application based on the rating factors in this section.

(A) *Threshold Factors for Funding Consideration.* Under the threshold review, your application can only be rated if the following standards are met:

(1) You are eligible to apply for this program, as defined in Section III (D) above, and have provided a letter from your department chair confirming your eligibility;

(2) You have obtained a mentor and have included a letter from this person confirming this fact and describing his or her role in your research; and

(3) Your institution has agreed to provide some support to you, beyond that provided by this funding, as part of this grant and has provided a letter outlining that support.

(B) *Ineligible Activities.* Your grant may not be used to pay for tuition, computer hardware, meals and relocation costs, or other costs not directly related to your research project. Fellowship funding cannot be used to substitute for university funding. HUD must approve receipt of additional external grant awards and will do so on a case-by-case basis.

(C) *Other Requirements.*

(1) *Support from your university.* Support from your university is required. Institutions will be required at a minimum, to:

(a) Designate a faculty adviser to monitor your progress on your research project;

(b) Provide office space, computer usage, etc.; and

(c) Waive indirect costs above the eight percent allowed to be covered by this fellowship.

In addition, your application will be viewed more favorably if your institution agrees to reduce your course load by at least one course per term or semester, but continues to pay your full salary.

(2) *Progress reporting.* Award recipients must submit two copies of a progress report halfway through the fellowship tenure that details the progress made to date toward completion of the research project. At the completion of the research project, applicants must furnish three copies of a final paper documenting the research findings, as well as three copies of any publication or presentation based on the research.

(3) *Mentors.* You will be required to work with a mentor on your research project. The mentor can be someone in your institution or elsewhere and should be a well-respected scholar in the area of your research topic. The mentor will be expected to provide you with advice and direction on substantive research issues. The mentor and the faculty monitor described above can be, but do not have to be, the same person.

(4) *Compliance with Fair Housing and Civil Rights Laws.* All applicants and their subrecipients must comply with all Fair Housing and civil rights laws, statutes, regulations, and executive orders as enumerated in 24 CFR 5.105(a). In addition, the applicant and any subrecipients must comply with Title IX of the Education Amendments Act of 1972 (20 U.S.C. 1681 *et seq.*).

NRC will not rate and rank your application under this NOFA if the charge, lawsuit or letter of findings has not been resolved to the satisfaction of the Department before the application deadline. if you, the applicant,

(a) Have been charged with a systemic violation of the Fair Housing Act by the Secretary alleging ongoing discrimination;

(b) Are a defendant in a Fair Housing Act lawsuit filed by the Department of Justice alleging an ongoing pattern or practice of discrimination; or

(c) Have received a letter of noncompliance findings under Title VI, Section 504 or Section 109.

HUD's decision whether a charge, lawsuit, or a letter of findings has been satisfactorily resolved will be based upon whether appropriate actions have been taken to address allegations of ongoing discrimination in the policies or practices involved in the charge, lawsuit, or letter of findings.

(5) *Delinquent Federal Debts.* Consistent with the purpose and intent of 31 U.S.C. 3720B and 28 U.S.C. 3201(e), no award of federal funds shall be made to an applicant who has an outstanding delinquent federal debt until: (a) The delinquent account is paid in full; (b) a negotiated repayment schedule is established and at least one payment is received; or (c) other arrangements satisfactory to the Department of Housing and Urban Development are made prior to the deadline submission date.

(D) *Conflicts of Interest.* All individuals involved in rating and ranking this NOFA, including experts and consultants, must avoid conflicts of interest or the appearance of conflicts. Individuals involved in the rating and ranking of applications must disclose to HUD's General Counsel or HUD's Ethics Law Division the following information, if applicable: (a) How the selection or non-selection of any applicant under this NOFA will affect the individual's financial interests, as provided in 18 U.S.C. 208; or, (b) how the application process involves a party with whom the individual has a covered relationship under 5 CFR 2635.502. The individual must disclose this information prior to participating in any matter regarding this NOFA. If you have questions regarding these provisions, or if you have questions concerning a conflict of interest, you may call the Office of General Counsel, Ethics Law Division, at 202–708–3815.

(E) *Factors for Award Used to Evaluate and Rate Applications.* The factors for rating and ranking applicants and maximum points for each factor are provided below. The maximum number of points for this program is 100.

Rating Factor 1: Capacity to do the Research (15 points). In reviewing this factor, NRC will determine the extent to which your training, past employment, and past written work, such as your dissertation, teaching, coursework, and previously completed research papers that were accepted for presentation or publication, lay a foundation for this proposed work.

Rating Factor 2: Need for the Research (20 points). In reviewing this factor, NRC will determine the extent to which

your proposed project undertakes research in an area not covered by previous research or proposes to look at a previously studied research topic in a new and different way. Reviewers will look at the clarity and compelling nature of the case you make for this project in the context of the existing literature and knowledge base for that topic.

Rating Factor 3: Approach (40 total points). (a) *Appropriateness of your Methodology and Approach to the Research Topic (25 points).* In reviewing this factor, NRC will determine the extent to which your research design and methodology are likely to produce data and information that will successfully answer your research hypothesis. NRC will also evaluate the extent to which the methodology you propose to use is sound and generally accepted by the relevant research community. Reviewers will be looking at the extent to which you use standard methodological practices in line with research already completed or existing publications in the field related to your research questions. Applicants that focus on one of the HUD policy priorities listed above for this year will receive higher points.

(b) *Plan for Timely Completion of Your Research Project (10 points).* In reviewing this factor, NRC will determine the extent to which your research design and methodology and plan for completion of your research project can feasibly be completed within the 15-month fellowship period. Applications that propose extremely complex and time-consuming data collection efforts (*e.g.*, major longitudinal studies or a very large number of site visits within the grant period) will be determined to be less feasible for completion within the allowed time frame. For example, if you propose a methodology based on information that may not be publicly available until after the end of the grant period (*e.g.*, census information), or a data collection plan that will take longer than the time you have allowed for it, you will get a lower score than if you have presented a time line and methodology that show evidence that the research project can be completed within the grant period.

(c) *Quality of the Mentoring Plan (5 points).* In reviewing this factor, NRC will determine the appropriateness of the person chosen to be your mentor in terms of his/her previous work, (*e.g.*, research, publications, presentations, standing in the research community, and availability) and the role the mentor has agreed to play in your project. The more time the mentor commits to you, the greater the number of points you will receive.

Rating Factor 4: Leveraging/ Commitment of the University (10 points). In reviewing this factor, NRC will determine the extent of the commitment of your university, beyond that required in Section IV (C)(1). The quality of your institution's commitment, in terms of its furthering your research project, will also be evaluated under this factor. For example, your university could propose to cover the cost of a graduate assistant to work on your research project in order to demonstrate its commitment beyond what is minimally required. The larger the commitment, translated into dollar terms, the higher the points. Full points may only be received if your institution designates a faculty adviser and agrees to reduce your course load by one course per semester or term while it continues paying your full salary.

Rating Factor 5: Relevance of Your Research to HUD's Strategic Goals (15 points). In reviewing this factor, NRC will determine the extent to which your proposed research project will produce policy-relevant information that is directly related to one or more of the strategic goals listed above (*i.e.*, the research could improve the effectiveness of HUD's programs and policies and the ability to achieve the stated goals). The less directly related to one of these goals your research project is, the fewer points you will receive. For example, a study of minorities' housing choice decisions would have high relevance to HUD's strategic goals; a study of transportation inequities would have medium relevance; and a study of the effects of global warming on urban development would have low relevance. In addition, this factor reflects HUD's goal to embrace high standards of ethics, management, and accountability and measures your commitment to assess your performance to achieve your proposed research agenda's outcome and/or objective. NRC will evaluate the extent to which you identify activities, outcomes, benchmarks, and performance indicators that will describe how performance will be measured. This information should be provided in a Logic Model format. This form number can be found under the ''Additional Required Assurance and Certification'' section of this NOFA.

(F) *Selections.* HUD will fund applications in rank order, until it has awarded all available funds. However, as noted in Section II, HUD reserves the right to make awards for less than the amount requested in your application. After all application selections have been made, HUD may require that you participate in negotiations to determine the specific terms of the fellowship and the grant budget. In cases where HUD cannot successfully complete negotiations, or you fail to provide HUD with requested information, an award will not be made. In such instances, HUD may elect to offer an award to the next highest-ranking applicant, and proceed with negotiations with that applicant.

V. Application Submission Requirements

Your application should include an original and one copy of the items in the order listed below. All pages should be numbered. All applications must be submitted on 8½ by 11-inch paper, double-spaced on one side of the paper, and printed in a standard 12-point font. Please do not exceed the page limits described below. Submitting pages in excess of the page limit will not disqualify your application but the information will not be considered, which may result in a lower score.

(A) *Evidence of your eligibility.* A letter must be submitted from your faculty chairperson containing the following: (1) Confirmation that you received a doctoral degree no earlier than January 1998; (2) verification of your appointment to a tenure-track or teaching or research position extending beyond the 15-month duration of this fellowship; (3) verification of your U.S. citizenship or evidence of your resident alien status; and (4) the university's name, department, mailing address, telephone, facsimile number, and e-mail address.

(B) *Abstract* (one page). You must include a summary that describes your proposed research project.

(C) *Response to Rating Factors.*

(*1*) *Rating Factor 1—Capacity to do the Research*

(a) A curriculum vita that contains the following:

(*1*) Your graduate and post-graduate educational background.

(*2*) A list of your publications: books, refereed journal articles, chapters contributed to books, articles in published proceedings, and any other articles.

(*3*) A list of text and poster presentations made during the last five years.

(*4*) Grants and awards received during the last five years.

(*5*) Teaching load during the last five years.

(b) A one-page abstract of your dissertation.

(c) Two letters of reference.

(*2*) Narrative Statement (addresses Factors 2 through 5 listed below): The application narrative must not exceed 15 pages in length (excluding letters, forms, and assurances) double spaced, on one side of the paper, and printed in a standard 12-point front.

(a) *Rating Factor 2—Need for the Research*

A succinct description of your proposed research and how your proposal is non-duplicative of previously published research.

(b) *Rating Factor 3—Approach*

Identify your proposed research, methodologies, and the extent to which it will produce data and information to successfully answer your research hypotheses. Include a letter from your mentor that contains his/her address, telephone and facsimile number and email address, states his/her qualifications and availability to be your mentor, and describes his/her proposed role in your research project (excluded from narrative page limit).

(c) *Rating Factor 4—Leveraging/Commitment of the University*

Provide evidence of your university's support and commitment to you furthering your research and a description of the type of support the institution will provide. Include a firm letter of commitment that outlines the University's total proposed level of support.

(d) *Response to Rating Factor 5—Relevance of Research*

Address the extent to which your proposed research will further and support HUD's research agenda and reflects HUD's goal to embrace high standards of ethics, management, and accountability and measures your commitment to assess your performance to achieve your proposed research outcome and/or objective. This information should be provided in a Logic Model format. Additional required Assurances and Certifications:

1. Application for Federal Assistance (HUD–424)
2. Application Assurances and Certifications (HUD–424–B)
3. Sample Budget (See Appendix A)
4. Disclosure of Lobbying Activities, (SF Form LLL)
5. Race and Ethnic Data Reporting Form (HUD–27061) (if applicable)
6. Applicant/Recipient Disclosure/Update Report (HUD–2880)
7. Logic Model (HUD–96010)

All forms must be signed by the applicant and can be downloaded from the HUD website at *www.hud.gov.*

VI. Corrections to Deficient Applications

After the application due date, NRC may not, consistent with HUD regulations in 24 CFR part 4, subpart B, consider any unsolicited information the applicant may want to provide. NRC may contact you to clarify an item in your application or to correct technical deficiencies. NRC may not seek clarification of items or responses that improve the substantive quality of your response to any rating factors. In order not to unreasonably exclude applications from being rated and ranked, NRC may contact applicants to ensure proper completion of the application and will do so on a uniform basis for all applicants. Examples of curable (correctable) technical deficiencies include failure to submit the proper certifications or failure to submit an application that contains an original signature by an authorized official. In each case, NRC will notify you in writing by describing the clarification or technical deficiency.

VII. Environmental Requirements

This NOFA does not direct, provide for assistance or loan and mortgage insurance for, or otherwise govern or regulate, real property acquisition, disposition, leasing, rehabilitation, alteration, demolition, or new construction, or establish, revise or provide for standards for construction or construction materials, manufactured housing, or occupancy. Accordingly, under 24 CFR 50.19(c)(1), this NOFA is categorically excluded from environmental review under the National Environmental Policy Act of 1969 (42 U.S.C. 4321).

VIII. Other Matters

(A) Federalism, Executive Order 13132

This notice does not have federalism implication and does not impose substantial direct compliance costs on state and local governments or preempt state law within the meaning of Executive Order 13132 (entitled ''Federalism'').

(B) Intergovernmental Review of Federal Program, Executive Order 12372

This notice is excluded from the intergovernmental review process and therefore should be sent directly to NRC.

(C) Conducting Business in Accordance With Core Values and Ethical Standards

Entities subject to 24 CFR parts 84 and 85 (most non-profit organizations and state, local, and tribal governments or government agencies or instrumentalities who receive federal awards of financial assistance) are required to develop and maintain a written code of conduct (see §§ 84.42 and 85.36(b)(3)). Consistent with regulations governing specific programs, your university's code of conduct must: prohibit real and apparent conflicts of interest that may arise among officers, employees, or agents; prohibit the solicitation and acceptance of gifts or gratuities by your officers, employees, and agents for their personal benefit in excess of minimal value; and outline administrative and disciplinary actions available to remedy violations of such standards. If awarded assistance under this NOFA, you will be required, prior to entering into a grant agreement with HUD, to submit a copy of your university's code of conduct and describe the methods you will use to ensure that all officers, employees, and agents of your organization are aware of your code of conduct. Failure to meet the requirement for a code of conduct will prohibit you from receiving an award document.

(D) Prohibition Against Lobbying Activities

You, the applicant, are subject to the provisions of Section 319 of the Department of Interior and Related Agencies Appropriation Act for Fiscal Year 1991(31 U.S.C. 1352) (the Byrd Amendment), which prohibits recipients of federal contracts, grants, or loans from using appropriated funds for lobbying the executive or legislative branches of the federal government in connection with a specific contract, grant, or loan. You are required to certify, using the certification found at Appendix A to 24 CFR part 87, that you will not and have not used appropriated funds for any prohibited lobbying activities. In addition, you must disclose, using Standard Form LLL ''Disclosure of Lobbying Activities,'' any funds, other than federally appropriated funds, that will be or have been used to influence federal employees, members of Congress, and congressional staff regarding specific grants or contracts. Federally recognized Indian tribes and tribally designated housing entities (TDHEs) established by federally recognized Indian tribes as a result of the exercise of the tribe's sovereign power are excluded from coverage of the Byrd Amendment, but state-recognized Indian tribes and TDHEs established under state law must comply with this requirement.

(E) Section 102 of the HUD Reform Act, Documentation and Public Access Requirements

Section 102 of the Department of Housing and Urban Development Reform Act of 1989 (42 U.S.C. 3545) (HUD Reform Act) and the regulations codified in 24 CFR part 4, subpart A, contain a number of provisions that are designed to ensure greater accountability and integrity in the provision of certain types of assistance administered by HUD. On January 14, 1992, HUD published a notice that also provides information on the implementation of Section 102 (57 FR 1942). The documentation, public access, and disclosure requirements of Section 102 apply to assistance awarded under this NOFA as follows:

(1) *Documentation and public access requirements.* HUD will ensure that documentation and other information regarding each application submitted pursuant to this NOFA are sufficient to indicate the basis upon which assistance was provided or denied. This material, including any letters of support, will be made available for public inspection for a five-year period beginning not less than 30 days after the award of the assistance. Material will be made available in accordance with the Freedom of Information Act (5 U.S.C. 552) and HUD's implementing regulations (24 CFR part 15).

(2) *Debriefing.* Beginning 30 days after the awards for assistance are publicly announced and for at least 120 days after awards for assistance are announced, HUD will provide a debriefing to any applicant requesting one on his or her application. All debriefing requests must be made in writing or by email by the authorized official whose signature appears on the HUD–424 or his or her successor in office, and submitted to the person or organization identified as the Contact under the section entitled ''For Further Information and Technical Assistance.'' Information provided during a debriefing will include, at a minimum, the final score you received for each rating factor, final evaluator comments for each rating factor, and the final assessment indicating the basis upon which assistance was provided or denied.

(3) *Disclosures.* HUD will make available to the public for five years all applicant disclosure reports (HUD Form 2880) submitted in connection with this NOFA. Update reports (also reported on HUD Form 2880) will be made available along with the applicant disclosure reports, but in no case for a period of less than three years. All reports, both applicant disclosures and updates, will be made available in accordance with the Freedom of Information Act (5 U.S.C. 552) and HUD's implementing regulations (24 CFR part 5).

(4) *Publication of Recipients of HUD Funding.* HUD's regulations at 24 CFR part 4 provide that HUD will publish a notice in the **Federal Register** to notify the public of all decisions made by the Department to provide:

(i) Assistance subject to Section 102(a) of the HUD Reform Act; and/or

(ii) Assistance provided through grants or cooperative agreements on a discretionary (non-formula, non-demand) basis, but that is not provided on the basis of a competition.

(F) *Section 103 of the HUD Reform Act.* HUD's regulations implementing Section 103 of the Department of Housing and Urban Development Reform Act of 1989 (42 U.S.C. 3537a), codified in 24 CFR part 4, subpart B, 4.26(2)(c) *et seq.* and 4.28 apply to this funding competition. The regulations continue to apply until the announcement of the selection of successful applicants. HUD employees involved in the review of applications and in the making of funding decisions are limited by the regulations from providing advance information to any person (other than an authorized employee of HUD) concerning funding decisions or from otherwise giving any applicant an unfair competitive advantage. Persons who apply for assistance in this competition should confine their inquiries to the subject areas permitted under 24 CFR part 4.

Applicants or employees who have ethics related questions should contact the HUD Ethics Law Division at 202–708–3815. (This is not a toll-free number.) HUD employees who have specific program questions should contact the appropriate field office counsel or Headquarters counsel for the program to which the question pertains.

(G) *Accessible Technology.* The Rehabilitation Act Amendments of 1998 (the Act) apply to all electronic information technology (EIT) used by a recipient for transmitting, receiving, using, or storing information to carry out the responsibilities of any federal funds awarded. The Act's coverage includes, but is not limited to, computers (hardware, software, word-processing, email, and web pages), facsimile machines, copiers, and telephones. When developing, procuring, maintaining, or using EIT, funding recipients must ensure that the EIT allows employees with disabilities and members of the public with disabilities to have access to and use of information and data that is comparable to the access and use of information and data by employees and members of the public who do not have disabilities. If these standards impose a hardship on a funding recipient, a recipient may provide an alternative means to allow the individual to use the information and data. However, no recipient will be required to provide information services to a person with disabilities at any location other than the location at which the information services is generally provided.

(H) *Name Check Review.* Applicants are subject to a name check review process. Name checks are intended to reveal matters that significantly reflect on the applicant's management and financial integrity, or if any key individuals have been convicted or are presently facing criminal charges. If the name check reveals significant adverse findings that reflect on the business integrity or responsibility of the recipient and/or key individual, HUD reserves the right to: (a) Deny funding or consider suspension/termination of an award immediately for cause; (b) require removal of any key individual from association with management of and/or implementation of the award; and (c) make appropriate provisions or revisions with respect to the method of payment and/or financial reporting requirements.

(I) *False Statements.* A false statement in an application is grounds for denial or termination of an award and grounds for possible punishment as provided in 18 U.S.C. 1001.

(J) *Catalog of Federal Domestic Assistance.* The Catalog of Federal Domestic Assistance number is: 14.518.

(K) *Paperwork Reduction Act Statement.* The information collection requirements contained in this NOFA have been approved by the Office of Management and Budget (OMB), under the Paperwork Reduction Act of 1995 (44 U.S.C. 3501–3520) and assigned OMB Control Number 2528–0175. An agency may not conduct or sponsor, and a person is not required to respond to, a collection of information unless the collection displays a valid control number.

IX. Authority

The authority for this program is found in Title V of the Housing and Urban Development Act of 1970 (Public Law 91–609).

Dated: August 11, 2003.

Darlene L. Williams,

General Deputy Assistant Secretary for Policy Development and Research.

BILLING CODE 4210–62–P

Application for Federal Assistance

U.S. Department of Housing and Urban Development

OMB Approval No.2501-0017 (exp. 03/31/2005)

1. Type of Submission
☐ Application ☐ Preapplication

2. Date Submitted	4. HUD Application Number
3. Date and Time Received by HUD	5. Existing Grant Number
	6. Applicant Identification Number

7. Applicant's Legal Name	8. Organizational Unit
9. Address (give city, county, State, and zip code) A. Address: B. City: C. County: D. State: E. Zip Code:	10. Name,title,telephone number,fax number, and e-mail of the person to be contacted on matters involving this application (including area codes) A. Name: B. Title: C. Phone: D. Fax: E. E-mail:
11. Employer Identification Number (EIN) or SSN	12. Type of Applicant (enter appropriate letter in box) A. State — I. University or College B. County — J. Indian Tribe C. Municipal — K. Tribally Designated Housing Entity (TDHE) D. Township — L. Individual E. Interstate — M. Profit Organization F. Intermunicipal — N. Non-profit G. Special District — O. Public Housing Authority H. Independent School District — P. Other (Specify)
13. Type of Application ☐ New ☐ Continuation ☐ Renewal ☐ Revision If Revision, enter appropriate letters in box(es) ☐ ☐ A. Increase Amount B. Decrease Amount C. Increase Duration D. Decrease Duration E. Other (Specify)	14. Name of Federal Agency **U.S. Department of Housing and Urban Development**
15. Catalog of Federal Domestic Assistance (CFDA) Number **1 4 ---** Title: Component Title:	16. Descriptive Title of Applicant's Program
17. Areas affected by Program (boroughs, cities, counties, States, Indian Reservation, etc.)	
18a. Proposed Program start date / 18b. Proposed Program end date	19a. Congressional Districts of Applicant / 19b. Congressional Districts of Program

20. Estimated Funding: **Applicant must complete the Funding Matrix on Page 2.**

21. Is Application subject to review by State Executive Order 12372 Process?
A. Yes ☐ This preapplication/application was made available to the State Executive Order 12372 Process for review on: Date_____
B. No ☐ Program is not covered by E.O. 12372
☐ Program has not been selected by State for review.

22. Is the Applicant delinquent on any Federal debt? ☐ No
☐ Yes If "Yes," explain below or attach an explanation.

Previous versions of HUD-424 and 424-M are obsolete

form **HUD-424** (01/2003)
ref. OMB Circular A-102

Funding Matrix

The applicant must provide the funding matrix shown below, listing each program for which HUD funding is being requested, and complete the certifications.

Grant Program*	HUD Share	Applicant Match	Other HUD Funds	Other Federal Share	State Share	Local/Tribal Share	Other	Program Income	Total
									0.00
									0.00
									0.00
									0.00
									0.00
Grand Totals	0.00	0.00	0.00	0.00	0.00	0.00	0.00	0.00	0.00

* For FHIPs, show both initiative and component

Certifications

I certify, to the best of my knowledge and belief, that no Federal appropriated funds have been paid, or will be paid, by or on behalf of the applicant, to any person for influencing or attempting to influence an officer or employee of an agency, a Member of Congress, an officer or employee of Congress, or an employee of a Member of Congress, in connection with the awarding of this Federal grant or its extension, renewal, amendment or modification. If funds other than Federal appropriated funds have or will be paid for influencing or attempting to influence the persons listed above, I shall complete and submit Standard Form-LLL, Disclosure Form to Report Lobbying. I certify that I shall require all sub awards at all tiers (including sub-grants and contracts) to similarly certify and disclose accordingly.

Federally recognized Indian Tribes and tribally designated housing entities (TDHEs) established by Federally-recognized Indian tribes as a result of the exercise of the tribe's sovereign power are excluded from coverage of the Byrd Amendment, but State-recognized Indian tribes and TDHEs established under State law are not excluded from the statute's coverage.

This application incorporates the Assurances and Certifications (HUD-424B) attached to this application or renews and incorporates for the funding you are seeking the Assurances and Certifications currently on file with HUD. To the best of my knowledge and belief, all information in this application is true and correct and constitutes material representation of fact upon which HUD may rely in awarding the agreement.

23. Signature of Authorized Official	Name (printed)
Title	Date (mm/dd/yyyy)

Instructions for the HUD-424

Public reporting burden for this collection of information is estimated to average 45 minutes per response, including the time for reviewing instructions, searching existing data sources, gathering and maintaining the data needed, and completing and reviewing the collection of information. HUD may not conduct or sponsor, and a person is not required to respond to, a collection of information unless that collection displays a valid OMB control number.

This form must be used by applicants requesting funding from the Department of Housing and Urban Development. This application form HUD-424 incorporates the Assurances and Certifications (HUD-424-B). You may either (1) attach the Assurances and Certifications to the application or (2) renew the certifications that you previously made on behalf of your organization and submitted to HUD if the legal name of your organization has not changed and you were the authorized representative who signed the Assurances and Certifications.

Item Number Instructions

1. Please indicate whether your application is for a formal application submission or a preliminary application (pre-application). HUD does not accept pre-applications for programs funded through the SuperNOFA.
2. Enter the date you are submitting your application to HUD.
3. This box will be completed by HUD. When received by HUD, your application will be stamped:
   (a) with a date; and
   (b) with the time received.
4. Leave Blank. This will be completed by the HUD program office receiving your application. When HUD accepts electronic applications for the grant program you are applying for, this number will be computer generated.
5. If your application is to renew or continue an existing grant, provide the existing grant number. If a new award, please leave blank.
6. Leave blank if you have not been provided a HUD ID number or user number. If you are a Public Housing Authority, enter your HUD issued Public Housing Authority ID number.
7. Enter the legal name of your organization applying for HUD funding.
8. Enter the name of the primary unit in your organization, if applicable, which will be responsible for the program.
9. Enter the complete address of your organization.
10. Enter the name, title, telephone number, fax number, and E-mail of the person to contact on matters related to your application.
11. Enter your organization's Employer Identification Number (EIN) as assigned by the Internal Revenue Service or if you are applying as an individual, your Social Security Number.
12. Choose from the list and enter the appropriate letter in the space provided. You must be an eligible applicant to apply for assistance. You must read the program information requirements to determine if you are a type of applicant that is eligible to apply for assistance under the program.
13. Enter the type of application you are submitting for funding consideration.

Check the appropriate box.

"New" means you are applying for a new grant award.

"Continuation" means you are requesting an extension of an existing award.

"Renewal" means you are requesting funding for renewal of an existing grant. e.g. Supportive Housing Program (SHP) or Shelter + Care grant.

"Revision" means you are submitting a revision prior to the application due date in response to HUD's request for clarification or modification to your initial submission.

14. Pre-filled.
15. Enter the Catalog of Federal Domestic Assistance (CFDA) number and title and, if applicable, component title of the program.
16. Enter a brief description of your program and key activities.
17. Identify the location(s) where your activities will take place. If this is the entire state, enter "Entire State".

18a. Enter the proposed start date.

18b. Enter the proposed end date.

19a. List the Congressional District(s) where your organization is located.

19b. List any Congressional District(s) where your program of activities or project sites will be located.

20. You must complete the funding matrix on page 2 of this form. Enter the following information:

Grant Program: The HUD funding program under which you are applying.

HUD Share: Please check the program requirements. Enter the amount of HUD funds you are requesting in your application.

Applicant Match: Enter the amount of funds or cash equivalent of in-kind contributions you are contributing to your project or program of activities.

Other Federal Share: Enter the amount of other Federal funds for your program of activities.

Instructions for the HUD-424 (Continued)

State Share: Enter the amount of funds or cash equivalent of in-kind services the State is providing to your project or program of activities.
Local/Tribal Share: Enter the amount of funds or cash equivalent of in-kind services your local/tribal government is providing to your project or program of activities.
Other: Enter the amount of other sources of private, non-profit, or other funds or cash equivalent of in-kind services being provided to your project or program of activities.
Program Income: Enter the amount of program income you expect to generate over the life of your award.
Total: Please total all columns and fill in the amounts.

21. You should contact the State Single Point of Contact (SPOC) for Federal Executive Order 12372 or check your application kit to determine whether the State Intergovernmental Review Process is required.

22. This question applies to your applicant organization, not the person signing as your organization's authorized representative. Categories of debt include disallowed costs that requires repayment to HUD.

23. To be signed by the authorized representative of your organization. A copy of your governing body's authorization for you to sign this application must be available in your organization's office.

Applicant Assurances and Certifications	U.S. Department of Housing and Urban Development	OMB Approval No. 2501-0017 (exp. 03/31/2005)

Instructions for the HUD-424-B Assurances and Certifications

As part of your application for HUD funding, you, as the official authorized to sign on behalf of your organization or an an individual must provide the following assurances and certifications. By signing this form, you are stating that to the best of your knowledge and belief, all assertions are true and correct.

As the duly authorized representative of the applicant, I certify that the applicant [Insert below the Name and title of the Authorized Representative, name of Organization and the date of signature]:

Name:_____, Title:_____.

Organization:_____, Date:_____.

1. Has the legal authority to apply for Federal assistance, has the institutional, managerial and financial capability (including funds to pay the non-Federal share of program costs) to plan, manage and complete the program as described in the application and the governing body has duly authorized the submission of the application, including these assurances and certifications, and authorized me as the official representative of the applicant to act in connection with the application and to provide any additional information as may be required.

2. Will administer the grant in compliance with Title VI of the Civil Rights Act of 1964 (42 U.S.C. 2000(d)) and implementing regulations (24 CFR Part 1), which provide that no person in the United States shall, on the grounds of race, color or national origin, be excluded from participation in, be denied the benefits of, or otherwise be subjected to discrimination under any program or activity that receives Federal financial assistance **OR** if the applicant is a Federally recognized Indian tribe or its tribally designated housing entity, is subject to the Indian Civil Rights Act (25 U.S.C. 1301-1303).

3. Will administer the grant in compliance with Section 504 of the Rehabilitation Act of 1973 (29 U.S.C. 794), as amended, and implementing regulations at 24 CFR Part 8, and the Age Discrimination Act of 1975 (42 U.S.C. 6101-07), as amended, and implementing regulations at 24 CFR Part 146 which together provide that no person in the United States shall, on the grounds of disability or age, be excluded from participation in, be denied the benefits of, or otherwise be subjected to discrimination under any program or activity that receives Federal financial assistance; except if the grant program authorizes or limits participation to designated populations, then the applicant will comply with the nondiscrimination requirements within the designated population.

4. Will comply with the Fair Housing Act (42 U.S.C. 3601-19), as amended, and the implementing regulations at 24 CFR Part 100, which prohibit discrimination in housing on the basis of race, color, religion, sex, disability, familial status, or national origin; except an applicant which is an Indian tribe or its instrumentality which is excluded by statute from coverage does not make this certification and further except if the grant program authorizes or limits participation to designated populations, then the applicant will comply with the nondiscrimination requirements within the designated population.

5. Will comply with the acquisition and relocation requirements of the Uniform Relocation Assistance and Real Property Acquisition Policies Act of 1970, as amended (42 U.S.C. 4601) and implementing regulations at 49 CFR Part 24 and 24 CFR 42, Subpart A.

6. Will comply with the environmental requirements of the National Environmental Policy Act (42 U.S.C. 4321 *et seq.*) and related Federal authorities prior to the commitment or expenditure of funds for property acquisition and physical development activities subject to implementing regulations at 24 CFR parts 50 or 58.

7. Will or will continue to provide a drug-free workplace by:

(a) Publishing a statement notifying employees that the unlawful manufacture, distribution, dispensing, possession, or use of a controlled substance is prohibited in the applicant's workplace and specifying the actions that will be taken against employees for violation of such prohibition;

(b) Establishing an on-going drug-free awareness program to inform employees about --

(1) The dangers of drug abuse in the workplace;

(2) The applicant's policy of maintaining a drug-free workplace;

(3) Any available drug counseling, rehabilitation, and employee assistance programs; and

(4) The penalties that may be imposed upon employees for drug abuse violations occurring in the workplace;

(c) Making it a requirement that each employee to be engaged in the performance of the grant be given a copy of the statement required in Paragraph (a);

(d) Notifying the employee in the statement required by paragraph (a) that, as a condition of employment under the grant, the employee will --

(1) Abide by the terms of the statement; and

(2) Notify the employer in writing of his or her conviction for a violation of a criminal drug statute occurring in the workplace no later than five calendar days after such conviction;

Applicant Assurances and Certifications (Continued)	U.S. Department of Housing and Urban Development	OMB Approval No. 2501-0017 (exp. 03/31/2005)

(e) Notifying the agency in writing, within ten calendar days after receiving notice under paragraph (d)(2) from an employee or otherwise receiving actual notice of such conviction. Employers of convicted employees must provide notice, including position title, to every grant officer or other designee on whose grant activity the convicted employee has worked, unless the Federal agency has designated a central point for the receipt of such notices. Notice shall include the identification number(s) of each affected grant;

(f) Taking one of the following actions, within 30 calendar days of receiving notice under paragraph (d)(2), with respect to any employee who is so convicted--

(1) Taking appropriate personnel action against such an employee, up to and including termination, consistent with the requirements of the Rehabilitation Act of 1973, as amended; or

(2) Requiring such employee to participate satisfactorily in a drug abuse assistance or rehabilitation program approved for such purposes by Federal, State, or local health, law enforcement, or other appropriate agency;

(g) Making a good faith effort to continue to maintain a drug-free workplace through implementation of paragraphs (a), (b), (c), (d), (e), and (f).

(h). The applicant may insert in the space provided below the site(s) for the performance of work or may provide this information in connection with each application.

(i). Place of Performance (street address, city, county, state, zip code)

8. In accordance with 24 CFR Part 24, and its principals:

(a) Are not presently debarred, suspended, proposed for debarment, declared ineligible, or voluntarily excluded from covered transactions by any Federal department or agency;

(b) Have not within a three year period preceding this proposal, been convicted of or had a civil judgement rendered against them for commission of fraud or a criminal offense in connection with obtaining, attempting to obtain, or performing a public (Federal, State or local) transaction; violation of Federal or State antitrust statutes or commission of embezzlement, theft, forgery, bribery, falsification, or destruction of records, making false statements, or receiving stolen property;

(c) Are not presently indicted for otherwise criminally or civilly charged by a governmental entity (Federal, State, or local) with commission of any of the offenses enumerated in the preceding paragraph of this certification; and

(d) Where the applicant is unable to certify to any of the statements in this certification, an explanation shall be attached.

(e) Will include the clause titled "Certification Regarding Debarment, Suspension, Ineligibility, and Voluntary Exclusion - Lower Tier Covered Transaction, " provided by the HUD without modification, in all lower tier covered transactions and in all solicitations for lower tier covered transactions.

These certifications and assurances are material representations of the fact upon which HUD can rely when awarding a grant. If it is later determined that I, the applicant, knowingly made an erroneous certifications or assurance, I may be subject to criminal prosecution. HUD may also terminate the grant and take other available remedies.

U.S. Department of Housing and Urban Development (HUD)
Urban Scholars Postdoctoral Fellowship Program –
Administered by the National Research Council

Budget Instructions

On a separate sheet of paper entitled Project Budget, place your name, project title, and project dates at the top of the page. Provide a moderately detailed (usually one page) project budget, giving individual totals for each type of proposed cost.

A sample budget is shown below. The categories of expenses shown do not necessarily apply to all applications, and some applications may have expense categories not shown. The sample is representative, not binding.

Sample Budget

Name:
Project Title:
Project Dates:

Personnel	Request From Sponsor	In-kind Contributions	Totals
Principal Investigator (name)			
16.67% effort AY (cost-shared)	$2,500	$7,980	$10,480
100% effort summer (3 months)	$20,956	$0	$20,956
Graduate student project assistant			
10 hours/week @$20/hour	$12,600	$0	$12,600
Total salaries	$36,056	$7,890	$44,036
Fringe benefits @24.5% of salaries	$8,834	$1,955	$10,789
Total Salaries and Benefits	$44,890	$9,935	$54,825
Other than personnel services (OTPS)			
Software/documentation	$1,500	$0	$1,500
Travel: 3 2-day trips @$1,500/trip	$4,500	$0	$4,500
Total, OTPS	$6,000	$0	$6,000
Total Direct Costs (TDC)	$50,890	$9,935	$60,825
Indirect Costs @ 8% of TDC*	$4,071	$27,558	$31,629
Total Project Costs	$54,961	$37,493	$92,454

***Budget Note:**

_____ (institution) negotiated indirect cost rate is 52% of Modified Total Direct Costs. The _____ (institution) in-kind contribution represents the difference between the 52% and 8% rate allowed (for request from sponsor), plus the full 52% rate applied to in-kind total direct costs.

DISCLOSURE OF LOBBYING ACTIVITIES

Approved by OMB 0348-0046

Complete this form to disclose lobbying activities pursuant to 31 U.S.C. 1352
(See reverse for public burden disclosure.)

1. Type of Federal Action:	2. Status of Federal Action:	3. Report Type:
☐ a. contract b. grant c. cooperative agreement d. loan e. loan guarantee f. loan insurance	☐ a. bid/offer/application b. initial award c. post-award	☐ a. initial filing b. material change **For Material Change Only:** year _____ quarter _____ date of last report _____

4. Name and Address of Reporting Entity:	5. If Reporting Entity in No. 4 is a Subawardee, Enter Name and Address of Prime:
☐ Prime ☐ Subawardee Tier _____, *if known*: **Congressional District**, *if known*:	 **Congressional District**, *if known*:
6. Federal Department/Agency:	**7. Federal Program Name/Description:** CFDA Number, *if applicable*: _____
8. Federal Action Number, *if known*:	**9. Award Amount**, *if known*: $
10. a. Name and Address of Lobbying Registrant (*if individual, last name, first name, MI*):	**b. Individuals Performing Services** (*including address if different from No. 10a*) (*last name, first name, MI*):
11. Information requested through this form is authorized by title 31 U.S.C. section 1352. This disclosure of lobbying activities is a material representation of fact upon which reliance was placed by the tier above when this transaction was made or entered into. This disclosure is required pursuant to 31 U.S.C. 1352. This information will be reported to the Congress semi-annually and will be available for public inspection. Any person who fails to file the required disclosure shall be subject to a civil penalty of not less that $10,000 and not more than $100,000 for each such failure.	Signature: _____ Print Name: _____ Title: _____ Telephone No.: _____ Date: _____
Federal Use Only:	Authorized for Local Reproduction Standard Form LLL (Rev. 7-97)

Race and Ethnic Data Reporting Form

U.S. Department of Housing and Urban Development
Office of Administration

OMB Approval No. 2535-0113
(exp. 08/31/2003)

Program Title:

Grantee/Recipient Name:

Grantee Reporting Organization:

Reporting Period From (mm/dd/yyyy): _____ **To** (mm/dd/yyyy): _____

Racial Categories	**Total Number of Racial Categories Reported**	**Total Number of Ethnic Category Responses** (Hispanic or Latino)
American Indian or Alaska Native		
Asian		
Black or African American		
Native Hawaiian or Other Pacific Islander		
White		
American Indian or Alaska Native *and* White		
Asian *and* White		
Black or African American *and* White		
American Indian or Alaska Native *and* Black or African American		
* Other multi-racial categories: [Per the form instructions, write in a description using the box on the right]		
Balance of individuals reporting more than one race		
Total:		

* If the aggregate count of any reported multi-racial category that is not listed above exceeds 1% of the total population being reported, you should separately indicate each such category here. Also indicate the total number of such other multi-racial categories reported, the population percentage, and the total number of positive ethic category responses.

Public reporting burden for this collection is estimated to average 1.15 hours per response, including the time for reviewing instructions, searching existing data sources, gathering the data needed, and completing and reviewing the information collection instrument. HUD may not collect this information, and you are not required to complete this form unless it displays a currently valid OMB control number.

form **HUD-27061** (2/2003)

Instructions for the Race and Ethnic Data Reporting form (HUD-27061)

A. General Instructions:

This form is intended to be used by two categories of respondents: (1) applicants requesting funding from the Department of Housing and Urban Development (HUD); and (2) organizations who receive HUD Federal financial assistance that are required to report race and ethnic information.

In compliance with OMB direction to revise the standards for collection of racial data, HUD has revised its standards as depicted on this form. The revised standards are designed to acknowledge the growing diversity of the U.S. population. Using the revised standards, HUD offers organizations that are responding to HUD data requests for racial information, the option of selecting one or more of nine racial categories to identify the racial demographics of the individuals and/or the communities they serve, or are proposing to serve. HUD's collection of racial data treats ethnicity as a separate category from race and has changed the terminology for certain racial and ethnic groups from the way it has been requested in the past using two distinct ethnic categories. The revised definitions of ethnicity and race have been standardized across the Federal government and are provided below.

1. The two ethnic categories as revised by the Office of Management and Budget (OMB) are defined below.

   Hispanic or Latino. A person of Cuban, Mexican, Puerto Rican, South or Central American, or other Spanish culture or origin, regardless of race. The term "Spanish origin" can be used in addition to "Hispanic" or "Latino."

   Not Hispanic or Latino. A person not of Cuban, Mexican, Puerto Rican, South or Central American, or other Spanish culture or origin, regardless of race.

2. The five racial categories as revised by the Office of Management and Budget are defined below:

   American Indian or Alaska Native. A person having origins in any of the original peoples of North and South America (including Central America), and who maintains tribal affiliation or community attachment.

   Asian. A person having origins in any of the original peoples of the Far East, Southeast Asia, or the Indian subcontinent including, for example, Cambodia, China, India, Japan, Korea, Malaysia, Pakistan, the Philippine Islands, Thailand, and Vietnam.

   Black or African American. A person having origins in any of the black racial groups of Africa. Terms such as "Haitian" or "Negro" can be used in addition to "Black" or "African American."

   Native Hawaiian or Other Pacific Islander. A person having origins in any of the original peoples of Hawaii, Guam, Samoa, or other Pacific Islands.

   White. A person having origins in any of the original peoples of Europe, the Middle East or North Africa.

   Note: The information required to be reported may be collected and submitted to HUD via the use of this form or by other means, such as summary reports or via electronic reporting mechanisms. The primary goal to be achieved is the provision of the summary racial and ethic data of the population(s) proposed to be served or that is being served by your organization in a consistent manner across all HUD programs.

B. Specific Instructions for Completing the Form:

Organizations using this form should collect the individual responses from the community of individuals you intend to serve or those that you are serving, as applicable. After the individual collections are gathered, you should report (via this form or by the use of other means such as electronic reports that provide the summary data required by this form) the aggregate totals of the racial and ethnic data that you collect via the applicable categories as described below:

Total Number of Racial Categories Reported: Under this column you should indicate the total number of responses collected in the blocks next to the applicable categories.

Total Number of Ethnic Category Responses (Hispanic or Latino): Under this column you should indicate the total number of responses collected in the blocks next to the applicable racial categories (e.g., you would enter the total number of Asian respondents that indicated they are Hispanic or Latino). When collecting this information from beneficiaries of the Federal financial assistance all respondents should be required to indicate their ethnic category, which requires either a "yes" or "no" response.

Other multi-racial categories: Next to this racial category, indicate all racial categories (if any) identified by respondents that do not fit the nine racial categories above, and which have a total count that exceeds one percent of the total population being reported. You must identify each such racial category, including the actual count, the percentage of the total population (in parenthesis), and the actual count for the ethnic categories.

For example, if you obtain data that indicates that the total population being served is 200 and includes 10 Cajun Americans and 12 Creole Americans, and those numbers of Cajun and Creole Americans each equates to more than one percent of the total population being served, and 2 of the Cajun Americans indicate they belong to the Hispanic/Latino ethic category and 3 of the Creole Americans indicate they belong to the Hispanic/Latino ethnic category, you should complete the form as follows:

Racial Categories	Total Number of Racial Categories Reported	Total Number of Ethnic Category Responses (Hispanic or Latino)
* Other multi-racial categories: [Per the form instruction, write in a description using the box on the right]	Cajun American 10 (5%) Creole American 12 (6%)	2 3

How the percentage should be applied will vary by program depending on whether the program is required to provide data on the total community, or on the beneficiaries/individuals that are being served or that are proposed to be served.

Balance of individuals reporting more than one race: This block is intended to capture the balance of any racial categories that are not included in the list of nine above, and are not included under **"Other multi-racial categories."** Indicate the total number of all racial categories reported that do not fit the nine racial categories above, and do not equate to one percent of the total population being reported. Be sure to also indicate the total number of all such ethnic categories.

Total: On the last row of the form you should indicate the aggregate totals of all the information you have gathered including the total of all racial categories and the total of all the ethic categories.

Applicant/Recipient Disclosure/Update Report

U.S. Department of Housing and Urban Development

OMB Approval No. 2510-0011 (exp. 06/30/2003)

Instructions. (See Public Reporting Statement and Privacy Act Statement and detailed instructions on page 2.)

Applicant/Recipient Information

Indicate whether this is an Initial Report ☐ **or an Update Report** ☐

1. Applicant/Recipient Name, Address, and Phone (include area code): ( ) -	2. Social Security Number or Employer ID Number: - -
3. HUD Program Name	4. Amount of HUD Assistance Requested/Received

5. State the name and location (street address, City and State) of the project or activity:

Part I Threshold Determinations

1. Are you applying for assistance for a specific project or activity? These terms do not include formula grants, such as public housing operating subsidy or CDBG block grants. (For further information see 24 CFR Sec. 4.3).
☐ **Yes** ☐ **No**

2. Have you received or do you expect to receive assistance within the jurisdiction of the Department (HUD), involving the project or activity in this application, in excess of $200,000 during this fiscal year (Oct. 1 - Sep. 30)? For further information, see 24 CFR Sec. 4.9
☐ **Yes** ☐ **No.**

If you answered "**No**" to either question 1 or 2, **Stop**! You do not need to complete the remainder of this form. ***However***, you must sign the certification at the end of the report.

Part II Other Government Assistance Provided or Requested / Expected Sources and Use of Funds.

Such assistance includes, but is not limited to, any grant, loan, subsidy, guarantee, insurance, payment, credit, or tax benefit.

Department/State/Local Agency Name and Address	Type of Assistance	Amount Requested/Provided	Expected Uses of the Funds

(**Note**: Use Additional pages if necessary.)

Part III Interested Parties. You must disclose:

1. All developers, contractors, or consultants involved in the application for the assistance or in the planning, development, or implementation of the project or activity and
2. any other person who has a financial interest in the project or activity for which the assistance is sought that exceeds $50,000 or 10 percent of the assistance (whichever is lower).

Alphabetical list of all persons with a reportable financial interest in the project or activity (For individuals, give the last name first)	Social Security No. or Employee ID No.	Type of Participation in Project/Activity	Financial Interest in Project/Activity ($ and %)

(**Note**: Use Additional pages if necessary.)

Certification

Warning: If you knowingly make a false statement on this form, you may be subject to civil or criminal penalties under Section 1001 of Title 18 of the United States Code. In addition, any person who knowingly and materially violates any required disclosures of information, including intentional non-disclosure, is subject to civil money penalty not to exceed $10,000 for each violation.

I certify that this information is true and complete.

Signature: X	Date: (mm/dd/yyyy)

Public reporting burden for this collection of information is estimated to average 2.0 hours per response, including the time for reviewing instructions, searching existing data sources, gathering and maintaining the data needed, and completing and reviewing the collection of information. This agency may not conduct or sponsor, and a person is not required to respond to, a collection information unless that collection displays a valid OMB control number.

Privacy Act Statement. Except for Social Security Numbers (SSNs) and Employer Identification Numbers (EINs), the Department of Housing and Urban Development (HUD) is authorized to collect all the information required by this form under section 102 of the Department of Housing and Urban Development Reform Act of 1989, 42 U.S.C. 3531. Disclosure of SSNs and EINs is optional. The SSN or EIN is used as a unique identifier. The information you provide will enable HUD to carry out its responsibilities under Sections 102(b), (c), and (d) of the Department of Housing and Urban Development Reform Act of 1989, Pub. L. 101-235, approved December 15, 1989. These provisions will help ensure greater accountability and integrity in the provision of certain types of assistance administered by HUD. They will also help ensure that HUD assistance for a specific housing project under Section 102(d) is not more than is necessary to make the project feasible after taking account of other government assistance. HUD will make available to the public all applicant disclosure reports for five years in the case of applications for competitive assistance, and for generally three years in the case of other applications. Update reports will be made available along with the disclosure reports, but in no case for a period generally less than three years. All reports, both initial reports and update reports, will be made available in accordance with the Freedom of Information Act (5 U.S.C. §552) and HUD's implementing regulations at 24 CFR Part 15. HUD will use the information in evaluating individual assistance applications and in performing internal administrative analyses to assist in the management of specific HUD programs. The information will also be used in making the determination under Section 102(d) whether HUD assistance for a specific housing project is more than is necessary to make the project feasible after taking account of other government assistance. You must provide all the required information. Failure to provide any required information may delay the processing of your application, and may result in sanctions and penalties, including imposition of the administrative and civil money penalties specified under 24 CFR §4.38.

Note: This form only covers assistance made available by the Department. States and units of general local government that carry out responsibilities under Sections 102(b) and (c) of the Reform Act must develop their own procedures for complying with the Act.

Instructions

Overview.

A. Coverage. You must complete this report if:

(1) You are applying for assistance from HUD for a specific project or activity **and** you have received, or expect to receive, assistance from HUD in excess of $200,000 during the during the fiscal year;

(2) You are updating a prior report as discussed below; or

(3) You are submitting an application for assistance to an entity other than HUD, a State or local government if the application is required by statute or regulation to be submitted to HUD for approval or for any other purpose.

B. Update reports (filed by "Recipients" of HUD Assistance): General. All recipients of covered assistance must submit update reports to the Department to reflect substantial changes to the initial applicant disclosure reports.

Line-by-Line Instructions.

Applicant/Recipient Information.

All applicants for HUD competitive assistance, must complete the information required in blocks 1-5 of form HUD-2880:

1. Enter the full name, address, city, State, zip code, and telephone number (including area code) of the applicant/recipient. Where the applicant/recipient is an individual, the last name, first name, and middle initial must be entered.
2. Entry of the applicant/recipient's SSN or EIN, as appropriate, is optional.
3. Applicants enter the HUD program name under which the assistance is being requested.
4. Applicants enter the amount of HUD assistance that is being requested. Recipients enter the amount of HUD assistance that has been provided and to which the update report relates. The amounts are those stated in the application or award documentation. NOTE: In the case of assistance that is provided pursuant to contract over a period of time (such as project-based assistance under section 8 of the United States Housing Act of 1937), the amount of assistance to be reported includes all amounts that are to be provided over the term of the contract, irrespective of when they are to be received.
5. Applicants enter the name and full address of the project or activity for which the HUD assistance is sought. Recipients enter the name and full address of the HUD-assisted project or activity to which the update report relates. The most appropriate government identifying number must be used (e.g., RFP No.; IFB No.; grant announcement No.; or contract, grant, or loan No.) Include prefixes.

Part I. Threshold Determinations - Applicants Only

Part I contains information to help the applicant determine whether the remainder of the form must be completed. **Recipients filing Update Reports should not complete this Part.**

If the answer to ***either*** questions 1 or 2 is No, the applicant need not complete Parts II and III of the report, but must sign the certification at the end of the form.

Part II. Other Government Assistance and Expected Sources and Uses of Funds.

A. Other Government Assistance. This Part is to be completed by both applicants and recipients for assistance and recipients filing update reports. Applicants and recipients must report any other government assistance involved in the project or activity for which assistance is sought. Applicants and recipients must report any other government assistance involved in the project or activity. Other government assistance is defined in note 4 on the last page. For purposes of this definition, other government assistance is expected to be made available if, based on an assessment of all the circumstances involved, there are reasonable grounds to anticipate that the assistance will be forthcoming.

Both applicant and recipient disclosures must include all other government assistance involved with the HUD assistance, as well as any other government assistance that was made available before the request, but that has continuing vitality at the time of the request. Examples of this latter category include tax credits that provide for a number of years of tax benefits, and grant assistance that continues to benefit the project at the time of the assistance request.

The following information must be provided:

1. Enter the name and address, city, State, and zip code of the government agency making the assistance available.
2. State the type of other government assistance (e.g., loan, grant, loan insurance).
3. Enter the dollar amount of the other government assistance that is, or is expected to be, made available with respect to the project or activities for which the HUD assistance is sought (applicants) or has been provided (recipients).
4. Uses of funds. Each reportable use of funds must clearly identify the purpose to which they are to be put. Reasonable aggregations may be used, such as "total structure" to include a number of structural costs, such as roof, elevators, exterior masonry, etc.

B. Non-Government Assistance. Note that the applicant and recipient disclosure report must specify all expected sources and uses of funds - both from HUD ***and any other source*** - that have been or are to be, made available for the project or activity. Non-government sources of

funds typically include (but are not limited to) foundations and private contributors.

Part III. Interested Parties.

This Part is to be completed by both applicants and recipients filing update reports. Applicants must provide information on:

1. All developers, contractors, or consultants involved in the application for the assistance or in the planning, development, or implementation of the project or activity and
2. any other person who has a financial interest in the project or activity for which the assistance is sought that exceeds $50,000 or 10 percent of the assistance (whichever is lower).
   Note: A financial interest means any financial involvement in the project or activity, including (but not limited to) situations in which an individual or entity has an equity interest in the project or activity, shares in any profit on resale or any distribution of surplus cash or other assets of the project or activity, or receives compensation for any goods or services provided in connection with the project or activity. Residency of an individual in housing for which assistance is being sought is not, by itself, considered a covered financial interest.

The information required below must be provided.

1. Enter the full names and addresses. If the person is an entity, the listing must include the full name and address of the entity as well as the CEO. Please list all names alphabetically.
2. Entry of the Social Security Number (SSN) or Employee Identification Number (EIN), as appropriate, for each person listed is optional.
3. Enter the type of participation in the project or activity for each person listed: i.e., the person's specific role in the project (e.g., contractor, consultant, planner, investor).
4. Enter the financial interest in the project or activity for each person listed. The interest must be expressed both as a dollar amount and as a percentage of the amount of the HUD assistance involved.

Note that if any of the source/use information required by this report has been provided elsewhere in this application package, the applicant need not repeat the information, but need only refer to the form and location to incorporate it into this report. (It is likely that some of the information required by this report has been provided on SF 424A, and on various budget forms accompanying the application.) If this report requires information beyond that provided elsewhere in the application package, the applicant must include in this report all the additional information required.

Recipients must submit an update report for any change in previously disclosed sources and uses of funds as provided in Section I.D.5., above.

Notes:

1. All citations are to 24 CFR Part 4, which was published in the Federal Register. [April 1, 1996, at 63 Fed. Reg. 14448.]
2. Assistance means any contract, grant, loan, cooperative agreement, or other form of assistance, including the insurance or guarantee of a loan or mortgage, that is provided with respect to a specific project or activity under a program administered by the Department. The term does not include contracts, such as procurements contracts, that are subject to the Fed. Acquisition Regulation (FAR) (48 CFR Chapter 1).
3. See 24 CFR §4.9 for detailed guidance on how the threshold is calculated.
4. "Other government assistance" is defined to include any loan, grant, guarantee, insurance, payment, rebate, subsidy, credit, tax benefit, or any other form of direct or indirect assistance from the Federal government (other than that requested from HUD in the application), a State, or a unit of general local government, or any agency or instrumentality thereof, that is, or is expected to be made, available with respect to the project or activities for which the assistance is sought.
5. For the purpose of this form and 24 CFR Part 4, "person" means an individual (including a consultant, lobbyist, or lawyer); corporation; company; association; authority; firm; partnership; society; State, unit of general local government, or other government entity, or agency thereof (including a public housing agency); Indian tribe; and any other organization or group of people.

Logic Model

U.S. Department of Housing and Urban Development
Office of Departmental Grants Management and Oversight

OMB Approval No. 2535-0114
(exp. 9/30/2003)

Program Name:_____

Component Name:_____

Strategic Goals	Policy Priorities	Problem, Need, Situation	Service or Activity	Benchmarks		Outcomes		Measurement Reporting Tools	Evaluation Process
				Output Goal	Output Result	Achievement Outcome Goals	End Results		
1		2	3	4	5	6	7	8	9
Policy		Planning		Intervention		Impact		Accountability	
				Short Term				a. b. c. d. e.	
				Intermediate Term				a. b. c. d. e.	
				Long Term				a. b. c. d. e.	

HUD's Strategic Goals

1. Increase homeownership opportunities.
2. Promote decent affordable housing.
3. Strengthen communities.
4. Ensure equal opportunity in housing.
5. Embrace high standards of ethics, management, and accountability.
6. Promote participation of grass-roots faith-based and other community-based organizations.

Policy Priorities

1. Providing Increased Homeownership and Rental Opportunities for Low- and Moderate-Income Persons, Persons with Disabilities, the Elderly, Minorities, and Families with Limited English Proficiency.
2. Improving the Quality of Life in our Nation's Communities.
3. Encouraging Accessible Design Features.
4. Providing Full and Equal Access to Grass-Roots Faith-Based and Other Community-Based Organizations in HUD Program Implementation.
5. Improving Housing Conditions in Colonias.
6. Increasing Participation of Minority Serving Institutions in HUD Programs.
7. Increasing Participation in Energy Star.
8. Ending Chronic Homelessness in Ten Years.

form **HUD-96010** (04/2003)

Logic Model Instructions U.S. Department of Housing And Urban Development Office of Departmental Grants Management and Oversight

OMB Approval No. 2535-0114 (exp. 9/30/2003)

The public reporting burden for this collection of information for the Logic Model is estimated to average 2 hours per response for applicants, including the time for reviewing instructions, searching existing data sources, gathering and maintaining the data needed, and completing and reviewing the collection of information and preparing the application package for submission to HUD. HUD may not conduct, and a person is not required to respond to, a collection of information unless the collection displays a valid control number. Send comments regarding this burden estimate or any other aspect of this collection of information, including suggestions to reduce this burden, to the Reports Management Officer, Paperwork Reduction Project, in the Office of Information Technology, U.S. Department of Housing and Urban Development, Washington, DC 20410-3600. When providing comments, please refer to OMB Approval No. 2535-0114.

The information submitted in response to the Notice of Funding Availability for the Logic Model is subject to the disclosure requirements of the Department of Housing and Urban Development Reform Act of 1989 (Public Law 101-235, approved December 15, 1989, 42 U.S.C. 3545).

Instructions:

Responses to rating factor five should be in this format. Your response should be in bullet format rather than narrative. Please read each NOFA carefully to ensure the performance measures requested for this factor are reflected on the logic model form.

Program Name: The HUD funding program under which you are applying. If you are applying for a component of a program please include the Program Name as well as the Component Name.

Component Name: The HUD funding program under which you are applying.

Column 1: ***HUD's Strategic Goals***: Indicate in this column **the number** of the goal(s) that your proposed service or activity is designed to achieve. HUD's strategic goals are:

1. Increase homeownership opportunities.
2. Promote decent affordable housing.
3. Strengthen communities.
4. Ensure equal opportunity in housing.
5. Embrace high standards of ethics, management, and accountability.
6. Promote participation of grass-roots faith-based and other community-based organizations.

***Policy Priority*:** Indicate in this column **the number** of the HUD Policy Priority(ies), if any, your proposed service or activity promotes. Applicants are encouraged to undertake specific activities that will assist the Department in implementing its Policy Priorities. HUD's Policy Priorities are:

form **HUD-96010-I** (04/2003)

1. Providing Increased Homeownership and Rental Opportunities for Low- and Moderate-Income Persons, Persons with Disabilities, the Elderly, Minorities, and Families with Limited English Proficiency.
2. Improving the Quality of Life in our Nation's Communities.
3. Encouraging Accessible Design Features.
4. Providing Full and Equal Access to Grass-Roots Faith-Based and Other Community-Based Organizations in HUD Program Implementation.
5. Improving Housing Conditions in Colonias.
6. Increasing Participation of Minority Serving Institutions in HUD Programs.
7. Increasing Participation in Energy Star.
8. Ending Chronic Homelessness in Ten Years

Column 2: **Problem, Need, or Situation**: Provide a general statement of need that provides the rationale for the proposed service or activity.

Column 3: **Service or Activity:** Identify the activities or services that you are undertaking in your work plan, which are crucial to the success of your program. Not every activity or service yields a direct outcome.

Column 4 and Column 5: **Benchmarks:** These columns ask you to identify benchmarks that will be used in measuring the progress of your services or activities. Column 4 asks for specific interim or final products (called outputs) that you establish for your program's services or activities. Column 5 should identify the results associated with the product or output. These may be numerical measures characterizing the results of a program activity, service or intervention and are used to measure performance. These outputs should lead to targets for achievement of outcomes. Results should be represented by both the actual # and % of the goal achieved.

> Column 4: **Benchmarks/Output Goal:** Set quantifiable output goals, including timeframes. These should be products or interim products, which will allow you and HUD to monitor and assess your progress in achieving your program workplan.
>
> Column 5: **Benchmark/ Output Result:** Report actual result of your benchmarks. The actual result could be number of housing units developed or rehabilitated, jobs created, or number of persons assisted. Outputs may be short, intermediate or long-term.

Column 6 and Column 7: **Outcomes:** Column 6 and Column 7 ask you to report on your expected and actual outcomes – the ultimate impact you hope to achieve. Column 6 asks you to identify outcomes in terms of the impact on the community, people's lives, changes in economic or social status, etc. Column 7 asks for the actual result of the outcome measure listed in Column 6, which should be updated as applicable.

Column 6: **Outcomes/ Goals:** Identify the outcomes that resulted in broader impacts for individuals, families/households, and/or the community. For example, the program may seek to improve the environmental conditions in a neighborhood, increase affordable housing, increase the assets of a low-income family, or improve self-sufficiency.

Proxy Outcome(s): Often direct measurement of the intended outcome is difficult or even impossible -- to measure. In these cases, applicants/grantees should use a proxy or surrogate measure that corresponds with the desired outcome. For example, improving quality of life in a neighborhood could be measured by a proxy indicator such as increases in home prices or decreases in crime. Training programs could be measured by the participant's increased wages or reading skills. The person receiving the service must meet eligibility requirements of the program.

Column 7: **Outcomes/Actual Result:** Identify specific achievements of outcomes listed in Column 6.

Column 8: **Measurement Reporting Tools:** (a) List the tools used to track output or outcome information (e.g., survey instrument; attendance log; case report; pre-post test; waiting list; etc); (b) Identify the place where data is maintained, e.g. central database; individual case records; specialized access database, tax assessor database; local precinct; other; (c) Identify the location, e.g. on-site; subcontractor; other; (d) Indicate how often data is required to be collected, who will collect it and how often data is reported to HUD; and (e) Describe methods for retrieving data, e.g. data from case records is retrieved manually, data is maintained in an automated database. This tool will be available for HUD review and monitoring and should be used in submitting reporting information.

Column 9: **Evaluation Process:** Identify the methodology you will periodically use to assess your success in meeting your benchmark output goals and output results, outcomes associated to the achievement of the purposes of the program, as well as the impact that the work has made on the individuals assisted, the community, and the strategic goals of the Department. If you are not meeting the goals and results projected for your performance period, the evaluation process should be used as a tool to ensure that you can adjust schedules, timing, or business practices to ensure that goals are met within your performance period.

form **HUD-96010** (04/2003)

[FR Doc. 03–25678 Filed 10–9–03; 8:45 am]
BILLING CODE 4210–62–C

Federal Register

Friday,
October 10, 2003

Part VI

Department of Health and Human Services

Food and Drug Administration

21 CFR Parts 1 and 20

Registration of Food Facilities Under the Public Health Security and Bioterrorism Preparedness and Response Act of 2002; Interim Rule

Prior Notice of Imported Food Under the Public Health Security and Bioterrorism Preparedness and Response Act of 2002; Interim Rule

Risk Assessment for Food Terrorism and Other Food Safety Concerns; Availability; Notice

DEPARTMENT OF HEALTH AND HUMAN SERVICES

Food and Drug Administration

21 CFR Parts 1 and 20

[Docket No. 02N–0276]

RIN 0910–AC40

Registration of Food Facilities Under the Public Health Security and Bioterrorism Preparedness and Response Act of 2002

AGENCY: Food and Drug Administration, HHS.

ACTION: Interim final rule.

SUMMARY: The Food and Drug Administration (FDA) is issuing an interim final regulation that requires domestic and foreign facilities that manufacture/process, pack, or hold food for human or animal consumption in the United States to register with FDA by December 12, 2003. The interim final rule implements the Public Health Security and Bioterrorism Preparedness and Response Act of 2002 (the Bioterrorism Act), which requires domestic and foreign facilities to register with FDA by December 12, 2003, even in the absence of a final regulation. Registration is one of several tools that will enable FDA to act quickly in responding to a threatened or actual terrorist attack on the U.S. food supply by giving FDA information about facilities that manufacture/process, pack, or hold food for consumption in the United States. In the event of an outbreak of foodborne illness, such information will help FDA and other authorities determine the source and cause of the event. In addition, the registration information will enable FDA to notify quickly the facilities that might be affected by the outbreak.

DATES: This interim final rule is effective December 12, 2003. Submit written or electronic comments by December 24, 2003.

FOR FURTHER INFORMATION CONTACT: Leslye M. Fraser, Center for Food Safety and Applied Nutrition (HFS–4), Food and Drug Administration, 5100 Paint Branch Pkwy., College Park, MD 20740, 301–436–2378.

ADDRESSES: Submit written comments to the Division of Dockets Management (HFA–305), Food and Drug Administration, 5630 Fishers Lane, rm. 1061, Rockville, MD 20852. Submit electronic comments to *http://www.fda.gov/dockets/ecomments.*

SUPPLEMENTARY INFORMATION:

Table of Contents

I. Background and Legal Authority
II. Highlights of the Interim Final Rule and Summary of the Significant Changes Made to the Proposed Rule
III. Comments on the Proposed Rule
A. General Comments
B. Foreign Trade Issues
C. Comments on ''Who Must Register Under This Subpart?'' (Proposed § 1.225)
D. Comments on ''Who is Exempt from This Subpart?'' (Proposed § 1.226)
E. Comments on ''What Definitions Apply to This Subpart?'' (Proposed § 1.227)
F. Comments on ''When Must You Register?'' (Proposed § 1.230)
G. Comments on ''How and Where Do You Register?'' (Proposed § 1.231)
H. Comments on ''What Information is Required in the Registration?'' (Proposed § 1.232)
I. Comments on ''What Optional Items are Included in the Registration Form?'' (Proposed § 1.233)
J. Comments on ''How and When Do You Update Your Registration Information?'' (Proposed § 1.234)
K. Comments on ''What Other Registration Requirements Apply?'' (Proposed § 1.240)
L. Comments on ''What Happens if You Fail to Register?'' (Proposed § 1.241)
M. Comments on ''What Does Assignment of a Registration Number Mean?'' (Proposed § 1.242)
N. Comments on ''Is Food Registration Information Available to the Public?'' (Proposed § 1.243)
IV. Analysis of Economic Impacts
A. Final Regulatory Impact Analysis
V. Final Regulatory Flexibility Analysis
VI. Unfunded Mandates
VII. Small Business Regulatory Enforcement Fairness Act (SBREFA) Major Rule
VIII. Paperwork Reduction Act of 1995
IX. Request for Comments
X. Analysis of Environmental Impact
XI. Federalism
XII. References

I. Background and Legal Authority

On February 3, 2003 (68 FR 5378), FDA and the Department of the Treasury jointly issued a proposed rule requiring certain food facilities to register with FDA. The events of September 11, 2001, had highlighted the need to enhance the security of the infrastructure of the United States, including the food supply. Congress had responded by enacting the Bioterrorism Act (Pub. L. 107–188), which was signed into law on June 12, 2002. The Bioterrorism Act includes a provision in title III (Protecting Safety and Security of Food and Drug Supply), Subtitle A—Protection of Food Supply, section 305, which requires the Secretary of Health and Human Services (the Secretary) to develop a regulation to require domestic and foreign facilities that manufacture, process, pack, or hold food for consumption in the United States to register with FDA by December 12, 2003. The provision creates section 415 and amends sections 301 and 801 of the Federal Food, Drug, and Cosmetic Act (the FD&C Act) (21 U.S.C. 331 and 381). The Bioterrorism Act also requires FDA to issue regulations mandating prior notice of imported food shipments (section 307), directs FDA to issue regulations regarding the maintenance of certain records (section 306), and grants FDA the authority to administratively detain food (section 303). FDA and the Department of the Treasury have jointly published proposed rules implementing section 307 (68 FR 5428, February 3, 2003), and FDA has published proposed rules implementing section 303 (68 FR 25242, May 9, 2003), and section 306 (68 FR 25188, May 9, 2003). The prior notice interim final rule appears elsewhere in this issue of the **Federal Register**.

The major components of section 305 of the Bioterrorism Act are as follows:

- The owner, operator, or agent in charge of a facility is responsible for the submission of a registration to FDA;
- Each facility must be separately registered and the registration must include the name and address of the facility, and all trade names under which the registrant conducts business from that facility. The registration for foreign facilities also must include the name of the U.S. agent for the facility;
- FDA also may require each registration to include the general food category (as identified under § 170.3 (21 CFR 170.3)) of the food manufactured, processed, packed, or held at the facility, if FDA determines through guidance that this submission is necessary. FDA issued guidance on July 17, 2003 (68 FR 42415), available at *http://www.fda.gov/oc/bioterrorism/bioact.html,* that concluded that information about food product categories is necessary for a quick, accurate, and focused response to an actual or potential bioterrorist incident or other food-related emergency;
- Foreign facilities that manufacture/process, pack, or hold food that is exported for consumption in the United States are required to register unless the food undergoes further processing or packaging at another facility outside the United States;
- Establishments excluded from the registration requirement are farms, restaurants and other retail food establishments, nonprofit food establishments, and fishing vessels (except those engaged in processing as defined in § 123.3(k) (21 CFR 123.3(k));
- FDA shall notify the registrant when it has received the registration

and assign a unique registration number to each registered facility;

• FDA may encourage electronic registration;

• Registered facilities must notify FDA in a timely manner of changes to their registration information;

• FDA is required to compile and maintain an up-to-date list of registered facilities; and

• FDA's list of facilities and registration documents are not subject to public disclosure under 5 U.S.C. 552 (the Freedom of Information Act). Information derived from this list or these documents is also not subject to such disclosure to the extent that it discloses the identity or location of a specific registered facility.

In addition to section 305 of the Bioterrorism Act, FDA is relying on section 701(a) and (b) of the FD&C Act (21 U.S.C. 371(a) and (b)) in issuing this interim final rule. Section 701(a) authorizes the agency to issue regulations for the efficient enforcement of the act, while section 701(b) of the FD&C Act authorizes FDA and the Department of Treasury jointly to prescribe regulations for the efficient enforcement of section 801 of the FD&C Act (21 U.S.C. 381).

This interim final rule implements the food facility registration requirements in section 305 of the Bioterrorism Act. Elsewhere in this issue of the **Federal Register**, FDA is issuing an interim final rule implementing section 307 (prior notice of imported food). The two interim final rules published in this issue of the **Federal Register**, as well as the regulations FDA will issue to implement section 306 (recordkeeping/records access) and section 303 (administrative detention) of the Bioterrorism Act, will help FDA act quickly in responding to a threatened or actual bioterrorist attack on the U.S. food supply or to other food-related emergencies. Registration will provide FDA with information about facilities that manufacture/process, pack, or hold food for consumption in the United States. In the event of an outbreak of foodborne illness, such information will help FDA and other authorities determine the source and cause of the event. In addition, the registration information will enable FDA to notify more quickly the facilities that might be affected by the outbreak. In developing this interim final rule, FDA has complied with its international trade obligations, including the applicable World Trade Organization (WTO) agreements and the North American Free Trade Agreement (NAFTA).

II. Highlights of the Interim Final Rule and Summary of the Significant Changes Made to the Proposed Rule

A. The Highlights of This Interim Final Rule Are Described Briefly Below and Are Discussed in More Detail Later in the Preamble

The highlights of this interim final rule are as follows:

• The owner, operator, or agent in charge of a facility engaged in manufacturing/processing, packing, or holding food for consumption in the United States by humans or animals is responsible for registering the facility with FDA;

• The owner, operator, or agent in charge of a facility that is required to register may authorize an individual to submit the facility's registration to FDA;

• Facilities covered under this rule must be registered by December 12, 2003;

• A foreign facility is exempt from registering if food from the facility undergoes further processing or packaging by another facility outside the United States. The facility is not exempt from registration if the processing or packaging activities of the subsequent facility are limited to affixing a label to a package or other de minimis activity. The facility that conducts the de minimis activity also must register;

• The following domestic and foreign facilities are also exempt from registration: Farms; restaurants and other retail food establishments; nonprofit food facilities that prepare or serve food directly to the consumer or otherwise provide food or meals for consumption by humans or animals in the United States; fishing vessels not engaged in processing as defined in § 123.3(k); and facilities regulated exclusively, throughout the entire facility, by the U.S. Department of Agriculture (USDA) under the Federal Meat Inspection Act (21 U.S.C. 601 *et seq.*), the Poultry Products Inspection Act (21 U.S.C. 451 *et seq.*), or the Egg Products Inspection Act (21 U.S.C. 1031 *et seq.*);

• Registrants must use Form 3537 to register. This form is available either on the Internet (see address below) or via mail or phone request. FDA will begin processing paper registrations on October 16, 2003. Registrants must use Form 3537a to cancel their registration;

• FDA strongly encourages electronic registration, which will be quicker and more convenient for both facilities and FDA than registration by mail or CD–ROM;

• To register electronically, beginning on October 16, 2003, a registrant may visit *http://www.fda.gov/furls,* which is available for registration 24 hours a day, 7 days a week. This Web site is available from wherever the Internet is accessible, including libraries, copy centers, schools, and Internet cafes, as well as through a foreign facility's U.S. agent or other authorized individual if the facility makes such arrangements;

• Regardless of the mode of submission (electronic, paper, or CD–ROM), each registration must include the name and contact information for the facility and its parent company (if applicable); all trade names the facility uses; applicable food product categories as identified in § 170.3 of this chapter; a statement certifying that the information submitted is true and accurate and that the person submitting the registration is authorized by the facility to register on its behalf; and if a foreign facility, the name of and contact information for the facility's U.S. agent. A domestic facility must provide emergency contact information;

• No registration fee is required;

• Updates to registration information or cancellation of registration must be submitted within 60 calendar days of any change to any of the required information previously submitted;

• Failure of a domestic or foreign facility to register, update, or cancel its registration in accordance with this regulation is a prohibited act under section 301(dd) of the FD&C Act;

• The disposition of food imported or offered for import from an unregistered foreign facility will be governed by the procedures set out in subpart I of this part 1 (21 CFR part 1) (Prior Notice of Imported Food); and

• Assignment of a registration number to a facility means that the facility is registered with FDA. Assignment of a registration number does not in any way convey FDA's approval or endorsement of a facility or its products.

B. Significant Changes Made to the Proposed Rule

The significant changes FDA made to the proposed rule are as follows:

• The interim final rule provides that private residences of individuals and nonbottled water drinking water collection and distribution establishments and structures are not facilities and, therefore, are not required to register;

• The interim final rule clarifies that transport vehicles are not facilities if they hold food only in the usual course of business as carriers;

• The definition of farm now states that washing, trimming of outer leaves, and cooling produce are part of harvesting;

• The definition of farm now includes facilities that pack or hold food, provided that all food used in such activities is grown, raised, or consumed on that farm or another farm under the same ownership;

• The definition of food for purposes of the Bioterrorism Act excludes food contact substances as defined in section 409(h)(6) of the FD&C Act (21 U.S.C. 348(h)(6)) and pesticides as defined in the Federal Insecticide, Fungicide, and Rodenticide Act (FIFRA), 7 U.S.C. 136(u);

• Packaging (when used as a verb) has been defined and means ''placing food into the container that directly contacts the food and that the consumer receives;''

• The definition of ''retail food establishment'' has been revised to

an establishment that sells food products directly to consumers as its primary function. A retail establishment may manufacture/process, pack, or hold food if the establishment's primary function is to sell from that establishment food that it manufactures/processes, packs, or holds directly to consumers. A retail food establishment's primary function is to sell food directly to consumers if the annual monetary value of sales of food products directly to the consumers exceeds the annual monetary value of sales of food products to all other buyers. The term 'consumers' does not include businesses. A 'retail food establishment' includes grocery stores, convenience stores, and vending machine locations.

• FDA has added a definition for ''trade name'' as ''the name or names under which the facility conducts business, or additional names by which the facility is known. A trade name is associated with a facility, and a brand name is associated with a product;''

• FDA has determined that it will contact the foreign facility's U.S. agent when an emergency occurs, unless the registration specifies another emergency contact under § 1.233(b);

• FDA is clarifying that having a single U.S. agent for FDA registration purposes does not preclude facilities from having multiple agents (such as foreign suppliers) for other business purposes. A firm's commercial business in the United States need not be conducted through the U.S. agent designated for purposes of registration;

• FDA is allowing registrants to submit their registrations by fax or CD–ROM, which FDA will enter into its registration system, along with the mailed submissions, as soon as practicable, in the order received;

• FDA has changed the timeframe in which registrants must update their registrations from 30 days to within 60 days of any change in the required information;

• FDA has deleted the requirement to update optional information previously submitted, but encourages facilities to do so voluntarily; and

• FDA has clarified that if a facility has a new owner, the former owner must submit a cancellation within 60 calendar days of the change and the new owner must re-register the facility.

• FDA now provides that the failure of an owner, operator, or agent in charge of a facility governed by this interim final rule to register such facility, update required elements of its registration, or cancel its registration, is a prohibited act under section 301(dd) of the FD&C Act (21 U.S.C. 331(dd)).

III. Comments on the Proposed Rule

FDA received approximately 350 submissions in response to the proposed rule, which raised almost 200 major issues. To make it easier to identify comments and FDA's responses to the comments, the word ''Comment'' will appear in parentheses before the description of the comment, and the word ''Response'' will appear in parentheses before FDA's response. FDA has also numbered each comment to make it easier to identify a particular comment. The number assigned to each comment is purely for organizational purposes and does not signify the comment's value or importance or the order in which it was submitted.

A. General Comments

(Comment 1) Most commenters state that they generally support protection of the U.S. food supply under the Bioterrorism Act. Although some commenters assert that the proposed rule should be amended to reflect more accurately industry practices, other commenters believe the regulation should be strengthened to ensure that FDA has all the information required to identify foods that may pose a health or security threat. Other commenters question how the interim final rule would enhance FDA's ability to improve food safety and whether the benefits outweigh the costs.

Some commenters argue that the proposed regulation should either be reproposed or not implemented at all. These commenters claim that the proposed rule is seriously flawed, unduly burdensome, and will unnecessarily interfere with trade. Some of these commenters also argue that FDA already has complete information to allow for identification of, and quick communication with, affected facilities before a shipment is introduced into U.S. commerce.

(Response) In response to the comments regarding reproposing or not implementing the rule, these options are not available to FDA under the Bioterrorism Act, because that act requires FDA to ''promulgate proposed and final regulations for the requirement of registration'' by December 12, 2003. The Bioterrorism Act further states that the registration requirement takes effect on December 12, 2003, even if FDA does not have a final regulation in effect by the deadline. FDA believes that both the proposed rule and this interim final rule properly implement section 305 of the Bioterrorism Act, and thus, there is no need to repropose the regulation. Further, based on the many comments supporting the proposed regulation as well as those comments suggesting limited changes to the rule as proposed, FDA disagrees that the proposed regulation is so flawed that reproposal is required.

FDA is aware that the registration regulation may alter industry practices to some extent. In enacting the Bioterrorism Act, Congress determined that registration with FDA was necessary to respond to bioterrorism and other food-related emergencies. Registration will give FDA information it does not currently have about facilities that manufacture/process, pack, or hold food for consumption in the United States, and current contact information for all of these facilities. FDA will be able to use this information to target its contacts to both domestic and foreign facilities in the event of a bioterrorist threat or other food-related emergency. Information about food product categories will permit FDA to screen food imports more carefully because the agency will be able to match a registrant's food product category with the product code and common or usual or market name submitted as part of a prior notice (21 CFR part 1, subpart I). Registration will also give FDA information that we can use to focus and better utilize the agency's limited inspection resources.

Registering with FDA creates an information trail, which would, even if the information in the registration were falsified, provide evidence that could link the registration to the registrant. By creating this paper trail, persons in the food supply chain who might intentionally contaminate food may be deterred by the creation of additional evidence that might be used against them. Persons who might intentionally contaminate the food supply but refuse to register would be subject to criminal and civil sanctions and would risk having their product, if imported, held at the port.

To alleviate some of the burden registration may impose on industry, FDA has modified some of the elements of registration, including emergency contact information; the definitions for ''farm,'' ''facility,'' and ''retail food establishment,'' and the timing for submitting updates to FDA when required elements in a registration change. These changes will be discussed in the appropriate sections later in this document.

FDA also believes that its electronic registration system will make registration an efficient and straightforward process. FDA has received positive comments from stakeholders who attended FDA's preliminary demonstrations of the electronic prototype registration system.

(Comment 2) Some commenters request that FDA include a provision in the interim final rule that permits the agency to amend the system quickly to respond to flaws in the rule discovered through practice. Some of these commenters state that this arrangement would be especially helpful for countries that are able to reach a more efficient or effective registration arrangement with FDA that reflects actual reductions in risks through such arrangements.

(Response) FDA always has the option to amend its regulations if the agency believes that improvements would serve the public interest, and interested persons may request such modification by following the procedures in 21 CFR 10.30, regarding citizen petitions. The process for any amendment to an existing FDA regulation must conform to the requirements of the Administrative Procedure Act (APA) (5 U.S.C. 551–559). Notably, section 553 of the APA provides a process for issuing a final rule in an expedited timeframe if certain conditions are met. Importantly, however, FDA can only amend the interim final registration rule consistent with the requirements in the Bioterrorism Act.

(Comment 3) FDA received several comments about the need for outreach efforts regarding the registration requirement. Some commenters encourage FDA to facilitate education regarding the new rule and to provide foreign facilities with information necessary to maintain the flow of trade to the United States. Other commenters encourage FDA to develop clear, definitive statements that outline registration requirements in a simple manner. Some commenters ask about the role of States in the outreach strategy. One commenter recommends that FDA reach out to State agencies and the relevant media to ensure that all affected industries are aware of the registration requirement. Finally, some commenters request that FDA establish consultation services staffed with both English and foreign language speakers to answer questions about the registration system and requirements and to give technical assistance to help foreign facilities meet the requirements of the regulation.

(Response) FDA conducted extensive outreach on the proposed registration rule, including having relevant FDA staff attend 6 international meetings and over 100 domestic meetings to ensure that affected parties were aware of the Bioterrorism Act registration requirement. On January 29, 2003, FDA held a public meeting (via satellite downlink) to discuss the registration and prior notice proposed rules. (See 68 FR 1568, January 13, 2003, or *http://www.accessdata.fda.gov/scripts/oc/ohrms/advdisplay.cfm*.) Nearly 1,000 participants in North and South America and the Caribbean viewed that live broadcast. The meeting was later rebroadcast to Europe, Asia, Africa, and the Pacific (areas in different time zones). FDA has also provided transcripts of the broadcast in English, French, and Spanish (the three official WTO languages) on the agency's Web site. In addition to this outreach to the affected industry, FDA has conducted outreach on the proposed rule to States.

FDA plans similar outreach directed to both domestic and international stakeholders following publication of the interim final rules implementing the registration and prior notice provisions of the Bioterrorism Act. Our outreach will include:

- Dissemination of materials to guide affected domestic and international food facilities through the new processes established to implement the registration and prior notice requirements of the Bioterrorism Act;
- A satellite downlink video broadcast and a series of videoconferences to various regions of the world;
- Materials and events for the media;
- Domestic outreach meetings to States and industry;
- International outreach to U.S. trading partners;
- Online assistance to registrants;
- Presentations by FDA officials and exhibits at professional and trade conferences and meetings to inform industry and State and local government representatives of the new regulations and their requirements; and
- Cooperative arrangements with Customs and Border Protection (CBP) and other Federal agencies to ensure that information on the final regulations and their requirements is disseminated to affected companies and individuals.

More specifics regarding each of these will be included on FDA's Web site at *http://www.fda.gov/oc/bioterrorism/bioact.html*.

FDA will notify the WTO of these regulations. In addition, shortly after publication of this interim final rule, FDA will begin disseminating at the U.S. ports of entry flyers and posters summarizing the new requirements and informing representatives of affected facilities how to register and provide prior notice to FDA.

(Comment 4) One commenter suggests that FDA should utilize State resources to cross-reference with its registration database. This commenter suggests that FDA supply States with copies of registration forms that the State inspectors can give to local facilities during routine inspections, but cautions that FDA should supply the forms so as not to deplete State funds.

(Response) FDA agrees with the commenter's suggestion that FDA should use State resources to cross-reference registrations, and will work with States to do so. FDA believes working in cooperation with our State partners will enhance our collective ability to protect the safety of the U.S. food supply, and our ability to work with facilities in the event of an actual or potential threat against a facility or food product. FDA acknowledges the suggestion that the agency should supply States with copies of the FDA registration form for distribution to potential registrants. However, because FDA is trying to encourage as many registrants as possible to register electronically, FDA intends to make paper forms available only through the methods described in this rule. FDA intends to work with States to disseminate information about the Federal registration requirements.

B. Foreign Trade Issues

(Comment 5) Some commenters questioned the consistency of the proposed regulation with U.S. obligations under the NAFTA and various WTO agreements.

(Response) FDA is aware of the international trade obligations of the United States and has considered these obligations throughout the rulemaking process for this regulation. As noted below, FDA believes that these regulations are consistent with these international trade obligations.

(Comment 6) Some commenters asserted that the proposed regulation is burdensome, costly, discriminatory, and will have a negative impact on foreign trade.

(Response) In drafting the interim final rule, FDA structured the rule to be consistent with the statutory mandates of the Bioterrorism Act and, at the same time, to reduce the costs associated with compliance. As discussed in more detail later in the preamble, FDA carefully considered comments received regarding the burden imposed by the proposed rule, including its impact on international trade. The agency has made a number of changes in the interim final rule that are both consistent with FDA's statutory mandate and that will make it easier and less costly for covered facilities (foreign or domestic) to register. In addition, the interim final rule exempts certain establishments from the registration requirement that, under the rule as proposed, would have been required to register. For example:

- FDA has changed the definition of ''food'' for purposes of the Bioterrorism Act to exclude food contact substances as defined in section 409(h)(6) of the FD&C Act and pesticides as defined in FIFRA (7 U.S.C. 136(u)).
- FDA has broadened the definition of ''farm'' to include the activities of harvesting, and the rule considers washing, trimming of outer leaves, and cooling of crops on a farm to be harvesting. Also, in the interim final rule, ''farm'' includes facilities that pack or hold food, provided that all food used in such activities is grown, raised, or consumed on that farm or another farm under the same ownership.
- FDA is clarifying that having a single U.S. agent for FDA registration purposes does not preclude facilities from having multiple agents (such as foreign suppliers) for other business purposes.
- The interim final rule allows registrants to submit their registrations by fax or CD–ROM, which FDA will enter into its registration system, along with the mailed submissions, as soon as practicable, in the order received.
- FDA has extended the timeframe in which registrants must update their registrations from 30 to 60 days of any change in the required information.
- FDA has deleted the requirement to update optional information previously submitted.

C. Comments on Who Must Register Under This Subpart? (Proposed § 1.225)

(Comment 7) Some commenters disputed the statement in the proposed rule that [i]ndividual homes are not subject to the regulation if the food that is manufactured/processed, packed, or held in the home does not enter commerce.'' (68 FR 5378). These commenters argue that under this limited exclusion for homes, individuals, such as Girl Scout and Boy Scout volunteer parents, individuals who prepare food in their homes for functions such as church bake sales, and individuals who temporarily store food in their homes as sales samples or small inventories of product for delivery to rural retailers would be required to register because they often hold in their homes food products destined for further movement through commerce. The commenters argue that the Bioterrorism Act does not mention individual residences in the scope of facilities that manufacture, process, pack, or hold food and asserts that Congress did not intend that the registration requirements compel ordinary citizens to register their residences, and that including residences would not give FDA any useful or actionable information. This commenter concludes that FDA should explicitly exempt individual residences under all circumstances.

(Response) FDA has concluded that private individual residences are not ''facilities'' for purposes of the registration provision of the Bioterrorism Act. Under the Bioterrorism Act, the term ''facility'' includes ''any factory, warehouse, or establishment.'' Congress did not specify any definition for these terms. Under their common meanings, the terms can include private residences. For example, according to Webster's II New Riverside University Dictionary (1994), the most relevant definition of ''establishment'' is ''a business firm, club, institution, or residence, including its possessions and employees.'' However, ''[i]n determining whether Congress has specifically addressed the question at issue, the court should not confine itself to examining a particular statutory provision in isolation * * *. It is a 'fundamental canon of statutory construction that the words of a statute must be read in their context and with a view to their place in the overall statutory scheme.''' *FDA* v. *Brown & Williamson Tobacco Corp.*, 529 U.S. 120, 121 (2000). Other parts of the registration provisions in section 415 of the FD&C Act indicate that Congress only intended businesses to register, and raise a question as to whether Congress intended that private individual residences, even though food is manufactured/processed, packed, or held at such residences, be considered facilities. For instance, a registrant is required to submit ''the name and address of each facility at which, and all trade names under which, the registrant conducts business * * * ''(21 U.S.C. 350d(a)(2)). Thus it is unclear whether Congress intended all individual private residences at which food is manufactured/processed, packed, or held to be included in the term ''facility.'' Furthermore, the requirement that a facility submit its ''name'' as well as its ''trade names'' raises a question as to whether Congress intended ''facility'' to include private individual residences since it is unlikely that a home would have a name or a trade name. Where the words of the statute are ambiguous, an agency may make a reasonable interpretation of the statute. *Chevron, USA, Inc.* v. *NRDC, Inc.*, 467 U.S. 837, 842–843 (1984); *Brown & Williamson*, supra, at 132.

Consistent with the language of section 415(a)(2) discussed previously, the agency concludes that interpreting the term ''facility'' to exclude private individual residences is a reasonable construction for purposes of registration. This interpretation, however, does not necessarily preclude a reasonable construction of other provisions of the FD&C Act to include such residences.

Therefore, in response to these comments, we have revised the interim final rule at 1.227(b) to provide that the definition of facility does not include private residences of individuals. Accordingly, homes that store Girl Scout cookies for distribution, homes in which food is prepared for church bake sales, and homes where individuals temporarily store sales samples or small inventories of products for delivery to rural retailers are not facilities, and therefore, are not subject to registration.

(Comment 8) One commenter requests that FDA clarify whether trans-shippers, who ship products through the United States en route to other countries, are required to register. Another commenter wants FDA to clarify whether it will require registration of foreign facilities that export food to locations outside the mainland United States, such as Hawaii and the Northern Mariana Islands.

(Response) Because the registration requirement only applies to facilities that manufacture/process, pack, or hold food for consumption ''in the United States,'' facilities that manufacture/process, pack, or hold food that is for consumption only in other countries are not required to register. Therefore, manufacturers/processors, packers, or holders of food that is trans-shipped through the United States to other countries for consumption are not required to register. Facilities that export food for consumption in locations that are part of the United States are required to register. Locations are part of the United States if they are

in any State or Territory of the United States, the District of Columbia, or the Commonwealth of Puerto Rico because section 415(b)(2) of the Bioterrorism Act (21 U.S.C. 350d(b)(2)) defines the term ''domestic facility'' to mean a facility in any of the States or Territories. Facilities that manufacture/process, pack, or hold food for consumption in Hawaii and the Northern Mariana Islands are thus required to register because these locations are respectively a State and a Territory of the United States.

(Comment 9) Several commenters responded to FDA's request for comments on whether it has authority to exempt domestic facilities engaged only in intrastate commerce from the registration requirement and if so, whether the agency should use that authority. The commenters agree with FDA's decision in the proposed rule to require facilities engaged in intrastate commerce to register. One commenter states that intrastate facilities should not be excluded because individuals wanting to contaminate the food supply could choose key States from which to launch an attack. This commenter also points out that foreign facilities are not exempt, even if they only import food into one State. Several commenters argue that requiring these foreign facilities to register, while exempting facilities engaged in intrastate commerce, is discrimination against foreign facilities.

(Response) In the preamble to the proposed rule, FDA tentatively concluded that the Bioterrorism Act requires all domestic facilities to register, whether or not they engage in interstate commerce. Accordingly, proposed § 1.225(b) stated that a domestic facility must register (unless otherwise exempt) ''whether or not the food from the facility enters interstate commerce.''

FDA sought comment on whether the agency has authority to exempt domestic facilities engaged only in intrastate commerce from the registration requirement and, if so, whether FDA should use that authority. FDA also asked for comment on the number of so-called ''intrastate'' facilities that would not be covered by one of the exemptions from registration. No one asserted that Congress could not require such facilities to register. Similarly, no one identified intrastate facilities that would not already be covered by one of the exemptions. As noted in the preamble to the proposed rule, FDA believes that most facilities that do not engage directly in interstate commerce would be covered by an exemption in the interim final rule (*e.g.*, residences of private individuals, farms, restaurants, retail food establishments.)

The comments received agreed with FDA's decision in proposed § 1.225 to require all nonexempt facilities to register even if food from the facility does not enter interstate commerce. They agreed with FDA's position that having a central database including all facilities that manufacture/process, pack, or hold food would help achieve the goals of the Bioterrorism Act. Moreover, the commenters gave additional reasons why excluding so-called ''intrastate'' facilities from the registration requirement could be detrimental or inappropriate. Importantly, no comments presented any reason for excluding facilities from the registration requirement solely on the basis of whether the food from the facility enters interstate commerce.

FDA is mindful that its interpretation of the Bioterrorism Act should not cast doubt on the constitutionality of the statute. (*See Solid Waste Agency of Northern Cook County* v. *U.S.,* 531 U.S. 159 (2001)). The agency has considered the relevant provisions of the Bioterrorism Act, the comments submitted on this issue, FDA's responsibilities in implementing the Bioterrorism Act, and the law interpreting the commerce clause of the Constitution (Article I, section 8). Based on these considerations, FDA is retaining § 1.225(b) as proposed, with the result that all facilities that manufacture/process, pack, or hold food (unless otherwise exempt) must register even if food from the facility does not enter interstate commerce.

Significantly, the plain language of new section 415 of the FD&C Act does not exclude a facility from registration because food from such facility does not enter interstate commerce. Notably, sections 301 and 304 of the FD&C Act (21 U.S.C 334) demonstrate that Congress has included a specific interstate commerce nexus in the provisions of the FD&C Act when that is its intent. Accordingly, it is reasonable to interpret the Bioterrorism Act as not limiting registration only to those facilities with a direct connection to interstate commerce. Congress's power to legislate under the commerce clause is very broad. However, such power is not without limits, *see United States* v. *Lopez,* 514 U.S. 549, 567 (1995); *U.S.* v. *Morrison,* 529 U.S. 598, 618 (2000), and these limits have been construed in light of relevant and enduring precedents.

In particular, in *Lopez, supra,* the Supreme Court acknowledged the continuing vitality of *Wickard* v. *Filburn,* 317 U.S. 111 (1942), noting that ''although Filburn's own contribution to the demand for wheat may have been trivial by itself, that was not 'enough to remove him from the scope of federal regulation where, as here, his contribution, taken together with that of many others similarly situated, is far from trivial.' '' (514 U.S. at 556.) This principle applies squarely to the registration provision of the Bioterrorism Act. Accordingly, given the collective impact on commerce of so-called ''intrastate'' facilities that manufacture/process, pack, or hold food, FDA has concluded that each such facility should be required to register regardless of whether food from that facility enters interstate commerce. Thus, FDA is retaining § 1.225(b) as proposed.

This outcome is consistent with section 709 of the FD&C Act (21 U.S.C 379a), which states that in any action to enforce the act's requirements respecting foods, drugs, devices, and cosmetics, any necessary connection with interstate commerce is presumed. Likewise, this outcome is consistent with Congress's goal in enacting the Bioterrorism Act because the potential harm from bioterrorist attacks or other food emergencies can be great, whether or not the food moves from one state to another. The usefulness of the registration database can also be significant in food emergencies where interstate shipment has not occurred. Finally, as noted, FDA received no comments identifying so-called ''intrastate'' facilities that would not otherwise be exempt from registration. Thus, this outcome, as a practical matter, should have little if any impact on which facilities must register. Accordingly, FDA concludes that it is appropriate to require facilities that do not fall within an exemption to register regardless of whether the food from the facility enters interstate commerce.

(Comment 10) One commenter states that the proposed rule requires all foreign and domestic facilities with operations that have an effect or impact on food to register unless subject to specific exemptions. The commenter believes that this is vague and not specific for imported shipments, especially fresh produce, and would require all parties having any contact with the produce to register. This commenter also argues that the party registering with FDA for produce shipments should be the exporter.

(Response) The commenter misunderstands the proposed rule. First, the statement that the rule would require registration by all facilities that ''have an effect on food'' is not accurate. As stated previously, both the

Bioterrorism Act and this interim final rule (which is consistent with the proposed rule) provide that a facility must be registered if it is engaged in manufacturing/processing, packing, or holding food for consumption in the United States. Second, both the Bioterrorism Act and the interim final rule (as did the proposal) provide that foreign facilities are exempt from registration if food from these facilities undergoes further manufacturing/processing (including packaging) by another foreign facility outside the United States. Finally, because the registration requirement is facility-based, an exporter is required to register only if it is the owner, operator, or agent in charge of a facility that manufactures/processes, packs, or holds food for consumption in the United States, and the facility is not subject to any of the listed exemptions. This is consistent with the specific language in the Bioterrorism Act.

(Comment 11) One commenter asks FDA to clarify whether registration applies to ''bulk grain handling facilities which exist for the purpose of export and domestic shipments.''

(Response) It is not clear from the comment what activities the bulk grain handling facility conducts. If ''bulk grain handling'' means storing grain in bulk, the facility is required to register with FDA if the grain will be consumed by humans or animals in the United States, because the facility is engaged in ''holding'' food. Similarly, if ''bulk grain handling'' is synonymous with the activities of a feedmill, the facility is required to register with FDA because feed mills manufacture/process, pack, and hold feed for animal consumption. The discussion under the definition of ''retail food establishment'' provides further clarification.

(Comment 12) One commenter has several questions related to who is required to register: Is the registration requirement limited strictly to commercial shipments? How does registration affect United States travelers who bring varying quantities of goods into the United States?

(Response) The registration requirement applies to facilities that manufacture/process, pack, or hold food for consumption in the United States. Thus the requirement is tied to: (1) Facilities, and (2) food that will be consumed in the United States. The Bioterrorism Act, therefore, does not limit the registration requirement to commercial shipments. However, travelers who bring foods into the United States on their person or in their baggage are not facilities under this rule, and thus, they are not required to register. FDA notes that travelers may nevertheless be subject to prior notice if they are carrying or otherwise are accompanied by food that is not for personal use (*i.e.*, for consumption by themselves, family, or friends, and not for sale to anyone.)

(Comment 13) A commenter asks what is the responsibility of foreign governments owning facilities that hold food? Also, what is the responsibility of a country through whom goods of concern may be trans-shipped?

(Response) The registration requirement applies to facilities that manufacture/process, pack, or hold food for consumption in the United States. Thus the requirement is tied to: (1) Facilities, and (2) food that will be consumed in the United States. There is no exemption in the Bioterrorism Act or this interim final rule for facilities that manufacture/process, pack, or hold food that happen to be government-owned. Accordingly, such government-owned facilities are required to register if they meet the other requirements of registration.

A country through which foods may be trans-shipped on their way to the United States has no responsibility regarding registration, as the registration requirement applies to facilities that manufacture/process, pack, or hold food. Under the Bioterrorism Act, the responsibility to register is on the owner, operator, or agent in charge of a facility that manufactures/processes, packs, or holds food for consumption by humans or animals in the United States.

(Comment 14) A commenter primarily engaged in exporting products from the United States asks FDA to clarify whether such an exporter is required to register if the foreign country or foreign buyer rejects food being exported from the United States, and the food is returned to the United States.

(Response) Where food exported from the United States is rejected and returned to this country, the owner, operator, or agent of any facility that manufactures/processes, packs, or holds the food is required to register if the food will be consumed in the United States. FDA is assuming in comment 14 that no foreign facility other than the exporting facility manufactures/processes, packs, or holds the food before it is returned to the United States.

(Comment 15) One commenter asks FDA to clarify whether domestic grain handling, and feed manufacturing facilities engaged solely in exporting bulk or processed agricultural commodities to other countries are exempt from the registration requirement.

(Response) A facility is only required to register with FDA if the food manufactured/processed, packed, or held in the facility is for consumption or is actually consumed in the United States by humans or animals.

(Comment 16) One commenter asks ''[w]hat happens if [an] exporter cannot get [the foreign] manufacturer to register, and does not have all of the necessary information to do it himself?'' The commenter asks whether the exporter ''will not be permitted to send the shipment resulting in lost sales to his company.''

(Response) The response to comment 17 addresses which foreign facilities are required to register with FDA. If the manufacturer/processor in the above scenario (or a packer or holder) is required to register but fails to do so, the Bioterrorism Act provides that food shall be held at the U.S. port of arrival or in a secure facility until the facility registers (21 U.S.C. 381(l)). However, the provisions of the prior notice interim final rule (which is published elsewhere in this issue of the **Federal Register**) that address product under hold provide for export of such products.

FDA has made some editorial changes in this section for the purpose of clarity.

D. Comments on ''Who is Exempt From This Subpart?'' (Proposed § 1.226)

In the interim final rule, the title of this section has been changed to ''Who does not have to register under this subpart?''

1. Foreign Facilities

(Comment 17) A commenter asks which foreign facilities would be required to register in the case of raw agricultural commodities, such as cocoa beans, which may be dried, (in some cases) fermented, blended with beans from other farms, packed into bags, fumigated, weighed, graded, and stored in one or more warehouses before being exported to the United States.

(Response) The Bioterrorism Act states that a foreign facility must register if food from such a facility is exported to the United States for consumption in this country ''without further processing or packaging outside the U.S.'' Therefore, a foreign facility is only required to register if it manufactures/processes the food without further manufacturing/processing of the food by another foreign facility prior to export to the United States. The foreign facility is required to register even if there is a subsequent facility that further manufactures/processes the food if the activities of the subsequent facility are merely of a *de minimis* nature. A foreign facility must also register if, prior to

export to the United States, it packs or holds food after the last foreign manufacturer/processor of the food. Under these provisions, the last facility that manufactures/processes the cocoa beans, and every facility that subsequently engages in packing or holding the beans, as well as any facility that subsequently engages in *de minimis* manufacturing/processing (such as labeling) of the cocoa beans, is required to register.

(Comment 18) Several commenters argue that registration of foreign facilities should be limited to the last holder of the goods, since it would be difficult for many facilities further up the distribution chain to find a U.S. agent.

(Response) FDA is denying this request due to the registration requirement provided in the Bioterrorism Act for foreign facilities that manufacture/process, pack, or hold food. See the response to comment 17 for these specific requirements.

(Comment 19) A commenter requests clarification on whether registration applies to foreign port facilities such as warehouses or storage and inspection facilities belonging to private companies. Another commenter asks whether brokers, warehousers, or traders who take possession of food before it is exported to the United States need to register.

(Response) As noted, the registration requirement of the Bioterrorism Act is facility-based and has no exemption from registration for port storage and inspection facilities if these facilities are used to hold food. Therefore, foreign port storage and inspection facilities must be registered with FDA if they manufacture/process, pack, or hold food for consumption in the United States. Similarly, a broker, warehouser, or trader who takes possession of food before it is exported to the United States is required to register if the broker, warehouser, or trader is the owner, operator, or agent in charge of a facility that manufactures/processes, packs, or holds food for consumption in the United States.

(Comment 20) One commenter states that all foreign processors, holders, and manufacturers throughout the foreign distribution chain should be required to register.

(Response) FDA is denying this request due to the registration requirement provided in the Bioterrorism Act for foreign facilities that manufacture/process, pack, or hold food. See the response to comment 17 for these specific requirements.

(Comment 21) One commenter states that, in its application to foreign facilities, FDA should revise its definition of ''holding'' to ''provid[ing] storage of food products and neither engag[ing] in the manufacturing nor processing of the food products, except for incidental services that do not involve unsealing of the primary food container.''

(Response) FDA declines to change ''holding'' to include ''incidental services that do not involve unsealing of the primary food container.'' This change would blur the distinction between manufacturing/processing and holding because activities that do not involve unsealing of a food container could be considered *de minimis* processing, as opposed to holding. See the response to comment 17 for specific registration requirements for foreign facilities.

(Comment 22) Some commenters involved in the production of food that either has a long shelf life or long production phase ask whether they are required to register with FDA if they do not know the eventual export destination at the time of production. For example, for vintage wine, the eventual destination of the wine (*i.e.*, whether the wine is for consumption in the United States) is generally not known at the time of production. Other commenters state that for similar reasons, registration should not be required of foreign ''collection points,'' which receive products from a large number of suppliers, then distribute or sell them at auctions.

(Response) Under this interim final rule, an owner, operator, or agent in charge must register its facility only if the food manufactured/processed, packed, or held at the facility is for consumption in the United States. In the response to comment 17, FDA has clarified the registration requirements for foreign facilities that manufacture/process, pack, and hold food. That discussion is also relevant to this comment. Although the destination of some food produced abroad is not known at the time of its production, FDA believes that producers and distributors of these products are likely to have an idea of the eventual destination, based on prior sales and promotional activities. Because the Bioterrorism Act generally prohibits food from an unregistered foreign facility from being delivered for distribution in the United States until the facility is registered, FDA recommends that the owners, operators, or agents in charge of facilities producing these types of food register their facilities if they reasonably believe their foods may be consumed in the United States.

(Comment 23) One commenter states that, for commercial confidentiality reasons, foreign traders may not wish to reveal the identity of the packer or producer to the importer, and that the registration requirement would interfere with this confidentiality.

(Response) FDA acknowledges that for some entities, the registration requirements may result in some alterations of their past business practices. However, the Bioterrorism Act imposes certain requirements on the importation of food for consumption in the United States, including registration of foreign and domestic food facilities. It is incumbent on these facilities to make the necessary arrangements to comply with the Bioterrorism Act if they wish to continue to import food into the United States.

(Comment 24) Some commenters request that foreign facilities should be exempt if they export food solely to their own subsidiaries in the United States. These commenters state that these foreign facilities send finished or semifinished goods or raw materials to their subsidiaries in the United States for further processing. The commenters argue that, under these circumstances, the foreign parent company should not have to register; however, under the proposed rule, not only the final processor, but also all of its suppliers, would be required to register.

(Response) FDA is denying this request because the Bioterrorism Act does not authorize an exemption from registration for facilities that export solely to their subsidiaries in the United States. Moreover, it appears that the commenter misunderstands the requirements that apply to foreign facilities. Under both the proposed rule and this interim final rule, suppliers of food need not register if another foreign facility subsequently manufactures/processes the food before it is exported to the United States, unless the subsequent facility is conducting *de minimis* activities, such as labeling. In the latter situation, both facilities would have to register.

(Comment 25) Several commenters request further clarification regarding the ''*de minimis*'' provision. Some commenters request that FDA exempt foreign facilities engaging in *de minimis* activity. In fact, one commenter mistakenly states that the proposed rule exempts foreign facilities if a facility subsequent to them conducts *de minimis* activity.

(Response) Please see the response to comment 17 regarding the registration requirements as applied to foreign manufacturers/processors. An exemption for foreign facilities engaged

in *de minimis* manufacturing/processing would be inconsistent with the Bioterrorism Act language quoted in the response to comment 17.

(Comment 26) One commenter requests that FDA provide either a definition of ''*de minimis*'' or more examples of what constitutes *de minimis* activity, such as blending, sieving, particle size distribution, drying crops, and repackaging.

(Response) FDA has concluded that *de minimis* manufacturing/processing does not involve direct manipulation of food. Therefore, most of the activities included in the comment (blending, sieving, particle size distribution, and drying crops) are not *de minimis* because they manipulate food. Regarding ''re-packaging,'' it is not clear whether this activity would contact the food itself or merely involve contact with outer materials that do not contact the food. If the re-packaging involves contact with the food itself, it would not be considered *de minimis*.

2. Farms

FDA did not receive any comments on ''farm'' as an exemption. Please see section III.E.6 of this document for changes FDA made to the definition of ''farm.'' FDA also addresses the comments we received on farms in section III.E.6 of this document.

3. Retail Facilities

FDA did not receive any comments on ''retail facilities'' as an exemption. In this interim final rule, we have changed the term ''retail facility'' to ''retail food establishment'' to be consistent with the statutory term. Please see section III.E.14 of this document for changes FDA made to the definition of ''retail food establishment.'' FDA also addresses the comments we received on retail food establishments in III.E.14 of this document.

4. Restaurants

Please see the definitions section III.E.13 of this document for changes FDA made to the definition of ''restaurant.'' FDA also addresses all but one of the comments we received on the ''restaurant'' exemption in section III.E.13 of this document.

(Comment 27) FDA did receive one comment specifically addressing the restaurant exemption. This comment states that although the proposed rule provides that restaurants are exempt from registration, it ''continues to define when it is necessary for food facilities to register and provides an opportunity for the foreign facilities to designate a U.S. agent for registration. This language alone contradicts the exemption in many circumstances within the restaurant industry. The intention of Congress was to exempt restaurants * * * language must be incorporated to state that foreign facilities should not have the ability to designate a U.S. agent for registration.'' This commenter also urges FDA to incorporate language in the interim final rule clearly stating that foreign facilities may designate a restaurant as a U.S. agent, while emphasizing that this designation does not remove the restaurant exemption from all restaurants.

(Response) FDA is not certain it understands this comment. This commenter appears to be concerned that the restaurant exemption would conflict with the U.S. agent requirement, if a foreign facility were to choose a domestic restaurant as its U.S. agent. FDA agrees that even if a foreign facility designates a domestic restaurant as its U.S. agent, the restaurant is still exempt from registration itself. In such circumstances, the restaurant can also be authorized by the owner, operator, or agent in charge of the foreign facility to register that facility. Regarding incorporation of language specifying that restaurants can be U.S. agents in the interim final rule, FDA believes that this change is not necessary because the interim final rule states that a U.S. agent is ''a person (as defined in section 201(e) of the act (21 U.S.C. 321(e))).'' This definition includes a restaurant.

5. Nonprofit Food Facilities

In this interim final rule, FDA has changed the term ''nonprofit food facility'' to ''nonprofit food establishment'' to be consistent with the statutory term.

(Comment 28) One commenter asks FDA to confirm that the commenter's affiliates and their agencies are exempt as nonprofit food facilities. This commenter states that all of its food banks, food rescue organizations, and local agencies of its affiliates are required to be incorporated as nonprofit organizations that are exempt from paying income tax as defined by the U.S. Internal Revenue Code Section 501(c)(3) or ''the equivalent.'' The commenter states that its certified affiliate food banks and food rescue organizations provide food to the public through direct distributions and through distributions to local nonprofit section 501(c)(3), or equivalent nonprofit, agencies.

(Response) The interim final rule defines a ''nonprofit food establishment'' as ''a charitable entity that prepares or serves food directly to the consumer or otherwise provides food or meals for consumption by humans or animals in the U.S.'' The interim final rule includes central food banks, soup kitchens, and nonprofit food delivery services as examples of nonprofit food establishments. In response to the comment, FDA is clarifying that to be considered a nonprofit food establishment, the establishment must meet the terms of section 501(c)(3) of the U.S. Internal Revenue Code (26 U.S.C. 501(c)(3)). If the commenter's establishments meet all aspects of the definition of nonprofit food establishment in this interim final rule, they would be exempt from registration.

Please see section III.E.10 of this document for changes FDA made to the definition of ''nonprofit food establishment.''

6. Fishing Vessels

(Comment 29) One commenter states that the fishing vessel exemption will not achieve its intended purpose, due to the Bioterrorism Act's reference to § 123.3(k), which FDA includes in the fishing vessel exemption. The commenter argues that incorporating the reference to § 123.3(k) into the proposed rule invalidates nearly the entire exemption, because harvested fish must be removed from the harvest vessel for any further processing. The exemption, therefore, would only exempt those fishing vessels that transfer harvested fish by brailing or pumping to offshore processing vessels. The exemption would not apply to fishing vessels that enter port and offload fish dockside. As a result of these restrictions on the exemption, the commenter requests that FDA ''acknowledge the irony of this exemption'' and consider requesting a technical amendment to the Bioterrorism Act to broaden the exemption.

(Response) The Bioterrorism Act (21 U.S.C. 350d(b)(1)) expressly references the Seafood Hazard Analysis Critical Control Point (Seafood HACCP) regulations (§ 123.3(k)) as part of the fishing vessel exemption. Accordingly, to the extent that the exemption for fishing vessels is limited, it is limited by Congress. Importantly, however, FDA notes that ''dockside unloading'' is included in the definition of ''processing'' (§ 123.3(k)) to cover waterfront facilities that unload vessels and pack the catch for shipment to buyers, not the vessels from which the catch is unloaded. (See 60 FR 65096, 65114 to 65115, December 18, 1995.) Thus, the comment is not correct that the only vessels that would be exempt are those that transfer fish by brailing or pumping to offshore processing vessels. Generally, vessels covered by the

Seafood HACCP regulations are required to register with FDA.

FDA is using the term ''fish'' to describe the cargo of fishing vessels in order to be consistent with the use of the term in 21 CFR Part 123. ''Fish'' is defined in § 123.3(d) as ''fresh or saltwater finfish, crustaceans, other forms of aquatic animal life (including, but not limited, to alligator, frog, aquatic turtle, jellyfish, sea cucumber, and sea urchin and the roe of such animals) other than birds or mammals, and all mollusks, where such animal life is intended for human consumption.''

(Comment 30) A commenter asks FDA to clarify whether any facilities would be required to register in the following scenario: Company A purchases fish from a Mexican fisherman, loads it onto refrigerated trucks, and transports it to Company B, which is located in the United States.

(Response) Under the interim final rule, fishing vessels are exempt from registration unless processing is done on board the ship. For purposes of this exemption, ''processing ''is defined in § 123.3(k)(1) as ''[h]andling, storing, preparing, heading, eviscerating, shucking, freezing, changing into different market forms, manufacturing, preserving, packing, labeling, dockside unloading, or holding.'' Importantly, however, according to § 123.3(k)(2), harvesting and transport vessels that engage in ''[h]arvesting or transporting fish or fishery products, without otherwise engaging in processing,'' or ''[p]ractices such as heading, eviscerating, or freezing, intended solely to prepare a fish for holding on board a harvest vessel,'' are exempt from registration under 21 CFR 1.126(f). Under the scenario described in the comment, the Mexican fisherman would have to register the vessel if he catches fish and processes it aboard the vessel under § 123.3(k). If the fisherman does not process the fish (other than heading, eviscerating, or freezing the fish to prepare it for holding on board his vessel), the vessel would not need to register. Whether Company A or Company B would be required to register depends upon their activities. If either company engages in manufacturing/processing, packing, or holding the fish, all facilities at which such activities occur must be registered (unless a facility qualifies for one of the exemptions from registration, *e.g.*, a restaurant). A transportation vehicle is not a facility and would not need to register if it holds the fish only in its usual course of business as a carrier (§ 1.226(f).)

7. Facilities Regulated Exclusively, Throughout the Entire Facility, by USDA

(Comment 31) Several commenters ask FDA to clarify which facilities are regulated exclusively by USDA, as USDA versus FDA jurisdiction is not clear to foreign facilities.

(Response) Whether a facility is regulated exclusively by USDA (and thus, is exempt from registration, 21 CFR 1.226(g)) depends upon the products manufactured/processed, packed, or held at the facility. Any facility that manufactures/processes, packs, or holds some foods subject to FDA jurisdiction does not satisfy the exclusivity part of the exemption in § 1.226(g) and thus, must register with FDA.

More specifically, under the Meat Inspection Act (MIA) (21 U.S.C. 601 *et seq.*) and the Poultry Products Inspection Act (PPIA) (21 U.S.C. 451 *et seq.*), USDA inspects facilities that slaughter poultry, cattle, sheep, swine, equines, or goats and facilities that process ''poultry products'' or ''meat food products'' as defined under the MIA and the PPIA (21 U.S.C. 453(f), 455, 601(j), 603). Any USDA-inspected facility that slaughters only poultry, cattle, sheep, swine, equines, or goats is solely under USDA jurisdiction and is exempt from registration. Facilities that slaughter these animals, but that also slaughter other animals, such as deer or elk, are under both USDA and FDA jurisdiction and must register. Facilities that manufacture/process only ''poultry products'' or ''meat food products,'' as defined by USDA, are exempt from registration. Facilities that manufacture/process ''meat food products,'' such as pizzas with meat topping, and other products, such as cheese pizzas, are under both FDA and USDA jurisdiction and must therefore register with FDA.

Under the Egg Products Inspection Act (21 U.S.C. 1031 *et seq.*), USDA inspects facilities that process ''egg products,'' which are ''any dried, frozen, or liquid eggs, with or without added ingredients, excepting products which contain eggs only in a relatively small proportion or historically have not been * * * considered by consumers as products of the egg food industry * * * '' (21 U.S.C. 1033(ff)). A facility is regulated exclusively by USDA if it manufactures/processes only ''egg products.'' If a facility manufactures/processes other food in addition to, or instead of, egg products, the facility is not regulated exclusively, throughout the entire facility, by USDA and it must be registered. Thus, a facility is regulated exclusively, throughout the entire facility, by USDA if it manufactures/processes, packs, or holds only ''meat food products,'' ''poultry products,'' or ''egg products'' as defined above. If a facility manufactures/processes, packs, or holds other food in addition to meat food products, poultry products, or egg products, the facility is not regulated exclusively, throughout the entire facility, by USDA and thus, would not be exempt from registration.

(Comment 32) One commenter requests FDA to expand this exemption by including all facilities that are subject to USDA jurisdiction, even if they are also subject to FDA jurisdiction. Another commenter asks why, under this exemption, FDA exempts such a considerable part of the production chain from the registration requirements, while also establishing strict requirements for other facilities.

(Response) The Bioterrorism Act requires that, unless exempt, all facilities that manufacture, process, pack, or hold food for consumption in the United States must register (21 U.S.C. 350d(a)). However, section 315 of the Bioterrorism Act states that no part of Title III should be construed to alter the jurisdiction between USDA and FDA. Under current practice, FDA may have jurisdiction over a food facility, USDA's Food Safety and Inspection Service may have jurisdiction over a food facility, or the two agencies may have joint jurisdiction over a food facility. Under section 315, the Bioterrorism Act does not change this structure. Accordingly, only those facilities that manufacture/process, pack, or hold food that is regulated exclusively by USDA is exempt from registration under section 315. In response to the comment asking why FDA exempts such a considerable part of the production chain from registration under this exemption, the authority in the Bioterrorism Act only extends to facilities manufacturing/processing, packing, or holding food under FDA's jurisdiction. Congress did not extend these requirements to facilities under USDA's exclusive jurisdiction. (USDA has other existing authority over facilities under their jurisdiction.) Moreover, even though a facility is exempt from registration with FDA this does not mean that it is exempt from all statutes and regulations that protect the safety and security of food consumed in the United States.

(Comment 33) Several commenters urge FDA to exempt from the registration requirement other facilities in addition to those exclusively regulated by USDA, such as USDA-approved, federally licensed grain storage silos and elevators, low acid

canned food, aquatic products, and fruit exporting enterprises. One of these commenters states that under the Warehouse Act, USDA performs regular, unscheduled inspections of these grain storage facilities; therefore, USDA, not FDA, is the most appropriate federal agency to respond to threats affecting these facilities. The other commenter states that fruit exporters have already registered with USDA.

(Response) FDA believes that this interim final rule implements the intent of Congress as expressed in the Bioterrorism Act. The statute does not include exemptions from the registration requirement for the types of facilities listed in the comment, and the comment identifies no other basis for the exemptions proposed.

E. Comments on ''What Definitions Apply to This Subpart?'' (Proposed § 1.227)

1. The Act

There were no comments on this issue.

2. Calendar Day

There were no comments on this issue.

3. Facility

(Comment 34) Several commenters recommend exempting temporary storage units, public storage facilities, and bulk storage facilities from the definitions of ''facility'' and ''holding,'' because many of these storage facilities are not staffed, so it would be very difficult for FDA to get in touch with these facilities in the event of a bioterrorist attack or other food-related emergency. In addition, the commenters state that many of these holding facilities only hold goods for several hours; therefore, the contents of the facility are continually changing and would require constant updates.

(Response) The interim final rule maintains the definition of facility as proposed although FDA has clarified that ''facility'' does not include a transporter that holds food only in the usual course of its business as a carrier, private residences of individuals, and nonbottled drinking water collection and distribution establishments and their structures. The Bioterrorism Act does not exempt facilities based on the period of time during which they hold food. In terms of contacting facilities that are not staffed, the interim final rule requires facilities to provide an emergency contact who is accessible 24 hours/day, 7 days/week. (For foreign facilities, FDA will consider the U.S. agent the emergency contact, unless the facility designates someone else, as provided in § 1.227(b)(13) and § 1.233(e).) This person does not have to be located at the facility, but does need to be accessible to FDA in case of an emergency.

(Comment 35) One commenter cites case law to argue that FDA has authority to provide for an additional *de minimis* exemption because the burdens of regulating very small facilities will yield trivial or no value. The commenters suggest that FDA change the definition of facility to exempt these storage buildings.

(Response) The Bioterrorism Act does not exempt facilities based on their size. Furthermore, many storage facilities, including temporary storage facilities, may be a target of terrorist attack. Therefore, having the registration information for these facilities can facilitate FDA's response to such an attack.

(Comment 36) Several commenters state that the proposed rule is not clear as to whether transport vehicles hauling food are ''mobile facilities.'' These commenters argue that vehicles used to hold food such as rail cars, tanker trucks, river barges, refrigerated/freezer spaces on ships, truck terminals, marine terminals, and freight forwarders should be exempt from registration. One commenter asserted that the intent of the ''holding'' definition is to ''capture those facilities which hold large quantities of food items for extended periods of time, pending some other action such as movement to a subsequent facility for processing,'' and states that products being held are ''deliberately held under physical control, *i.e.*, restrained from movement.'' In contrast, ''transportation of food items means deliberate movement of those items, under specific arrangements as defined in a bill of lading covering the movement, which would delineate the shipper, consignee, date of movement, details of the shipment, liability for freight charges, and many other elements of transportation.'' The commenter asserts that based on this distinction, transportation providers who are engaged in the movement of goods from a shipper to a consignee, should be exempt from registration.

(Response) FDA has clarified in § 1.227(b)(2) of the interim final rule that a ''mobile facility'' means a mobile manufacturer/processor, packer, or holder. In addition, the interim final rule provides that a vehicle used to transport food is exempt from registration unless it manufactures/processes, packs, or holds the food beyond the usual course of its business as a carrier. This is consistent with the legislative history of the Bioterrorism Act, which states that ''facility'' does not include trucks or other motor carriers, by reason of their receipt, carriage, holding, or delivery of food in the usual course of business as carriers (H.R. Conf. Rep. No. 481, 107th Cong., 2d Sess., 134 (2002)). However, stationary facilities that serve to assist transporters, such as truck or marine terminals or freight forwarders, are required to register because they hold food. If a railcar is used as a grain storage bin for a manufacturing plant, it would be akin to a silo, and as such, the railcar would be ''holding'' food, not transporting it. Thus, the railcar would be a facility that must be registered. As indicated in comment 36, the Bioterrorism Act does not exempt facilities based on how long they hold food.

(Comment 37) One commenter asks whether trucker-dealers, who purchase and take title to grain from producers, and hold the grain in a transportation conveyance until it can be sold to another processor, storage facility, or end user, are mobile facilities.

(Response) Based on the comment, FDA believes that trucker-dealers are mobile facilities, because they are holding grain in a transportation conveyance beyond the usual course of business as carriers.

(Comment 38) Several commenters state that requiring registration of mobile facilities that manufacture/process food is impractical for fishing vessels that process fish. These commenters state that these vessels have a home port designation but no fixed or permanent address; therefore, they would be required to continually update their registrations based on where the vessel was located in the ocean.

(Response) Registration requires a facility to provide sufficient information to enable FDA to contact the facility if FDA receives information about a bioterrorist threat or other food-related emergency, as well as for routine communications. FDA understands that a mobile facility does not have a fixed address. However, the Bioterrorism Act provides that the owner, operator, or agent in charge of a facility must register the facility; therefore, for mobile facilities such as vessels, the owner or operator of the facility usually has a fixed address and may include that fixed address on the registration.

(Comment 39) Several commenters request that FDA change the proposed definition of facility from being in ''one physical location'' to allow registration to be by firm, instead of by facility.

(Response) The Bioterrorism Act (21 U.S.C. 350d(a)(1)) requires that each domestic and foreign facility be registered. ''Facility'' is defined as ''any factory, warehouse, or establishment (including a factory, warehouse, or establishment of an importer) that manufactures, processes, packs, or holds food'' (21 U.S.C. 350d(b)(1)). Thus, the plain language of the Bioterrorism Act requires registration to be by individual facility, not by firm. As noted below, FDA will allow a parent company to register all of its facilities; however, each facility must be registered separately and each will receive a separate registration number.

(Comment 40) Some commenters state that FDA should provide a more flexible definition of facility, thereby allowing companies to decide how many buildings to consider a single facility. Some of these commenters question whether two structures under single ownership with different addresses that are physically next to each other, across the street from each other, or around the block from each other, are considered one or two facilities. Other commenters argue that a company may conduct business at more than one address, but may consider all of the locations as part of one operation. For example, an operation could include offsite storage buildings, water pipelines from one area to another, pump-houses, and bulk processing in one location, with finished processing or packaging at another address.

(Response) The Bioterrorism Act (21 U.S.C. 350d(a)(4)) requires that FDA compile and maintain an up-to-date list of registered facilities; this list will serve two purposes. One purpose of the registration database is to provide FDA with information that will permit FDA to respond promptly to a bioterrorist event or other food safety emergency. A second purpose is to provide the agency with a list of facilities for inspection. Because both the agency's emergency response and its inspections are facility specific, it is important for FDA to have particular information about facility location. This need will not be met if a business with multiple locations is registered as a single facility. FDA suggests that one factor for determining whether a business is one or two facilities is through real estate records, because a property line could demonstrate that several buildings are on the same lot, and therefore, are the same facility.

4. Domestic Facility

FDA received no comments on this definition.

5. Foreign Facility

FDA received no comments on this definition.

6. Farm

(Comment 41) Some commenters state that the proposed definition of farm is unduly narrow because it does not exempt farms that engage in activities traditionally performed on farms for nearly all commodities, including farms that cut, trim, wash, grade, mill, wax, size, cool, apply inventory control items (*e.g.*, universal product codes), treat against pests, transport from the fields, transport to storage or processing facilities, mist, treat with water/ice during storage, package, mill, grind, box/wrap for the sole purpose of transport off the farm, and transport from the farm. Some commenters also ask FDA to clarify whether placing produce into netting or bags for retail sale before placing them in cartons is considered ''packing.''

(Response) In response to these comments and to ensure that FDA is fulfilling Congress's intent to exempt ''farms,'' FDA has revised the definition of farm in the interim final rule (21 CFR 1.227(c)(3)) to state that a farm is a facility in one general location that is devoted to the growing and harvesting of crops, the raising of animals (including seafood), or both, and that washing, trimming outer leaves, and cooling of food are considered part of harvesting. FDA considers several of the activities identified in the comment to be ''packing or holding,'' including sorting, grading, wrapping, or boxing harvested food for the sole purpose of transporting this food off the farm. A farm that performs these activities will not necessarily cease to be a farm and exempt from registration because the definition of farm includes facilities that pack or hold food, provided all food used in such activities is grown, raised, or consumed on that farm or another farm under the same ownership (21 CFR 1.227(c)(3)(i)). Similarly, FDA considers several of the activities identified in the comment (waxing, milling, grinding, and treating against pests) to be manufacturing/processing. A farm that performs these activities will not necessarily cease to be a farm and exempt from registration because the definition of farm includes facilities that manufacture/process food, provided that all food used in these activities is consumed on that farm or another farm under the same ownership (21 CFR 1.227(c)(3)(ii)). Finally, a farm that transports its products does not cease to be a ''farm'' within the meaning of 21 CFR 1.227(c)(3) because, as noted earlier in this document, a transport vehicle is not a ''facility'' for purposes of this rule if it holds food only in the usual course of its business as a carrier and thus, is not required to register.

(Comment 42) Some commenters request that FDA extend the farm definition to public lands used by harvesters or collectors of wild products, including botanicals. The commenters state that these collectors do not manufacture/process or pack foods, and they hold foods similar to many farms.

(Response) FDA does not believe that this comment requires a change in the farm definition. When wild botanicals are grown and harvested on public land, FDA would consider that location to meet the definition of ''farm.'' However, if those harvesting on public land engage in any activity that takes them outside the ''farm'' definition, they must register the facilities where they conduct these activities.

(Comment 43) Some commenters note that some farming operations are spread out over several locations within several miles or more of each other and all of these locations are under the same ownership and management. Accordingly, these commenters request that FDA change the farm definition to cover several different locations. Another commenter asks whether two facilities separated by fencing, a wooded area, a body of water, or a road are one or two farms. Other commenters request that FDA amend the farm definition to include the term ''contiguous,'' which appears in the preamble to the proposed rule but not the definition itself.

(Response) FDA does not believe that these comments require a modification of the definition of farm. Each of these establishments, whether considered one farm or many farms, is exempt if it meets the definition of farm. Additionally, the interim final rule provides that establishments that pack or hold food fall within the farm definition if all food used in such activities is grown, raised, or consumed on that farm or another farm under the same ownership. The interim final rule also considers establishments that manufacture/process food as farms if all food used in such activities is consumed on that farm or another farm under the same ownership.

(Comment 44) Some commenters ask FDA to clarify whether packing and other facilities owned by more than one farm on a partnership or cooperative basis fit within the farm definition.

(Response) The farm definition extends to only those packing or holding facilities that are located on a farm or another farm under the same

ownership and the facilities are exclusively used to pack or hold food grown or raised on such farm or another farm under the same ownership. A packing shed that packs food grown or raised on several farms under different ownership is not covered by the farm definition and thus, is required to register.

(Comment 45) Some commenters argue that the farm definition should address whether a farm that engages in agriculture on several different properties under separate ownership will be considered a single farm for purposes of registration.

(Response) The definition of a farm provides that a farm must be in one general physical location and under the same ownership. In the situation described by the comment, different properties under separate ownership, if they otherwise meet the definition of farm, would be exempt from registering.

(Comment 46) Some commenters argue that a farmer who owns more than one field or piece of property and is required to register with FDA should be required to register only once, identifying on the registration form the physical location of all areas under that farmer's cultivation.

(Response) Generally, a farm is exempt from registration unless it is a mixed-type facility. A mixed-type facility performs activities of a facility that is both ordinarily required to register and ordinarily exempt. An example of a farm that is a mixed-type facility is a farm that grows oranges and processes them into orange juice for sale to a distributor at the same physical location. However, if the farmer manufactures/processes the oranges into orange juice in a different physical location, the location where the oranges are grown is exempt as a farm and the facility where manufacturing/processing occurs must register. Because registration is by individual facility, the farmer must, if required to register, register each facility separately and obtain a separate registration number for each facility. The effort to register in this situation will be reduced if the farmer registers electronically, because he can register each facility in succession, ''auto-filling'' each section of the form that repeats the information contained in the previous registration.

(Comment 47) One commenter asks FDA to clarify that the definition of farm applies to foreign, as well as domestic, farms.

(Response) The commenter is correct; the farm definition applies to both domestic and foreign farms. Therefore, foreign farms that satisfy the farm definition are not required to register, even if they export food directly to the United States. However, if such a foreign farm harvests food and manufactures/processes it before exporting it to the United States, this would be a mixed-type facility that ordinarily must register. However, the foreign facility exemption may apply to this mixed type facility if further manufacturing/processing that is not of a *de minimis* nature occurs after the food leaves the mixed-type facility and before it is exported to the United States.

(Comment 48) One commenter states that the definition of ''farm'' is circular in § 1.227(c)(3)(ii). The term ''farm'' includes: * * * (ii) Facilities that manufacture/process food, provided that all food used in such activities is consumed on that farm or another farm under the same ownership.

(Response) In the previous excerpt from the ''farm'' definition, FDA's intent is to describe a certain activity (manufacturing/processing) in which a farm may engage without losing its exemption as a farm, so long as all food manufactured/processed by the farm is consumed on that farm or another farm under the same ownership.

(Comment 49) Several commenters state that FDA's definition of ''farm'' should be size-neutral, and apply equally to integrated livestock and poultry facilities as long as the activities at such locations are limited to ''growing or raising'' farm animals for human food, but do not extend to further processing of food-producing animals into meat, milk, or eggs (which occurs at food processing and packing plants and rendering facilities) for subsequent commercial sale for consumption by humans or animals.

(Response) The proposed rule's definition of ''farm'' had no size limitation, and neither does the interim final rule's definition. FDA agrees that integrated livestock and poultry operations are ''farms,'' as long as these operations are devoted to raising animals for food, the growing of crops, or both, and otherwise engage in only those activities included in the farm definition. FDA considers milking cows and collecting eggs from chickens to be ''harvesting'' when applied to animals, because these activities are akin to harvesting crops.

(Comment 50) Several commenters ask FDA to clarify whether packing sheds, warehouses, and low temperature storage facilities located on farms are considered part of the farm.

(Response) The interim final rule clarifies the definition of ''farm'' and provides that an operation that includes on-farm packing and holding of food grown, raised, or consumed on the farm or on another farm under the same ownership is still a ''farm'' under § 1.227(c)(3). The rule also provides that an operation that includes on-farm manufacturing/processing of food, where all food is consumed on that farm or another farm under the same ownership, is still a ''farm.''

(Comment 51) One commenter requests that FDA clarify that greenhouse facilities devoted to growing fruits and vegetables are considered ''farms'' for purposes of the farm definition. The commenter states that it appears that greenhouse facilities would easily fit within the proposed definition of farm as ''[facilities] in one general physical location devoted to the growing of crops * * *'', however, FDA does not explicitly state in the proposed rule or preamble to the proposal that greenhouses would be considered farms.

(Response) FDA agrees with the commenter that a greenhouse devoted to the growing of crops is a ''farm'' under § 1.227(c)(3).

(Comment 52) One commenter, quoting the proposed definition of farm as including ''facilities that manufacture/process food, if all food used in such activities is consumed on that farm or another farm under the same ownership,'' asks FDA to clarify whether on-farm facilities that manufacture/process food sold to a third party would be required to register with FDA.

(Response) An on-farm operation engaging in manufacturing/processing food that is subsequently sold to an off-farm third party is a facility that is required to register with FDA, unless the facility qualifies under another exemption, such as the retail food establishment exemption.

(Comment 53) One commenter asks FDA to clarify whether a farm is required to register if several companies are involved in the farming operation. For example, some farms may perform their own harvesting or employ another company to provide harvesting services.

(Response) Because registration is by facility, a farm operation is not required to register, provided all of the on-farm activities are covered in the farm definition and the farm is under the same ownership. It therefore makes no difference for purposes of registration if different companies perform different services at a facility. The determinative question is whether the facility is manufacturing/processing, packing, or holding food for consumption in the United States and is not subject to an exemption.

(Comment 54) One commenter asks FDA to clarify: (1) Whether a grower of

grapes is covered under the farm definition unless the grower processes these grapes into wine and bottles or packages the wine itself; and (2) whether the grower would be required to register if the grower grows grapes, sends them to a third party who makes wine from them and bottles or packages the wine, and returns the bottled wine to the grower, who then labels the bottles.

(Response) This comment describes an example of a mixed-type facility. In the first example, the grower of the grapes who does not itself process the grapes into wine, would not be required to register its establishment because it is ''farm'' and is exempt from registration. If the grower's establishment manufactures/processes the grapes into wine and/or bottles or packages it, the establishment is a facility that must register. In the second example, the grower of the grapes would be exempt as a farm; however, labeling the wine after receiving it back from a third party is considered manufacturing/processing. Thus, both the grape grower's labeling facility and the third party's manufacturing/processing facility must register.

(Comment 55) One commenter asks whether cattle feed yards manufacturing feed that is fed onsite to the cattle are required to register.

(Response) The ''farm'' definition states that ''farm'' includes ''facilities that manufacture/process food, if all of the food used in such activities is consumed on that farm or another farm under the same ownership.'' Therefore, a cattle feed yard that manufactures/processes feed that is fed only at that feed yard or another farm or feed yard under the same ownership is a ''farm'' that is exempt from registration. Conversely, a cattle feed yard that manufactures/processes feed that is fed to cattle at another location that is under different ownership would be required to register as a manufacturing/processing facility.

(Comment 56) One commenter quotes FDA's proposed provision for contract facilities, which states:

> [t]he definition of farm does not include facilities that contract with multiple farmers to grow crops or raise animals. These facilities may manufacture/process feed and distribute it to the contract farmers for feeding to animals being raised on the farm. FDA is proposing that the facilities that manufacture/process feed for the contract farmers would be required to register. The farms that grow the crops or raise the animals would be exempt from the registration requirement.

The commenter states:

> [d]espite FDA's clarifications on its definition of farm, it does not specify what happens if these same products are later sold outside the farm or if these products are grown, harvested, held, and sold for consumption of any kind outside the farm, thus going to a second owner and facility to serve other purposes (international commerce).

(Response) This comment is not clear regarding ''what happens'' if products are ''later sold outside the farm'' or ''are grown, harvested, held, and sold for consumption of any kind outside the farm.'' The ''farm'' definition covers a facility that grows crops or raises animals for food. If an establishment sells animal feed obtained from a contract facility to a third person, that establishment would be required to register unless it was exempt as a retail food establishment. If the establishment sells the animal feed to, for example, a distributor or another business, it would not fall within the retail exemption and thus, it would be required to register.

(Comment 57) One commenter states that FDA is proposing to exempt farms from registration even if they conduct packing/holding/processing on their premises, as long as they only handle food grown on that farm or another farm under the same ownership, or if they mix feed from outside sources for exclusive use on that farm. However, the commenter asserts that most farmers that pack or process the crops that they grow may sell or pay for the discarded materials, such as sorted-out produce, hulls, etc., to be used as feed. The commenter asks:

> [i]s it FDA's intent to include all incidental by-products from processing that go to feed as feed production, therefore triggering the registration requirement? Would the by-products sold/disposed of as feed need to be listed among the items produced by a facility that is registering for other reasons?

(Response) This comment raises several questions regarding the status of farms that produce animal feed or animal feed components. The farm definition in the interim final rule includes farms packing or holding food, if all of the food used in animal feed production activities is grown or raised on that farm or consumed on that farm. Similarly, a farm that manufactures/processes animal feed is not required to register, if all of the food used in such activities is consumed on that farm or another farm under the same ownership. Thus, if a farm manufactures/processes food grown on the farm and feeds by-products of these crops to the farm's own animals, the farm does not need to register. However, if the facility sells the by-products to another entity, it must register, unless it is otherwise exempt.

Any registered facility that is producing such by-products may identify such products in section 11b of the registration form (Form 3537). Because the categories listed in section 11b of the form are not included in § 170.3, they are optional.

7. Food

(Comment 58) The agency received a number of comments regarding the proposed definition of ''food'' provided in § 1.227(c)(4). Most of these commenters asserted that the definition was too broad and, for a number of reasons, recommended that certain items covered by the proposed definition be excluded from the rule's coverage. In particular, the commenters requested that food packaging and components of food packaging, other food contact articles (such as food processing equipment and components of such equipment, glassware, dishware, cutlery, kitchen appliances), and so-called indirect additives (including those applied to food contact surfaces) be excluded from the interim final rule's definition of ''food.''

In support of these proposed exclusions, many commenters cited the language in section 415(a)(1) of the FD&C Act requiring registration of facilities that manufacture, process, pack, or hold ''food for consumption in the United States,'' claiming that such language indicates that Congress intended the registration provision to apply only to facilities that manufacture, process, pack or hold ''edible food,'' ''traditionally understood as food,'' or articles that are ''intended for consumption.'' In addition, one commenter cited the reference in section 415(a)(2) of the FD&C Act to the general categories of food provided in § 170.3, which does not include listings for food packaging or other food-contact materials or their components. Several commenters argued that extending registration to facilities that produce food-contact materials was not consistent with the purpose of the Bioterrorism Act and that there was no historical evidence associating foodborne illness with packaging or other food contact material. Finally, some commenters argued that an overly broad definition of ''food'' would have the effect of diluting the government's resources and thereby hampering the government's opportunity to achieve the protective goals of the Bioterrorism Act.

Other commenters argued that additional items or facilities should be excluded from the registration requirement; those comments are addressed in section III.D of this document.

Several commenters favor inclusion of packaging and its components. Some commenters point out that food packaging and components are ''food'' under section 201(f) of the FD&C Act. Some of these commenters suggest that FDA should require facilities currently manufacturing substances subject to approval under section 409 of the act to register, and FDA should clarify the definition at § 1.227(c)(4), and consider outer packaging food.

(Response) Relying on the act's definition of ''food'' in section 201(f), the proposed rule defined ''food'' as follows:

> Food has the meaning given in section 201(f) of the act. Examples of food include, but are not limited to, fruits, vegetables, fish, dairy products, eggs, raw agricultural commodities for use as food or components of food, animal feed, including pet food, food and feed ingredients and additives, *including substances that migrate into food from food packaging and other articles that contact food*, dietary supplements and dietary ingredients; infant formula, beverages, including alcoholic beverages and bottled water, live food animals, bakery goods, snack foods, candy, and canned foods (emphasis added).

Thus, food packaging and other food contact materials were expressly included as examples of ''food'' in the proposed definition, with the result that, under the rule as proposed, facilities that manufacture/process, pack, or hold food packaging, food-contact materials, or their components would have been required to register. (See 68 FR 5378 at 5382). The breadth of the proposed definition of ''food'' was based on both the statutory definition in section 201(f)(3) of the FD&C Act, which defines articles used as components of food as ''food,'' and the case law interpreting the definition, including *Natick Paperboard* v. *Weinberger*, 525 F.2d 1103 (1st Circuit 1975) (paperboard containing PCBs intended for food use is adulterated food); *U.S.* v. *Articles of food * * * 688 Cases * * * of Pottery (Cathy Rose)*, 370 F. Supp. 371 (E.D. Mi. 1974) (ceramic pottery that leaches lead is adulterated food).

The comments on food-contact substances raise the question of what Congress intended ''food'' to mean in terms of registration of facilities that manufacture, process, pack, or hold ''food.'' In construing the registration provision of the Bioterrorism Act , FDA is confronted with two questions. First, has Congress directly spoken to the precise question presented? (''*Chevron* step one''). *Chevron, U.S.A., Inc.* v. *NRDC, Inc.*, 467 U.S. 837, 842 (1984). To find no ambiguity, Congress must have clearly manifested its intention with respect to the particular issue. *Young* v. *Community Nutrition Institute*, 476 U.S. 974, 980 (1986). If Congress has spoken directly and plainly, the agency must implement Congress's unambiguously expressed intent. *Chevron,* 467 U.S. at 842–843. If, however, the Bioterrorism Act is silent or ambiguous as to the meaning of ''food,'' FDA may define ''food'' in a reasonable fashion (''*Chevron* step two''). *Chevron,* 467 U.S. at 842–843; *FDA* v. *Brown & Williamson Tobacco Corp.*, 529 U.S. 120, 132 (2000).

The agency has determined that, in enacting section 415, Congress did not speak directly and precisely to the meaning of ''food.'' As noted, the FD&C Act has a definition of ''food'' at section 201(f). It may be a reasonable assumption that, when the term ''food'' is used in the FD&C Act, section 201(f) applies. However, although there may be ''a natural presumption that identical words used in different parts of the same act are intended to have the same meaning [citation omitted], * * * the presumption is not rigid * * *'' *Atlantic Cleaners & Dyers, Inc.* v. *U.S.*, 286 U.S. 427, 433 (1932). *Accord: U.S.* v. *Cleveland Indians Baseball Co.*, 532 U.S. 200, 213 (2000). Thus, the same word may be given different meanings, even in the same statute, if Congress intended different interpretations or if different interpretations are reasonable (at ''Chevron Step two.''). *Atlantic Cleaners & Dryers, Inc.*, *supra*.

Even before the Bioterrorism Act amendments, the term ''food'' was not given an identical meaning throughout the FD&C Act. For example, in construing the parenthetical ''(other than food)'' in section 201(g)(1)(C), the seventh circuit noted that Congress meant to exclude only ''articles used by people in the ordinary way that most people use food-primarily for taste, aroma, or nutritive value'' and not all substances defined as food by section 201(f) (*Nutrilab, Inc.* v. *Schweiker*, 713 F.2d 335, 338 (7th Cir. 1983)). Similarly, section 409(h)(6) of the FD&C Act defines a food-contact substance as ''any substance intended for use as a component of materials used in manufacturing, packing, packaging, transporting, or holding *food* if *such use* is not intended to have any technical effect in *such food* (emphasis added).'' This definition makes sense only if ''food'' in this context excludes materials that contact food because components of food contact materials are plainly intended to have a technical effect in such materials.[1]

Thus, in this larger statutory context, FDA has evaluated section 415 to determine whether the meaning of the word ''food'' is ambiguous. In conducting this *Chevron* step one analysis, all of the traditional tools of statutory interpretation are available to determine whether the language Congress used is ambiguous. *Pharmaceutical Research & Manufacturers of America* v. *Thompson*, 251 F. 3d 219, 224 (D.C. Cir. 2001). Beginning with the language of the statute, in section 415(a)(1), ''food'' is used to describe who must register: ''The Secretary shall by regulation require that any facility engaged in manufacturing, processing, packing, or holding *food for consumption in the United States* to be registered with the Secretary (emphasis added).'' The Bioterrorism Act is silent as to the meaning of ''food.'' Furthermore, the prepositional phrase ''for consumption in the United States'' creates an ambiguity because it could be read to suggest that ''food'' within the context of the section 415 registration requirement only refers to food that is ordinarily thought of as ''consumed.'' By modifying the term ''food'' by the prepositional phrase ''for consumption in the United States,'' Congress apparently intended to limit the term ''food'' to something less than the broad definition in section 201(f). Although ''consume'' has multiple meanings, most relevant in this context is ''to eat or drink up; ingest.'' *Webster's II New Riverside University Dictionary* (1994). Emphasizing the word ''consumption'' could appear to limit ''food'' to those items commonly eaten primarily for taste, aroma, or nutritive value. *Nutrilab* v. *Schweiker*, *supra* at 338.

Where, as here, the statutory language on its face does not clearly establish Congress's intent, it is appropriate to consider not only the particular statutory language at issue, but also the language and design of the statute as a whole. *Martini* v. *Federal Nat'l Mortgage Association*, 178 F. 3d 1336, 1345 (D.C. Cir. 1999), citing *K Mart Corp.* v. *Cartier, Inc.*, 486 U.S. 281 (1988). Indeed, the analysis should not be confined to the specific provision in isolation because the meaning or ambiguity of a term may

[1] FDA's long-standing interpretation of the FD&C Act's definition of color additive, section 201(t), is an additional example of where ''food'' is used more narrowly than as defined in section 201(f). A color additive is defined in section 201(t) as a substance that ''when applied to a food * * * is capable * * * of imparting color thereto.'' The agency's food additive regulations distinguish between color additives and ''colorants,'' the latter being used to impart color to a food-contact material (21 CFR 178.3297(a)). (See also 21 CFR 70.3 (f)). Thus, ''food'' as it appears in the statutory definition of color additive, necessarily excludes food-contact materials.

be evident only when considered in a larger context. *FDA* v. *Brown & Williamson Tobacco Corp.*, *supra* at 132 (2000).

Consistent with this instruction, FDA has considered other parts of the registration provision in assessing whether the meaning of ''food'' in section 415(a)(1) ambiguous. In particular, FDA has considered section 415(b)(1). In defining ''facility'' for purposes of section 415, Congress expressly exempted ''farms; restaurants; other retail food establishments; nonprofit food establishments in which food is prepared for or served directly to the consumer * * *'' These exemptions do not make clear whether Congress intended them to cover only food that is ordinarily eaten at some point by consumers primarily for taste, aroma, or nutritive value or whether, for example, a retail food establishment could include retailers of food contact materials, such as retail cookware stores.

The legislative history of section 415 also supports the conclusion that Congress did not speak directly to the meaning of ''food'' in that Bioterrorism Act provision. Such history is appropriately consulted at *Chevron* step one. *Atherton* v. *FDIC*, 519 U.S. 213, 228–29 (1997). In particular, the Conference Report to H.R. 3448, which became the Bioterrorism Act, explains what Congress intended by ''retail food establishments,'' which is used to create an exemption from registration:

> The Managers intend that, for the purposes of this section, the term ''retail food establishments'' includes establishments that store, prepare, package, serve, or otherwise provide articles of food directly to the retail consumer for human consumption, such as grocery stores, convenience stores, cafeterias, lunch rooms, food stands, saloons, taverns, bars, lounges, catering or vending facilities, or other similar establishments that provide food directly to a retail consumer.

H.R. Conf. Rep. No. 481, 107th Cong., 2d Sess., 133 (2002).

Similarly, the Conference Report notes that the term ''non-profit food establishments'' includes not-for-profit establishments in which food is prepared for, or served directly to the consumer, such as food banks, soup kitchens, homebound food delivery services, or other similar charitable organizations that provide food or meals for human consumption.'' (*Id.* at 133–34.) Notably, the examples provided by Congress for both types of exempt food establishments are not those that generally sell or distribute food contact materials. Accordingly, the legislative history of section 415 creates additional ambiguity as to the meaning of ''food.''

Finally, a review of section 307 of the Bioterrorism Act (the prior notice of food imports provision) and its legislative history confirms that the meaning of the word ''food'' when used in the Bioterrorism Act, including section 415, is ambiguous. The Bioterrorism Act's registration provision is one piece of several enacted by Congress to enhance the safety of the U.S. food supply. Registration works in concert with prior notice (section 307 of the Bioterrorism Act). This is reflected in section 305(c) of the Bioterrorism Act, which requires that food from an unregistered facility be held at the port when offered for import. Thus, this provision and its legislative history are of particular relevance in determining whether ''food'' is ambiguous in the registration provision. The legislative history of section 307 of the Bioterrorism Act supports the ambiguity of the term ''food'' in the Bioterrorism Act. For example, the Conference Report states that the prior notice provision is to be construed not to apply to ''packaging materials if, at the time of importation, such materials will not be used for or in contact with food * * *'' (See H.R. Conf. Rep. No. 481, 107th Cong., 2d Sess., 136 (2002).) This statement could be read to mean that the term ''food'' does not include packaging or other materials that contact food.

Having concluded that the meaning of ''food'' in section 415(a)(1) is ambiguous, FDA has considered how to define the term so as to achieve a ''permissible construction'' of the registration provision. *Chevron, USA, Inc.* v. *NRDC, Inc., supra* at 843. In conducting this *Chevron* step two analysis, the agency has considered the same information evaluated at step one of the analysis. *Bell Atlantic Telephone Co.* v. *FCC,* 131 F. 3d 1044, 1049 (D.C. Cir. 1997); *Chevron U.S.A., Inc.* v. *FERC*, 193 F. Supp. 2d 54, 68 (D.D.C. 2002). FDA has determined that it is permissible, for purposes of the registration provision, to exclude food contact materials from the definition of ''food.''

Excluding food-contact materials (including food packaging) is consistent with the statutory phrase, ''food for consumption'', section 415(a)(1), in that foods that are ''consumed'' are generally those intentionally eaten for their taste, aroma, or nutritive value. In addition, excluding food contact materials from ''food'' in this regulation is consistent with the exemptions in section 415(b)(1), as well as the legislative history of section 415, in that the establishments exempted by statute and the entities used as examples of retail and nonprofit food establishments are those that sell, distribute, or otherwise provide what is considered food in the conventional sense and, generally speaking, are not purveyors of food contact articles. Finally, restricting ''food'' to substances other than food-contact materials is consistent with the legislative history of the prior notice provision of the Bioterrorism Act, a provision linked to the registration provision.

As discussed in responses to comments 64 and 65, FDA has also interpreted ''food'' for purposes of section 415 to exclude pesticides as defined in FIFRA (7 U.S.C. 136(u)). Accordingly, for the reasons discussed in response to this comment and comments 64 and 65, FDA has determined that a reasonable interpretation of ''food'' for purposes of section 415 is as follows. Section 1.227(b)(4) of this interim final rule has been revised to provide:

> Food has the meaning given in section 201(f) of the act, (i) except for purposes of this subpart, it does not include: (A) food contact substances as defined in section 49(h)(6) of the act (21 U.S.C. 348 (h)(6)); or (B) pesticides as defined in 7 U.S.C 136(u). (ii) Examples of food include fruits, vegetables, fish, dairy products, eggs, raw agricultural commodities for use as food or as components of food, animal feed (including pet food), food and feed ingredients, food and feed additives, dietary supplements and dietary ingredients, infant formula, beverages (including alcoholic beverages and bottled water), live food animals, bakery goods, snack foods, candy, and canned foods.

(Comment 59) One commenter asks FDA to address the foreign facility exemption as it applies to ''products that migrate into food from food packaging and other articles that contact food.''

(Response) Because the interim final rule excludes food contact substances from the definition of ''food,'' establishments that manufacture/process, pack, or hold food contact materials or components of such materials are not required to register, unless these establishments also manufacture/process, pack, or hold ''food'' as defined in § 1.227(b)(4).

(Comment 60) A commenter asks whether water collection and distribution facilities are required to register as food facilities if the owner or operator of such facility knows that the water is to be used as a food ingredient. The same commenter asks whether community water systems that supply water to bottled water facilities or to bottled water sources must register.

(Response) FDA has determined that nonbottled drinking water collection and distribution organizations and their

structures should not be included in the definition of ''facility'' for purposes of registration. Under section 305(a) of the Bioterrorism Act, the term ''facility'' includes ''any factory, warehouse, or establishment.'' Congress did not specify any definitions for these terms. According to Webster's II New Riverside University Dictionary (1994), the most relevant definition of ''establishment'' is ''a business firm, club, institution, or residence, including its possessions and employees.'' Where, as here, the statutory language on its face does not clearly establish Congressional intent, it is appropriate also to consider other language in the section, the language and design of the statute as a whole, and the larger context to determine if the term is ambiguous. *FDA* v. *Brown & Williamson Tobacco Corp.*, 529 U.S. 120, 132 (2000); *Martini* v. *Federal Nat'l Mortgage Ass'n,* 178 F.3d 1336, 1345 (D.C. Cir. 1999), citing *K Mart Corp.* v. *Cartier, Inc.*, 486 U.S. 281 (1988).

Traditionally, the Environmental Protection Agency (EPA) has exercised a primary role in the regulation of public water systems (see 44 FR 42775, July 20, 1979). Under the Safe Drinking Water Act (42 U.S.C. 300(f) *et seq.*) (SDWA), EPA regulates public water systems, which are water systems that have at least 15 service connections or serve 25 people per day for 60 days of the year. In addition, Title IV of the Bioterrorism Act creates an extensive scheme for protecting from bioterrorism threats community water systems serving over 3,300 persons. Title IV amends the SDWA to require that such community water systems submit to EPA vulnerability assessments of their facilities and emergency response plans to deal with the possibility of a bioterrorist attack. EPA is authorized to provide funds to community water systems to address critical security enhancements and significant public health threats.

FDA believes that the language and design of the Bioterrorism Act, which in Title IV lays out strategies under EPA's authority for protecting the safety and supply of public drinking water, creates ambiguity about whether Congress intended to require drinking water facilities to register with FDA as food facilities. The traditional EPA role in regulating public water systems, as established by federal legislation and implemented by Federal agencies, also creates ambiguity about Congressional intent to include drinking water facilities within the scope of FDA's food registration scheme.

Based on EPA's primacy in regulating public water systems and on the Bioterrorism Act scheme for water systems in Title IV, FDA concludes that it is reasonable to interpret the term ''facility'' to exclude nonbottled drinking water collection and distribution establishments, such as community water systems. Therefore, FDA has revised § 1.227(b)(2) to exclude these nonbottled drinking water establishments from the definition of ''facility.''

Bottled water, on the other hand, has traditionally been regulated by FDA (see 21 U.S.C. 349, 21 CFR parts 129, 165). Moreover, Title IV of the Bioterrorism Act does not address bottled water issues, but only public drinking water systems. Therefore, FDA believes it is reasonable to include establishments that manufacture/process, pack, or hold bottled water in the definition of ''facility.''

FDA also has primary responsibility for drinking water that is used in the manufacturing/processing of food that is not bottled water. Thus, once drinking water enters a facility where it is used in food manufacturing/processing, the water is regulated by FDA. Because such facilities are food facilities in the first place, they already are required to register with FDA without regard to the water source.

(Comment 61) Several commenters asked whether facilities that produce water coolers, ozone equipment, carbon dioxide, water storage silos, plastic resins, or chlorine must register with FDA.

(Response) Water coolers, ozone equipment, water storage silos, and plastic resins are food-contact substances (section 409(h)(6) of the FD&C Act) and therefore, facilities that manufacture/process, pack, or hold such items are not required to register because these items are not ''food'' as defined in this regulation. In contrast, carbon dioxide, if used to make carbonated beverages or to aerate food, is a component of food (section 201(f)(3) of the FD&C Act) that is intended to have a technical effect in the food and therefore, is ''food'' as defined in this interim final rule. Similarly, chlorine, if used in bottled water, is also a component of food (section 201(f)(3) of the FD&C Act) that is intended to have a technical effect in the food and therefore, is ''food'' as defined in this interim final rule. Accordingly, facilities that manufacture/process, pack, or hold carbon dioxide or chlorine that will be used in food products must register. Please see the response to comment 62, which addresses multiuse substances.

(Comment 62) Commenters suggest that foreign facilities that process or refine vegetable oils not intended for direct inclusion in food or animal feed should be exempt from registration. These commenters argue that where bulk ingredients have both food and non-food uses, the standard for registration should be whether the commodity has been sufficiently refined to be directly added to food.

(Response) This interim final rule requires that any domestic facility that manufactures/processes, packs, or holds ''food'' must be registered unless the facility satisfies one of the exemptions in § 1.226. Foreign facilities are subject to the same registration requirement except that a manufacturer/process or is not required to be registered if a subsequent facility outside the United States performs further manufacturing/processing of more than a *de minimis* nature. For purposes of the interim final rule, ''food'' has the definition in section 201(f) of the FD&C Act except that ''food contact substances'' (section 409(h)(6)) and ''pesticides'' (7 U.S.C. 136(u)) are excluded from ''food.'' Under section 201(f), ''food'' means ''articles used for food or drink'' (section 201(f)(1)) and articles ''used for components of any such article'' (section 201(f)(3).) The determination of whether a substance is ''food'' is not a question of intended use. *Nutrilab* v. *Schweiker*, 713 F.2d. 335, 337 (7th Cir. 1983); *U.S.* v. *Technical Egg Products*, 171 F.Supp. 326, 328 (N.D. Ga. 1959); *U.S.* v. *52 Drums Maple Syrup*, 110 F.2d 914, 915 (2d Cir. 1940). Courts interpreting the ''food'' definition in the act have held that articles at both ends of the food continuum are ''food'' for purposes of the FD&C Act. *United States* v. *Tuente Livestock*, 888 F. Supp. 1416 (S.D. Ohio, 1995) (live animals for food use are ''food'' under the FD&C Act); *U.S.* v. *Technical Egg Products, supra,* 171 F.Supp. at 328 (rotten eggs are ''food.'') Thus, FDA believes that a facility that manufactures/processes, packs, or holds food must be registered (unless subject to one of the exemptions in § 1.226) even if the food is not yet in the form in which it will be used for food. FDA will consider a product as one that will be used for food if the owner, operator, or agent in charge of the facility reasonably believes that the substance is reasonably expected to be directed to a food use. In the case of vegetable oil that is not yet food grade, FDA believes that a facility that manufactures/processes, packs, or holds such oil must be registered (assuming the facility does not qualify for an exemption in § 1.226) if the owner, operator, or agent in charge reasonably believes that oil manufactured/processed, packed, or held at the facility

is reasonably expected to be directed to a food use.

(Comment 63) Several commenters assert that processing aids, such as defoaming agents and biocides, are used in the production of food but are not food in and of themselves and thus facilities that manufacture/process, pack, or hold such substances need not register.

(Response) FDA notes that there are a wide variety of processing aids, including processing aids used in packaging and other food contact materials and processing aids used in ''traditional'' foods. The commenters do not specify which type or types of processing aids they believe are not ''food'' such that establishments that manufacture/process, pack, or hold these substances should not be required to register.

Whether a facility that manufactures/processes, packs, or holds a processing aid must be registered depends upon whether such a substance is ''food'' under this rule. As noted, for purposes of the interim final rule, ''food'' excludes ''food contact substances'' (section 409(h)(6)). In addition, ''food'' excludes ''pesticides'' (7 U.S.C. 136(u)). Thus, if the processing aid is not a pesticide and is intended to have a technical effect in the food to which it is added, the substance is not exempt from the definition of ''food'' and the facility must be registered unless otherwise exempt under § 1.226 (*i.e.*, if it is a foreign facility, and food from such facility undergoes further manufacturing/processing (including packaging) by another facility outside the United States). In terms of processing aids, this means that, generally speaking, facilities that manufacture/process, pack, or hold processing aids used in the production of ''traditional'' food will be required to register. This is a reasonable result in that such processing aids are intentionally and directly added to ''traditional'' foods.

(Comment 64) Several commenters request an exemption for facilities dealing with agricultural chemicals (fertilizer, pesticides) since these are not food for consumption and they are already registered with EPA. Several other comments asked whether facilities that manufacture/process, pack, or hold anti-microbial pesticides used in or on food must register.

(Response) As discussed in the response to comment 58, the meaning of ''food'' in section 415 is ambiguous. Therefore, FDA may define ''food'' in a reasonable manner. FDA believes that excluding ''pesticides ''(7 U.S.C. 136(u)) from the definition of food is reasonable. Agricultural pesticides, including those used in or on food for human or animal use, are comprehensively regulated by the Federal Government. Under the Federal Insecticide, Fungicide, and Rodenticide Act, 7 U.S.C. 136 *et seq.,* all pesticides (both food and nonfood use) are registered with EPA. As part of the registration process, establishments in which pesticides are produced must register with EPA (40 CFR 167.3 and 167.20). As part of the importation process, prior notice of all pesticide shipments must be given to EPA (19 CFR 12.112).

Importantly, the Federal regulatory scheme for pesticides was substantially revised in 1996 by the Food Quality Protection Act (FQPA) (Public Law 104–170), and EPA's authority over pesticides was consolidated and also expanded. As a result of FQPA, pesticides and their residues are subject to substantial and comprehensive regulation by EPA. Where another Federal agency has the types of specific and comprehensive authority described above to regulate the safety of certain substances (here, pesticides), FDA believes that it is appropriate to interpret ''food'' in section 415 of the FD&C Act to not include such substances. Accordingly, FDA has revised the definition of ''food'' in § 1.227(b)(4) to exclude pesticides as defined by FIFRA (7 U.S.C. 136(u)). Therefore, FDA agrees that facilities that manufacture/process, pack, or hold ''pesticides intended for use in or on food'' need not register with FDA.

(Comment 65) Several comments asked whether facilities that manufacture/process, pack, or hold antimicrobial pesticides used in or on food must register.

(Response) As noted previously, for the purposes of this rule, the term ''food'' is defined to exclude any substance defined as a ''pesticide'' in FIFRA (7 U.S.C. 136(u)). Anti-microbial pesticides meet the FIFRA definition of ''pesticide.'' Thus, facilities that manufacture/process, pack, or hold such substances are not required to register.

(Comment 66) Several commenters question how live food animals relate to the definition of food. One commenter indicates that many small animals are shipped to the United States with the intention to grow them in the United States for food and thus, such animals are not animals for food at the time they are imported. This commenter asks FDA to exempt live food animals from the definition of food.

(Response) As discussed in the response to comment 58, the meaning of ''food'' in section 415 is ambiguous. Therefore, FDA may define ''food'' in a reasonable manner. FDA believes that it is reasonable to interpret ''food'' in section 415 to include live animals. First, such inclusion is consistent with the language in section 415(a), ''food for consumption,'' in that live animals are raw material for, and thus reasonably considered components of, items traditionally consumed for taste, aroma, or nutritive value. Moreover, the products of live food animals are an integral part of the food consumed in the United States, and thus, it is logical to protect the raw materials (*i.e.*, the live animals) and such animal food products by including them under the Bioterrorism Act's safeguards. Second, Congress provided several statutory exemptions from the registration requirement, including ''farms,'' section 415(b)(2), which would reasonably include those raising animals as well as those growing fruits and vegetables. By exempting farms, Congress indicates that, absent an exemption, establishments where fruits, vegetables, and animals are produced would be ''food facilities'' subject to registration. Third, the inclusion of live animals in the definition of ''food'' is consistent with the statutory language of the Bioterrorism Act as a whole. In particular, the recordkeeping, administrative detention, and prior notice provisions of the Bioterrorism Act all include an explicit reference to animals in the statutory standard, ''serious adverse health consequences or death to humans or animals.'' (*See, e.g.*, 21 U.S.C. 334(h)(1)(A), 350c(a), and 381(m)(2)(B)(ii).) In each of these provisions, this standard serves as a trigger for FDA action. This standard does not appear in the registration provision, because there is no need for a trigger for FDA action in registration. FDA does not believe that the fact that this standard does not appear in the registration provision evidences the intent on the part of Congress that facilities that manufacture/process, pack, or hold live animals need not register. Accordingly, the interim final rule's definition of ''food'' includes live food animals.[2] FDA notes, however, that a facility that exports live food animals directly to the United States may be exempt as a ''farm'' if it satisfies the definition in § 1.227(b)(3).

(Comment 67) Some commenters ask that research and development (R&D) facilities and facilities that manufacture/

[2] Defining ''food'' to include live animals is also consistent with the case law interpreting the term ''food'' in the broader context of the act. (See *United State* v. *Tuente Livestock*, 888 F. Supp. 1416 (S. D. Ohio, 1995).)

process, pack, or hold food samples should not be considered ''facilities'' for purposes of FDA registration. The commenters note that R&D facilities typically hold food and often process it on a small scale, but this food is intended for research purposes and not for commercial sale or public consumption. The commenters explain that sample facilities distribute samples internally to employees and are not commercially distributed.

(Response) Under section 305 of the Bioterrorism Act, facilities are required to register if they manufacture/process, pack, or hold food for consumption in the United States. Therefore, R&D facilities and sample facilities that manufacture/process, pack, or hold food that is consumed in the United States, either by the facility's employees or others are required to register. However, if R&D facilities and sample facilities manufacture/process, pack, or hold food and this food is not for consumption or actually consumed in the United States, the facilities are not subject to registration.

(Comment 68) One commenter takes issue with FDA's inclusion of animal feed within the definition of food. This commenter states that in the legislative history of the Bioterrorism Act, Rep. Shimkus (R–IL) repeatedly states that the registration requirement is intended to apply to food for ''human'' consumption. The commenter also indicates that the Conference Report to the Bioterrorism Act states that the retail exemption applies to facilities that sell to the consumer ''for human consumption,'' stating that FDA took comments on this issue in the proposed rule. The commenter argues that because the recordkeeping, administrative detention, and prior notice parts of the Bioterrorism Act specifically refer to requirements regarding food for animals, as well as for humans, while the registration part of the Bioterrorism Act does not, FDA should limit the food definition to food for human consumption.

(Response) As discussed in the response to comment 58, the meaning of ''food'' in section 415 is ambiguous. Therefore, FDA may define ''food'' in a reasonable manner. As noted in the response to comment 66, sections 303, 306, and 307 of the Bioterrorism Act reflect Congressional concern with the health and safety of ''animals.'' In that response, FDA also explains why, logically, the standard in question (''serious adverse heath consequences to human or animals'') need not appear in section 305 of the Bioterrorism Act . One important way in which to safeguard animals is to protect their food supply. FDA believes that it is reasonable to include food consumed by animals in the definition of ''food'' and thus, to require the registration of facilities that manufacture/process, pack, or hold food for consumption by animals. Accordingly, the interim final rule's definition of ''food'' in § 1.227(b)(4) includes food for consumption by animals.

8. Holding

FDA received many comments regarding whether facilities that hold products on a temporary basis are required to register as holders. Because these comments also questioned whether these units fit within the definition of ''facility,'' FDA has addressed those issues in comment 44 and its response.

(Comment 69) Several commenters request that FDA clarify who is required to register and pay the costs for storage if a manufacturer/processor sends food to a warehouse for holding under the manufacturer/processor's name before export to the United States.

(Response) FDA interprets this question as applying solely to the warehouse, not the manufacturer/processor. Each facility that holds unprocessed food that will be imported into the United States in its unprocessed form for consumption in the United States must be registered with FDA, unless it is exempted by this rule. Additionally, each foreign facility that holds food destined for consumption in the United States subsequent to the last foreign manufacturer/processor must be registered with FDA, unless it is exempted by this rule. Consistent with the plain language of the Bioterrorism Act, the interim final rule places the responsibility of registering a facility on the owner, operator, or agent-in-charge of such facility. Although the interim final rule permits the owner, operator, or agent in charge to authorize an individual to register the facility, the facility's owner, operator, or agent in charge retains the legal responsibility to ensure that the facility is properly registered with FDA. In the situation raised in the comment, whether the warehouse or the manufacturer/processor pays the cost of such storage is a private matter between the manufacturer/processor and the warehouse.

On its own initiative, FDA has made an editorial change in this section for clarity.

9. Manufacturing/Processing

(Comment 70) One commenter requests FDA to clarify whether commercial ripening of fruit fits within the definition of ''manufacturing/processing.'' The commenter states that some cargo containers are equipped with technologies that artificially ripen fruit while in transit. The commenter states that ''such technological advancements should not change the interpretation of what defines a facility under the rule,'' and requests that FDA not consider this activity manufacturing/processing.

(Response) Because this activity involves ''treating,'' ''modifying,'' or ''manipulating'' food, it constitutes manufacturing/processing as defined by the interim final rule (21 CFR 1.227(b)(6). The fact that these manufacturing/processing activities occur in a transport vehicle does not alter the fact that these activities are manufacturing/processing. Thus, a vehicle engaging in the artificial ripening of food while in transit is required to register.

On its own initiative, FDA has made several editorial changes in this section for clarity.

10. Nonprofit Food Establishment

FDA received no comments on this issue. On its own initiative, FDA has made several changes in this section to be consistent with the legislative history for section 305 of the Bioterrorism Act (21 U.S.C. 415). FDA has also made several editorial changes in this section for clarity.

11. Packing

(Comment 71) One commenter asks FDA to differentiate between ''packing'' and ''packaging.'' The commenter states that although arguably the terms could be used interchangeably, they are in fact materially different. The commenter states that this distinction is especially important because FDA considers ''packaging material'' food under § 1.227(c)(4).

(Response) FDA agrees with the commenter and differentiates between these terms in the interim final rule. The interim final rule defines ''packaging'' (when used as a verb) as ''placing food into the container that directly contacts the food and that the consumer receives.'' (§ 1.227(b)(8)). FDA has redefined ''packing'' as ''placing food into a container other than packaging the food'' (§ 1.227(b)(9)). FDA notes that packaging material is no longer included in the definition of ''food'' as revised in this interim final rule.

(Comment 72) One commenter asks whether putting food into tote bins and bulk containers is considered ''packing'' for purposes of this rule.

(Response) Putting food into tote bins and bulk containers is ''packing'' as

defined in the interim final rule (§ 1.227(b)(9)), because it is ''placing [food] into a container other than packaging the food.''

12. Port of Entry

(Comment 73) Several commenters ask that the definition of ''port of entry'' be modified so that it is consistent with the U.S. Customs definition, which is ''the port at which Customs entry is made for the shipment of imported food for consumption in the United States. This port may be different than the Port of Arrival, which is defined as the first port at which the carrier transporting the merchandise arrives.'' A commenter states that creating a new definition of ''port of entry'' is contrary to Congress's intent, which it may be presumed was based on Congress's awareness of Customs' definition of the term.

One commenter states that two Federal Government agencies having two definitions for the same term is potentially troublesome, and ''lays the groundwork for confusion and conflict regarding where and when proper declaration is required.'' Another commenter states that FDA's proposed definition of ''port of entry'' will create substantial hardship for an importer of the food, who is usually located in close proximity to the inland port and is better equipped to handle compliance or clearance issues locally. The commenter states that, under FDA's proposed definition of ''port of entry,'' imports would be subject to review by two separate FDA Districts, that of the port of arrival and that of the port of entry. This would greatly increase FDA's workload. The commenter also indicates that FDA's proposed definition of ''port of entry'' would create substantial problems if a foreign facility fails to register, because there is no provision in the statute for FDA to issue a refusal of admission that would enable the importer to export the goods, or any provision for the goods to be designated as general order status. In this case, the importer could not file a consumption entry, after which FDA could issue a refusal of admission under 21 U.S.C. 381(a), because a consumption entry cannot be filed until the goods have arrived at the inland port.

These commenters also argue that FDA's concern that allowing food to be shipped inland before verifying registration could result in loss of government control over the food is inconsistent with the statutory objective. This objective is to prevent food imports from being released from Customs' control until FDA has had an opportunity to screen the shipment and determine if it presents a risk of bioterrorism. The commenter explains that, under Customs' regulations, all food transported in bond to an inland port of entry is subject to Customs' legal control until a consumption entry is filed and a permit for release is issued. Even if cargo is bound for consumption entry in an inland port, the cargo is still subject to detention or inspection by Customs or FDA at the port of arrival. One commenter states that a revised definition of port of entry would also assist express carriers, who are required to hold a shipment in their control until all regulatory agencies have released it.

(Response) As discussed in detail in response to comment 151, this interim final rule does not include a provision regarding consequences for failure to register on imported food. Because the definition of ''port of entry'' is only relevant to the consequences of failure to register when attempting to import food, we have removed the definition of ''port of entry'' from this interim final rule. FDA has defined the term ''port of entry'' in the interim final rule on prior notice of imported food published elsewhere in this **Federal Register**.

13. Restaurants

(Comment 74) One commenter asks FDA to specify that commissaries that are a single source of food for large populations via large chain restaurants should not be exempt from registration as restaurants.

(Response) FDA agrees with the commenter that facilities, such as commissaries or central kitchens that provide food to restaurants that subsequently serve the food to customers, are not restaurants. The proposed definition of restaurant is limited to establishments that prepare and sell food directly to consumers for immediate consumption. Although central commissaries prepare food that is eventually served to consumers, these facilities do not do so directly. Accordingly, FDA is clarifying in the interim final rule that commissaries, central kitchens, and other similar facilities that do not prepare and serve food directly to consumers are not restaurants and thus, are required to register with FDA.

(Comment 75) Several commenters agree with FDA that the restaurant definition (and therefore, the exemption) should include pet shelters, kennels, and veterinary facilities. One of these commenters requests that FDA include these facilities in the interim final rule itself, as opposed to the preamble.

(Response) The preamble to the proposed rule stated that, by analogy, pet shelters, kennels, and veterinary facilities were included in the restaurant exemption. FDA received no comments disagreeing with this approach. For clarity, the interim final rule's definition of restaurant expressly includes pet shelters, kennels, and veterinary facilities.

On its own initiative, FDA has made several editorial changes in this section for clarity.

14. Retail Food Establishment

The interim final rule substitutes the statutory term ''retail food establishment'' for the term ''retail facility,'' which was used in the proposed rule.

(Comment 76) Some commenters state that the definition of retail facility as ''a facility that sells food products directly to consumers only,'' should be revised to delete ''only.'' This is based on the following arguments: 148 Cong. Rec. H2858 specifies that retail food establishments include those facilities ''attendant'' to retail operations; because the proposed definition of retail food establishment included commissaries, distribution facilities for grocery stores, which are also attendant facilities, should be included as well; the legislative history makes several references to retail as ''sale to consumers as its primary function,'' warehouse clubs should be included in the definition of retail facility, based on this language at 148 Cong. Rec. H2726: ''[Retail] does not include a warehouse that does not provide articles of food directly to a retail consumer as its primary function * * *.''

(Response) FDA agrees in part with these comments. Accordingly, we have revised the definition of retail food establishment to eliminate the restriction that such facilities must sell only to consumers to be considered a retail food establishment. This interim final rule defines ''retail food establishment'' as ''an establishment that sells food products directly to consumers as its primary function. A retail establishment may manufacture/process, pack, or hold food if the establishment's primary function is to sell from that establishment food that it manufactures/processes, packs, or holds directly to consumers. A retail food establishment's primary function is to sell food directly to consumers if the annual monetary value of sales of food products directly to consumers exceeds the annual monetary value of sales of food products to all other buyers. The term '' 'consumers' does not include businesses. A 'retail food establishment' includes grocery stores, convenience stores, and vending machine locations.'' This change preserves the retail

exemption both for retail food establishments (such as grocery stores) that sell or transfer some products to sources other than a consumer (*e.g.*, to other grocery stores), and for direct selling entrepreneurs, as long as their primary function is to sell directly to consumers.

FDA further agrees that under the revised definition of retail food establishment, certain warehouse clubs may be exempt from registration, if, based on dollar volume of their sales, they sell food directly to consumers as their primary function.

In addition, FDA has determined that an establishment ''attendant'' to a retail operation, if located separate from the retail food establishment, is not a retail food establishment for purposes of this rule. This is consistent with the Conference Report for the Bioterrorism Act, which states that the term ''retail'' does not include warehouses that do not sell directly to consumers as their primary function (H.R. Conf. Rep. No. 481, 107th Cong., 2d Sess., 133 (2002)).

Regarding FDA's use of the term ''commissaries'' in § 1.227(c)(11) of the proposed rule, FDA is clarifying that the term was intended to refer to establishments on military bases that sell food directly to consumers. As noted in the response to comment 74, FDA did not intend to include other types of commissaries, such as central kitchens for restaurants, within the restaurant exemption. To avoid confusion, the interim final rule deletes the word ''commissaries'' as an example of a ''retail food establishment'' because this term has multiple meanings. Regardless of what an establishment is called, it is exempt as a retail food establishment if—and only if—it meets the definition.

(Comment 77) Several commenters argue that ''direct selling'' or ''multi-level selling'' home-based distributors should be considered retail food establishments because their primary function is selling to consumers. However, because these salespeople also transfer products among themselves, they are not exempt under the proposed rule. The parent company's manufacturing and distribution facilities would be required to register. There are millions of direct selling entrepreneurs and registering them all would flood the registration system and not be meaningful. These salespeople are analogous to retail chain stores that sometimes need to transfer inventory between them.

(Response) As discussed in the response to comment 7, private residences of individuals are not facilities for purposes of this interim final rule and, therefore, are exempt from registration. Accordingly, these home-based distributors are not subject to registration.

(Comment 78) One commenter asks FDA to clarify when operations of a retail food establishment cease to be incidental to the activities of the retail food establishment and cause the retail food establishment to become a mixed-type facility that must register. This commenter asserts that activities such as operating a juice bar, repackaging nuts or dried fruits received in bulk into smaller packages, or unpacking and displaying produce are good examples of incidental activities in a retail food establishment.

(Response) The revised definition of ''retail food establishment'' clarifies that such establishments may manufacture/process, pack, or hold food so long as the establishment's primary function is to sell from that establishment food that it manufactures/processes, packs, or holds directly to consumers. As noted, a retail food establishment's primary function is to sell food directly to consumers if the annual monetary value of sales of food products directly to consumers exceeds the annual monetary value of sales of food products to all other buyers. Therefore, if the establishment's primary function is to sell food directly to consumers, repackaging nuts or dried fruit for sale directly to consumers and unpacking and displaying produce for direct sale to consumers are permissible activities. However, if an establishment's primary function is to sell food to distributors, but the establishment also conducts some minor sales directly to consumers, repackaging nuts for sale directly to these consumers does not cause the establishment to fall within the definition of ''retail food establishment.'' Examples of manufacturing/processing that a retail food establishment might perform include making potato salad for sale at the delicatessen counter of a grocery store, filleting fish at a fish market, and cutting cheese from a large block into slices for sale directly to consumers based on the amount they request. Operating a juice bar would be exempt as a ''restaurant'' because it involves preparing and selling food directly to consumers for immediate consumption.

(Comment 79) Some commenters argue that retail food establishments should include retailers of animal food. They argue that the plain text of the statute does not have a limitation on the scope of the retail food establishment exemption and that because animal food is included in the proposed rule's definition of food, the exemption should also apply to both. These commenters further argue that it would not make sense to hold animal food retailers to a standard higher than that for retailers of human food and note that pet food is offered alongside food for human consumption. Finally, these commenters assert that the failure to exempt pet food retailers would be to eliminate the benefit of the exemption for retail animal food facilities.

(Response) FDA agrees with these comments and advises that the definition of ''retail food establishment'' includes animal food retailers. FDA believes that this is consistent both with including animal feed as ''food,'' as well as with the language of the Bioterrorism Act. The agency has amended the definition of ''retail food establishment,'' however, to clarify that the term ''consumers'' does not include businesses. As a result, an establishment that sells animal food to pet owners and other individuals as its primary function is exempt as a retail food establishment. An establishment that sells animal feed to businesses, such as farms, as its primary function must register.

(Comment 80) One commenter asks FDA to clarify whether wholesale establishments are also included in the definition of ''retail food establishment.''

(Response) Wholesale facilities are not covered by the definition of ''retail food establishment'' because they do not sell food directly to consumers as their primary function.

(Comment 81) One commenter asks FDA to clarify whether retail co-ops are required to register in light of the proposed rule's statement that ''FDA is proposing to require co-op facilities that manufacture/process, pack, or hold food, and that are not subject to the farm exemption, to register with FDA.'' The commenter states that ''retail co-ops, aside from cooperative ownership, operate no differently than any other retail establishment.''

(Response) FDA agrees that a retail food establishment that is cooperatively owned is exempt from registration if it sells food directly to consumers as the co-op's primary function. The establishment's primary function must be to sell food, including that manufactured/processed at the establishment, directly to consumers.

(Comment 82) Several commenters ask whether establishments supplying food to consumers via Internet or mail-order sales are covered under the definition of ''retail food establishment.''

(Response) Facilities selling food directly to consumers via the Internet or mail-order are covered under the

definition of ''retail food establishment'' if they meet the other criteria of the ''retail food establishment'' definition. FDA notes, however, that many of these establishments may also manufacture/process, pack, or hold food that is subsequently sold to consumers. Unless the establishment's primary function is to sell food, including the food it manufactures/processes, directly to consumers, it must register with FDA.

(Comment 83) One commenter asks FDA to clarify whether warehouses that hold food for sales in U.S.-based duty-free stores are required to register. The commenter indicates that products stored in a duty-free enterprise warehouse and sold in an airport duty-free store are purchased solely by travelers departing from the United States, and therefore, are not for consumption in the United States.

(Response) FDA's understanding of duty-free shops is that purchased goods (including food) must be taken out of the United States by the traveler before such goods may be consumed or used. Thus, the agency agrees with the commenter that warehouses holding food for sale in duty-free stores are not required to register as long as the food is not for consumption or actually consumed in the United States.

In addition to the previous comments, FDA has made several editorial changes in this section for clarity.

15. U.S. Agent

(Comment 84) Some commenters claim that FDA's requirements for U.S. agents, and the responsibilities and liabilities of U.S. agents, are not clear. The commenters state that because FDA's proposed requirements are so general, it is difficult for a foreign facility to know what qualifications its U.S. agent should have.

(Response) FDA has retained the criteria for U.S. agent as proposed. As stated in the proposed rule, there are only two qualifications for a U.S. agent: The agent is required to reside or maintain a place of business in the United States and to be physically present in the United States. As far as U.S. agent liability, FDA generally does not intend to hold the U.S. agent responsible for violations of the Bioterrorism Act that are committed by the foreign facility, a position consistent with that articulated in the preamble to the agency's drugs, biologics, and device registration regulations (66 FR 59142, November 27, 2001). FDA, however, would consider legal action against a U.S. agent where the agent knowingly submitted false information to FDA or the agent and the foreign facility were effectively the same entity. Liability issues between the facility and its U.S. agent must be resolved between the private parties (*i.e.*, the facility and its U.S. agent), most likely through the terms of their contractual relationship.

(Comment 85) Some commenters ask FDA to clarify whether it will notify the U.S. agent or a facility's emergency contact in the event of a bioterrorist attack or other food-related emergency that affects a foreign facility.

(Response) Because the role of the U.S. agent is to act as a communications link between the facility and FDA, FDA will communicate with the U.S. agent in both routine and emergency situations. This means that the U.S. agent needs to be accessible to FDA 24 hours a day, 7 days a week, unless the foreign facility opts to designate a different person other than the facility's U.S. agent to serve as the facility's emergency contact by providing the information specified in § 1.233(e) in the facility's registration. If a facility's registration includes an emergency contact person provided under § 1.233(e), FDA will notify this person instead of the U.S. agent during emergencies, but will continue to use the U.S. agent for routine communications with the facility.

(Comment 86) Some commenters argue that FDA's requirement that facilities have a single U.S. agent is contrary to usual business practices. The commenters state that a facility may have several U.S. agents for different business functions, such as separate product lines or different geographic areas.

(Response) FDA believes that it would be unreasonably complex to allow facilities to have several U.S. agents for purposes of FDA registration, as FDA would then have to determine with which agent to communicate for each product line or geographic distribution area. This would likely hinder communication between FDA and the facility and thereby, thwart a chief purpose of the Bioterrorism Act—facilitating a quick and effective response to a terrorist attack or other public health emergency related to the U.S. food supply. Also, section 305 of the Bioterrorism Act is written in the singular—that is, it states that a foreign facility must include the name of its ''U.S. agent.'' Thus, allowing facilities to designate more than one U.S. agent would be inconsistent with the plain language in the Bioterrorism Act.

FDA is clarifying in § 1.227(b)(13)(iii) that having a single U.S. agent for FDA registration purposes does not preclude a facility from having multiple agents (such as foreign suppliers) for other business purposes and that FDA is not requiring that all of a firm's commercial business in the United States be conducted through the U.S. agent designated for purposes of registration.

(Comment 87) Several commenters argue that the U.S. agent requirement is onerous and potentially trade-restrictive. The commenters state that there is no requirement for a third-party go-between for domestic facilities; thus, this requirement is more restrictive on foreign facilities than on U.S. producers.

(Response) FDA believes that it has structured the U.S. agent requirement to be consistent with the statutory mandates of the Bioterrorism Act. The rule sets out only two qualifications for a U.S. agent: The agent is required to reside or maintain a place of business in the United States and to be physically present in the United States. Therefore, many foreign facilities are able to use existing contacts in the United States as their U.S. agents. Moreover, FDA has clarified in the interim final rule that the requirement of a single U.S. agent for FDA registration purposes does not preclude facilities from having multiple agents (such as foreign suppliers) for other business purposes.

(Comment 88) Some commenters argue against the U.S. agent requirement because they believe the requirement will hinder, not enhance, communication with the foreign facility.

(Response) As discussed in the preamble to the proposed rule, the purpose of the U.S. agent is to serve as a communications link between FDA and an individual facility for a number of purposes, including both emergency situations and day-to-day registration issues. These routine issues may include FDA's need for information about that facility and arranging both routine inspections and inspections or communications with the facility due to a potential bioterrorism threat or other public health emergency.

(Comment 89) Several commenters argue that FDA should allow the U.S. agent to be located outside the United States. They state that many foreign facilities do not have contacts within the United States, so it will be difficult for them to locate a U.S. agent.

(Response) Section 305 of the Bioterrorism Act (which amends the FD&C Act) states that the registration of a foreign facility ''shall include with the registration the name of the United States agent for the facility.'' Thus, requiring a foreign facility's U.S. agent to reside or maintain a place of business in this country is consistent with the plain language of the Bioterrorism Act. This approach is also consistent with FDA's implementation of the statutory requirement for drug, biologics, and device registration (21 U.S.C. 360(i)(1)),

66 FR 59138 (November 27, 2001).) It is reasonable to impute to Congress knowledge of FDA's implementation of this provision, which specifies that the ''U.S. agent'' be a person in the United States, when Congress incorporated this concept and language into the Bioterrorism Act.

(Comment 90) Several commenters ask whether a foreign government official in the United States, such as a representative from the foreign country's embassy, may act as the U.S. agent for a foreign facility.

(Response) The agency has concerns that acting as a U.S. agent may conflict with the duties of foreign government representatives. Whether it is proper for a foreign government representative to act as a U.S. agent is a fact-specific inquiry, depending on the title and status of the foreign government representative and the functions that the representative assumes as a U.S. agent. FDA believes that the propriety of a foreign government official acting as the U.S. agency of a foreign facility is a determination best made in conjunction with the State Department. If the issue arises after implementation, FDA will discuss the particular situation with the State Department.

(Comment 91) A few commenters suggest that FDA allow registrants to omit U.S. agent information if FDA uses information available from a foreign government agency.

(Response) The Bioterrorism Act requires the owner, operator, or agent in charge of a facility engaged in the manufacturing, processing, packing, or holding food—both domestic and foreign—to register the facility with FDA. The Bioterrorism Act also requires registrants of foreign facilities to provide the name of their U.S. agent. Thus, FDA is not permitted to use information maintained by foreign government agencies or other domestic Federal or State agencies in lieu of having the owner, operator, or agent-in-charge of a facility submit the information to FDA.

(Comment 92) One commenter asks whether a U.S. agent must be one individual or can it be a ''person'' consistent with the act's definition of ''person'' as an ''individual, partnership, corporation, or association.''

(Response) FDA agrees with the commenter and has clarified in the definition of ''U.S. agent'' that a foreign facility's U.S. agent can be a ''person'' as defined by the FD&C Act. This interpretation is consistent with the drug, biologics, and device registration regulations in 21 CFR 207.3(a)(11) and (b), 607.3(i) and (j), and 807.3(h) and (r).

(Comment 93) One commenter asks how FDA intends to ensure that a person identifying itself as a U.S. agent does, in fact, meet the requirements for a U.S. agent. The commenter states that some foreign facilities may use a false U.S. agent name, address, or phone number when registering. This commenter suggests that FDA confirm a registration only through a facility's designated U.S. agent, via postal mail.

(Response) FDA believes that there are several checks that will help ensure that registrations are truthful and accurate. The facility's owner, operator, or agent in charge who submits a registration must certify that the registration information is true and accurate. In addition, FDA has revised the interim final rule so that an individual (other than the owner, operator, or agent in charge of the facility) may be authorized to submit the registration on behalf of the owner, operator, or agent. An individual (other than a facility's owner, operator, or agent in charge) who submits the registration form to the FDA must certify that he/she is authorized to submit the registration on the facility's behalf and must identify by name the individual who authorized submission of the registration. The certification statement also states that anyone who makes a materially false, fictitious, or fraudulent statement to the U.S. Government is subject to criminal penalties under 18 U.S.C. 1001. As an additional means to verify the identity of the person submitting the registration, the interim final rule requires that for the paper and CD–ROM registration options, the registration include the signature of the person submitting the registration. FDA believes that the combination of the signed certification statement and federal criminal liability will be a powerful incentive for truthful registrations. Further, because the Bioterrorism Act provides that an owner, operator, or agent in charge is responsible for registering a facility, it would be improper for FDA to confirm that registration only through a facility's U.S. agent if the U.S. agent did not originally submit the registration.

In addition to the changes noted previously, FDA has made several editorial changes to this section on its own initiative.

16. Other Definitions Included in the Interim Final Rule

(Comment 94) One commenter requests that FDA define ''trade names'' in the interim final rule. This commenter states that the term ''trade names'' is mentioned in both the Bioterrorism Act and the proposed rule several times, yet is not defined. The commenter requests that ''trade names'' be defined, ''to ensure that the scope of registration reflect[s] the intent and objectives of the statute.'' The commenter suggests that ''trade names'' be defined as ''the terms relating to the business activity of the facility that denote the names under which the facility conducts business or additional names by which the facility is known.'' The commenter also requests that FDA clarify that ''trade names'' ''denote terminology associated with the business of the facility, and does not necessarily signify a brand name, which is terminology associated with a product.'' The commenter provides some examples of trade names, such as: ''Facility name: Jones Foods Corporation; Trade Names: doing business as Joe Jones Fruit Processors, doing business as Jones Family Pie Company.''

(Response) FDA agrees with the comment, and has added the following definition for ''trade names'' to the interim final rule (§ 1.227(b)(12)): ''*Trade name* means the name or names under which the facility conducts business, or additional names by which the facility is known. A trade name is associated with a facility, and a brand name is associated with a product.''

(Comment 95) Several commenters request that FDA clarify who is required to register if a facility has multiple individuals who may qualify as the owner, operator, or agent in charge.

(Response) The Bioterrorism Act and the interim final rule place the responsibility for registering a facility on the owner, operator, and agent in charge of the facility. If a facility has multiple owners, operators, or agents-in-charge, all are collectively responsible for registering the facility and any one of these individuals may register the facility, or as noted in the response to comment 93, authorize an individual to submit the registration for the facility. Although these persons may decide themselves how, as a practical matter, their facility will be registered, the existence of multiple owners, operators, or agents in charge does not affect the legal obligation each has under the rule to register relevant facilities.

(Comment 96) One commenter states that although FDA uses the terms ''owner,'' ''operator,'' or ''agent in charge'' throughout the proposed rule and the draft registration form, in section 1b (Update of Registration Information) and section 12 (Certification Statement) but these terms are not defined. The commenter also states that although FDA requests changes to the ''owner, operator, or agent in charge'' in section 1b of the

registration form, FDA ''does not ask for specific information for the owner, operator, or agent in charge elsewhere in the form.'' The commenter states that it assumes FDA interprets the owner, operator, or agent in charge of the facility ''as the facility itself (and not an individual) for which specific information is requested in section 2 of the form'' (facility name/address information). The commenter continues that ''[o]nce the owner, operator, or agent in charge of the facility has authorized an individual to submit the registration form, that individual becomes synonymous with the 'owner, operator, or agent in charge.' '' The commenter states that if these assumptions are correct, the last box under section 1b should be revised from ''Owner, Operator, or Agent in Charge Change'' to ''Authorized Submitter [Change].''

The commenter also requests that section 12 be revised from its current statement ''[t]he owner, operator, or agent in charge of the facility must submit this form. By submitting this form to FDA, the owner, operator, or agent in charge certifies that the above information is true and accurate and that the facility has authorized the submitter to register on its behalf.'' The commenter's suggested revised statement is as follows: ''[t]he owner, operator, or agent in charge of the facility must submit this form. By submitting this form to FDA, the owner, operator, or agent in charge of the facility certifies that the above information is true and accurate and that the *submitter has been authorized* to register on its behalf'' (suggested changes in italic).

(Response) These comments (and others) suggest that certain provisions of the proposed rule and proposed Form 3537 may have been ambiguous or otherwise created confusion about who should complete and submit a registration. As discussed below and elsewhere in this preamble, FDA has clarified several provisions in the interim final rule and has revised Form 3537 as well. The agency believes that these clarifications and revisions generally respond to the foregoing comments. FDA's more specific responses to these comments are set out below.

Regarding the commenter's request that FDA define ''owner,'' ''operator,'' or ''agent in charge,'' FDA does not believe that it is necessary to define these terms because the terms are self-explanatory. Accordingly, the interim final rule does not include a definition for owner, for operator, or for agent in charge.

FDA acknowledges that the provision in the proposal regarding the certification statement was unclear due the language in proposed § 1.232(g) stating that ''the person submitting the registration [must be] authorized by the facility to register on its behalf.'' This created ambiguity for three reasons. First, the use of ''person'' created ambiguity as to whether only an individual could submit the registration because ''person,'' as defined in section 201(e) of the act, includes an individual, partnership, corporation, and association. However, as evidenced by the proposed certification requirement that the name of the person submitting the registration be specified, FDA intended to convey that an individual rather than a ''person'' must submit the registration. Second, the statement that a person submitting a registration must have been authorized by the facility is inconsistent with the certification statement in the proposed rule, which stated that ''the owner, operator, or agent in charge of the facility must submit this form.'' Third, the former statement was confusing because a facility itself cannot authorize an individual to register.

The interim final rule resolves these inconsistencies by clarifying who may register a facility. Although the Bioterrorism Act imposes the legal obligation to register on the owner, operator, and agent in charge of a facility, FDA believes that this provision does not prevent the owner, operator, or agent in charge of a facility from authorizing an individual to fill out, sign, and submit the registration. Accordingly, the interim final rule provides that the owner, operator, or agent in charge may authorize an individual to submit the facility's registration.

In addition, for clarification and for the reasons discussed in the responses to comment 110, in the interim final rule, § 1.232(i) has been added to provide that if the individual submitting the form is an individual authorized to do so by an owner, operator, or agent in charge, the individual must also certify that the individual is authorized to submit the registration form on behalf of the owner, operator, or agent in charge and must identify by name the authorizing individual. This statement must include the individual submitter's signature (for paper and CD–ROM options) and printed name. If the individual submitter is authorized by someone other than the owner, operator, or agent in charge, the authorizing individual's name, address, and phone number must be included; the fax number and e-mail address of the authorizing individual are optional.

FDA does not agree with the commenter's assumption that if a facility authorizes an individual to submit a registration, the individual then becomes synonymous with the owner, operator, or agent in charge. Although the interim final rule permits an owner, operator, or agent in charge to authorize an individual to submit the registration on its behalf, that individual does not become the owner, operator, or agent in charge for purposes of registration or otherwise alter the legal obligation of the owner, operator, or agent in charge to register. Therefore, we have not revised section 1b as requested by the commenter.

FDA does not fully understand the import of the comment that the agency considers that owner, operator, and agent in charge to be the ''facility itself.'' In some cases, the owner of the facility may be the same as the facility (*e.g.*, a corporation) while in other instances, the two may be different. The revised Form 3537 reflects these two possibilities in that it requests information about the facility (Section 2, facility name and address) and the owner, operator, or agent in charge (Section 12, owner, operator, or agent in charge address and telephone number.) Form 3537 also recognizes that information in section 12 may overlap with that requested in section 2.

F. Comments on ''When Must You Register?'' (Proposed § 1.230)

(Comment 97) One commenter states that FDA's language in proposed § 1.230 (''[t]he owner, operator, or agent in charge of a facility that manufactures/processes, holds, or packs food for consumption in the United States must be registered no later than December 12, 2003'') is contrary to the Bioterrorism Act, which requires registration by facility, as opposed to by owner, operator, or agent in charge. The commenter also states that language in proposed §§ 1.225 and 1.226 might be interpreted to mean that the owner, operator, or agent in charge is the entity to be registered, not the facility.

(Response) FDA intends to require that the facility be registered, not the owner, operator, or agent in charge of the facility. In response to these comments, FDA has revised the following language: In § 1.225, FDA has added the italicized language to paragraph (a): ''You must register *your facility* under this subpart if you are the owner, operator, or agent-in-charge of either a domestic or foreign facility * * *''. The agency also has added the italicized language to paragraph (b): *''If*

are an owner, operator, or agent in charge of a domestic facility * * *, *you* must register *the facility* * * *.''

FDA believes no revisions are needed to § 1.226, because it is clear in this section that the exemptions apply to facilities, not the owner, operator, or agent-in-charge of the facilities.

In § 1.230, FDA has made the following change indicated by the italicized language: ''[t]he owner, operator, or agent in charge of a facility that manufactures/processes, packs, or holds food for consumption in the United States must *register the facility* no later than December 12, 2003.''

In § 1.233, in the first paragraph, FDA has made the following change indicated by the italicized language: ''FDA encourages, but does not require, you to submit the following items in your *facility's* registration.''

(Comment 98) Several commenters submitted comments regarding when to register. Some of these commenters request general information about when they will be able to register with FDA. Others acknowledge the proposed timeframe in which FDA expects to publish the final rule; these commenters question why they cannot register, either electronically or by mail, before publication of the interim final rule. Some commenters ask that FDA publish a final rule and implement its electronic registration system before October 12, 2003. Some commenters suggest that, to alleviate the burden on FDA's electronic system, FDA should either accept staggered registrations based on such identifiers as last name of the facility, or that FDA should only require registration 15 days before a facility's intended date of a food shipment to the United States. One commenter requests that FDA ensure that the final regulation and electronic system are in place by October 12, 2003.

(Response) FDA understands that many commenters may view the proposed 8-week timeframe for facilities to register as too brief. However, this timeframe is limited due in large part to the restrictions imposed by the Bioterrorism Act, which requires FDA to develop both proposed and final regulations detailing the process by which facilities must register by December 12, 2003. Within this timeframe, FDA has also had to develop an electronic system that can implement the requirements of this regulation. FDA has expedited the process for developing and completing the proposed and interim final regulations, as well as the electronic registration system. It is not possible for FDA to complete a final rule in less than 16 months from enactment of the Bioterrorism Act, or before October, 2003. Moreover, because this interim final rule articulates the final requirements for registration, which FDA must incorporate into its electronic registration system, FDA could not allow registration in advance of publication of the interim final rule, either electronically or by mail. FDA also believes the time period for registration is reasonable. Because both the proposed rule and this interim final rule have alerted facilities to the general requirements of registration, facilities have had ample time to prepare for registration pending the issuance of the interim final rule.

(Comment 99) Some commenters argue that FDA should provide a 3 to 6-month grace period after December 12, 2003, in which it will accept late registrations without penalizing the facilities that submit these late registrations. These commenters state that they are concerned that FDA will not be able to accommodate the large number of electronic registrations that must be submitted within this 8-week timeframe, and that this breakdown could cause large monetary losses to industry.

(Response) The Bioterrorism Act provides that the effective date for registration is December 12, 2003. The statute further specifies that, after this date, food imported or offered for import from unregistered facilities must be held at the port until the facility is registered (21 U.S.C. 381(l)). FDA has designed its electronic system to be robust enough to handle the large volume of registrations anticipated during this 8-week period. However, the planned capacity will not be sufficient to process all of the registrations in 1 day; thus, if all registrants wait until the last day to register (*i.e.*, December 12, 2003), the system's capacity could be exceeded. Therefore, FDA encourages facilities to register early.

(Comment 100) Some commenters indicate that the 8-week timeframe does not allow paper registrations as a real alternative to electronic registrations, because FDA states in the proposed rule that registration by mail could take several weeks to several months. This timeframe could render a facility out of compliance with the effective date for registration, because even if a facility were to mail its registration to FDA soon after October 10, FDA might not return the registration number to the facility until after December 12.

(Response) The paper processing facility will be able to electronically process over 1,800 Form 3537 submissions each business day during the regulatory peak processing period of October 16, 2003, through December 12, 2003 (41 business day period). This will result in a total of 73,800 submissions processed in a 41 business day period. All Form 3537 submissions will be processed in the order they are received and will be turned around within a 24-hour period, if the registration form is error free. Submitters should expect to receive their registration number within 5 to 7 days after processing depending on postal mailing delays if the number of submissions does not exceed the processing capacity.

If the registration submissions should exceed the daily 1,800 Form 3537 processing capacity, a backlog will develop. FDA expects that if backlogs occur, they are most likely near the end of the initial 41 business day registration period. If our estimates are correct, FDA would expect a backlog of 2 to 3 weeks. However, if the number of submissions and rejections being resubmitted exceed our estimates, the backlogs will be longer. So including the mailing time, the backlog, and processing times, the delay toward the end of the initial registration period could be 3 to 6 weeks or longer if the number of submissions exceeds our estimates.

If a submission has been rejected due to error the submitter made or failed mandatory validation, the submission will be returned to the submitter via postal mail. Depending on mailing delays, the submitter should expect to receive the rejected submission with a letter explaining the rejection within 5 to 7 days plus the time the submission spent in the processing backlog (0 to 3 weeks). After the submitter corrects their registration and resubmits it to FDA via postal mail, the corrected registration will be processed in the order received along with all other submissions and is subject to all of the delays identified previously.

For the CD–ROM option, submitters are allowed to store a fill-in PDF Form 3537 for each facility onto a CD as a separate file. FDA will process the CD–ROM submission, presumably containing multiple registrations, electronically as part of the paper process. This means the PDFs on the CD–ROM will not be printed out and then keyed in because they are already in the format that the paper process system needs. The PDF files will be fed into the paper process queue in their order of arrival as though they were a normal paper form. Each file on the CD will go through the same validation checks as if it were a normal paper submission. If the registration file on the CD–ROM is processed successfully, the registration will be returned by postal

mail with a registration number. If the registration fails validation checks or contains errors, the registration will be returned with a letter explaining why registration was not successful and will need to be resubmitted in order to complete registration.

The only way for a registrant to ensure a fast response to a registration is to register the facility electronically on the Internet.

(Comment 101) One commenter states that FDA does not mention the registration requirements for facilities that form after December 12, 2003.

(Response) Section 1.230 of the interim final rule states ''* * * a facility that begins to manufacture/process, pack, or hold food for consumption in the United States on or after December 12, 2003, must be registered before the facility begins such activities.''

FDA has made a small editorial change to this section for clarity.

G. Comments on ''How and Where Do You Register?'' (Proposed § 1.231)

(Comment 102) Several commenters ask FDA to explain how they should register their facilities with FDA.

(Response) As stated in § 1.231, those wishing to register a facility electronically must access *http://www.fda/furls* and follow the directions on that Web site for registering. This Web site will be available starting on October 16, 2003, at 6:00 p.m. eastern daylight time. Registrants needing technical assistance with the paper or electronic registration forms can call 1–800–216–7331 or 301–575–0156, or can fax their questions to 301–210–0247 or e-mail them to *furls@fda.gov.* Starting on October 16, 2003, these phone numbers will be staffed on business days from 7 a.m. until 11 p.m. eastern standard time.

FDA had anticipated having the electronic and paper systems operational on the date of this interim final rule's publication. However, given the fluid and dynamic nature of developing the electronic system in parallel with finalizing the regulation that determines the requirements for the system and given the short deadline imposed by the statute, much of the development and testing effort of the system had to occur in the last 2 months. Accordingly, for much of these 2 months, work on the system has been taking place 7 days a week. Moreover, hurricane Isabel caused significant delays in the work for the week of Thursday, September 18. Due to these delays, FDA determined that if it postponed the launching of the system until Thursday, October 16, there would be a much higher level of assurance that those persons registering food facilities electronically would be able to do so effectively and efficiently without user frustration or confusion. FDA believes that the slight delay of the system will not affect stakeholders substantially, as potential registrants will need several days to become familiar with the rule and its requirements.

Therefore, beginning on October 16, 2003, the Web site will be available 24 hours a day, 7 days a week, from wherever the Internet is accessible, including libraries, copy centers, schools, and Internet cafes. In addition, as noted previously, the owner, operator, or agent of a foreign facility may authorize an individual to register the facility; the owner, operator, or agent in charge may chose to authorize an individual who has access to the Internet. In addition, the Bioterrorism Act requires a foreign facility to designate a U.S. agent. That agent (if an individual) could be authorized by the owner, operator, or agent in charge of a foreign facility to register that facility. If the U.S. agent does not have Internet access onsite, the U.S. agent may register the facility electronically from a local library or other public facility that offers Internet access either free of charge or for a relatively small fee. Thus, all foreign facilities will be able to receive an electronic confirmation of registration and the facility's registration number, as will domestic facilities that register electronically.

FDA strongly encourages electronic registration for the benefit of both FDA and the registrant. FDA will be able to accept electronic registrations from anywhere in the world where the Internet is available 24 hours a day, 7 days a week. Electronic registration also will enable a facility to be registered more quickly than if registering by mail, because obtaining confirmation of registration and the facility's registration number online should be instantaneous once a facility fills in all required fields on the electronic registration form.

As stated in § 1.231(b), a registrant may also register by fax or mail (for example, if none of the means of electronic access mentioned previously are reasonably available). Processing of fax or mail (including CD–ROM) registrations will also begin on October 16, 2003. In registering by mail or fax, a registrant also may fill out one or more forms on behalf of one or more facilities. A registrant registering by mail must call FDA at 1–877–FDA–3882 (1–877–332–3882) to request a copy of the form, or send FDA a written request for the form at U.S. Food and Drug Administration (HFS–681), 5600 Fishers Lane, Rockville, MD 20857. Once the registrant receives the mailed or faxed copy of the form, the form must be filled out completely and legibly, and either mailed back to FDA at the same address, or faxed back to FDA at 301–210–0247. FDA will process the registration forms in the order received. An agency employee will check to make sure all mandatory fields are filled out completely and legibly. If the form is not complete or is illegible, it will be returned to the registrant for completion, provided that the registrant's mailing address is legible and valid. If the form is complete and legible, FDA will manually enter the data on the form into the system as soon as practicable, which will depend on the number of other registration forms awaiting manual entry into the system. FDA will then mail or fax to the registrant a copy of the registration as entered, confirmation of the registration, and the facility's registration number. When responding to a registration submission, FDA will use the means by which the form was received by the agency (*i.e.*, by mail or by fax). If the copy of the registration form mailed or faxed back to the registrant contains incorrect information, the registrant must update the incorrect information under § 1.234. Registration by CD–ROM, which is also permitted by the interim final rule, is discussed in the response to comment 103.

(Comment 103) Several commenters request that FDA accept batched multiple facility registrations via CD or XML format instead of registering one facility at a time through the online system.

(Response) Due to the stringent timeframe that FDA had to develop proposed and interim final regulations and in which to finalize the electronic registration system, FDA is unable to accept multiple registrations in XML format because it would take substantial additional time and money for FDA to develop the compatibility necessary to accept registrations in this format. However, FDA will accept multiple submissions in CD–ROM format ISO 9660 (CD–R or CD–RW) Data format. These registrations must be submitted on FDA's fill-in Portable Document Format (PDF) rendition of the appropriate form (Form 3537) accompanied by one signed copy of the certification statement on the registration form. Each submission on the CD–ROM must use the same preferred mailing address in the appropriate block on Form 3537. The CD–ROM can contain as many submissions as needed up to its capacity (650–700 megabytes (MB) or about 1,300 submissions per CD–ROM). Importantly,

however, each submission must have a unique file name up to 32 characters long, the first part of which may be used to identify the parent company. If FDA receives a CD–ROM that does not comply with these specifications, it will send the CD–ROM back to the registrant unprocessed.

FDA notes that CD–ROM submissions are similar to submissions by mail or fax in terms of how they are processed. FDA will process these CD–ROM submissions along with the mailed and faxed submissions, in the order received. Therefore, registrants wanting to ensure that they receive their registration numbers quickly may wish to register electronically, as described previously. The principal advantage CD–ROMs offer over paper submissions is for firms that own many facilities and do not have reasonable access to the Internet. Using a CD–ROM to submit PDF typed registrations should increase legibility and save on mailing expenses. FDA reiterates, however, that submission by CD–ROM will be slower than submitting registrations electronically.

(Comment 104) Several commenters request that FDA's electronic system provide a way in which a single registrant entering data for many facilities can stop entering data on one day and resume from where they left off on another day.

(Response) FDA's electronic system will save registration data automatically with the completion of the entry of all data for a facility. Thus, it will be possible to stop entering data upon completion of the entry for one facility, and resume entering data for a subsequent facility on another day without loss of any previously entered data that would be applicable to both facilities, such as the name and address of the owner. The information needed for a registration is identified on the electronic registration form. A registrant will know what information is required for the registration before beginning to enter registration data into the system. Once a registrant has all of the required information, the time to register each subsequent facility should decrease, depending on how much of the information can be autofilled from the account information from previous registrations. However, the FDA electronic system does not allow a registrant to save data in the middle of registering a facility. Therefore, FDA suggests that registrants completely finish registering a particular facility before ending an online session.

(Comment 105) Some commenters ask whether the electronic system will allow multiple individuals from the same company to enter registration information simultaneously.

(Response) The FDA electronic registration system is set up to allow a company to establish an enterprise (master) account and multiple subaccounts to allow several persons within a company to enter registrations simultaneously. The enterprise account can be used to enter facility registrations and it also can be used to establish and manage subaccounts. The subaccounts can only enter facility registrations, and unlike the enterprise account, they do not have access to other subaccounts. Generally, the enterprise account has access to all information entered via the subaccounts, unless, when created, the subaccount stipulates that the enterprise account is not to have access to that subaccount.

(Comment 106) Some commenters ask whether the electronic registration system will minimize the reporting burden. These commenters are concerned that the lack of detail FDA has provided regarding the Internet-based electronic registration system has made it difficult for them to evaluate the reporting burden.

(Response) FDA is working expeditiously to ensure that that there will be a minimal reporting burden associated with registration in general, and electronic registration in particular. Registering electronically will be a relatively fast process once the registrant has all of the pertinent information available. Once the facility is registered electronically, its registration number should be provided automatically and instantaneously. FDA has received very positive comments at the several public demonstrations of the prototype of FDA's electronic registration system. Throughout the next couple of months, FDA will continue to conduct outreach activities to both foreign and domestic registrants to explain how the electronic registration system works to expedite registration.

(Comment 107) Some commenters express concern about the security of the electronic system. They state that the registration number alone should not be sufficient to access a facility's registration form in an electronic environment, because registration numbers will be required for prior notice of imports, and thus, are likely to be part of the commercial documentation between parties. These commenters emphasize that FDA must have procedures in place to ensure that only authorized persons can access and change a facility's registration information.

(Response) FDA has taken comprehensive steps to ensure that our electronic registration system is secure. A risk assessment has been done and a formal security plan has been incorporated into the system that addresses both physical and electronic security. The system has undergone an independent security review and assessment as well as complete industry standard certification and accreditation. The system securely communicates with registrants using industry standard, secure socket layer with 128-bit encryption.

A facility's registration number alone is not sufficient to access a registration. To increase security, FDA has provided several layers of controls in the electronic access to registrations, thus preventing unauthorized access. First, an account ID and password must be established. Second, each registration has a unique registration number and PIN (Personal Identification Number), both of which are required to gain access to the registration and are only provided to the registrant. Only the registration number is disclosed as part of the prior notice of an imported food shipment. Thus, to prevent unauthorized access to a facility's registration, it is the responsibility of persons registering to secure their account IDs, passwords, and PINs.

(Comment 108) Some commenters request that the electronic system be available in every world language. Others ask whether shipments will be delayed if issues arise from translation discrepancies between a facility's registration in the English translation of its name and its prior notification with elements in the foreign language.

(Response) In response to the first part of the comment, FDA has determined that registration instructions will be provided in three languages: French, Spanish, and English. As noted, these are the three official languages of the WTO.

In response to the second part of the comment, FDA has determined that all registration information submitted must be in English. However, a person's name, the name of a company, the name of a street, or a trade name may be submitted in a language other than English. All information, including these items, must be submitted using the Latin (Roman) alphabet. These exceptions will ensure that inconsistencies will not arise between a facility's registration and prior notice.

Submissions must be in English (with the exceptions noted) so that FDA can understand the content of the registration, ensure that the registration information is correct, and have a database of facilities that its staff can readily access in the event of a

threatened or actual food-related emergency. To assist registrants who do not speak English, FDA has given a foreign facility the option of authorizing an individual (including its U.S. agent if an individual) to register on its behalf.

(Comment 109) Some commenters question whether there will be a contingency plan if the electronic registration system is not as efficient as expected or if more facilities register than anticipated. Some of these commenters question whether the paper system will be able to handle the 8-week registration period.

(Response) The electronic system is designed to handle anticipated peak loads. The paper-based system is being designed to handle the 8-week registration period; however, depending on the number of paper registrations received, and depending on when FDA receives the registrations within this 8-week period, FDA may be unable to process all paper registrations, confirm the registration, and provide a registration number to each registrant within the 8-week period. For this reason, FDA strongly encourages all facilities to register electronically to ensure they are registered on time.

(Comment 110) Some commenters ask whether trade associations, commodity groups, or parent companies can register on behalf of facilities represented by their organizations.

(Response) As stated in the response to comment 96, we have revised § 1.232(i) and the certification statement on Form 3537 to permit an authorized individual to submit the registration. Thus, a trade association or commodity group cannot submit a registration because these entities are not individuals. However, the owner, operator, or agent in charge can authorize an individual from such a group to submit the registration. We note that the definition of U.S. agent provides that a U.S. agent may be a ''person'' as defined in section 201(e) of the FD&C Act. Therefore, a foreign facility could designate a trade association or commodity group as the facility's U.S. agent. However, if the U.S. trade association or commodity group agrees to serve as the U.S. agent and the facility authorizes the U.S. agent as the foreign facility's agent in charge for registration, an authorized individual from that association or group must submit the registration. In addition, the interim final rule allows a parent corporation to register on behalf of one or more of its facilities.

(Comment 111) One commenter asks whether FDA can build on the Operational and Administrative System for Import Support (OASIS) that FDA currently has to accept registrations. The commenter states that some prospective registrants already provide information regarding ''shipper'' and ''manufacturer'' to FDA via OASIS, and that building a new registration system would cause redundancy for these registrants.

(Response) Although FDA intends to use OASIS for cross-checking registration information, both the required data elements and the universe of facilities required to register are markedly different from those entered into OASIS. Moreover, OASIS does not have the capacity to accept all the registration information from all the facilities required to register with FDA. Thus, FDA has developed a new system for registration that will interface with OASIS.

(Comment 112) One commenter asks whether FDA will accept photocopied versions of the mailed registration form.

(Response) FDA will accept a photocopy of a mailed registration form or the certification statement submitted with a CD–ROM submission, as long as the signature on each individual form is an original signature. We recognize that for multiple facility registrations, photocopying data elements that are common to each facility will reduce the burden on the registrants in completing the forms. While those common data elements may appear as photocopies, the forms must include an original signature.

(Comment 113) One commenter asks how the electronic registration form will allow registrants to proceed through the registration process. For example, if each a registrant must answer each section to proceed to the next section, how will the system address optional information?

(Response) FDA has designed both its electronic and paper registrations to specify which sections are mandatory. The electronic registration system has been designed to highlight or mark a required field that a registrant has left blank so that the submitter must fill it in before proceeding further with the electronic registration process.

(Comment 114) One commenter expresses concern that a registration may get lost in ''cyberspace,'' even though it has been correctly filled out and the facility has received a registration number.

(Response) The system saves all submitted information before issuing a registration number. A submitter would only receive a registration number upon a successful registration; if the registration failed, a facility would not receive a registration number. The Web system is a real time system with tape backups of the data entered. Additionally, the system has battery backups in the unlikely event of a power loss.

In addition to the changes noted previously, on its own initiative FDA has made several editorial changes to this section for clarity.

H. Comments on ''What Information Is Required in the Registration?'' (Proposed § 1.232)

1. General Comments

(Comment 115) Several commenters believe FDA should make the registration process as simple as possible, limiting required information to name, address, and trade names. These commenters state that the scope, exemptions, definitions, and required information in the proposed rule erode simplicity to the point that exemptions are voided, and would require registrations from a vast array of small facilities.

(Response) The Bioterrorism Act requires that a registration contain each facility's name, address, and all trade names under which the registrant does business (21 U.S.C. 350d(a)(2)). That statute provides no exemption from registration for small-size facilities. FDA believes that the information required for registration is necessary to assist FDA in notifying facilities of a threatened or actual bioterrorist attack or other food-related emergency. Together with the other regulations FDA is developing to implement the Bioterrorism Act, the information in the registration will assist FDA in determining the source and cause of such an event.

Regarding the comment that the scope, definitions, exemptions, and required information are unduly complicated, no comments FDA received in response to the proposed rule argue that the interim final rule should not include any definitions, exemptions, or specify the information to be included in a registration. FDA has made every effort to define clearly which facilities are required to register to ensure that potential registrants will know whether they are subject to the rule. FDA also has provided definitions for each exemption provided in the Bioterrorism Act. Moreover, FDA believes that the registration process itself is as uncomplicated and user-friendly as possible. A facility registering electronically should be able to complete the registration and receive its registration number expeditiously once it has gathered all the requisite information.

(Comment 116) Several commenters state that the information in the registration goes beyond the information required by the Bioterrorism Act, thereby exceeding FDA's statutory authority. One of these commenters states that ''there are no references, either in the Bioterrorism Act or the legislative history, to the inclusion of individual names in the registration.''

(Response) As noted in section I of this document, in issuing this interim final rule, FDA is relying on the authority in section 305 of the Bioterrorism Act, as well as section 701(a) and (b) of the FD&C Act. Including information regarding both the facility's parent company and the emergency contact will facilitate the efficient enforcement of the act by enhancing FDA's ability to deter and respond quickly to a food-related emergency. Accordingly, the provisions of this interim final rule are consistent with FDA's statutory authority provided by the Bioterrorism Act and the FD&C Act.

The only required elements of the registration that the Bioterrorism Act does not specifically mention are the facility's parent company name, address, and phone number, and emergency contact information. Regarding the emergency contact information, the information will make it possible for FDA to respond quickly to emergencies that occur during nonworking hours by contacting facilities when an emergency occurs.

FDA is also requiring the parent company information for emergency situations. If an emergency occurs with respect to a particular facility or group of facilities, FDA will need to alert the parent company, as well as the affected facilities, because the parent company has ultimate responsibility for the facility. Moreover, in terms of inspections, the relationship between a facility and its parent company is vital for FDA in tracking and investigating incidents.

With regard to that portion of the comment asserting the Bioterrorism Act does not refer to individual names, the interim final rule does not require the submission of an individual's name except for the name of the authorized individual submitting the registration and, if the submitter is authorized by another individual, the name of the authorizing individual. Of course, if the owner, operator, agent in charge, or U.S. agent is an individual, the name of that individual must be submitted. If the emergency contact for a facility is an individual, that name must be submitted as well. However, as stated in responses to comments 124 and 137, the interim final rule does not require an individual to be designated as the U.S. agent or an emergency contact.

(Comment 117) One commenter believes that, contrary to FDA's proposed use of the registration information to determine the source and cause of a bioterrorist event, the proposed requirements are geared to locating and contacting facilities that through some other means have already been associated with the event, thus facilitating further investigation.

(Response) FDA believes that registration both will help the agency contact facilities that already have been the target of an event, and will assist the agency in determining the source and cause of the event. First, registration will provide FDA with a more complete and up-to-date database of facilities to contact if the agency learns of an actual or potential threat to the food supply. The specific registration information, such as food product categories and geographic location, will enable FDA to narrow down the facilities that may be affected by a bioterrorist attack or other food-related emergency, thus saving precious time. Second, registration will assist FDA's implementation of the other regulations and guidance documents that FDA is developing to implement the Bioterrorism Act, namely prior notice, recordkeeping, records access guidance, and detention. Registration, prior notice, and recordkeeping enable FDA either to obtain information it does not currently have, or to obtain that information more quickly than FDA was able to do prior to the enactment of the Bioterrorism Act. This information gives FDA crucial tools to protect the U.S. food supply. For example, registration will enable FDA to fill in incomplete information for certain facilities derived through records about a source of a bioterrorist attack or other food related emergency, thus facilitating a traceback. In this example, registration information would also allow FDA to contact some facilities quickly during a traceback investigation.

(Comment 118) One commenter requests that FDA consider registrations submitted more than once on behalf of a particular facility as valid, since some foreign companies may register multiple times both at the facility and corporate levels.

(Response) Once a facility is registered with FDA, the electronic system will reject any additional registrations that are submitted on behalf of the same facility. To have the system do otherwise does not make sense, because each facility must only register with FDA once and will only be assigned one unique registration number. Accepting multiple registrations would also create confusion in FDA's database of registered facilities, because FDA would not know who to contact in the event of an emergency if there is different emergency contact information in the registrations for the same facility. Once a facility is registered, FDA will send a confirmation to the facility by e-mail, mail, or fax, depending on how the facility registered. Thus, personnel at the facility will be aware that the facility is registered.

(Comment 119) A commenter requests that FDA clarify whether it requires a registrant to specify container/package size in its registration. The commenter states that such a requirement would be very time-consuming and introduce prohibitive costs both financially and in terms of resources. The commenter further states that this potentially could necessitate numerous and frequent updates to registration information.

(Response) Neither the proposed rule nor the interim final rule requires registrants to specify container or package sizes in its registration.

(Comment 120) One trade association believes that FDA should provide ''full translation services for non-English speakers and the disabled as required under the Americans with Disabilities Act (ADA).''

(Response) Regarding translation services for non-English speakers, this comment is not clear about whether it is requesting these services for the registration itself, or for outreach activities related to registration. FDA intends to translate all outreach-related slide presentations and downlink transcripts for the interim final rule into French and Spanish, similar to what FDA did for the outreach for the proposed rule. As noted previously, FDA will require the registration to be submitted in English. The owner, operator, or agent in charge of a foreign facility that requires translation services may wish to authorize an English-speaking individual to register on its behalf.

FDA is in full compliance with section 508 of the Rehabilitation Act and provides an ''Accessibility Statement'' for disabled persons on its Web site. FDA cannot identify from this comment if other ''translation services'' are being requested for the disabled.

2. Name, Full Address, Phone Number, Fax Number, and E-mail Address

(Comment 121) Several commenters object to FDA's requirement that a registration include the facility's phone number, fax number, and e-mail

address. These commenters state that the e-mail address of the facility is not likely to be that of an individual person, but one for the facility as a whole and is usually staffed by a facility's most junior employee, who would not be the appropriate person for FDA to contact in the case of a bioterrorism incident or other food-related emergency. The commenters also state that FDA will have the phone number and e-mail address of the emergency contact, so it should not be necessary also to require the phone number and e-mail address of the facility as a whole. Regarding the fax number, some commenters argue that they might not have fax machines. Therefore, these commenters request that FDA make the facility fax number and e-mail optional elements of registration.

(Response) FDA agrees with the commenter that a facility's fax number should be optional and that a facility's e-mail address also should be optional unless the facility registers electronically and provides an e-mail address for confirmation. Section two of the proposed registration form states that the registrant is required to provide its fax number and e-mail address ''if available.'' However, to clarify in the rule that this information is optional, FDA has moved these registration elements to the section in the interim final rule entitled ''What optional items are included in the registration form?'' (§ 1.233). FDA has decided to retain the requirement that a facility's phone number be provided because having that number will facilitate routine communications with the facility. For domestic facilities, the emergency contact information will only be used in the event of an actual or potential emergency; the facility phone number will be used for all other communications (*e.g.*, to schedule an inspection), unless the registration provides other contact information in the ''Preferred Mailing Address'' section of the form. For foreign facilities, the U.S. agent's information will be used for both routine and emergency contacts, unless the facility chooses to provide a different emergency contact. FDA, however, believes it is important to have a contact phone number for a foreign facility itself, in case FDA cannot contact the U.S. agent.

(Comment 122) Several commenters state that the fields in section 2 of the proposed registration form for facility name and address correspond to addresses in the United States, such as ''zip code,'' and do not take into account address formats used in foreign countries. For example, in many Latin American countries, addresses are not necessarily denoted by a street number and name, but may be identified by a crossing of streets or even by specific reference points that may involve other buildings or landmarks.

(Response) In the electronic registration, FDA intends to provide flexibility to enable a foreign facility to include its street address information in the format used in the foreign country. Regarding ''zip codes,'' in the proposed registration form, FDA's electronic system is designed to request zip code information only for facilities located in the United States, and the postal code for countries that have postal codes. For identification of a country, the electronic system employs a pull-down menu that lists countries' two letter abbreviations as listed in the International Standards Organization 3166. The printed registration will also provide enough space for a registrant to enter the facility's address information in whatever format is used in its own country.

3. Name and Address of the Parent Company

(Comment 123) Several commenters believe that name and address of the parent company should not be required. Another commenter states that it does not object to this requirement.

(Response) The interim final rule retains the requirement that parent company information be provided in a registration if applicable. The parent company information enables FDA to ascertain the relationship between a facility and its parent company, if the facility is a subsidiary of the parent company, because not infrequently, a facility or subsidiary may have a different name than its parent company. FDA is also requiring the parent company information for emergency situations. If an emergency occurs with respect to a particular facility or group of facilities, FDA will need to alert the parent company, as well as the affected facilities, because the parent company has ultimate responsibility for the facility. Moreover, in terms of inspections, the relationship between a facility and its parent company is vital for FDA in tracking and investigating incidents.

4. Emergency Contact Information

(Comment 124) Several commenters believe that FDA should give facilities or their parent companies the option of identifying relevant emergency contact information (phone number, whether cell or land line, e-mail address) without necessarily identifying a specific individual. These commenters state that because the purpose of an emergency contact is for FDA to communicate in an emergency situation with the facility, there is no need for FDA to contact a specific individual. Many facilities already have emergency contact procedures in place for responding to local emergencies; FDA's emergency contact information should provide flexibility for facilities to utilize these existing procedures. Also, requiring an individual to be identified by name may mean a facility would need to provide frequent updates to its registration, because the individual responsible for responding to emergencies may change on a frequent basis. Other commenters request that FDA allow a facility to designate an alternate emergency contact, or that FDA require the emergency contact to be located at the corporate headquarters, instead of at the facility.

Other commenters believe FDA has appropriately defined the scope of information necessary to accomplish the goal of quick response and notification in the case of a bioterrorist attack on the U.S. food supply.

(Response) FDA has considered these comments and in response, has modified the interim final rule so it does not require a facility to provide an individual's name as part of the emergency contact information. However, the facility must ensure that the information it provides will enable FDA to contact a live person representing the facility 24 hours a day, 7 days a week. FDA agrees that emergency contact information should be specific to the facility's already established emergency procedures; therefore, FDA will not necessarily require contact information for a corporate headquarters. However, a facility may designate the emergency contact information for its corporate headquarters, if that is appropriate for operations at that facility.

As noted, for foreign facilities, FDA will consider the facility's U.S. agent as the emergency contact unless specified otherwise in the registration. If a foreign facility designates someone other than its U.S. agent as the emergency contact, FDA will utilize that information to contact the facility instead of the facility's U.S. agent when an emergency occurs.

5. Trade Names

(Comment 125) Several commenters agree that trade names should be required as part of the registration. These commenters request that FDA define ''trade names'' and provide examples. One commenter states that requiring trade names for food

packaging is unworkable because ''brand codes'' and ''grade names'' change frequently, and would thus require continual updates.

(Response) The Bioterrorism Act specifically states that trade names should be a required part of the facility's registration, and thus, FDA agrees with the comment that trade names should be a required registration element. FDA also agrees that it should define the term, ''trade names,'' and, as discussed previously, provides a definition of ''trade names'' in the interim final rule. In response to the comment stating that ''brand codes'' and ''grade names'' change frequently, FDA notes that the trade names definition does not include this information, but only information about names the facility itself uses.

6. Product Categories Under § 170.3

(Comment 126) Many commenters assert that registrants should not be required to supply information regarding food product categories associated with a facility. A variety of reasons are offered, including that the categories are outdated and not relevant; the categories are difficult to understand and apply; use of the categories would lead to mistakes regarding a facility's selection of appropriate categories; categories would require a facility to submit constant updates to FDA, as a facility continuously changes the food it produces in response to market demands; use of categories would impose an enormous burden and increased cost; use of categories would limit targeted communications because often one manufacturer's finished product is another's ingredient, which would confuse FDA's efforts to notify affected facilities; facilities would be subject to criminal penalties if product category information is not correct or is outdated; under the Bioterrorism Act, FDA has the discretion to require this information and FDA should not exercise that discretion; use of categories introduces huge uncertainties as to whether the appropriate facilities would be contacted in the event of an emergency, which may lead either to causing unnecessary concern or inadequate notification of affected facilities; some categories overlap each other, yet many foods fall into gaps between categories; and requiring categories would increase the time to complete a registration. One commenter states that FDA should include food product categories, because these categories would help FDA to more closely focus inspection resources.

(Response) The interim final rule maintains the requirement that food product categories be specified in a facility's registration. As required by the Bioterrorism Act, FDA considered in guidance whether such categories should be included and determined that such information will be an important aid to the agency in the event of a foodborne emergency (68 FR 42415). The interim final rule requires each facility to submit the general food product category (as identified under § 170.3) of the food manufactured/processed, packed, or held at such facility. For ease of use, FDA lists the more common categories found in FDA's product code builder at *http://www.fda.gov/search/databases.html* as the main categories on the registration form, referencing the relevant food product category in § 170.3 for each FDA product code category. To relieve some of the burden of frequent updates, FDA has added a ''most/all human food product categories'' option. Facilities that manufacture/process, pack, or hold food that does not fit into one of the § 170.3 categories are required to check ''none of the above mandatory categories.'' These facilities may also choose to check one or more of the optional boxes that correspond to the category of food manufactured/processed, packed, or held at the facility, as specified in section 11(a) or 11(b) of the registration form.

FDA continues to believe that information regarding food product categories is necessary for a quick, accurate, and focused response to a bioterrorism incident or other food-related emergency. The categories will help FDA to focus its response on the appropriate facilities, saving crucial time. Some threats may be specific to a certain facility type (*e.g.*, a threat against beverage bottling facilities). Under these circumstances, being able to target communications will allow FDA to expedite and focus its response. The fact that in some instances a threat cannot be isolated to a finite set of facilities does not mean that this will be the case in all instances. Being able to focus communications as much as possible based on a particular threat through the use of food product categories will ensure that FDA is able to respond as effectively and efficiently as possible.

(Comment 127) One commenter notes that in the proposed registration form, FDA has stated that warehouses are not required to complete the section on food product categories. The commenter states that this exception for warehouses is not mentioned in the preamble or codified of the proposed regulations, and asks FDA to clarify this exception.

(Response) To ensure that facilities have fully completed the section on food product categories, FDA has changed this section to require all facilities to check at least one box. As noted, as required by the Bioterrorism Act, FDA considered in guidance whether such categories should be included and determined that such information will be an important aid to the agency in the event of a foodborne emergency (68 FR 42415). Thus, this interim final rule requires registrants to identify the food product category under § 170.3 for food manufactured/processed, packed, or held at each facility. FDA has also provided that facilities that manufacture/process, pack, or hold food in many different food product categories (such as many warehouses) do not have to check every food product category, and may instead check the ''most/all human food product categories.'' Importantly, however, the interim final rule requires a warehouse that holds only one or a limited number of different food products to identify those categories listed in § 170.3. Because the proposed rule would not have required a facility to identify a food product category on the registration form if it was manufacturing/processing, packing, or holding food that did not fit into a category under § 170.3, FDA would not have been able to determine whether a registrant's food product categories were not covered under § 170.3, or whether the registrant forgot to complete the section of the registration form on food product categories. Therefore, the interim final rule requires facilities that manufacture/process, pack, or hold food product categories not covered under § 170.3 to check ''none of the above mandatory categories.'' Because the revised version of the Form 3537 requires all facilities to check at least one box in the food product categories section, FDA has deleted the language in the form stating that warehouses are exempt from completing the food product categories section of the form.

7. U.S. Agent

FDA addresses comments related to the U.S. agent requirement in section III.E.15 of this document.

8. Certification Statement

(Comment 128) One commenter notes that the requirements for identifying personal information in the certification statement should relate to the individual making the certification, not the individual submitting the registration. This change would recognize that administrative personnel, not responsible parties of the company, may process the actual facility registration.

(Response) The Bioterrorism Act requires that the ''owner, operator, or agent in charge of the facility shall submit a registration'' to FDA. Accordingly, the certification statement on the registration form requires the owner, operator, or agent in charge of a facility to submit the registration, or to authorize an individual to submit the facility's registration. Although administrative personnel may prepare the registration, the owner, operator, or agent in charge, or an individual authorized by the owner, operator, or agent in charge to submit a facility's registration must certify that the information included in the registration is true and accurate.

(Comment 129) One commenter states that the certification statement is inadequate to ensure either the veracity of the information provided or the identity and authority of the person submitting it. The commenter states that ''[t]he regulation includes no protections that would prevent intentional or unintentional abuse of the system, to the potential detriment of both national security and of legitimate businesses. Without some effective means of verifying at least the identity and authority of the person submitting the registration, the proposed system will be easily subject to misuse and mischief.''

(Response) The certification statement requires a person authorized to submit a registration to certify that the registration information is true and accurate, and that owner, operator, or agent in charge of the facility has authorized the submitter to register on its behalf. The certification statement also states that anyone who makes a materially false, fictitious, or fraudulent statement to the U.S. Government is subject to criminal penalties under 18 U.S.C. 1001. As an additional means to verify the identity of the person submitting the registration, the interim final rule requires that for the paper and CD–ROM registration options, the registration include the signature of the person submitting the registration. FDA believes that the combination of the signed certification statement and Federal criminal liability will be a powerful incentive for truthful registrations. In addition, FDA has several methods by which to verify the identity of both facilities and individuals submitting registrations by any of the permissible means; however, for security reasons, FDA declines to elaborate on these methods.

In addition to the changes noted previously, on its own initiative FDA has made several editorial changes to this section for clarity.

I. Comments on ''What Optional Items Are Included in the Registration Form?'' (Proposed § 1.233)

1. General Comments

(Comment 130) One commenter states that the interim final rule should remain focused on effectively implementing the legislative requirements as is, neither expanding information requirements, nor adding optional information. The submitter states that if the information is not necessary, it should not be collected.

(Response) FDA notes that registrants are not required to submit the elements of optional information specified in the proposed rule and the interim final rule—that is the nature of ''optional'' information. FDA continues to believe, however, that information described as ''optional'' will enable FDA to communicate more effectively with facilities that may be the target of an actual or potential terrorist threat or other food-related emergency and that better communication about such emergencies will benefit both FDA and the registered facility. For example, some food products are not covered in the categories specified in § 170.3, such as certain dietary supplements, infant formula, and animal feed, but foods in these categories may nevertheless be the focus of a food-related emergency. Therefore, FDA encourages, but does not require, a registrant to submit in a facility's registration the information identified as optional in the interim final rule.

(Comment 131) Several commenters ask that FDA clarify what sections of the registration form (Form 3537) are mandatory and which are optional. One of these commenters states that FDA should mark optional fields in some form, such as an asterisk, and program the electronic downloadable file to allow the registration to proceed as long as the mandatory fields have been completed. This commenter states that, at a minimum, FDA should insert the word ''**REQUIRED:**'' or ''**OPTIONAL:**'' in boldfaced, underscored, and all capital letters following the section titles to clarify further which information is required and which is optional. The commenter also suggests that instructions be provided for filling out the form that include specific citations to those sections where the information is required and where optional. Another commenter suggested that FDA consider a second form for voluntarily-submitted information. Otherwise, the commenter believes that the Food Facility Registration Form will cause confusion as to which information is required by law, versus information that is optional because the optional sections of the form are interspersed with required information sections.

One commenter states that the space on the Registration Form is somewhat limited and proposes that the registration form be expanded to accept appendices for registrants to submit additional information.

(Response) FDA believes its proposed registration form is sufficiently clear as to which sections of the form are required and which are optional. For each section of the registration that is optional, FDA has included the word, ''OPTIONAL'' in bold. For the food product categories section involving food for human consumption, FDA has included the words, ''Optional Selection'' in bold after each category that is not required. In the instructions for completing the registration, FDA intends to specify which sections are required and which are optional. FDA notes that the agency considered having a separate form for optional information but rejected it after determining that the order of the sections in the proposed registration form was clearer and flowed more effectively when in a single form, rather than two separate forms.

FDA further advises that the agency's electronic registration system will be sufficiently flexible to permit a registrant to enter all of the information the registrant needs to enter. FDA has revised both the paper and electronic registration forms to provide ample space for including all relevant information. However, for both the printed and electronic versions of the registration, FDA is only accepting information listed on the registration form; registrants should not add information not identified as required or optional in this rule or described on the registration form. Due to the large anticipated volume of registrations, the registration system will not provide for the submission of appendices to the registration form.

(Comment 132) Some commenters suggest that FDA include additional optional sections on the registration form, including sections for type or other facility registration number (*e.g.*, the U.S. Customs Service bonded facility Facilities Information and Resources Management System (FIRMS) code, FDA establishment number, FDA-assigned Food Canning Establishment number, Seafood Hazard Analysis and Critical Control Point importer food number, FDA Affirmation of Compliance code, and the location number of the U.S. domestic party responsible for FDA-regulated goods imported by a foreign Importer of

Record), as well as an option for an ''other'' type of code; and the appropriate registration number for each option that is checked. The commenters state that this would minimize confusion, especially about which of a facility's multiple registration numbers apply to what types of activities.

(Response) FDA has decided not to implement this suggestion. In the Bioterrorism Act, Congress specified what information must be required in a facility's registration. After careful consideration, FDA has concluded that a few additional elements of information are needed for the efficient enforcement of the act in responding to a bioterrorist threat or other food-related emergency. Because FDA believes the additional information suggested by these comments would not significantly further FDA's efforts in responding to such incidents, we decline to include them as registration elements.

2. Type of Activity Conducted at the Facility

(Comment 133) Several commenters state that the option of including on the registration form the ''category'' or ''type'' of food warehoused, produced, or sold by a facility should be required. These commenters state that this information appears to be critical in determining who should be notified in case of a threat or actual terrorist event targeting a particular type of food. One commenter suggests that FDA use a ''simpler method'' to determine these categories, such as that utilized for classifying an establishment (*e.g.*, 03 for bakeries, 16 for fishery products, 29 for soft drinks, 47 for food warehouses), which should suffice as a means of categorizing establishments. One commenter states that FDA should either make establishment type data mandatory or delete this information entirely. This commenter states that FDA is unlikely to get full compliance voluntarily with the request for establishment type information, when no penalty would be imposed if this optional information were inaccurate when submitted initially or became out of date.

(Response) FDA has required only what is specified in the Bioterrorism Act and information that is necessary for the efficient enforcement of the FD&C Act. Although we believe the information in the optional items can be useful to FDA as well as to facilities in the event of an emergency, we are requiring only those items required by the Bioterrorism Act and those necessary for the efficient enforcement of the FD&C Act.

3. Type of Storage, if the Facility Is Solely a Holding Facility

(Comment 134) FDA received several comments agreeing that a facility that is ''solely a warehouse'' should only have to check a simplified description of the type of warehousing provided, such as ''ambient storage,'' ''refrigerated storage,'' or ''frozen storage,'' rather than submit a detailed breakdown of the general food product categories stored in the facility, as required in section 11 of the draft form. These commenters state that this simplified option avoids the need to determine and track food product categories for virtually thousands of different food items that may enter or leave a warehouse.

The commenters ask, however, that FDA define what is meant by ''solely a warehouse.'' The commenters state that most, if not all, public and contract food warehouses also provide ancillary services that include labeling, relabeling, packing, and repacking, but the warehouse typically provides these services without in any way changing, contacting, or doing anything at all to the actual food. The commenters state the warehouse never ''goes inside'' the primary packing, thus avoiding any potential for contamination. The commenters state that these services are incidental to the core function of storing and handling and are performed strictly under the direction and control of the customer.

(Response) As explained previously, to ensure that registrants have completed the section of the form on food product categories, FDA has decided to require that all registrants check at least one box in the mandatory food product categories section of the form (section 11a). Therefore, a facility that is solely a warehouse is required to check either one or several food product categories covered under § 170.3, ''the most/all human food product categories,'' or ''none of the above mandatory categories.''

Regarding the question of what FDA means by ''solely a warehouse,'' FDA agrees that this term was confusing. We have revised Form 3537 to eliminate that term. We are also providing that all food facilities must complete section 11 which concerns general product categories. We have revised section 10 of the form and § 1.233(i) to refer to facilities that are primarily holders.

4. Food Categories Not Included Under § 170.3

(Comment 135) One commenter argues that FDA's proposed optional food product categories should be mandatory, not optional. This commenter asserts that FDA should use a simpler method of classification of all food product categories, such as that used for food establishments.

(Response) FDA believes that it is a reasonable choice for the agency to make optional identification of food product categories that are not listed in § 170.3. There is a strong incentive for facilities that handle foods in the optional categories to provide this information, because with such information, FDA will be better able to target its communications in case of a threatened or actual bioterrorist event or other foodborne emergency. Getting prompter and more accurate information will help a facility respond more quickly and efficiently to any incident that may affect that facility. As discussed previously, for ease of use, FDA is using the more common categories found in FDA's product code builder at *http://www.fda.gov/search/databases.html* as the main categories on the registration form, referencing the relevant food product category in § 170.3.

(Comment 136) Several commenters submitted comments regarding the ''most/all human food product categories'' designation. Most of these commenters agree with FDA's preliminary decision to include ''most/all'' product categories. One commenter states that a facility that normally carries all food categories and therefore has included ''most/all food product categories'' in its registration should not be required to amend their registration or be subject to penalties if they have temporarily run out of products in a specific food category, but intend to restock the items. Another commenter argues that FDA should delete the ''most/all'' food product category. The commenter states that in the event of an emergency, a delay could result since FDA would be unnecessarily contacting facilities that do not manufacture/process, pack, or hold the precise food in question. Also, a facility could process different food products almost daily, but not be required to notify FDA of any changes.

(Response) The interim final rule retains ''most/all human food product categories.'' This category will enable facilities that manufacture/process, pack, or hold many different types of food to check the ''most/all'' category instead of having to update their registrations frequently. In making this decision, FDA has balanced the greater efficiency of the agency's having specific information regarding food manufactured/processed, packed, or held at each facility against the burden on facilities to submit initially and

update this information as circumstances change. While FDA agrees that in some instances this may result in FDA contacting facilities that check the ''most/all human food product categories'' box when they do not handle a particular food product either at all or at that particular time, on balance, these circumstances are likely to be relatively infrequent compared to those contacts with a facility that does manufacture/process, pack, or hold the food in question.

In addition to the changes noted previously, on its own initiative FDA has made several editorial changes to this section for clarity.

J. Comments on ''How and When Do You Update Your Registration Information?'' (Proposed § 1.234)

(Comment 137) Several commenters state that the 30-day update requirement is burdensome to industry. Information such as food product categories and emergency contact information is constantly changing and thus, registrants would need to submit updates continuously. Commenters suggest varied timeframes for updates, including 14 days, 60 days, 90 days, 6 months, or every year. In addition, some commenters recommended different update requirements for different information, such as more frequent updates for emergency contact information. Another commenter suggests that FDA require re-registration annually, instead of requiring updates.

(Response) In response to these comments, FDA has decided to change the period for an owner, operator, or agent in charge of a facility to update its registration to 60 days for any change to any of the required registration elements previously submitted. This timeframe strikes a balance between the commenters' concern and FDA's requirement under the Bioterrorism Act to keep our database current. Because registration information will be used both to evaluate prior notice submissions and to notify affected facilities in the event of a food-related emergency, it is advantageous both to FDA and to registrants that the agency's database be current.

In terms of the burden of updating food categories, as noted previously, a facility has the option of specifying the ''most/all human food product category'' in the food product category section of the registration (if appropriate to the facility). To alleviate at least in part registrants' burden to provide continuous updates, the interim final rule provides that the emergency contact information need only include an emergency contact phone number, instead of a person's name or other individualized information.

(Comment 138) Some commenters ask for clarification regarding what types of changes to a facility's registration require updates. One commenter asks whether FDA requires an update for temporary plant closures due to weather, fumigation activities, or line changeovers. Another commenter asks whether temporary changes in the general food product categories held or processed at the facility would require an update. Another commenter states that numerous changes to production, product lines, packaging, and establishment names should not require an update.

(Response) The interim final rule requires updates for changes that reflect a modification of a facility's operations, as it relates to the required registration elements. Therefore, for facilities engaged in ongoing operations that temporarily close for the reasons identified in the comment, no update to a facility's registration information is required. However, in considering whether to update temporary changes to registration information, foreign facilities should keep in mind that registration information will be matched with prior notice information, and discrepancies in the two databases may cause FDA or CBP to examine a shipment.

(Comment 139) Several commenters ask FDA to clarify whether an update or a cancellation is warranted if a facility changes ownership or goes through a merger or acquisition. One commenter indicates that when a change in ownership occurs, the authority to make changes to a registration would also likely change. Some commenters argue that a registered facility should be able to keep its registration number through change in ownership or management. At some point in the process of ownership or management change, the former registrant should no longer be authorized to make a change, and certainly could not represent the information of the new owner.

(Response) Although the proposed rule and draft Form 3537 provided for information regarding changes in owner, operator, or agent in charge to be submitted as updates to the registration, neither the proposed rule nor the form provided for such information to be submitted in the initial registration. As noted in the response to comment 96, the interim final rule at § 1.232(c) and Form 3537 have been revised and require that the name of the owner, operator, and agent in charge to be provided as part of the initial registration.

FDA believes, however, that a change in the owner of a facility triggers a new registration, because under the Bioterrorism Act, the registration information is confidential, and the former owner should not know the registration number assigned to the new owner. Moreover, the Bioterrorism Act requires the owner, operator or agent-in-charge to register the facility. Therefore, FDA is deleting the reference to ''owner,'' in ''Owner, operator, or agent in charge change'' in section 1b of the registration form. If a facility comes under new ownership, the former owner must cancel the old registration in accordance with § 1.235, and the new owner must submit a new registration for the facility in accordance with §§ 1.230 and 1.231. FDA realizes, however, that some old owners may not cancel their registrations. Therefore, in new section 1c of the form, FDA is requiring new owners to check the box ''Are you a new owner of a previously registered facility?'' and asking new owners to provide the previous owner's name and registration number, if known. If the new owner does not provide the old registration number, FDA will keep the old registration in its database until it independently affirms that the facility is under new ownership. If the new owner provides the old registration number, FDA will send a notification to the old owner seeking confirmation, and will cancel the old registration upon receipt of confirmation, or FDA's independent confirmation of a change in ownership, whichever occurs first. If the former owner notifies FDA within this 60-day period that it has not sold the facility, FDA will contact both owners to remedy the discrepancy.

(Comment 140) Some commenters state that FDA should require facilities that go out of business to submit a notice of cancellation of their registration as soon as possible, or no later than 14 days after the business operations cease. These commenters state that updated information on a facility's business status would help ensure that if there is a bioterrorism event, FDA is not wasting resources by attempting to contact facilities that no longer exist or are out of business. The commenters state that requiring cancellation of registration would also help ensure that an organization or group cannot threaten the American food supply by using a former business' registration as a means to import into or distribute within the United States tainted products. One commenter urges FDA to consider ways to purge obsolete registrations from its database because

businesses that cease operations would not necessarily cancel their registrations.

(Response) Because a registration cancellation is essentially an update of registration information, FDA believes the time period for canceling a registration should be 60 days, the same as that for updates. Regarding purging its database of obsolete registrations, FDA will cancel a registration if it independently verifies that the registrant has gone out of business or if someone has registered a facility that does not exist. If FDA cancels a facility's registration that has gone out of business, FDA will mail a confirmation of the cancellation to the facility.

(Comment 141) One commenter believes that the amount of information FDA proposes to require in the cancellation notice is excessive. The commenter requests that FDA require only the facility's registration number, the name and contact information for the person submitting the cancellation, and the certification statement for a cancellation.

(Response) The only elements the cancellation form includes in addition to those listed in the commenter's request is the facility's PIN number, whether the facility is domestic or foreign, and the facility's name and address. FDA believes the information in the cancellation form is necessary for FDA to verify that it is canceling the correct registration, because canceling the wrong facility's registration could have unintended consequences.

(Comment 142) Several commenters request that FDA clarify the penalty for failure to update a registration within the required timeframe. The commenters indicate that absent a coercive element, the value of this tool is subject to failure.

(Response) The Bioterrorism Act requires owners, operators, and agents in charge of facilities to register with FDA and also requires FDA to keep its registration database current. Accordingly, § 1.241 states that failure to submit a timely update to required registration elements is a prohibited act, because obsolete information may hinder FDA's efforts in responding to a threatened or actual bioterrorist act or other food-related emergency. The FD&C Act provides for civil and criminal sanctions for those who commit a prohibited act.

(Comment 143) Several commenters urge FDA to not require facilities to update optional information previously submitted (such as the type of activities conducted at the facility, as well as the optional food categories or type of storage). One commenter requests that FDA state in the interim final rule that the failure to update optional information will not subject the registrant to penalties under the act or FDA's implementing regulations. The commenter states that the requirement to update previously submitted information in optional fields ''could have a chilling effect on the willingness of companies to provide the optional information in the first place.''

(Response) FDA has considered these comments and has revised § 1.241(a) to delete the reference to optional information. The Bioterrorism Act requires that a registrant notify the Secretary in a timely manner of changes to information submitted in a registration (21 U.S.C. 350d(a)(2)). FDA believes that it is clear that the failure to update required information is a prohibited act (21 U.S.C. 331(dd)). The agency is concerned, however, that extending the prohibited act to failure to update optional information will create a disincentive to registrants to provide the optional information contrary to the interests of the agency and registered facilities. Accordingly, FDA has revised § 1.234(a) to provide that only required information must be updated and § 1.241(a) to provide that failure to update required information is a prohibited act.

Although the interim final rule will not make the failure to update optional information a prohibited act, FDA emphasizes that updates of registration information are very important, because obsolete information may hinder FDA's efforts in responding to a bioterrorist act or other food-related emergency. Accordingly, the agency strongly encourages the owner, operator, or agent in charge of each registered facility that provides FDA with optional information in a registration to promptly update such information when it changes. In addition, FDA encourages the owners, operators, and agents in charge of registered facilities to update their registrations to delete optional information that is obsolete.

(Comment 144) One commenter asks FDA to clarify whether FDA will keep updated information on file as well as the reason for the change. The commenter states that ''[i]n order to track activities of all sides, if that is what the intended purpose is, a ''tracking and activity mechanism'' would have to be in place. This would require, however, that the agency has trained personnel that are able to spot unreasonable irregularities and not go on a ''witch hunt.''

(Response) FDA intends to keep updated information on file. FDA inspectors will compare a facility's registration information with the information they obtain during the inspection of a registered facility. The failure of an owner, operator, or agent in charge to register a facility is a prohibited act, as is both the failure to update outdated required registration elements within 60 days of the change, and the failure to cancel a registration within 60 days if changes at the facility warrant cancellation.

(Comment 145) One commenter requests that FDA's electronic registration system be designed to permit a facility to use the original information screen as the starting point for updating or canceling the registration.

(Response) FDA advises that when a registrant accesses the electronic system to update the registration for a particular facility, the system is designed to provide the existing registration. Therefore, the registrant will only need to edit the sections of the registration that need to be updated.

(Comment 146) One commenter asks FDA to send an automatic e-mail reminder to registrants on a yearly basis to remind them to update their registrations.

(Response) As resources allow, FDA will to send periodic notices to registrants, reminding them to update, as necessary, information in their registration.

In addition to the changes noted previously, on its own initiative FDA has made several editorial changes to this section for the purpose of clarity. FDA has also added section § 1.235 *''How and when do you cancel your facility's registration information?''* This new section contains information that was previously in section § 1.234, ''How and when do you update your registration information?'' FDA has added this section for the purpose of clarity.

K. Comments on ''What Other Registration Requirements Apply?'' (Proposed § 1.240)

(Comment 147) Many commenters state that they have already registered with other U.S. Government agencies, as well as foreign governments and States. The commenters state that requiring these facilities to be registered with FDA as well is a burden. The commenters also argue that FDA should coordinate with other agencies and governments to avoid duplication.

(Response) The interim final rule maintains the registration requirement as proposed, for several reasons. For all facilities that FDA determines are subject to section 305 of the Bioterrorism Act, we believe that the

statute requires the owner, operator, or agent in charge of those facilities to submit a registration to FDA. Obtaining existing registration information from other agencies would not guarantee that FDA has the information for all facilities required by the Bioterrorism Act's registration requirement because there is wide variation in the purposes and information required by other registration or permitting systems. For example, the laws administered by the Alcohol and Tobacco Tax and Trade Bureau (TTB) do not require foreign alcohol beverage producers to obtain permits, unless they are also engaged in the business of importing alcohol beverages into the United States. In addition, the information provided by alcohol beverage permittees to TTB is not entirely identical to the information that must be provided by facilities to FDA in accordance with the provisions of this interim final rule.

Although it is theoretically possible for FDA to obtain information from other agencies, the stringent timeframes for issuing this interim final rule do not provide FDA adequate time to reconcile the different information required or to work with the other agencies to have them amend their existing requirements to capture all the information FDA needs. We would also need to work with other agencies to ensure the confidentiality of nonpublic registration information under relevant information disclosure laws (*e.g.*, §§ 20.85 and 20.88 (21 CFR 20.85 (Federal agencies), 20.88 (State agencies), and 20.89 (foreign governments))). Because the purpose of registration with FDA is to assist FDA in responding to threatened or actual bioterrorist incidents or other food-related emergencies, FDA must have the registration information readily accessible. If FDA has to coordinate with other agencies or governments to obtain from them the information necessary to respond to such an emergency, FDA may be prevented from responding to the emergency in a timely manner.

Regarding facilities that may be registered with FDA under existing regulations (*e.g.*, low acid canned food), like the registrations of other agencies, these FDA registrations also do not contain all of the information required in this interim final rule, because the purposes of the regulations differ. FDA will continue to look for ways to minimize duplicative registrations in the future, but could not do so in the timeframe provided for developing this rule. On its own initiative, FDA has made several editorial changes to this section for the purpose of clarity.

L. Comments on "What Happens if You Fail to Register?" (Proposed § 1.241)

1. Revocation of Registration

(Comment 148) Several commenters submitted comments in response to FDA's request for comments regarding the circumstances under which a firm's registration should be cancelled and/or considered null and void. One commenter states that neither the FD&C Act nor the Bioterrorism Act authorize revocation of registration. One commenter states that because the Bioterrorism Act's Rule of Construction notes that registration is not a licensing or approval process, FDA cannot extend or withdraw approval. This commenter suggests that a registration may only be vacated through the ordinary criminal process to prove fraud if the registration is made fraudulently. Another commenter states that revocation should be reserved for extreme situations of bioterrorism, intentional contamination, and other criminal activity, and should afford a facility an opportunity for an adjudicative hearing, since revocation effectively prohibits a facility from manufacturing/processing, packing, or holding food for consumption in the United States. A foreign commenter suggests that any revocation of registration should occur only after a process that involves foreign authorities within the same locale as the foreign facility, in consultation with the U.S. Embassy. One commenter requests a clear delineation of the circumstances warranting registration suspension, suggesting that it should extend only to the parameters of the Bioterrorism Act. Another commenter suggests that revocation of registration should only be considered for facilities that have ceased trading, or no longer handle food products. A commenter suggests that FDA clarify the distinction between suspension and revocation: Revocation should only be for facilities that have gone out of business or that have submitted false information. FDA should employ the less drastic penalty of suspension for submission of inaccurate, incomplete, or untimely information. The commenter suggests that FDA notify a facility that failure to submit all of the required information within 15 days will result in suspension. Registration could be reinstated when this missing information is provided.

(Response) FDA does not agree that it should have a category of registrations that have been suspended. A facility either is registered by submitting a registration to FDA or it is not registered. Regarding registration cancellation, FDA has determined that the only circumstances under which it will cancel a registration are if the agency independently verifies that a facility has gone out of business or is under a new ownership, or if FDA establishes that the submitted registration is for a facility that does not exist. FDA has clarified this in the interim final rule by adding the following paragraph to § 1.241:

(b) FDA will cancel a registration if the agency independently verifies that the facility is no longer in business or has changed owners and the owner, operator, or agent in charge of the facility fails to cancel the registration, or if FDA determines that the registration is for a facility that does not exist. If FDA cancels a facility's registration, FDA will mail a confirmation of the cancellation to the facility at the address provided in the facility's registration.

As mentioned previously, a facility under new ownership is required to submit a new registration.

(Comment 149) One commenter asks that FDA not recall products already distributed into commerce if it determines after confirmation of the registration that the registration contains inadvertent errors.

(Response) Neither the proposed rule nor the interim final rule provide for the recall of food distributed into commerce because FDA subsequently determines that there are inaccuracies in the registration of a facility at which the food was manufactured/processed, packed, or held.

2. Prohibited Act for Domestic or Foreign Facility

(Comment 150) Several commenters request clarification on the penalties that may be imposed for failure to register and who may be subject to these penalties. One commenter states that failure to register may be a simple omission rather than a terrorist act; therefore, FDA should apply criminal actions according to the consequences and characteristics of the act. Another commenter asks FDA to clarify that although failure to register is a prohibited act, importing food from an unregistered facility is not. A commenter asks FDA to clarify that failure to register, although a prohibited act, will not result in debarment. This commenter asks FDA to maintain a public list of debarred individuals and firms, and make this list available on the Internet.

(Response) FDA agrees that § 1.241 was likely confusing and has clarified this provision in the interim final rule. Specifically, the interim final rule consolidates the two provisions relating to the prohibited act of failing to register (21 U.S.C. 331(dd)) and makes clear that

the causing of a prohibited act and being responsible for the commission of a prohibited act are both subject to sanction under the act (21 U.S.C. 331). Thus, under the interim final rule, the owner, operator, or agent-in-charge of any facility that manufactures/processes, packs, or holds food for consumption in the United States, who is required to register the facility with FDA but fails to do so, commits a prohibited act under section 301 of the FD&C Act. Similarly, the owner, operator, or agent in charge that fails to update mandatory information or cancel a registration within 60 days (if changes at the facility require an update) commits a prohibited act.

FDA has also clarified that the disposition of a food from an unregistered foreign facility when offered for import into the United States will be governed by subpart I of this part (Prior Notice of Imported Food). FDA is publishing elsewhere in this issue of the **Federal Register** a interim final rule implementing section 307 of the Bioterrorism Act, which requires, among other things, an importer to submit to FDA prior notice of a shipment of food that is offered for import. As discussed in response to comment 162, FDA addresses the consequences for importation of food for failure to register in the interim final rule implementing prior notice published elsewhere in this issue of the **Federal Register**.

With regard to the comment on debarments, § 1.241 merely relates the grounds for debarment specified in section 306(b)(3)(A) of the FD&C Act. The agency's implementation of the details of the debarment provisions of the Bioterrorism Act are outside the scope of this interim final rule.

3. Food Held at the Port

(Comment 151) Many commenters express concerns about the custody and responsibility for products placed under hold. Several commenters ask who is responsible for costs associated with food held at the port. One commenter asks FDA to clarify that any party in the commercial import process, including the shipper, could be responsible for arranging the bonded hold, and that such arrangements are not FDA's responsibility. A commenter requests that FDA be responsible for any costs incurred from mistakes made in enforcement of the rule that results in the holding of imported food. One commenter recommends that a clear chain of custody and fiduciary responsibility must be established for products placed on hold. One commenter requests that FDA and Customs issue guidance on holding food before December 12, 2003.

(Response) In proposed § 1.241, we described the consequences of failure to register when food is imported or offered for import from a foreign facility that is required to register under section 305 of the Bioterrorism Act. At the same time, we included in the proposed rule implementing the prior notice requirements of section 307 of the Bioterrorism Act, a provision requiring the registration number of certain facilities to be provided as part of the required prior notice information. In the prior notice proposal, we also discussed the consequences of failure to provide required information, including required registration information, when importing food. We believe that including consequences of failing to register for foreign facilities in two different regulations may be confusing. Therefore, we have revised § 1.241 to include simply a cross reference to subpart I (Prior Notice of Imported Food), which sets out how food imported or offered for import from facilities not registered as required will be handled. Thus, we have deleted § 1.241(e) through (h). Although we no longer have provisions regarding imported food in this interim final rule, we are addressing the comments we received.

With regard to this comment, before the enactment of the Bioterrorism Act, FDA's role was to make admissibility decisions as to whether food imported or offered for import into the United States should be refused admission under section 801(a) of the FD&C Act. Any storage and transportation costs associated with FDA's refusal process were borne by the relevant private parties according to their contractual agreements. Nothing in the Bioterrorism Act changes who bears the costs related to food that may not be admitted into the United States. Although § 1.241(f) has been removed from this interim final rule, the prior notice interim final rule states that neither FDA nor CBP are liable for transportation, storage, or other expenses. The proposed registration rule and the proposed prior notice rule provided for costs to be borne by the owner, purchaser, importer, or consignee. FDA has reconsidered and believes that it would not be appropriate to specify which parties are responsible for costs as this is a commercial rather than a regulatory matter. Accordingly, the interim final prior notice rule merely provides that FDA or CBP is not liable for the costs.

(Comment 152) Several commenters request that FDA ensure that appropriate and sufficient storage facilities (including climate controlled storage) exist before the Bioterrorism Act is enforced and that FDA release the food immediately once relevant facilities register. One commenter requests that FDA not hold food based on simple problems or errors in registration, such as misspelling. One commenter asks if the ''secure location'' must be a Customs bonded facility. Another commenter asks FDA to clarify the procedure it will follow to notify a foreign facility when its products have been held at the U.S. port because of failure to register. A commenter asks FDA to permit prompt registration, ideally electronic, when failure to register is discovered at the port of arrival. A commenter argues that if a shipment appears likely to be held, the exporter should have the option of taking it back or sending it to another country. This commenter argues that if FDA delays a shipment too long for administrative reasons, FDA should provide compensation. Another commenter states that the proposed regulations should be amended to specifically provide for release of compliant articles mixed with noncompliant articles. This commenter argues that FDA should not hold compliant articles while it is waiting for registration of the facilities that are associated with the noncompliant articles.

(Response) As stated previously, a facility may register either electronically (the preferred and fastest method) by mail (using paper or CD–ROM), or by fax. A facility that is registered electronically will receive its registration number almost instantaneously. FDA will process registrations received by mail or fax in the order received. It is the responsibility of the owner, operator, or agent in charge of each facility subject to the requirements of this rule to register before December 12, 2003, and before food from the facility is imported or offered for import into the United States. The Bioterrorism Act prohibits food from an unregistered foreign facility from being delivered for distribution in the United States.

As explained in more detail in the preamble to the interim final prior notice rule, the electronic systems for submission of prior notice will not provide confirmation that prior notice has been accepted by FDA for review unless the required registration information is complete and facially correct. Thus, the transmitter of the prior notice may be informed when there is a problem with the registration numbers.

In addition, with regard to whether FDA will notify the foreign facility that its food is being held for failure to register, we intend that FDA or CBP will notify the carrier of the food that the food is being placed under hold. Also, if a shipment includes both compliant and noncompliant articles of food, segregation will be allowed as provided for in the prior notice interim final rule.

If a facility is not registered and discovers this fact at the port, the owner, operator, or agent in charge must register the facility with FDA if they wish the food to be distributed in the United States. FDA strongly encourages electronic registration, as that will be the fastest method. FDA will continue to process registrations submitted via other means in the order received. To do otherwise would be unfair to the other registrants who have submitted their registrations to FDA as required by this interim final rule ahead of the facility whose food is at the port, particularly since many of those facilities also will be importing or offering for import food into the United States.

FDA agrees that appropriate storage and holding conditions must be considered. This means, for example, that if the article of food arrives in frozen condition and has been transported under frozen conditions, the facility used for holding the product must provide adequate frozen conditions.

(Comment 153) One commenter expresses concern that ''the entire burden of proof lies with the facility'' regarding FDA's determination to not allow food to enter the United States if ''registration has [not] been completed.'' The commenter states that ''this may in our view be problematic, especially in the case of registration by regular mail.''

(Response) Registered facilities will receive their registration numbers as confirmation of registration with FDA. For a registration submitted electronically, a facility will receive its registration number immediately following completion of the registration process. For registrations submitted by mail, CD–ROM, or fax, FDA considers a facility registered once FDA enters the facility's registration data into the registration system and the system generates a registration number. This means that FDA may consider a facility registered before the facility receives its registration number and confirmation. To ensure that facilities are registered as expeditiously as possible, FDA encourages facilities to register electronically, or if registering by mail, CD–ROM, or fax, to submit the registration as soon as possible after publication of this interim final rule.

(Comment 154) One commenter asks FDA to provide a right for parties adversely affected by a refusal of admission to challenge that determination through judicial review.

(Response) As stated in the response to comment 151, the procedures for imported food are set out in the interim final rule on prior notice of imported food published elsewhere in this issue of the **Federal Register**.

(Comment 155) One commenter asks FDA to include in its protocol that FDA uses for holding food at the port of arrival due to a failure of the facility to register a ''clear message to consumers that [the] product is being held because of a registration issue and not because the product poses some food safety or security risk.'' The commenter states that ''poor communication could cause consumer alarm and erode consumer confidence.''

(Response) This comment does not affect any of the provisions of this interim final rule. Therefore, FDA will consider this comment as it develops its training procedures. In this interim final rule, we have changed the title of § 1.241 to ''What are the consequences of failing to register, update, or cancel your registration?''

M. Comments on ''What Does Assignment of a Registration Number Mean?'' (Proposed § 1.242)

FDA received no comments on this issue. FDA made a minor editorial change to this section for the purpose of clarity.

N. Comments on ''Is Food Registration Information Available to the Public?'' (Proposed § 1.243)

(Comment 156) One commenter states that FDA should not share registration information with states or other Federal agencies and, if it does, it must ensure that the other agencies and States protect the confidentiality of the information.

(Response) FDA believes that in certain circumstances, it may need to share information derived from its registration database with States or other Federal agencies consistent with FDA's laws and procedures. Any sharing with another Federal agency would be done under § 20.85 which includes confidentiality provisions. Similarly, any sharing with State officials would be under § 20.88 which also includes confidentiality provisions.

(Comment 157) Several commenters request that third parties, particularly importers, should be able to verify that a particular facility is registered.

(Response) As discussed in response to comment 158, FDA's list of registered facilities and registration documents are not subject to disclosure under the Freedom of Information Act (FOIA). In addition, any information derived from the list of facilities or registration documents that would disclose the identity or location of a specific registered person also is not subject to disclosure under FOIA. However, under the interim final rule on prior notice of imported food published elsewhere in this issue of the **Federal Register**, the prior notice must include the certain registration numbers. Therefore, the submitter of the prior notice must obtain that information from the facility.

(Comment 158) Some commenters suggest that FDA expand the protection from disclosure specified by the Bioterrorism Act to all information derived from registration documents that has not been previously disclosed to the public.

(Response) Section 305 of the Bioterrorism Act states that FDA's list of registered facilities and registration documents FDA receives under the rule are not subject to disclosure under FOIA. Furthermore, section 305 provides that any information derived from the list of facilities or registration documents that would disclose the identity or location of a specific registered person is not to be subject to disclosure under FOIA. If the information derived from registration documents is not exempt from disclosure by FOIA itself, the Bioterrorism Act, or another statute, FDA does not believe that the information is protected from public disclosure.

We realized that the proposed rule may been confusing with regard to the information that is not subject to disclosure. Therefore, we have revised the interim final rule to make it clear. Also, we have made a conforming change to 21 CFR 20.100(c) to add ''Registration of food facilities, in § 1.243 of this chapter.''

(Comment 159) One commenter asks FDA to require facilities to include their registration numbers on their finished food packaging, to assist in traceback efforts.

(Response) FDA declines at this time to require facilities to display their registration numbers on the food label. FDA believes that it will be able to conduct appropriate traceback efforts using the information presently required on the food label in conjunction with the database of registration information. Moreover, FDA believes it would not be feasible to require manufacturers/processors to place registration numbers on their food labels prior to the

December 12, 2003, deadline for registration.

(Comment 160) One commenter requests that FDA provide a facility's registration confirmation in the form of a certificate or card that facilities can display so inspectors can see if the facility is in compliance with the registration requirement.

(Response) FDA will send facilities a confirmation when FDA receives their complete registration. Facilities may use this confirmation to show their registration status.

IV. Analysis of Economic Impacts

A. Final Regulatory Impact Analysis

FDA has examined the economic implications of this interim final rule as required by Executive Order 12866. Executive Order 12866 directs agencies to assess all costs and benefits of available regulatory alternatives and, when regulation is necessary, to select regulatory approaches that maximize net benefits (including potential economic, environmental, public health and safety, and other advantages; distributive impacts; and equity). Executive Order 12866 classifies a rule as significant if it meets any one of a number of specified conditions, including having an annual effect on the economy of $100 million, adversely affecting a sector of the economy in a material way, adversely affecting competition, or adversely affecting jobs. A regulation is also considered a significant regulatory action if it raises novel legal or policy issues. FDA has determined that this interim final rule is a significant regulatory action as defined by Executive Order 12866.

This Final Regulatory Impact Analysis reflects changes made in the regulation from the proposed rule to the interim final rule, as well as changes in estimates in response to comments. It also includes responses to comments on the Preliminary Regulatory Impact Analysis (PRIA) (*see* 68 FR 5387 to 5413). Where there were no changes in the estimates provided in the PRIA, the estimates are summarized here. Interested persons are directed to the text of the PRIA for a fuller explanation of the estimates about which there were no controversy or changes. As noted in section III of this document, FDA received approximately 350 submissions in response to the proposed rule, which raised almost 200 issues. We continue with the discussion of the comments and FDA's responses to those comments using the same presentation as in section III, focusing here on the comments FDA received on the PRIA. Accordingly, the word ''Comment'' again will appear in parenthesis before the description of the comment, and the word ''Response'' will appear in parenthesis before FDA's response. As in section III, FDA has numbered each comment to make it easier to identify a particular comment. The number assigned to each comment below continues in sequence from section III and is purely for organizational purposes; it does not signify the comment's value or importance or the order in which it was submitted.

1. Description of Interim Final Rule

This interim final rule requires the registration of facilities that manufacture/process, pack, or hold food intended for consumption in the United States. In the event of an actual or threatened bioterrorist attack on the U.S. food supply or other food-related emergency, this information will help FDA and other authorities determine the source and cause of the event, and communicate with potentially affected facilities.

2. General Comments

(Comment 161) FDA received a number of comments that asserted that the costs or benefits of the proposed rule were incorrectly estimated.

(Response) If the comment asserted costs or benefits were incorrectly estimated without specifying which costs or benefits, there was not sufficient information for FDA to respond to that comment. However, comments that specified which costs or benefits were incorrectly estimated are addressed in later sections of this analysis.

(Comment 162) FDA received a comment that asked what a line entry is.

(Response) A line entry is a term used by FDA's automated system for imports, the OASIS reporting system (Ref. 2). A ''line entry'' refers to a line on an invoice that reflects a certain article specific to a manufacturer or packaging: *e.g.*, 100 cases containing 48 6-ounce cans of tuna.

3. Number of Facilities Affected

In the PRIA, FDA estimated the number of affected establishments by counting facilities, not firms. A firm may be composed of many facilities under the same ownership. The changes in behavior needed to comply with this regulation may take place at the firm or facility level. However, because facilities must be registered, and for ease of analysis, FDA focused on the facility as the unit of analysis. For a count of domestic facilities, FDA used the 2000 County Business Patterns (Ref. 3), 1999 Nonemployer Statistics (Ref. 4), the FDA Field Accomplishments and Compliance Tracking System (Ref. 5), the Census of Agriculture (Ref. 6), 1997 Economic Census of Transportation and Warehousing (Ref. 7), and information from direct selling marketing trade associations (Refs. 8 and 9). The analysis relies primarily on the Nonemployer Statistics for its count of very small businesses (no paid employees) that may or may not be home-based. The Nonemployer Statistics' primary source is administrative data from Internal Revenue Service records. This may overcount the number of facilities required to register, as some of the facilities may be exempt on the basis of being an individual's private residence. Additional small facilities that are direct marketers are counted using data from direct marketing trade associations. FDA counted the number of facilities in the U.S. outlying islands of Puerto Rico, Guam, Virgin Islands, and Northern Mariana Islands using Economic Censuses available from the U.S. Census Bureau (Refs. 10, 11, 12, and 13). To count the number of foreign manufacturers/processors, FDA used FDA's OASIS database (Ref. 2). As noted, OASIS is an automated FDA system for processing and making admissibility determinations for shipments of foreign-origin FDA-regulated products seeking to enter domestic commerce. FDA also estimated that 16 percent of the foreign manufacturers/processors would stop exporting to the United States because of the cost of complying with this regulation. Also counted were foreign holders of products to be exported to the United States. FDA did not have data on the number of foreign holders and so assumed that they were equal to the number of consignees, brokers, and importers of food products in the United States. Foreign de minimis processors and packagers were not included in the OASIS count and so were estimated using U.S. data on the number of packer/repackers. Tables 3 through 7 of this document present the counts of domestic and foreign facilities.

(Comment 163) FDA received a number of comments stating that the number of affected facilities had been underestimated.

(Response) Many of these comments did not provide any specific information about the categories of facilities that were undercounted or not included or information about the correct number of facilities. Without this additional information, FDA has no basis for responding to these comments. However, FDA responds in the number of facilities section to comments that

provided additional information about the category or number of undercounted facilities.

(Comment 164) A comment suggests that FDA failed to include very small facilities in its count of affected entities.

(Response) FDA disagrees with this comment. FDA included in its count more than 68,000 very small facilities from the Nonemployer Statistics published by the U.S. Census Bureau. These are all facilities that are run by a single person with no paid employees. Additionally, the majority of the facilities counted from the County Business Patterns published by the U.S. Census Bureau are considered small businesses under the Small Business Administration definition.

(Comment 165) FDA received a comment that the number of foreign holders may be much larger than the number of U.S. consignees and brokers, because a single broker may use multiple warehouses.

(Response) FDA agrees that a single broker may use multiple warehouses, but FDA also believes the converse is true, that a single warehouse may be used by multiple brokers. This comment did not provide an alternative estimate of the number of foreign holders. Therefore, FDA has not altered its estimate of the number of foreign holders.

(Comment 166) FDA received many comments that the count of facilities failed to include transportation company facilities that hold food temporarily, while the product is in transit. Comments mention specific types of facilities, such as rail yards, container yards, LTL truck terminals, FTL truck terminals, Customs bonded Container Freight Stations, air cargo handling agents, and air, ocean, and truck bulk cargo terminals. FDA also received comments that the PRIA fails to include mobile facilities, such as river barges that pick up cargo in one location and travel to an alternate location where the barge may store product in its hull for several months prior to delivering the shipment to the purchaser.

(Response) Transport vehicles are not facilities required to register with FDA, if they hold food only in the usual course of business as carriers. However, facilities that unpack and reload food cargo from road, rail, water, or air transportation or hold food cargo in a facility, or that hold food cargo not only in the usual course of business as a carrier, are required to register. FDA agrees that not all these facilities were counted in the PRIA.

To count these facilities, FDA used the 1997 Economic Census of Transportation and Warehousing (Ref. 7) from the U.S. Census Bureau. Table 1 shows a count of these facilities. This includes the 1,461 warehouses North American Industry Classification System (NAICS 49312 and 49313) counted in the PRIA. These facilities are subtracted from the count of warehouses (NAICS code 493, all warehousing and storage) when final computations of the number of facilities are made. Including the transportation holding facilities in table 1 minus the warehousing facilities already counted in the PRIA increases the total number of facilities required to register by 33,666 facilities.

Table 1.--Transportation Holding Facilities

NAICS Code	Type of Facility	No. of Facilities
4841103	General freight trucking with storage, local, full truckload	542
4841104	General freight trucking with storage, local, less than truckload	373
484121	General freight trucking, long distance	23,111
4881191	Airport operation and terminal services	1,699
4882101	Support activities for rail transportation	816
4883901	Other services incidental to water transportation	640
4842205	Specialized trucking with storage, local	543
4884904	Other services incidental to road transportation	326
488991	Packing and crating (in Support activities for transportation	795
488999	Other support activities	102
493	All warehousing and storage	6,180
		35,127

(Comment 167) FDA received many comments that FDA underestimates the number of facilities covered by the definition of substances and components of substances that contact food. One comment states that FDA does not include the ''upstream'' manufacturers that make ingredients and components that go into food packaging and that any facility that manufactures/processes, packs, or holds a material that could become a component of packaging or other food contact article would be required to register. The comment further states that there is no logical conclusion to this chain. Also, some comments assert that FDA did not account for warehouses that hold articles that can migrate to food from food packaging or other articles that contact food.

Another comment states that FDA's count of the number of domestic facilities is overly inclusive if FDA's

intention is to include only finished packaging and that the OASIS database used for the count of foreign facilities does not include suppliers of food contact articles.

(Response) Under the interim final rule, manufacturers/processors, packers, and holders of food contact substances as defined in section 409(h)(b) of the FD&C Act are not required to register with FDA. Therefore, it is unnecessary for FDA to respond to the comments asserting the number of these facilities was underestimated. FDA also removes the estimated count of 32,428 facilities in the PRIA from the final analysis.

(Comment 168) One comment states that FDA's count of foreign facilities from OASIS (Ref. 2) did not include manufacturers/processors of articles that contact food and substances that could migrate to food from food packaging.

(Response) FDA agrees with this comment. The count of manufacturer/processors in OASIS (Ref. 2) did include manufacturers of food and food additives, but did not include all manufacturers/processors of substances that could migrate to food from food packaging. However, these facilities are not covered under the interim final rule. Therefore, FDA has not added them to the count of foreign facilities.

(Comment 169) A number of comments states that FDA had underestimated the number of facilities by failing to include individuals that market foods and dietary supplements through direct selling. These individuals often hold food for sale to an intermediary other than the final consumer. Estimates provided by comments were that there are 10 million individuals in the United States and as many as 40,000 direct marketers with a single company. Another comment referred to hundreds of thousands of direct sellers.

(Response) Direct marketers may be required to register if they hold food for distribution to nonconsumers in the United States. However, FDA does not agree that there are 10 million direct marketers in the United States that could potentially be required to register. FDA found estimates of 10 million (Ref. 9) and 12 million (Ref. 8) direct marketers in the United States, but these estimates were of all the direct marketers of both nonfood and food products in the United States. FDA does not have a complete census of the number of marketers of food versus nonfood products. To approximate the percentage of direct marketers selling food, FDA divided the number of direct marketing companies selling food by the number selling all types of products, using data from the directory of companies on the Web site of a large direct selling trade organization (Ref. 8). Of 141 companies in the directory, 7, or 5 percent, market food/beverages. However, most of these direct marketers of food may not be required to register. Direct marketers may be exempt: (1) If their primary function is to sell directly to consumers, or (2) if the establishment is an individual's private residence. FDA assumes that most direct marketers of foods would qualify for one of these exemptions.

To estimate how many direct marketers sell to consumers as their primary function, FDA looked at the type of distributorship. If the marketer has a one or two-person distributorship, FDA assumes that their primary function is to sell to consumers. FDA assumes if a marketer has a multiperson distributorship, they are likely to distribute to other sellers as their primary function. (These are not definitions that FDA will use to determine if selling to consumers is the primary function of a facility; this is merely a method used to provide an estimate for the economic analysis.) According to a large direct selling trade organization (Ref. 8), 2.5 percent of direct salespeople are multidistributorships. These numbers suggest that approximately 12,400 (10 million $\times$ .025 $\times$ (7/141)) direct marketers of food would be required to register with FDA. This number may be an overestimate because some of these marketers may already have been counted in the CBP (Ref. 3) or Nonemployer Statistics (Ref. 4) or may distribute food from their private individual residence.

(Comment 170) FDA also received comments stating that there were thousands and thousands of wineries in Europe that may not have been included in the estimate of the number of foreign facilities.

(Response) FDA does not agree with this comment. FDA's estimate includes approximately 27,000 European alcohol producers. FDA did not have enough data to separate wineries from other types of alcohol production facilities.

(Comment 171) One comment stated that FDA had failed to count collectors of wild plants. The comment estimates that there are 100,000 individuals that harvest wild plants.

(Response) Only facilities are required to register with FDA; individuals are not required to register. Harvesters of wild plants that manufacture/process, pack, or hold product in facilities outside of an individual's private residence would be required to register the facility with FDA. FDA does not agree that there are 100,000 harvesters that meet these requirements. FDA commissioned a Dietary Supplement Enhanced Establishment Database (DS–EED) in 1999 (Ref. 14). This database gathered data from the American Business Information (now InfoUSA) electronic database, American Herbal Products Association Membership Directory and Resource Guide, Council for Responsible Nutrition Membership Directory, Harris Inc.'s U.S. Manufacturers Database, Hoovers Corporation Infoseek, National Foods Merchandiser '98–99 Retailer Purchasing Guide August 1998, National Products Expo West, Show Directory, March 1998, Official Establishment Inventory, and Thomas Food Industry Register on the Internet. The DS–EED listed 272 ingredient suppliers. The database may have underestimated the number of ingredient suppliers, but only ingredient suppliers that manufacture/process, pack, or hold product in facilities outside an individual's private residence would be required to register the facility with FDA. Some harvesters of wild plants may already be counted in Census databases, and already be included in the count of facilities. Therefore, FDA estimates that there are an additional 272 harvesters/ingredient suppliers for purposes of this analysis.

(Comment 172) Some comments claim that the number of farms that would fall under FDA's definition of a mixed-type facility is much higher than estimated in the PRIA. Under the proposed definition of manufacturing/processing, which included trimming and washing, the comment suggested that most farms wash, cool, or trim outer leaves and so would be required to register.

(Response) Farms are not required to register with FDA. In this interim final rule, FDA defines ''farm'' as a facility in one general physical location devoted to the growing and harvesting of crops, the raising of animals (including seafood), or both. Washing, trimming of outer leaves of, and cooling produce are considered part of harvesting.

Some facilities located on farms may also manufacture/process, pack or hold food, but not meet the definition for farm and therefore, would be considered mixed-type facilities that are required to register. The farm definition also provides that facilities that pack or hold food, provided that all food used in such activities is grown, raised, or consumed on that farm or another farm under the same ownership are exempt as farms, as are facilities that manipulate food other than washing, trimming outer leaves, or cooling, provided that all food used in such

activities is consumed on that farm or another farm under the same ownership. Some facilities located on farms may manufacture/process, pack, or hold food but not meet the definition of farm and therefore, would be considered mixed-type facilities that are required to register. Activities that would be considered manufacturing/processing include cutting, peeling, trimming, washing, waxing, eviscerating, rendering, cooking, baking, freezing, pasteurizing, homogenizing, mixing, formulating, bottling, milling, grinding, extracting juice, distilling, labeling, or packaging. Farms that mix feed would be considered mixed-type facilities if they manufacture/process feed on the farm with ingredients obtained from another source, and the resulting feed is then sold or transferred for final use offsite.

In the PRIA, FDA considered farms to be mixed-type facilities if they washed, cooled, or trimmed outer leaves. FDA agrees that the PRIA count of mixed-type facilities undercounted these facilities. In the interim final rule, farms that wash, cool, or trim outer leaves are not considered mixed-type facilities, and therefore, the count of mixed-type facilities is unchanged from the count in the PRIA.

To estimate the number of facilities that would be considered mixed-type facilities, FDA used the 1997 USDA National Agricultural Statistics Service Census of Agriculture (Ref. 6), and data obtained from various county level Cooperative Extension Service (CES) offices (Ref. 15). FDA provides an estimate of the number of these mixed-type facilities in table 2. The Census of Agriculture provides the total number of farms producing specific commodities. To estimate the number of farms that are mixed-type facilities, FDA used a sample of counties with information from their respective CES offices. CES offices from Clay County, Kansas; Monterey, Sonoma, Marin, and San Diego counties in California; Jackson County, Wisconsin; Gillespie and San Saba counties in Texas; Carroll County, Maryland; and Berks County, Pennsylvania provide data on the percentage of farms producing specific commodities to be considered mixed-type facilities (Ref. 15). FDA assumes that other commodities, including vegetables (non-organic), other fruits, and wheat, plus feed mixing on poultry and other livestock farms are not mixed-type facilities based on CES interviews (Refs. 15 and 1).

BILLING CODE 4160–01–P

Table 2.--No. of Mixed-Type Facilities

Mixed-Type Facilities			
Type	No. of Facilities	Percent Mixed-Type	No. of Mixed-Type
Pig farms (feed mixing)	46,353	1.5%	695
Cattle (feed mixing)	785,672	1%	7,857
Poultry (feed mixing)	36,944	1%	369
Other animal production (feed mixing)	110,580	1%	1,106
Dairy	86,022	1.1%	903
Grain, rice, and beans	462,877	1%	4,629
Apples	10,872	1.5%	163
Oranges	9,321	1.5%	140
Peaches	14,459	1.5%	217
Cherries	8,423	1.5%	126
Pears	8,062	1.5%	121
Other fruit	29,413	1.5%	441
Nuts	14,500	2%	290
Berries	6,807	1.5%	102
Grapes	11,043	10.5%	1,160
Olives	1,363	3.5%	48
Vegetables and melons	31,030	0.5%	155
Organic vegetables	6,206	50%	3,103
Honey	7,688	50%	3,844
Syrup	4,850	100%	4,850
Herbs	1,776	10%	178
Total			30,497

Tables 3 through 7 provide detailed counts of facilities as included in the preliminary regulatory impact analysis and as revised under the interim final rule. Tables 3 and 4 provide the number of facilities counted from the CBP and Nonemployer statistics, respectively, these counts were unchanged from the PRIA to the final analysis. Table 5 provides revised counts of domestic facilities from sources other than the CBP and Nonemployer statistics, including several revised counts of facility types based on comments. Table 6 provides a breakdown of the count of foreign manufacturers/processors obtained from OASIS, these estimates did not change from the PRIA to the final analysis. Table 7 provides a summary of the counts of domestic and foreign facilities.

Table 3.--Final Count of Domestic Facilities Required to Register From CBP

		PRIA	Revised Count
NAICS Code	Type of Industry	No. of Facilities	No. of Facilities
3111	Animal food manufacturing	1,710	1,710
3112	Grain and oilseed milling	913	913
3113	Sugar and confectionery product manufacturing	1,689	1,689
3114	Fruit and vegetable preserving and specialty food manufacturing	1,796	1,796
3115	Dairy product manufacturing	1,769	1,769
3117	Seafood product preparation and packaging	854	854
3118	Bakeries and tortilla manufacturing	10,644	10,644
3119	Other food manufacturing	2,994	2,994
3121	Beverage manufacturing	2,748	2,748
4224	Grocery and related product wholesale	39,721	39,721
4225	Farm product raw material wholesale	9,546	9,546
4228	Beer, wine, distilled alcoholic beverage wholesale	4,630	4,630
49312	Refrigerated warehousing and storage	945	945
49313	Farm product warehousing and storage	516	516
		80,475	80,475

Table 4.--Final Count of Domestic Facilities Required to Register From Nonemployer Statistics

	Nonemployer businesses	PRIA	Revised count
NAICS Code	Type of Industry	No. of Facilities	No. of Facilities
3111	Animal food manufacturing	642	642
3112	Grain and oilseed milling	287	287
3113	Sugar and confectionery product manufacturing	1,439	1,439
3114	Fruit and vegetable preserving and specialty food manufacturing	2,000	2,000
3115	Dairy product manufacturing	594	594
3117	Seafood product preparation and packaging	693	693
3118	Bakeries and tortilla manufacturing	6,271	6,271
3119	Other food manufacturing	4,725	4,725
3121	Beverage manufacturing	1,608	1,608
4224	Grocery and related product wholesale	32,050	32,050
4225	Farm product raw material wholesale	4,795	4,795
4228	Beer, wine, distilled alcoholic beverage wholesale	2,578	2,578
4931	Warehousing and storage	964	964
		58,646	58,646
	Food contact	9,778	0
		68,424	58,646

BILLING CODE 4160–01–C

TABLE 5.—REVISED COUNT OF DOMESTIC FACILITIES REQUIRED TO REGISTER OF FACILITIES FROM OTHER SOURCES

	PRIA	Revised count
Mixed-type facilities	30,497	30,497
Food contact substances	22,650	0
Transportation holders		33,666
Ingredient suppliers		272
Direct sales marketers		12,400
U.S. outlying islands		315
	53,147	77,150

TABLE 6.—COUNT OF FOREIGN MANUFACTURERS/PROCESSORS REQUIRED TO REGISTER FROM OASIS

Type of product	No. of facilities
Foods	110,392
Food additives	2,979
Color additives	378
Infant formula	235
Vitamins	7,986
Animal feeds	3,330
Medicated animal foods	150
	125,450

TABLE 7.—NO. OF AFFECTED FACILITIES

Domestic facilities:	
CBP	80,475
Nonemployer statistics	58,646

TABLE 7.—NO. OF AFFECTED FACILITIES—Continued

Other sources	77,150
Total domestic	216,271
Foreign facilities:	
Foreign manufacturers/processors	125,450
Percent that will stop exporting	16%
Adjusted number of manufacturers/processors	105,378
Foreign packers and holders	100,027
Total foreign	205,405
Total	421,676

4. Costs

a. *Time estimates.*

In the PRIA, FDA anticipated that it would take four steps for a domestic facility to comply with the regulation: (1) The facility becomes aware of the regulation; (2) the facility learns what the requirements are; (3) an administrative worker fills out the form; and (4) the owner, operator, or agent in charge of the facility confirms the submission is correct. FDA also anticipated that facilities with Internet access that research and register online will have lower registration costs than facilities without Internet access. The interim final rule permits the owner, operator, agent in charge, or an individual authorized by the owner, operator, or agent in charge to submit the registration. Although the owner, operator, or agent in charge is not required to make the actual submission, the owner, operator, or agent in charge is still legally responsible for the registration. Therefore, FDA expects that in cases in which the owner, operator, or agent in charge authorizes an individual to submit the registration on its behalf, the owner, operator, or agent in charge will still take time to confirm that the information on the form is correct before it is submitted to FDA by the authorized individual.

FDA anticipated that foreign facilities would follow the same four steps to comply with the regulation as domestic facilities: (1) The facility must become aware of the regulation, (2) the facility learns the requirements, (3) an administrative worker fills out the form, and (4) the owner, operator, or agent in charge of the facility or the U.S. agent authorized by a foreign facility confirms the submission is correct. In addition, foreign facilities could have fifth and sixth steps to find and then hire a U.S. agent. To estimate the cost of registration for foreign facilities, FDA assumed that they would incur the same per facility costs as domestic facilities, plus additional costs. Similar to domestic facilities, FDA estimated that facilities that research and register electronically would incur lower costs than facilities that do not. Tables 9 through 13 of this document summarize the costs in the PRIA and the revised costs for the interim final rule. Similar to domestic facilities, the interim final rule permits the owner, operator, agent in charge of a foreign facility, or an individual authorized by the owner, operator, or agent in charge to submit the registration. While the owner, operator, or agent in charge is not required to make the actual submission, the owner, operator, or agent in charge is still legally responsible for the registration. Therefore, FDA expects that in cases in which the owner, operator, or agent in charge authorizes an individual to submit the registration on its behalf, the owner, operator, or agent in charge will still take time to confirm that the information in the form is correct before it is submitted to FDA by the authorized individual.

(Comment 173) A number of comments stated that FDA underestimated the time necessary to comply with the proposed rule. One comment provided an estimate of 40 hours to read the proposed rule, submit comments to FDA, implement any final rule internally, and verify registrations of business partners. With 40 percent of these hours managerial time and 60 percent administrative time, the approximate cost was $1,500. The commenter also estimated that additional research for any final rule would require another 4 hours. Another comment estimated that the initial registration would take 3 hours, that managerial expertise would be necessary to gather the information for the registration, and that it would take a manager more than 15 minutes to fill out the form.

Another comment stated that a manager or lead counsel would be responsible for reviewing any final rule and formulating a plan for implementation. This comment estimated that this process would take 10 hours of a manager's time at a cost of $567.40, in addition to 1 hour of an administrative assistant's time. This comment also suggested legal counsel may review the regulation for 5 hours at a total cost of $1,500. Finally, another comment stated it would take 20 hours of staff time to read, comprehend, gather the necessary data, and complete the form. All of the estimates provided in these comments were for facilities with Internet access and workers fluent in English. Several of the comments suggested that FDA increase the time estimates for facilities without Internet access and without staff fluent in English.

(Response) FDA estimated that domestic facilities with Internet access and fluent in English would need, on average, 2 hours to research the regulation and complete and certify the form; domestic facilities without Internet access would need 3 hours. A facility would require approximately 1 or 2 hours, depending on the availability of the Internet, to find the requirements and determine if the facility is required to register, 15 minutes to categorize products and enter them in the appropriate food product categories, 30 minutes to find the remaining registration information and enter it onto the form, and 15 minutes for confirming all the registration information is correct. This estimate is on a per facility, not a per firm, basis. Also, this estimate is approximate; some facilities may require more or less time. FDA anticipates and estimated in the PRIA that firms with multiple facilities will spend 2 hours per facility, if Internet is available, researching and submitting registration information. The facility, or the firm on behalf of the facility, is required to enter the registration data; however, the facility, firm, or an industry or trade group may research the regulation. Firms with many

facilities or industry groups representing hundreds or thousands of facilities submitted all of the comments listed previously.

In the PRIA, a large firm composed of 1,000 facilities would spend 2,000 hours researching and registering all its facilities. Given the estimates provided by the comments, this estimate is likely an overestimate. FDA expects that firms composed of many facilities will have lower per facility registration costs than single-facility firms. Multifacility firms will learn from their experience gained while registering their first facility and will be more efficient at registering additional facilities. Also, the registration system has built-in features that will allow common information to be transferred easily from one facility to another within the same firm. FDA was not able to estimate the reduction in time to register for these multifacility firms on a per facility basis, and so retains its original estimates. However, for this reason, FDA's time estimates are likely overestimates for multifacility firms.

FDA does not anticipate that small facilities will read the **Federal Register**. Instead, they will learn of their obligation to register from trade groups, the press, or FDA outreach efforts, then go to the registration Web site and using the information provided at the Web site, including the interactive features of the registration system, complete and submit their registration. The time estimates included in the economic analysis represent an average facility time estimate across small, medium, and large facilities, and thus, for some individual facilities, the average time estimate will be too high and for some it will be too low. Therefore, FDA did not alter its estimates of the time to complete the registration process.

FDA was persuaded by the comments that managerial staff, rather than administrative staff, would do any necessary research. FDA has re-estimated the analysis using managerial time for researching and administrative time for entering the registration data. Several comments suggested that FDA underestimated the managerial wage, one giving an alternative wage rate of $75 per hour. In the PRIA, FDA used the Bureau of Labor Statistics estimate from the National Compensation Survey (Ref. 16), doubled to include overhead costs. This estimate is an average across many facilities. The higher wage estimate provided was from a very large firm with over 1,000 facilities that FDA would anticipate would have higher wages than most facilities. Therefore FDA did not change its estimate of the average managerial wage.

FDA did not receive any specific estimates of the additional time to register for facilities that lack Internet access and staff who do not speak English. Therefore, because FDA has not increased the base time for registration and has no new information to increase the additional time for foreign language translation or mail submissions, FDA has not increased its estimate of time costs for facilities without Internet access and staff who do not speak English.

(Comment 174) One comment suggested that FDA ignores the effort that will be required of large companies to identify all of the manufacturing and holding facilities covered by the registration requirement. The comment stated that one large supplier might have as many as 1,000 facilities that would have to register.

(Response) FDA included in its cost estimate one hour of research time for each facility to learn about the registration requirements, including whether it needs to be registered. This time may not be used by each facility, but by the firm that registers all its facilities. Multifacility firms are likely to require less time on a per-facility basis than FDA estimates. For a firm with 1,000 facilities, the PRIA estimated the firm would spend 1,000 hours to learn about the registration requirements, which is probably an overestimate of the time required by the firm, as a large, multifacility firm should learn from experience and become more efficient at registering additional facilities.

b. *Other costs.*

(Comment 175) Many commenters were concerned about potential port delays arising from FDA's failure to process registrations in a timely manner, facilities not being aware of the registration requirements prior to shipping food to the United States, or the receiver of the shipment not being aware that the foreign facility is not registered. Commenters mentioned costs associated with port delays including the lost value of perishable goods, storage costs, and the need for larger inventories for domestic facilities that receive imports.

(Response) FDA considered qualitatively in the PRIA potential costs associated with port delays due to foreign facilities not being aware of the registration requirement until their shipment reaches the port. This included costs such as lost value of perishables, storage costs, and transaction costs. Commenters did not provide any quantitative data about the size of these costs. Therefore, FDA has not changed its estimate of port delay costs.

(Comment 176) FDA received a number of comments that FDA underestimated the cost of the proposed rule, because it failed to include time for facilities to write and submit comments.

(Response) The function of the Regulatory Impact Analysis is to measure the costs and benefits of the requirements of the rule. Submitting comments is part of the rulemaking process, not a requirement of the rule. Therefore, FDA did not include in the PRIA costs associated with commenting on the proposed rule.

(Comment 177) FDA received comments stating that registration would require changes in business activities to prevent comingling of product or coding on product to reflect where it was manufactured/processed, packed and held.

(Response) FDA disagrees with this comment. The interim final rule requires all facilities that manufacture/process, pack, or hold food for consumption in the United States to register with FDA. However, the interim final rule does not require any additional labeling of food or restriction of comingling of product.

(Comment 178) FDA received comments that FDA failed to include the cost to facilities of confirming that trading partners are registered.

(Response) FDA did not explicitly include this cost because confirming registrations of trading partners is not a requirement of the interim final rule. However, FDA did include higher costs for foreign facilities to learn about the interim final rule and comply with the requirements, and this includes the higher transaction costs for foreign trading partners. These costs may be borne in part by domestic facilities that inform foreign facilities of the requirement to register.

5. Alternative Options

In the PRIA, FDA considered eight different regulatory options. FDA received many comments that suggested additional options. Suggestions included accepting multiple submissions on a CD–ROM, deleting the requirement to include product categories, different requirements for time allowed to update registrations, different requirements for the U.S. agent, and using other registration systems to gather information for the FDA facility database.

a. *Accept CD–ROM submissions.*

(Comment 179) A number of comments requested that FDA accept multiple registrations on a single submission, such as a specially formatted CD–ROM with the registrations for all the facilities of a

single firm. Comments stated that this would lower the burden of registration, particularly for firms with many facilities, and would improve the accuracy of the registrations.

(Response) The interim final rule allows the submission of multiple registrations on a single CD–ROM. The registrant must use a specially formatted CD–ROM with a PDF version of the registration form. The registrant then enters the facilities' registration information on the CD–ROM and mails the CD–ROM to FDA. FDA will process CD–ROM submission, along with paper submissions, in the order received. CD–ROM submissions will be entered electronically into the registration system. This option will result in additional costs to FDA for processing submissions and training staff to process the submissions. FDA estimates it will take an additional 100–150 hours to develop the automated workflow process for CD–ROM submissions, integrate the process into the existing process, and include the process in the testing phases. At a labor cost of $100 per hour, the total cost for the process control would be approximately $10,000 to $15,000. Additional training costs for staff processing the CD–ROM submissions would be about $8,000 to $10,500. These costs are incorporated into the total FDA cost estimate.

FDA anticipates that this option will lower costs for some large, multifacility firms. Only firms that can lower their costs by using this option will do so. However, FDA does not quantitatively estimate the cost savings.

b. *Food product categories.*

FDA proposed to require the inclusion of food product categories in the registration information. Food product categories are necessary for FDA to communicate directly with subgroups of facilities and to help verify prior notices from facilities that are subject to both registration and the prior notice requirements. FDA estimated that including food product category information in the registration would increase the time to complete each facility's registration by 15 minutes. Including food product categories in the registration form also increases the number of updates facilities will have to submit to FDA.

(Comment 180) FDA received numerous comments stating that including the food product categories as a registration requirement would add to the costs of the rule, without providing any benefits. Some comments stated that the additional 15 minutes for facilities to include food product categories underestimated the time needed to provide this information. Also, large facilities may manufacture/process, pack, or hold thousands of products and determining the food product categories for all these products would be very difficult.

(Response) In responding to these comments, FDA breaks the comments into three categories: (1) The time to research the food product categories for the initial registration, (2) the effect of including food product categories on the frequency of updates, and (3) the benefits of including food product categories. FDA addresses the impact on updates in the section on frequency of updates, and addresses the last category of comments in the benefits section.

FDA does not agree with the comments that suggested FDA underestimated the time to include food product categories as a registration element. For facilities that handle many different types of food, such as warehouses the registration form includes a ''most/all human food categories'' to alleviate the burden of providing information on each specific category of food at the facility. This will allow facilities that handle a large variety of foods to fill out the food product category section of the form very quickly. Also, the electronic registration form includes extensive online help, with descriptions of the food product categories and a link to the FDA product code builder, which will interactively categorize foods. This will simplify identification of the appropriate food product category. For example, pudding is a product that some may believe may be relatively difficult to categorize. On the registration form, it may be unclear to a registrant whether pudding should be characterized as a bakery product/dough/mix/icing or a gelatin/rennet/pudding mix/pie filling. The online registration provides a link to the FDA product code builder, which has a search function. Searching on ''pudding'' gives three possible categories, the two categories already given and baby food, all with drop down menus. By using the drop down menus, a list of products in those categories is provided. The registrant can then find its product in the drop down menu. Moreover, most products, such as alcoholic drinks, fruits, vegetables, and eggs, can simply be characterized by reading the food product categories.

As previously mentioned, most facilities are small and do not produce a large number of products. Therefore, FDA has not altered its 15 minute estimate of the time to fill in the food product categories.

c. *Frequency of updates.*

The proposed rule would have required registered facilities to submit updates or cancellations of their registration information within 30 days of a change in information previously submitted to FDA. The interim final rule changes this requirement to 60 days. Facilities that close or transfer ownership are required to cancel their registrations. New facilities and facilities that change ownership must register. Based on data from the Small Business Administration (Ref. 17), FDA estimated that 10 percent of facilities will cancel registrations and 10 percent of facilities have to submit a new registration each year. FDA also estimated that 20 percent of facilities would have to update their registrations each year. Updates and cancellations were estimated to take 1 hour. First-time registrations in subsequent years were estimated to be as costly as first-time registrations in the first year.

(Comment 181) FDA received many comments about how often facilities will have to update their registrations. As noted, FDA estimated 20 percent of facilities would have to update their registrations each year. Comments provided a number of other estimates of how frequently updates would be required. Multiple comments estimated that 50 percent of facilities would have to update their registrations each year. Other comments did not provide an estimate of how often updates would be required, but suggested that FDA require annual updates. Others commented that facilities would have to update registration information many times a year. Another comment did not provide an alternative estimate of the frequency of updates, but disagreed with the 20 percent per year estimate provided by FDA. Various comments suggested that the most frequently changing components of the registration would be the name of the emergency contact and, if ''trade name'' were defined broadly, it would be the most frequently changing registration information element.

Some comments suggested including food product categories in the registration would lead to monthly registration updates. Comments stated that there is constant fluctuation in the nature of products produced at large facilities, which would require frequent updates. One comment suggested that one in four large facilities that manufacture/process food would have to submit updates each month. Comments stated that the cost of maintaining the food product categories would exceed the cost of the initial registration.

Comments most frequently suggested that FDA require updates every 6 to 12

months or annually. However, some comments suggest that to allow update periods longer than 30 days would reduce the usefulness of the database.

(Response) As stated in the definitions section of this rule, trade names mean the terms under which the facility conducts business, or additional names by which the facility is known. Trade names are terms associated with the facility, as opposed to brand names, which are terms associated with products. Therefore, comments that stated that names associated with products change frequently, which would result in the need for frequent updates, overestimate the frequency with which facilities will have to update their registrations because brand names are not included as an element of registration. FDA has also removed the requirement that an individual be identified as the emergency contact, another registration element that commenters mentioned was likely to change frequently.

FDA does not agree that the cost of updates resulting from changes in product lines will require facilities to submit monthly updates. Some types of facilities, such as warehouses or wholesalers, are likely to select the most/all human food category due to the large variety of products handled at the facility. Manufacturers/processors are the most likely facilities to have frequent changes in product lines. However, the majority of these facilities are small. The 18,259 manufacturers in the Nonemployer Statistics have only 1 employee, and due to their small size, should not have frequent changes in product lines. In the CBP data, 80 percent of the 29,149 manufacturers have fewer than 50 employees. It is unlikely facilities of this size will produce many different product lines and that these product lines will change frequently. This leaves a small number, approximately 3,700 large manufacturers, that may have more frequent changes in product lines. Also, the product categories included in the registration form include many individual products; thus, a product line change may not change the food product category. For example, a facility may change pudding flavors or the level of fat in the pudding without changing food product categories.

FDA does agree with the comments that the frequency of updates will be greater than estimated in the PRIA. FDA has re-estimated the frequency with which updates will occur for 60-day updates by using the suggested frequency of updates in the comments for the 30-day update period. For large manufacturing/processing facilities, FDA has used the estimate provided by some commenters that one in four facilities would have to submit an update each month with a 30-day update period. Large manufacturing/processing facilities would then submit two updates per year with a 60-day update period, rather than 3 times per year with a 30-day update period. For other facilities, FDA has used the estimate that 50 percent of facilities would have to update each year (or facilities would update once every 2 years) with a 30-day update. FDA assumes that the number of updates will still be once every 2 years with a 60-day requirement for updates. A weighted average of the two estimates gives 55 percent of facilities updating each year. FDA has also applied this estimate for domestic facilities to foreign facilities.

FDA has also considered an alternative option in which facilities are required to update their registration within a year of a change. FDA assumes that for facilities that are not large manufacturers/processors, updates by 50 percent of facilities per year is equivalent to one change every 2 years. Under this approach, the frequency of updates for facilities that are not large manufacturers/processors would still be 50 percent of facilities each year, but no updates would occur in the first year. Large manufacturers/processors would have to update once a year, with no updates the first year. Without incorporating zero updates in the first year, adopting this option would give a weighted average of 51 percent of facilities updating each year. To incorporate the lack of updates for the first year, we included zero updates for 1 year in 20 years of the registration system. This lowers the average for percent of facilities submitting updates each year to 48 percent. See tables 11 and 12 of this document for cost estimates for these options.

FDA also considers an option in which facilities are not required to include food product categories in their registrations. FDA estimates that it would take only 45 minutes to fill out and certify the registration form and that 50 percent of all facilities would have changes in their registration information each year.

Comments received in response to the proposed rule assumed that changes in optional elements would result in updates. In the interim final rule, FDA does not require a facility to update its registration when changes occur in optional items. FDA does not have information to adjust the estimates of frequency of update in response to changes in optional information. However, FDA does believe that the estimate of frequency of updates is an overestimate, as it is based on changes in both optional and required information.

d. *U.S. agent.*

The Bioterrorism Act and the interim final rule require that all foreign facilities required to register have a U.S. agent. The interim final rule requires the U.S. agent to be a person residing or maintaining a place of business in the United States, whom the owner, operator, or agent in charge of a foreign facility designates as its agent. FDA will recognize only one U.S. agent for purposes of registration per foreign facility. The U.S. agent acts as a communications link between FDA and the facility and FDA considers providing information to the U.S. agent the same as providing information directly to the foreign facility. A U.S. agent may submit a registration to FDA, if the owner, operator, or agent in charge of the foreign facility authorizes the U.S. agent (if an individual) to register on behalf of the owner, operator, or agent in charge of the facility.

U.S. Agent Assumptions

In the PRIA, FDA assumed, based on preliminary comments, that some foreign facilities already have a U.S. representative that can function as a U.S. agent. The U.S. representative may be a business partner, broker, U.S. lawyer, or parent company. FDA assumes that the likelihood that a foreign facility has an existing U.S. agent is related directly to the quantity of product the foreign facility exports to the United States.

FDA used data from OASIS on the average number of line entries and the average number of manufacturers by country and product code to estimate the number of line entries for foreign manufacturers (Ref. 2). A shortcoming of these data is that entries are by product code, thus, manufacturers that are exporting products in more than one product code are in the count of manufacturers for every product code in which they export. The OASIS data consequently have approximately twice as many manufacturers as actually exist. To adjust for this double-counting, FDA assumed the average foreign manufacturer exports in two product categories. To find an approximate number of line entries per manufacturer, FDA divided the total number of manufacturers into the total number of line entries for each country and applied the average number of line entries per manufacturer to all the manufacturers from that country. This method will underestimate the number of very small and very large

manufacturers, because it removes the variation in number of line entries exported from countries with a large number of manufacturers exporting to the United States.

To estimate the number of foreign facilities that would have to hire a U.S. agent, FDA assumed that foreign facilities that export more than 80 line entries each year into the United States, or 10 percent of foreign manufacturers, already have a U.S. representative who can function as a U.S. agent. FDA acknowledges that this is an uncertain estimate; the true number of facilities that have an existing business representative that would be willing to serve as their U.S. agent may be much higher. FDA will test the impact of overall U.S. agent costs under different assumptions.

For foreign facilities that do not have an existing business representative willing to act as their U.S. agent for little or no extra cost to the U.S. agent or facility, FDA estimated it would take between 5 and 15 hours to hire a U.S. agent, depending on whether the facility had Internet access and its personnel were fluent in English. Additionally, FDA estimated an annual U.S. agent fee of $1,000 per year, based on estimates of agent fees provided by U.S. agents for other FDA-regulated products. This estimate of the U.S. agent fee contemplates that the U.S. agent will register the foreign facility. If the foreign facility chooses to register on its own behalf, the U.S. agent fee may be lower; however, the facility itself will have higher costs associated with registering. These costs include time to enter the registration information, translate the registration information if the facility is not fluent in English, and additional time for mailing a postal registration if the facility does not have Internet access.

FDA acknowledges that these assumptions are uncertain. Accordingly, as explained more fully in the following paragraphs, FDA provides alternative assumptions regarding U.S. agent fees, based on U.S. agents currently proffering their services as U.S. agents for the purposes of the Bioterrorism Act. In general, current prices for other U.S. agent activities (such as serving as a U.S. agent for drug or device foreign establishments) and published prices for an emerging market may not be precise predictors of the actual prices charged for this service.

FDA also assumed that the 16 percent of manufacturers that are exporting 10 or fewer line entries to the United States would stop exporting to the United States, rather than incur the expense of registering, hiring a U.S. agent, and providing prior notice under 21 CFR part 1, subpart I. FDA includes the effect of prior notice on foreign facilities ceasing trade with the United States, because both will represent an increase in the cost of importing to the United States. FDA is unable to separate the effects on foreign facilities ceasing to export to the United States and so considers them both here. These estimates are also uncertain as the value of and the return on food shipments are variable and the cost for an individual food facility to comply with the Bioterrorism Act regulations is uncertain. Some facilities may ship very few shipments to the United States each year, but may earn a very high return; these facilities will likely continue to export to the United States. Conversely, some facilities may ship many, low value, low return shipments to the United States and may stop exporting to the United States as a result of the regulations under the Bioterrorism Act. Foreign facilities may also have existing business relationships with facilities in the United States. If a domestic facility is willing to absorb the cost of registering and providing U.S. agent services to a foreign facility, the facility may continue to export to the United States. In the proposed rule, FDA requested comments on these assumptions. No comments provided quantitative estimates of the number of facilities that would stop exporting or that already have U.S. agents. These estimates are uncertain, as the value of and the return on food shipments are variable and the cost for an individual facility to comply with the Bioterrorism Act regulations is uncertain. Some facilities may ship very few shipments to the United States each year, but may earn a very high return; these facilities will likely continue to export to the United States. Conversely, some facilities may ship many, low value, low return shipments to the United States and stop exporting to the United States as a result of the regulations under the Bioterrorism Act. In the proposed rule, FDA requested comments on these assumptions. No comments provided quantitative estimates of the number of facilities that would stop exporting or that already have U.S. agents. Table 8 presents average numbers of line entries and the percent of foreign manufacturers that export that number.

If 16 percent of foreign manufacturers/processors do choose to cease exporting to the United States, the total effect on trade will be much smaller than 16 percent. The facilities projected to cease exporting to the United States represent a small fraction of total trade. The 16 percent of facilities represents approximately 20,000 facilities exporting between 1 and 10 line entries to the United States each year. If, on average, each would have exported 5 line entries, the total number of line entries affected would be approximately 100,000, which is less than 2 percent of all lines.

BILLING CODE 4160–01–P

Table 8.--Average number of line entries from foreign manufacturers

Average number of line entries	Percent of total number of foreign manufacturers	Cumulative percent of manufacturers
1-10	15.81	15.81
11-20	25.43	41.24
21-40	32.27	73.51
41-60	7.30	80.81
61-80	5.88	86.69
81-100	3.64	90.33
101-120	1.78	92.11
121-140	0.72	92.83
141-160	1.59	94.42
161-180	0.48	94.90
181-200	0.83	95.73
>200	4.27	100.00

BILLING CODE 4160–01–C

(Comment 182) FDA received many comments on requiring U.S. agents for foreign facilities required to register with FDA. Comments centered around five issues: (1) The role of the U.S. agent, (2) the cost of a U.S. agent, (3) facilities choosing to cease exporting to the United States, (4) alternatives suggested to the proposed U.S. agent requirements, and (5) the benefits of requiring a U.S. agent. The benefits of a U.S. agent are addressed in the benefits section VI.C of this document; the remaining comments are summarized and responded to in the following paragraphs.

Many comments were unclear about the role of the U.S. agent. A common misperception was that the U.S. agent must be the importer or broker the facility works with and that the facility would not be able to import through other brokers. Another common misperception was that the U.S. agent was required to have information about all the food products the facility exports to the United States.

(Response) FDA believes that many foreign entities did not correctly understand the role of the U.S. agent and how narrow are the U.S. agent's responsibilities. The U.S. agent may be an importer or broker if the facility chooses; however, the only requirement for a U.S. agent in the proposed and interim final rule is that the U.S. agent reside or maintain a place of business in the United States. In this rulemaking, FDA does not place any new restrictions on foreign facilities using import brokers, which may have been the source of some of the confusion regarding the true impact of the agent requirement. The U.S. agent is also not expected to have information about all the shipments a facility sends to the United States. The U.S. agent's responsibility is to be able to contact the facility and pass on information from FDA in both emergencies and routine operations. A U.S. agent may also register with FDA on behalf of the facility, if the facility so chooses. The U.S. agent is considered to be the facility's emergency contact, unless the facility designates an alternative contact in accordance with § 1.233(e). Therefore, FDA does not include any costs due to changes in business practices, such as using a single broker.

(Comment 183) FDA also received comments about costs of the U.S. agent. One comment states that the costs of requiring a U.S. agent were underestimated by a factor of 5 to 10. However, this comment provides no basis for this cost estimate. Many comments also state that most facilities do not already have a U.S. agent and would incur costs to procure a U.S. agent. Finally, some comments state that FDA should include the cost of a legal agreement between the foreign facility and the U.S. agent.

(Response) FDA does not require a legal agreement between the U.S. agent and the foreign facility, but the estimated total cost for foreign facilities does include the costs of finding and hiring a U.S. agent.

FDA agrees that many facilities do not already have a U.S. agent. In the PRIA, FDA estimated that more than 90 percent of foreign facilities do not currently have a U.S. agent. Again, if more than 10 percent of foreign food facilities already have a relationship to a domestic entity that could serve as an equivalent to the role of the U.S. agent as required in this interim final rule, the impact of this rulemaking would be lower. FDA tests the sensitivity of this estimate in the following paragraphs.

In the PRIA, FDA estimated that foreign facilities currently without a U.S. agent would require 5 to15 hours to find an agent and would pay an annual fee of $1,000. FDA's estimate of the U.S. agent fee was based on the fees charged by U.S. agents for other FDA regulated products with similar responsibilities to those required in the proposed rule. Therefore, given the foundation for the fees cited in the PRIA and the lack of evidence for higher fees, FDA does not increase its estimate of the U.S. agent fee.

No comments suggested that FDA overestimated the fee that would be charged by a U.S. agent. The $1,000 fee estimated in the proposed rule was an estimate of an average fee for a U.S. agent under other FDA regulations, based on fees quoted over the phone and Internet advertisements. However, since publication of the proposed rule, a number of companies have begun Internet advertising of their services as a U.S. agent for foreign food facilities that are required to register with FDA. These companies specify a range of costs, some with discounts for multiple facilities under the same ownership or fees that are a function of the number of shipments each year or additional fees for registration updates. Based on the requirements in the proposed rule, the lowest fee quoted was $399 for representation by a U.S. agent for 1 year; other U.S. agents charged initial fees between $599 and $1,400 (Ref. 18). Many of the U.S. agents intend to charge fees for additional registration-related services, such as registration updates or cancellations. Based on these new estimates of fees, FDA believes that $1,000 still represents a reasonable estimate of a U.S. agent fee. Ultimately, the fee that a foreign facility will pay to hire and retain a U.S. agent will be a function of several factors; whether the facility has Internet access, whether its employees are fluent in English, whether it has existing relationships with potential U.S. agents, and individual facility preferences.

Sensitivity Analyses

Many facilities will choose lower-priced U.S. agents; therefore, FDA presents an estimate of the cost of the rule with a U.S. agent fee of $700. In this situation, the total first year cost for foreign facilities would be $247.6 million and annual costs would be $164.5 million. In addition, the assumed number of entities that would no longer export to the United States would fall under this scenario; if U.S. agent costs are lower, it would continue to make economic sense for a larger number of foreign facilities to continue importing into the United States. FDA does not provide an estimate of the decrease in the number of facilities that will cease exporting to the United States.

FDA also considers a higher U.S. agent cost of $1,200. This represents the higher range of Internet estimates; however, fees offered by facilities over the Internet may not represent the full range of U.S. agent fees. Also, foreign facilities that do not have Internet access or are not fluent in the languages commonly used in trade may face higher fees. This gives a first year cost of $345.0 million and annual costs of $271.7 million.

As discussed previously, the assumption that 10 percent of foreign facilities have an existing relationship that is equivalent to a U.S. agent is uncertain. FDA considers as an alternative assumption that those facilities that export 40 or more line entries per year, or 26 percent of facilities, already have a business partner in the United States that serves the function of a U.S. agent and the foreign facility will only incur the costs of registering. This lowers that cost to foreign facilities to $283.9 million in the first year and $209.7 in future years.

Alternatively, FDA considers that only facilities that export more than 120 line entries per year, or 8 percent of facilities have a U.S. business partner that will fulfill role of the U.S. agent. This will increase the cost to foreign facilities to $308.8 million in the first year and $231.2 million, annually.

Given the uncertainty surrounding the percent of facilities that will stop exporting to the United States, FDA also considers two alternative options. Eight percent stop exporting and 24 percent stop exporting. If eight percent of foreign facilities that ship very small numbers of line entries to the United States each year stop exporting to the United States, then the quantified cost of the interim final rule will increase to $320.4 million per year and $239.4 million in subsequent years. However, this estimate does not account for a decrease in the nonquantified costs. Foreign facilities that stop exporting to the United States due to the Bioterrorism Act regulations will earn lower returns on their product because they will shift to a market with a lower return. Additionally, domestic facilities that receive product from these facilities will not incur costs to find new suppliers. Alternatively, if facilities that ship 20 or fewer line entries per year to the United States, or 24 percent of facilities, stop exporting, the quantified costs will decrease to $291.7 million in the first year and $218.2 million in subsequent years. However, the increase in nonquantified costs will offset these cost savings.

FDA considers the total cost for foreign facilities under the combination of lowest and highest cost alternatives. The lowest cost combination gives a total cost of $220.5 million for the first year and $144.6 million in subsequent years. The highest cost combination gives a total cost of $364.6 million in the first year and $267.4 million annually.

Distribution of Costs

FDA has chosen to use the facility as its unit of analysis for two reasons: (1) The Bioterrorism Act requires registration on a facility basis, and (2) most information available to FDA is at the facility level. For these reasons, costs are reported as average per facility costs and total costs for facilities. However, FDA expects that all of the costs will not be borne by the facilities. Economic theory shows that, in the case of new costs, a portion of the costs will be borne by the producer and a portion by the consumer. In this case, the costs may be spread among the foreign facility, importers, exporters, domestic food producers and distributors, and consumers. However the costs are distributed, the total social cost of the rule will be unchanged. Although the distribution of these costs is uncertain, the total cost of submitting a facility's registration and U.S. agent services are both costs of the requirements of this interim final rule for foreign facilities. FDA requests comments on the distribution of costs between submitting registrations and other services offered by the U.S. agent and comments on the overall cost of hiring and retaining a U.S. agent and the assumptions underlying FDA's estimates of these costs.

Table 9.--Sensitivity analysis of foreign facility costs (in millions)

Alternative U.S. agent costs	First year costs	Annual costs
Baseline estimate	$306.0	$228.8
U.S. agent fee of $700	$247.6	$164.5
U.S. agent fee of $1200	$345.0	$271.7
26% already have a U.S. agent	$283.9	$209.7
10% already have a U.S. agent	$310.2	$232.4
8% already have a U.S. agent	$308.8	$231.2
8% stop exporting	$320.4	$239.4
24% stop exporting	$291.7	$218.2
Lowest estimate	$220.5	$144.6
Highest estimate	$364.6	$267.4

(Comment 184) Several comments predict that some foreign facilities would cease exporting to the United States due to the cost of procuring a U.S. agent. Comments mention this as a cost to both foreign facilities and domestic facilities. For foreign facilities that ship small quantities to the United States, some comments assert that the cost of a U.S. agent could exceed the profits from shipping to the United States. For these facilities, it would make economic sense to stop exporting to the United States. Other comments assert that some domestic facilities, particularly small businesses, might lose important suppliers. These comments state that the loss of foreign suppliers could have a significant negative impact on their businesses. FDA also received comments on the effect of requiring a U.S. agent on domestic small businesses.

(Response) FDA agrees that some foreign facilities may choose to stop exporting to the United States because the cost of registering and procuring a U.S. agent will exceed the benefits to the facility of exporting food to the United States. As mentioned previously, the number of foreign facilities that will choose to stop exporting to the United States is uncertain, as it will depend on the cost of registration for the individual facility and the return on the shipment in the United States versus its return in other markets. No comments provided any quantitative estimates of the number of facilities that would stop exporting to the United States. These costs were included qualitatively in the PRIA. The effect of requiring a U.S. agent on domestic small businesses will be considered in the Regulatory Flexibility Analysis.

(Comment 185) Several alternatives to the proposed requirement for a U.S. agent are suggested by commenters, including making the U.S. agent requirement optional, requiring a U.S. agent only if the facility does not have an e-mail contact, and requiring that the U.S. agent reside or maintain a place of business in North America.

(Response) FDA is constrained by the Bioterrorism Act, which requires all foreign facilities subject to this rule to have a U.S. agent. Also, FDA believes that the statute requires that the U.S. agent reside or maintain a place of business in the U.S. proper, not North America generally. Therefore, choosing not to require a U.S. agent or having the person reside or maintain a place of business outside the United States is not consistent with congressional intent. However, while not a legally available option, FDA does provide an estimate of the cost for an option in which a U.S. agent is not required.

e. *Duplicate requirements with other licensing or registering authorities.*

(Comment 186) FDA received many comments that the registration requirement duplicates other registration requirements for FDA, other U.S. government agencies, other governments, and State and local authorities. These comments suggest that FDA obtain the registration information from these other authorities rather than require an additional registration. Specific registration requirements mentioned by commenters included FDA low acid canned foods, FDA feed manufacturers, FDA seafood Hazard Analysis and Critical Control Point importers, TTB, EPA, USDA, Australia, Iceland, New Zealand, Chile, California, and FIRMS.

(Response) FDA has determined that it is most cost-effective for FDA to require registration by all affected facilities under this rule. Using data from other registration systems would be cost-effective, if FDA could collect the data from other systems at a total lower cost, to both facilities and FDA, than original collection of the data. For FDA to use another regulatory agency's registration system, FDA needs to: (1) Be able to get the data from the other agency; (2) capture all of the required information; (3) avoid duplicate registrations; (4) verify that the data are correct; (5) update the registration in a timely manner; and (6) issue a new registration number and confirmation to the registered facility.

Using other registration systems would likely increase costs for FDA to get the data from the other system. This would require interagency cooperation and compatibility of IT systems by the statutory deadline of December 12, 2003. In addition to creating the existing IT system, FDA would have to develop the ability to accept large transfers of data from other systems. Additionally, accepting data from other registration systems will require facilities to provide any data elements not included in those registration systems to FDA separately, which will also result in higher costs for FDA.

Using other registration systems would not lower the cost of registration for covered facilities. Even if another registration system is used, facilities will still incur research costs to learn about the registration requirements to determine whether they need to register or if they had already fulfilled the requirements, so research costs for facilities will be unchanged under both

systems. Costs for submitting the data will be different if other registration systems are used. For the costs of accepting duplicate registrations to be lower for facilities, the alternate registration system must include all the data elements required by the FDA registration. The system that initially seemed most likely to match FDA's requirements and most frequently mentioned in comments involved the permit requirements applicable to the alcohol beverage industry under laws enforced by TTB. FDA met with TTB to determine whether it was feasible to use TTB's basic permit system. FDA and TTB determined that TTB's regulations do not apply to all facilities required to register under this interim final rule. For example, the laws administered by TTB do not require foreign alcohol beverage producers to obtain permits, unless they are also engaged in the business of importing alcohol beverages into the U.S. FDA and TTB also determined that several of the required data elements for FDA registration are not mandatory information for alcohol beverage permittees, including some of the emergency contact information required by this interim final rule. Accordingly, even facilities with TTB permits would still have to file immediately a registration update with FDA to provide missing data elements. FDA concluded that accepting registrations in alternative registration systems would not lower costs for facilities. If accepting registrations does not lower costs for FDA or for facilities, it is not a cost-effective alternative.

FDA assumes that if original data collection is not cost-effective for domestic facilities, it will be less cost-effective for foreign facilities, because foreign facilities will still have to obtain a U.S. agent and submit to FDA the information for their U.S. agent.

f. *FDA costs.*

FDA costs include creating and maintaining a database, processing paper submissions, and sending an annual mailing to registrants. Developing and maintaining a database includes automatically entering registrations into the database that arrive electronically and sending an electronic receipt and facility registration number back to the registrant. FDA estimates that four full-time equivalent employees (FTEs) will be needed to oversee the database. Additionally, paper submissions (*i.e.* those received by mail, fax, or on CD–ROM) will have to be entered manually. Costs are presented for the first 5 years of the system in table 9 of this document. Annual costs are discounted at 7 and 3 percent. No comments were received on FDA's cost estimates in the PRIA. However, cost numbers were revised based on new information obtained by FDA.

Tables 10 through 12 provide details of the components of total costs for FDA, domestic facilities, and foreign facilities. For tables 11 and 12, FDA provides the estimate of the costs from the PRIA, and from 4 options; the interim final rule, the interim final rule with longer updates, the interim final rule without product categories, and the interim final rule with no U.S. agent requirement. Details of the costs that have not changed in response to comments may be found in the proposed rule. Tables 13 and 14 summarize the total costs over the first four years and provide a present value for a 20 year horizon for a 7 percent and 3 percent discount rate, respectively. FDA acknowledges uncertainty in these estimates; please see the proposed rule for a fuller discussion of all sources of uncertainty, and the discussion and sensitivity analysis under comment 192 regarding the uncertainty of the U.S. agent estimate.

BILLING CODE 4160–01–P

Table 10.--FDA Costs

FDA Costs	Year One	Year Two	Year Three	Year Four	Year Five
Development/modification/enhancement	$8,200,000	$3,000,000	$3,300,000	$2,300,000	$2,300,000
Maintenance/steady state	$1,560,000	$3,500,000	$4,300,000	$4,300,000	$4,300,000
Number of FTEs	4	4	4	2	2
Cost per FTE	$97,000	$97,000	$97,000	$97,000	$97,000
Processing paper submissions	$2,900,000	$1,600,000	$1,600,000	$1,600,000	$1,600,000
Mailing costs	$180,000	$35,000	$35,000	$35,000	$35,000
New hardware	$0	$0	$0	$650,000	$0
Total	$13,228,000	$8,523,000	$9,623,000	$9,079,000	$8,429,000
Total discounted at 7%	$13,228,000	$7,965,000	$8,405,000	$7,411,000	$6,430,000
Total discounted at 3%	$13,228,000	$8,275,000	$9,071,000	$8,309,000	$7,489,000

Table 11.--Computation of Costs for Domestic Facilities

	Proposed	Interim Final	Longer Updates	No Product categories	No U.S. Agent
Number of domestic facilities	202,046	216,271	216,271	216,271	216,271
Time to research requirements with Internet (hours)	1	1	1	1	1
Time to research requirements without Internet (hours)	2	2	2	2	2
Time to complete the form (hours)	1	1	1	1	1
Percent of facilities with Internet	71%	71%	71%	71%	71%
Manager wage (hourly)	$56.74	56.74	56.74	56.74	56.74
Administrative wage (hourly)	$25.10	25.1	25.1	25.1	25.1
First year domestic costs	$13,200,000	$23,000,000	$23,000,000	$21,600,000	$23,000,000
Annual facility costs					
Percent of businesses going out of business	10%	10%	10%	10%	10%
Percent of businesses entering	10%	10%	10%	10%	10%
Percent of businesses with changes	20%	55%	48%	50%	55%
Time to update or cancel registration (hours)	1	1	1	1	1
Annual facility costs	$3,300,000	$6,900,000	$6,400,000	$6,400,000	$6,900,000

Table 12.--Computation of Costs for Foreign Facilities

	Proposed	Interim Final	Longer Updates	No Product Categories	No U.S. Agent
Number of foreign holders and packagers	100,027	100,027	100,027	100,027	100,027
Number of foreign facilities manufacturers/ processors	125,450	125,450	125,450	125,450	125,450
Percent of facilities stops exporting	16%	16%	16%	16%	16%
Total facilities	205,405	205,405	205,405	205,405	205,405
Speaks English	16%	16%	16%	16%	16%
Has Internet access	31%	31%	31%	31%	31%
Has U.S. Agent	10%	10%	10%	10%	10%
Hourly wage rate	$25.10	$25.10	$25.10	$25.10	$25.10
Time to find agent (hours)	5	5	5	5	0
Additional time to find a U.S. agent if not fluent in English (hours)	5	5	5	5	0
Additional time to find a U.S. agent without Internet access (hours)	5	5	5	5	0
Agent fee (annual cost)	$1,000	$1,000	$1,000	$1,000	$0
Time to research requirements (hours)	1	1	1	1	1
Additional time to research requirements if not fluent in English (hours)	5	5	5	5	5
Additional time to research requirements without Internet access (hours)	5	5	5	5	5
Time to complete the form (hours)	1	1	1	0.75	1
Additional time to complete if not fluent in English (hours)	0	0	0	0	1
Additional time to submit registration without Internet access (hours)	0	0	0	0	1
Total first year costs	$306,000,000	$306,000,000	$306,000,000	$304,800,000	$73,100,000
Annual costs					
Agent fee	$1,000	$1,000	$1,000	$1,000	$0
Percent of businesses going out of business	10%	10%	10%	10%	10%
Percent of businesses entering	10%	10%	10%	10%	10%
Percent of businesses with changes	20%	55%	48%	50%	55%
Total annual costs	$227,000,000	$228,800,000	$228,500,000	$228,400,000	$10,600,000

Table 13.--Summary of Costs (in Millions) Discounted at 7 Percent

	Interim Final	Longer Updates	No Product Categories	No U.S. Agent
Domestic first year costs	$23.0	$23.0	$21.6	$23.0
Foreign first year costs	$306.0	$306.0	$304.8	$73.1
FDA first year costs	$13.2	$13.2	$13.2	$13.2
Total first year costs	$342.2	$342.2	$339.6	$109.3
Domestic second year costs	$6.5	$6.0	$6.0	$6.0
Foreign second year costs	$213.8	$213.5	$213.5	$10.0
FDA second year costs	$8.0	$8.0	$8.0	$8.0
Total second year costs (7% discount)	$228.3	$227.5	$227.5	$24.0
Domestic third year costs	$6.0	$5,6	$5.6	$6.0
Foreign third year costs	$199.8	$199,5	$199.5	$9.0
FDA third year costs	$8.4	$8.4	$8.4	$8.4
Total third year costs	$214.2	$213.5	$213.5	$23.4
Domestic fourth year costs	$5.6	$5.2	$5.2	$6.0
Foreign fourth year costs	$186.8	$186.4	$186.4	$9.0
FDA fourth year costs	$7.9	$7.9	$7.9	$7.9
Total fourth year costs	$200.3	$199.5	$199.5	$22.9
Present value	$2,942.0	$2,932.0	$2,928.0	$398.0

Table 14.--Summary of Costs (in Millions) Discounted at 3 Percent

	Interim Final	Longer Updates	No Product Categories	No U.S. Agent
Domestic first year costs	$23.0	$23.0	$21.6	$23.0
Foreign first year costs	$306.0	$306.0	$304.8	$73.1
FDA first year costs	$13.2	$13.2	$13.2	$13.2
Total first year costs	$342.2	$342.2	$339.6	$109.3
Domestic second year costs	$6.7	$6.0	$6.2	$7.0
Foreign second year costs	$222.1	$221.7	$221.7	$10.0
FDA second year costs	$8.3	$8.3	$8.3	$8.3
Total second year costs (7% discount)	$237.1	$236.0	$236.2	$25.3
Domestic third year costs	$6.5	$6.0	$6.0	$7.0
Foreign third year costs	$215.7	$215.3	$215.3	$10.0
FDA third year costs	$9.1	$9.1	$9.1	$9.1
Total third year costs	$231.2	$230.4	$230.4	$26.1
Domestic fourth year costs	$6.3	$5.9	$5.9	$6.0
Foreign fourth year costs	$209.3	$209.0	$209.0	$10.0
FDA fourth year costs	$8.8	$8.8	$8.8	$8.8
Total fourth year costs	$224.4	$223.7	$223.7	$24.8
Present value	$3,992.0	$3,976.0	$3,972.0	$512.0

6. Benefits

In the PRIA, FDA asserted that requiring registration of manufacturers/processors, packers, and holders of food would aid in deterring and limiting the effects of foodborne outbreaks in four ways. One, by requiring registration, persons who might intentionally contaminate the food supply would be deterred from entering the food production chain. Two, if FDA is aware of a specific food threat, a registration database would make FDA better able to inform the facilities potentially affected by the threat. Three, FDA would be able to deploy more efficiently its domestic compliance and regulatory resources. Four, FDA inspectors, using prior notice and registration, would be better able to identify shipments for inspection.

Registering with FDA creates a paper trail, which would, even if the information in the registration were falsified, provide evidence that could link the registration to the false registrant. Persons who might attempt to intentionally contaminate the U.S. food supply would be deterred, by the creation of additional evidence that might be used against them, from starting a business in the food supply chain. Persons who might intentionally contaminate the food supply but refuse to register would be subject to criminal and civil sanctions and, if foreign, would risk having their product held at

a U.S. port. With emergency contact information and product categories, FDA can quickly call or e-mail the emergency contact at both domestic and foreign facilities that may be targeted by a specific food threat. If FDA suspects a particular product is at risk, we can quickly identify which facilities to contact. This quick communication will allow facilities to respond quickly to a threat and possibly limit the effect of a deliberate strike on the food supply, as well as public health emergencies due to accidental contamination of food. In the past, FDA field personnel (Ref. 19) have had difficulty notifying facilities of recalls and other enforcement actions due to incomplete information in existing agency records. In the past, for foreign facilities, FDA has attempted to disseminate recall information through foreign embassies. Contacting foreign facilities through their U.S. agent (or their designated emergency contact) will be more efficient and increase the probability that the facility will receive the information in a timely fashion and act on it.

A complete list of facilities in the food supply chain will also aid FDA in scheduling inspections and undertaking compliance activities. FDA currently uses an OEI that we developed by obtaining lists from State governments and adding firms to the OEI through surveillance activities, such as reviewing phone books. The OEI is incomplete and frequently out of date (Ref. 20). FDA has even less information about foreign facilities that manufacture/process, pack, or hold food for consumption in the United States. A complete list of domestic facilities with correct contact information and food product categories would aid inspectors in contacting facilities, and with product information available, would help the agency to identify facilities for inspections. Because of the turnover in the food industry and the ratio of inspectors to food facilities, FDA never has had a complete list of foreign or domestic facilities that provide food for consumption in the United States. Also, a complete list of facilities will aid FDA in understanding which facilities will be affected by a future regulation, which will increase the agency's effectiveness in targeting communication and outreach to these facilities.

In conjunction with the prior notice requirements in part 1, subpart I, this rule will make it possible for FDA to better identify imported food shipments that require inspection prior to admission. The registration will confirm the identity of the country of production, which may not be the same as the country from which the product has been shipped. This information will assist FDA in identifying specific shipments to inspect, if, for example, we have information that a particular type of food or shipments from a particular country may be adulterated. Additionally, the database of registrants and products also will aid FDA in verifying that a product is correctly identified by where and by whom it was produced. For example, if the registration information identifies a facility as producing only dairy products and FDA receives a prior notice purportedly from the facility for a shipment identified as nuts, FDA can decide whether to target that shipment for verification based on the discrepancy.

FDA has conducted its own evaluation of the vulnerability of the U.S. food supply and has also commissioned two threat assessments, one through the Batelle Memorial Institute and a second through the Institute of Food Technologists. These assessments determined the most serious risks of intentional contamination during various stages of food production and distribution. The results of these assessments are classified. We have also received intelligence information regarding threats to the food supply that are guiding our food security efforts. However, to understand possible costs of an intentional strike on the U.S. food supply, FDA presents in table 15 outbreaks resulting from accidental and deliberate contamination, involving both domestic and imported foods. These outbreaks do not represent all possible forms that a terrorist attack might take, but merely illustrate the public health costs of foodborne emergencies. It is likely that an intentional attack on the food supply that sought to disrupt the food supply and sicken many U.S. citizens would be more costly. However, the probability of an attack occurring and the exact reduction in risk resulting from registration is unknown.

Table 15.--Summary of Five Foodborne Outbreaks

Pathogen	Location and Year	Vehicle	Confirmed or Reported Cases	Estimated Number of Cases	Total Illness Cost
Salmonella enteritidis (Ref. 20)	Minnesota, 1994	Ice cream	150 cases, 30 hospitalized	29,100 in Minnesota 224,000 Nationwide	$3,187,700,000 to $5,629,800,000
Shigella sonnei (Ref. 21)	Michigan, 1988	Tofu salad	3,175 cases	Not available	$45,200,000 to $79,800,000
Outbreaks Resulting From Deliberate Contamination					
S. Typhimurium (Ref. 22)	Dalles, Oregon, 1984	Salad bars	751 cases, 45 hospitalized	Not available	$10,700,000 to $18,900,000
S. dysentreriae type 2 (Ref. 23)	Texas, 1996	Muffins and doughnuts	12 cases, 4 hospitalized	All cases identified	$83,000
Outbreaks Resulting From Imported Foods					
Cyclospora cayaetanensis (Ref. 24)	United States and Canada, 1996	Raspberries (probably imported from Guatemala)	1,465 cases identified, less than 20 hospitalized	Not available	$3,900,000

BILLING CODE 4160–01–C

a. *Food-contact substances.*

(Comment 187) Some comments stated that there would be no benefits to requiring the registration of articles that contact food and their components. Commenters noted that none of the foodborne outbreaks included in the benefits section resulted from articles that contact food. However, other comments noted the potential for articles that contact food to leach into and contaminate food and concluded that it was necessary to require the registration of articles that contact food.

(Response) FDA has revised the interim final rule to exclude facilities that manufacture/process, pack, or hold food-contact substances, as defined in section 409(h)(6) of the FD&C Act. Accordingly, FDA does not need to address these comments, because these facilities are not subject to the interim final rule.

b. *Food product categories.*

(Comment 188) Many comments claim that, for several reasons, including food product categories would have no benefits: One, facilities would be unable to categorize their products correctly; two, FDA would fail to communicate with facilities that use as ingredients potentially affected foods; and three, the food product categories do not make useful distinctions between categories. Comments claimed that these limitations would make food product code categories useless and even have a negative impact on FDA's ability to communicate with facilities by diverting resources that could be better used elsewhere.

(Response) FDA disagrees with these comments. Consultations with FDA field personnel identify food product categories as an essential part of registration. FDA field personnel state that they would use food product category information to identify facilities potentially affected by a particular emergency, such as a terrorist threat or class 1 recall and for planning inspections. For example, needing to contact only 200 facilities with information about a threat instead of 20,000 will enhance FDA's speed and the reliability of the message. FDA believes that facilities can correctly categorize their products, and FDA will provide interactive help menus as part of the electronic registration system to aid facilities in correctly identifying the appropriate food product categories for their products. Also, FDA will provide a link to the agency's product code builder, which will allow facilities to search for their particular products.

FDA staff have experience using food product categories in their current enforcement activities and have found them to make useful distinctions between foods. FDA is also aware that some products may be ingredients in other food products and will use that information in selecting which facilities

to inform of a threat. While FDA recognizes that in some instances and depending on the nature of the threat, it may not be able to target only certain facilities with which to communicate (*e.g.*, a threat against a food product used as an ingredient in many finished products), this does not mean that having product category information would not help FDA focus its resources in other situations (*e.g.*, a threat specifically against soft drink beverage facilities).

(Comment 189) Some comments stated that including food product categories was necessary for the registration system to have any utility.

(Response) FDA agrees with these comments and has chosen to include product categories as a required element in the registration.

c. *U.S. agent.*

(Comment 190) Many comments state that requiring a U.S. agent would generate no benefits and might even inhibit communications between the facility and FDA. Comments offer alternatives such as not requiring the U.S. agent to reside or maintain a place of business in the United States, exempting facilities that provide an e-mail address from the U.S. agent requirement, and making the U.S. agent optional.

(Response) FDA does not agree that a U.S. agent will inhibit communications with FDA. The facility may opt to register with FDA directly and have FDA communicate directly with the facility in case of an emergency. Therefore, requiring a U.S. agent will not lower the expected benefits, as FDA still would have a contact in the United States for each facility with which the agency can communicate on routine matters (*e.g.* issuance of new regulations or guidance applicable to the facility). For some facilities that lack the ability to communicate easily with the United States, due, for example, to language barriers or lack of telephone or Internet access, the U.S. agent will be an important link for both registering the facility, if the owner, operator, or agent in charge authorizes the U.S. agent (if an individual) to register the facility, and communicating with FDA. For a facility that prefers to register and communicate with FDA itself, the U.S. agent still provides additional benefits, such as of being in the same, or nearby, time zone.

d. *Frequency of updates.*

(Comment 191) Many comments request that FDA require less frequent updates of registration information on the basis of high costs to update registration, without generating offsetting benefits.

(Response) FDA has lengthened the update period to 60 days, but has not extended it to the 6 to 12 months requested in many comments. The usefulness of the registration database depends in large part on its accuracy. Allowing longer times for updates will considerably reduce the accuracy of the database, while, as shown in the analysis of costs, will not significantly lower the costs. For most facilities, there will be little difference in costs for updates for 60 days versus annually. The largest costs will be to large manufacturers/processors, which are estimated to update twice a year, at a cost of approximately 2 hours of labor. However, allowing yearly updates would mean that more than 50 percent of the registrations in the database would contain incorrect information at any given point in time, versus less than 10 percent with 60 day updates. Although, FDA is unable to quantify the benefit of a more accurate database, the functionality of the database will be substantially better with a smaller percentage of registrations containing inaccurate information.

Additionally, when foreign food facilities attempt to import their product into the United States, their prior notice will be checked against the registration database. If there are discrepancies between the registration database and information in the prior notice, the shipment will be flagged for followup by FDA personnel, as deemed appropriate. Discrepancies confirmed by FDA border inspections may cause FDA or CBP to examine the shipment.

Table 16.--Summary of Annualized Costs and Qualitative Benefits

	Discount Rate	Final Rule	Longer Updates	No Product Categories	No U.S. Agent
Domestic costs	3%	$6.3	$5.9	$5.8	$6.3
Foreign costs	3%	$185.5	$185.2	$185.1	$11.5
FDA costs	3%	$6.5	$6.5	$6.5	$6.5
Total costs		$198.3	$197.6	$197.4	$24.3
Domestic costs	7%	$4.8	$4.5	$4.5	$4.8
Foreign costs	7%	$136.5	$136.3	$136.2	$9.3
FDA costs	7%	$4.9	$4.9	$4.9	$4.9
Total costs		$146.2	$145.7	$145.6	$19.0
Benefits			lower	lower	lower

V. Interim Final Regulatory Flexibility Analysis

FDA has examined the economic implications of this interim final rule as required by the Regulatory Flexibility Act (5 U.S.C. 601–612). If a rule has a significant economic impact on a substantial number of small entities, the Regulatory Flexibility Act requires agencies to analyze regulatory options that would lessen the economic effect of the rule on small entities. FDA has concluded that this interim final rule would have a significant economic impact on a substantial number of small entities. The following analysis, together with other relevant sections of this document, serves as the agency's final regulatory flexibility analysis under the Regulatory Flexibility Act.

(Comment 192) Several comments state that FDA underestimated the impact of the registration on small entities. Small domestic facilities may be adversely affected if their foreign trading partners stop exporting to the United States and small entities may incur higher costs than estimated in the

PRIA. Particularly, small facilities that operate in small niche markets may incur large expenses finding new suppliers.

(Response) FDA did not include in the Preliminary Regulatory Flexibility Analysis the cost of small entities losing foreign suppliers. FDA has estimated that 16 percent of foreign facilities may stop exporting to the United States to avoid the registration requirements. FDA estimates that the impact of registration on the number of line entries submitted for import into the United States will be less than 2 percent of all food entries. This may result in a significant impact on a substantial number of small entities. However, FDA is not able to predict how many small entities will be adversely affected or the size of the impact, and none of the comments provided a basis from which to estimate this impact.

Of the 216,271 domestic entities covered under the interim final rule, 99 percent are small according to the Small Business Administration's (SBA's) regulations. The expected burden for small entities is low, between $90 and $147. For some small facilities, however, costs may be much higher than the expected burden. As stated previously, there is a potential for large transaction costs associated with finding new trading partners. Also, some small facilities may experience unusual difficulties in registering, such as difficulty understanding the requirements, difficulty finding the registration form or website, or confusion over whether they are required to register. With such a large number of facilities affected, if a meaningful percentage of small entities experience a much larger burden, a substantial number of small entities will experience a significant economic effect. A discussion of options considered for small entities was included in the proposed rule. Additional options are also considered in the final regulatory impact analysis, which may also be considered an analysis of options for small businesses because the vast majority of affected entities are small.

VI. Unfunded Mandates

Title II of the Unfunded Mandates Reform Act of 1995 (Pub. L. 104–4) requires cost-benefit and other analyses before any rulemaking if the rule would include a ''Federal mandate that may result in the expenditure by State, local, and tribal governments, in the aggregate, or by the private sector, of $100,000,000 or more (adjusted annually for inflation) in any 1 year.'' The current inflation-adjusted statutory threshold is $113 million. FDA has determined that this interim final rule does not constitute a significant rule under the Unfunded Mandates Reform Act.

VII. Small Business Regulatory Enforcement Fairness Act (SBREFA) Major Rule

The Small Business Regulatory Enforcement Fairness Act of 1996 (Pub. L. 104–121) defines a major rule for the purpose of Congressional review as having caused or being likely to cause one or more of the following: An annual effect on the economy of $100 million; a major increase in costs or prices; significant adverse effects on competition, employment, productivity, or innovation; or significant adverse effects on the ability of U.S.-based enterprises to compete with foreign-based enterprises in domestic or export markets. In accordance with the SBREFA, the Office of Management and Budget (OMB) has determined that this interim final rule is a major rule for the purpose of Congressional review.

VIII. Paperwork Reduction Act of 1995

This interim final rule contains information collection requirements that are subject to review by OMB under the Paperwork Reduction Act of 1995 (the PRA) (44 U.S.C. 3501–3520). The title, description, and respondent description of the information collection provisions are shown later with an estimate of the annual reporting and recordkeeping burden. Included in the estimate is the time for reviewing instructions, searching existing data sources, gathering and maintaining the data needed, and completing and reviewing each collection of information.

Title: Registration of Food Facilities.

Description: The Bioterrorism Act contains a provision requiring the Secretary to issue a regulation requiring that domestic and foreign facilities that manufacture/process, pack, or hold food intended for consumption in the United States register with FDA by December 12, 2003. Under the Bioterrorism Act, a foreign facility is one that manufactures/processes, packs, or holds food for consumption in the United States without further processing or packaging outside the United States. Information FDA requires on the registration form includes the name and full address of the facility; emergency contact information; all trade names the facility uses; applicable food product categories identified in § 170.3, unless ''most/all'' human food categories ''or none of the above mandatory categories'' is checked; and a certification statement that includes the name of the individual authorized to submit the registration form. Additionally, under the interim final rule, facilities would be encouraged to submit their preferred mailing address; type of activity conducted at the facility; food categories not included under § 170.3, but which are helpful to FDA for responding to an incident; type of storage, if the facility is primarily a holding facility; and approximate dates of operation if the facility's business is seasonal. Under the interim final rule, facilities would also be required to submit timely updates within 60 days of a change to any required information on their registration form, and are required to cancel their registration when the facility ceases to operate or is sold to new owners or ceases to manufacture/process, pack, or hold food for consumption in the United States.

Description of Respondents: Domestic facilities that manufacture/process, pack, or hold food for consumption in the United States are required to register. Foreign facilities are required to register if they manufacture/process food for consumption in the United States that is not further processed or packaged before being shipped to the United States or if they pack or hold such food. A food is not considered to have been further processed solely because labeling was added or other *de minimis* activity was performed with respect to the food.

TABLE 17.—NO. OF RESPONDENTS

Domestic facilities	216,271
Foreign facilities	205,405
Total	421,676

Burden: In the PRA analysis of the proposed rule, FDA estimated that it would take an administrative worker with Internet access 1 hour to read and understand the registration requirements; this time was doubled to 2 hours of an administrative worker's time for those facilities without Internet access. In response to comments, FDA has revised this estimate to 1 or 2 hours of a manager's time to read and understand the regulations. Foreign facilities' workers would need 1 hour to read and understand the registration requirements, if they have access to the Internet and can read and write in English. An additional 5 hours would be needed if they do not have Internet access, and an additional 5 hours would be needed if they do not read or understand English. In subsequent years, facilities that enter the industry would have to register, facilities that close would have to notify FDA of their closure, and facilities that have changes in their registration information would

have to provide updates to FDA. FDA estimated that annually 10 percent of covered facilities would close, 10 percent would open (SBA Small Businesses by the Numbers), and 20 percent of registered facilities would have changes to their registration information.

Next, FDA estimates that filling out a registration form would take a total of 1 hour: 45 minutes of an administrative worker's time and 15 minutes of an owner, operator, or agent in charge's time to verify that the registration information is correct before submitting the form to FDA. Foreign facilities' workers would need 1 hour to fill out the form, if they have access to the Internet and can read and write in English. An additional 1 hour would be needed if they do not have Internet access and an additional 1 hour would be needed if they do not read or understand English. Table 18 of this document shows the burden by domestic and foreign facilities, availability of the Internet, and fluency in English. FDA has information on the percentages of foreign facilities without Internet access and without employees fluent in English, but no information on the percentages of facilities with a particular combination of these characteristics. To compute the burden hours, for ease of computation and reporting, FDA assigned to zero facilities the condition of Internet access and no employees fluent in English and used the percentages of facilities without Internet access and with no employees fluent in English to report numbers of facilities with Internet and English-speaking employees, without Internet and without English-speaking employees, and without Internet and with English-speaking employees. FDA believes that facilities will only use the CD–ROM option, if it will require the same, or fewer hours, than another option.

In the following years, new facilities will have to register with FDA. These new facilities will bear the same burden to register that facilities incurred in the first year. Based on estimates by SBA that 10 percent of all businesses are new (SBA, Small Business by the Numbers), FDA estimates that the number of new facilities each year will be equal to 10 percent of the total number of facilities. Also, a facility that goes out of business, changes ownership, or stops manufacturing/processing, packing, or holding food for consumption in the United States will have to cancel its registration. FDA estimated that 10 percent of the total number of facilities will have to cancel their registration, also based on SBA statistics. FDA estimated that it would take these facilities approximately 1 hour to locate the correct form, enter their information, and send it to FDA. Finally, facilities for which there is a change of information submitted in their registration will have to update their registration. FDA estimated that each year 20 percent of facilities will have to update the information submitted in their registration. This estimate is revised to 55 percent based on comments. It will take these facilities approximately 1 hour to locate the correct form, enter the updated information, and send it to FDA. Table 19 of this document presents an estimate of the burden hours for new facilities, and updates and cancellations for previously registered facilities in future years.

Additionally, facilities that are not registered and are required by FDA to move their food shipment to secure storage must also notify FDA of the location of the secure storage. This paperwork burden is already estimated in Prior Notice of Imported Food Under the Public Health Security and Bioterrorism Preparedness and Response Act of 2002 (68 FR 5428), which requires imports that fail to give adequate notice, including failure to provide a required registration number, to place their shipment in secure storage.

In response to comments, FDA added the option of submitting registrations by CD–ROM. FDA believes that registrants will only use this option if it will take them as the same as or less time than submitting their registrations by Internet or mail. Therefore, the total number of burden hours will remain the same or be decreased by the availability of the CD–ROM option.

(Comment 193) FDA received numerous comments about the usefulness of the information, number of respondents, and the hourly burden for the respondents.

(Response) FDA has responded to comments relating to the usefulness of the information collection in section IV. A.6 of this document (Benefits). Similarly, the agency has responded to comments relating to the number of respondents in section IV.A.3 of this document (number of facilities affected). Finally, the agency has responded to comments regarding the hourly burden in section IV.A.4.a of this document (time costs).

(Comment 194) FDA received numerous comments that the PRA analysis was incorrect, because it failed to include duplicative registration requirements for many facilities.

(Response) The PRA analysis counts the burden hours resulting from the provisions of the interim final rule. Burden hours for other registration provisions would be counted in the PRA analyses for those rules. Including burden hours for other registration provisions would result in double counting of the burden hours. Therefore, FDA does not agree with this comment.

(Comment 195) FDA received comments that FDA had underestimated the frequency with which facilities would need to update their registrations.

(Response) As noted, the interim final rule changes the requirement for timely update from 30 to 60 days. FDA re-estimated the frequency with which facilities would update their registrations. Instead of 20 percent, 55 percent of facilities will update their registrations each year. A full discussion of how this estimate was reached is included in the response to comment 197 (section IV.A.5.c of this document).

BILLING CODE 4160–01–P

Table 18.--Estimated Annual Reporting Burden--First Year[1]

	FDA Form No.	No. of respondents	Annual Frequency per Respondent	Total Annual Responses	Hours per Response	Total Hours
21 CFR Part 1						
1.231(a), 1.232, 1.233[2]	FDA 3537	152,552	1	152,552	2	305,104
1.231(b), 1.232, 1.233[3]	FDA 3537	61,719	1	61,719	3	185,157
1.231(c), 1.232, 1.233[2]	FDA 3537	1,000	1	1,000	2	2,000
1.231(c), 1.232, 1.233[3]	FDA 3537	1,000	1	1,000	3	3,000
1.231(a), 1232, 1.233[4]	FDA 3537	31,864	1	31,864	2	63,728
1.231(b), 1.232,1.233,[5]	FDA 3537	29,811	1	29,811	7	208,677
1.231(b), 1.232, 1.233,[6]	FDA 3537	141,730	1	141,730	12	1,700,760
1.231(c), 1.232, 1.233[4]	FDA 3537	1,000	1	1,000	2	2,000
1.231(c), 1.232, 1.233[5]	FDA 3537	1,000	1	1,000	7	7,000
Total hours						2,477,426

[1]There are no capital costs or operating and maintenance costs associated with this collection of information.

[2] Domestic facilities with Internet access.

[3] Domestic facilities without Internet access.

[4] Foreign facilities with Internet access and fluent in English.

[5]Foreign facilities without Internet access and fluent in English.

[6]Foreign facilities without Internet access and not fluent in English.

Table 19.--Estimated Annual Reporting Burden--Subsequent Years[1]

21 CFR Part 1	FDA form number	Number of respondents	Annual frequency per respondent	Total annual responses	Hours per response	Total Hours
New Facilities						
1.231(a), 1.232, 1.233[2]	FDA 3537	15,255	1	15,255	2	30,510
1.231(b), 1.232, 1.233[3]	FDA 3537	6,172	1	6,172	3	18,516
1.231(c), 1.232, 1.233[2]	FDA 3537	100	1	100	2	200
1.231(c), 1.232, 1.233[3]	FDA 3537	100	1	100	3	300
1.231(a), 1.232, 1.233[4]	FDA 3537	3,186	1	3,186	2	6,372
1.231(b), 1.232, 1.233[5]	FDA 3537	2,981	1	2,981	7	20,867
1.231(b), 1.232, 1.233[6]	FDA 3537	14,173	1	14,173	12	170,076
1.231(c), 1.232, 1.233[4]	FDA 3537	100	1	100	2	200
1.231(c), 1.232, 1.233[5]	FDA 3537	100	1	100	7	700
Previously registered facilities						
1.234(c),[2] 1.235(c)	FDA 3537/ 3537a	99,159	1	99,159	1	99,159
1.234(d),[3] 1.235(d)	FDA 3537/ 3537a	40,117	1	40,117	1	40,117
1.234(e),[2] 1.235(e)	FDA 3537/ 3537a	650	1	650	1	650
1.234(e),[3] 1.235(e)	FDA 3537/ 3537a	650	1	650	1	650
1.234(c),[4] 1.235(c)	FDA 3537/ 3537a	20,711	1	20,711	1	20,711
1.234(d),[5] 1.235(d)	FDA 3537/ 3537a	19,377	1	19,377	1	19,377
1.234(d),[6] 1.235(d)	FDA 3537/ 3537a	92,125	1	92,125	1	92,125
1.234(e),[4] 1.235 (e)	FDA 3537/ 3537a	650	1	650	1	650
1.234(e),[5] 1.235 (e)	FDA 3537/ 3537a	650	1	650	1	650
Total						521,830

[1]There are no capital costs or operating and maintenance costs associated with this collection of information.
[2]Domestic facilities with Internet access.
[3]Domestic facilities without Internet access.
[4]Foreign facilities with Internet access and fluent in English.
[5]Foreign facilities without Internet access and fluent in English.
[6]Foreign facilities without Internet access and not fluent in English.

BILLING CODE 4160–01–C

The information collection provisions of this interim final rule have been submitted to OMB for review.

Prior to the effective date of this interim final rule, FDA will publish a notice in the **Federal Register** announcing OMB's decision to approve, modify, or disapprove the information collection provisions in this interim final rule. An agency may not conduct or sponsor, and a person is not required to respond to, a collection of information unless it displays a currently valid OMB control number.

IX. Request for Comments

FDA is issuing this rule as an interim final rule, with an opportunity for public comment on specific issues identified below. Although the agency is seeking comment on this interim final rule, it is effective December 12, 2003. This means that the rule's requirements will be in effect and have the force and effect of law from that date until any subsequent modification by the issuance of a final rule. Accordingly, as required by section 305 of the Bioterrorism Act, all covered facilities must be registered with FDA by December 12, 2003.

As noted, elsewhere in this issue of the **Federal Register**, FDA is publishing an interim final rule concerning prior notice of imported food shipments. Given the relatedness of the prior notice and food facilities registration rules, FDA is establishing a comment period for the registration rule that coincides with the comment period on the prior notice interim final rule. Thus, the comment period for the registration interim final rule will open today for a period of 75 days. Moreover, to ensure that those commenting on this interim final rule have had the benefit of FDA's outreach and educational efforts and have had experience with the systems, timeframes, and data elements of this interim final rule, the agency intends to reopen the comment period for an additional 30 days in March 2004.

As noted elsewhere in this issue of the **Federal Register**, FDA's economic analysis is based on a number of assumptions. To improve this analysis, FDA invites public comment on the following issues:

1. The cost to foreign facilities of hiring and retaining a U.S. agent. Specifically, FDA invites comment, and the submission of data or other information, on the following:

a. The costs to a foreign facility of hiring a U.S. agent;

b. The number of foreign facilities that have hired a U.S. agent or negotiated additional duties from someone with whom they have an existing relationship in response to this interim final rule, instead of relying on an existing relationship with a person who qualifies as a U.S. agent;

c. The number of foreign facilities that have ceased exporting to the United States because they have decided not to hire/retain a U.S. agent for registration purposes.

d. The distribution of costs between submitting registrations and other services offered by the U.S. agent;

e. The assumptions underlying FDA's estimates of the costs of hiring and retaining a U.S. agent.

2. The effects on domestic small businesses, if any, if some foreign facilities cease exporting to the United States due to the U.S. agent requirement for registration. Specifically, FDA invites comment, and the submission of data or other information, on the following:

a. The number of domestic small businesses that have been adversely affected by trading partners that have ceased exporting to the United States due to the U.S. agent requirement for foreign facility registration; and

b. The costs incurred by these domestic small businesses due to the loss of these trading partners.

FDA will seriously consider all comments submitted. FDA is dedicated to updating this estimate with the best available information in order to inform decision makers who may be considering regulatory alternatives in developing a final rule.

Interested persons may submit to the Division of Dockets Management (*see* **ADDRESSES**) written or electronic comments regarding this interim final rule by December 24, 2003. Two copies of any comments are to be submitted, except that individuals may submit one copy. Submit one electronic copy. Submit electronic comments to *http://www.fda.gov/dockets/ecomments*. Comments are to be identified with the docket number found in brackets in the heading of this document. Received comments may be seen in the Division of Dockets Management between 9 a.m. and 4 p.m., Monday through Friday.

As noted, this regulation is effective on December 12, 2003. The agency will address comments received and confirm or amend the interim final rule in a final rule. The agency, however, will not consider any comments that have been previously considered during this rulemaking.

X. Analysis of Environmental Impact

The agency has carefully considered the potential environmental effects of this action. FDA has concluded under 21 CFR 25.30(h) that this action is of a type that does not individually or cumulatively have a significant effect on the human environment. Therefore, neither an environmental assessment nor an environmental impact statement is required.

XI. Federalism

FDA has analyzed this interim final rule in accordance with the principles set forth in Executive Order 13132. FDA has determined that the interim final rule does not contain policies that have substantial direct effects on the States, on the relationship between the National Government and the States, or on the distribution of power and responsibilities among the various levels of government. Accordingly, the agency concludes that the interim final rule does not contain policies that have federalism implications as defined in the Executive order and, consequently, a federalism summary impact statement has not been prepared.

XII. References

The following references have been placed on display in the Division of Dockets Management (HFA–305), Food and Drug Administration, 5630 Fishers Lane, rm. 1061, Rockville, MD 20852 and may be seen by interested persons between 9 a.m. and 4 p.m., Monday through Friday. FDA has verified the Web site addresses in this document, but is not responsible for subsequent changes to the Web sites after this document publishes in the **Federal Register**.

1. Brown, Bradley, Memorandum to the file, July 21, 2003.
2. U.S. Census Bureau, 2000 County Business Patterns, available at *http://www.census.gov/epcd/cbp/view/cbpview.html*.
3. U.S. Census Bureau, 1999 Nonemployer Statistics, available at *http://www.census.gov/epcd/nonemployer/index.html*.
4. U.S. Food and Drug Administration, Field Accomplishments and Compliance Tracking System (FACTS), fiscal year 2002.
5. U.S. Department of Agriculture, National Agriculture Statistics Service, 1997 Census of Agriculture-United States Data, available at *http://www.nass.usda.gov/census/*.
6. U.S. Census Bureau, 1997 Economic Census of Transportation and Warehousing, available at *http://www.census.gov/svsd/www/97trans.html*.
7. Direct Selling Association, Direct Selling by the Numbers, accessed at *http://www.dsa.org/research/numbers.htm#DISTTYPE*, 7/10/2003.
8. Direct Sales World, Facts and Figures and Comment of the World of Direct Sales, accessed at *http://www.nmworld.com/pages/Countries/USA/index.html*, 7/10/2003.
9. U.S. Census Bureau, Guam: 1997 Census of the Outlying Areas, available at *http://www.census.gov/prod/ec97/oa97e-6.pdf*.
10. U.S. Census Bureau, Northern Mariana Islands: 1997 Census of the Outlying Areas, available at *http://www.census.gov/prod/ec97/oa97e-7.pdf*.
11. U.S. Census Bureau, Puerto Rico: 1997 Census of the Outlying Areas, available at *http://www.census.gov/prod/ec97/oa97e-4.pdf*.
12. U.S. Census Bureau, Virgin Islands: 1997 Census of the Outlying Areas, available at *http://www.census.gov/prod/ec97/oa97e-5.pdf*.
13. U.S. Food and Drug Administration, Operational and Administrative System for Import Support (OASIS), fiscal year 2002.

14. RTI, Survey of Manufacturing Practices in the Dietary Supplement Industry, Prepared for FDA, May 17, 2003.
15. Brown, Bradley, Memorandum to file, November 22, 2002.
16. U.S. Department of Labor, Bureau of Labor Statistics, National Compensation Survey: Occupation Wages in the United States, 2000, Summary 01–04, available at *http://www.bls.gov/ncs/ocs/sp/ncbl0354.pdf*.
17. U.S. Small Business Administration, Office of Advocacy, Small Business by the Numbers May 2002, available at *http://www.sba.gov/advo/stats/sbfaq.html*.
18. Cato, Todd, Memo to the record, May 23, 2003.
19. Gripp, Russell, Memo to the record, May 14, 2003.
20. Hennessy T. W., Hedberg C. W., Slutsker L, *et al.*, and the Investigation Team, ''A National Outbreak of *Salmonella enteritidis* Infections From Ice Cream,'' *The New England Journal of Medicine*, May 16, 1996, pp. 1281–1286.
21. Kolavic S. A., Kimura A, Simons S. L., *et al.*, ''An Outbreak of Shigella Dysenteriae Type 2 Among Laboratory Workers Due to Intentional Food Contamination,'' *The Journal of the American Medical Association*, 278:5:396–403.
22. Trook T. J., Tauxe R. V., Wise R.P., *et al.* ''A Large Community Outbreak of Salmonellosis Caused by Intentional Contamination of Restaurant Salad Bars,'' *The Journal of the American Medical Association*, 278:5:389–397.
23. Lee L. A., Ostroff S. M., McGee H. B., *et al.* ''An Outbreak of Shigellosis at an Outdoor Music Festival,'' *American Journal of Epidemiology*, 133:6:608–615.
24. Herwaldt B. L., Ackers M. L., and Cyclospora Working Group, ''An Outbreak in 1996 of Cyclosporiasis Associated With Imported Raspberries,'' *New England Journal of Medicine*, May 29, 1997, pp. 1548–1556.

List of Subjects

21 CFR Part 1

Cosmetics, Drugs, Exports, Food labeling, Imports, Labeling, Reporting and recordkeeping requirements.

21 CFR Part 20

Confidential business information, Courts, Freedom of information, Government employees.

■ Therefore, under the Federal Food, Drug, and Cosmetic Act and under authority delegated to the Commissioner of Food and Drugs, 21 CFR parts 1 and 20 are amended as follows:

PART 1—GENERAL ENFORCEMENT REGULATIONS

■ 1. The authority citation for part 1 is revised to read as follows:

Authority: 15 U.S.C. 1453, 1454, 1455; 19 U.S.C. 1490, 1491; 21 U.S.C. 321, 331, 332, 333, 334, 335a, 343, 350c, 350d, 352, 355, 360b, 362, 371, 374, 381, 382, 393; 42 U.S.C. 216, 241, 243, 262, 264.

■ 2. Subpart H (§§ 1.225 through 1.243) is added to part 1 to read as follows (subparts F and G are reserved):

Subparts F–G [Reserved]

Subpart H—Registration of Food Facilities

General Provisions

Sec.
1.225 Who must register under this subpart?
1.226 Who does not have to register under this subpart?
1.227 What definitions apply to this subpart?

Procedures for Registration of Food Facilities

1.230 When must you register?
1.231 How and where do you register?
1.232 What information is required in the registration?
1.233 What optional items are included in the registration form?
1.234 How and when do you update your facility's registration information?
1.235 How and when do you cancel your facility's registration information?

Additional Provisions

1.240 What other registration requirements apply?
1.241 What are the consequences of failing to register, update, or cancel your registration?
1.242 What does assignment of a registration number mean?
1.243 Is food registration information available to the public?

General Provisions

§ 1.225 Who must register under this subpart?

(a) You must register your facility under this subpart if you are the owner, operator, or agent in charge of either a domestic or foreign facility, as defined in this subpart, and your facility is engaged in the manufacturing/processing, packing, or holding of food for consumption in the United States, unless your facility qualifies for one of the exemptions in § 1.226.

(b) If you are an owner, operator, or agent in charge of a domestic facility, you must register your facility whether or not the food from the facility enters interstate commerce.

(c) If you are the owner, operator, or agent in charge of a facility, you may authorize an individual to register your facility on your behalf.

§ 1.226 Who does not have to register under this subpart?

This subpart does not apply to the following facilities:

(a) A foreign facility, if food from such facility undergoes further manufacturing/processing (including packaging) by another facility outside the United States. A facility is not exempt under this provision if the further manufacturing/processing (including packaging) conducted by the subsequent facility consists of adding labeling or any similar activity of a *de minimis* nature;

(b) Farms;

(c) Retail food establishments;

(d) Restaurants;

(e) Nonprofit food establishments in which food is prepared for, or served directly to, the consumer;

(f) Fishing vessels, including those that not only harvest and transport fish but also engage in practices such as heading, eviscerating, or freezing intended solely to prepare fish for holding on board a harvest vessel. However, those fishing vessels otherwise engaged in processing fish are subject to this subpart. For the purposes of this section, ''processing'' means handling, storing, preparing, shucking, changing into different market forms, manufacturing, preserving, packing, labeling, dockside unloading, holding, or heading, eviscerating, or freezing other than solely to prepare fish for holding on board a harvest vessel;

(g) Facilities that are regulated exclusively, throughout the entire facility, by the U.S. Department of Agriculture under the Federal Meat Inspection Act (21 U.S.C. 601 *et seq.*), the Poultry Products Inspection Act (21 U.S.C. 451 *et seq.*), or the Egg Products Inspection Act (21 U.S.C. 1031 *et seq.*);

§ 1.227 What definitions apply to this subpart?

(a) *The act* means the Federal Food, Drug, and Cosmetic Act.

(b) In addition, for the purposes of this subpart:

(1) *Calendar day* means every day shown on the calendar.

(2) *Facility* means any establishment, structure, or structures under one ownership at one general physical location, or, in the case of a mobile facility, traveling to multiple locations, that manufactures/processes, packs, or holds food for consumption in the United States. Transport vehicles are not facilities if they hold food only in the usual course of business as carriers. A facility may consist of one or more contiguous structures, and a single building may house more than one distinct facility if the facilities are under separate ownership. The private residence of an individual is not a facility. Nonbottled water drinking water collection and distribution establishments and their structures are not facilities.

(i) *Domestic facility* means any facility located in any State or Territory of the United States, the District of Columbia, or the Commonwealth of Puerto Rico that manufactures/processes, packs, or holds food for consumption in the United States.

(ii) *Foreign facility* means a facility other than a domestic facility that manufactures/processes, packs, or holds food for consumption in the United States.

(3) *Farm* means a facility in one general physical location devoted to the growing and harvesting of crops, the raising of animals (including seafood), or both. Washing, trimming of outer leaves of, and cooling produce are considered part of harvesting. The term ''farm'' includes:

(i) Facilities that pack or hold food, provided that all food used in such activities is grown, raised, or consumed on that farm or another farm under the same ownership; and

(ii) Facilities that manufacture/process food, provided that all food used in such activities is consumed on that farm or another farm under the same ownership.

(4) *Food* has the meaning given in section 201(f) of the act (21 U.S.C. 321(f)),

(i) Except for purposes of this subpart, it does not include:

(A) *Food* contact substances as defined in section 409(h)(6) of the act (21 U.S.C. 348(h)(6)), or

(B) Pesticides as defined in 7 U.S.C. 136(u).

(ii) Examples of food include fruits, vegetables, fish, dairy products, eggs, raw agricultural commodities for use as food or as components of food, animal feed (including pet food), food and feed ingredients, food and feed additives, dietary supplements and dietary ingredients, infant formula, beverages (including alcoholic beverages and bottled water), live food animals, bakery goods, snack foods, candy, and canned foods.

(5) *Holding* means storage of food. Holding facilities include warehouses, cold storage facilities, storage silos, grain elevators, and liquid storage tanks.

(6) *Manufacturing/processing* means making food from one or more ingredients, or synthesizing, preparing, treating, modifying or manipulating food, including food crops or ingredients. Examples of manufacturing/processing activities are cutting, peeling, trimming, washing, waxing, eviscerating, rendering, cooking, baking, freezing, cooling, pasteurizing, homogenizing, mixing, formulating, bottling, milling, grinding, extracting juice, distilling, labeling, or packaging.

(7) *Nonprofit food establishment* means a charitable entity that prepares or serves food directly to the consumer or otherwise provides food or meals for consumption by humans or animals in the United States. The term includes central food banks, soup kitchens, and nonprofit food delivery services. To be considered a nonprofit food establishment, the establishment must meet the terms of section 501(c)(3) of the U.S. Internal Revenue Code (26 U.S.C. 501(c)(3)).

(8) *Packaging* (when used as a verb) means placing food into a container that directly contacts the food and that the consumer receives.

(9) *Packing* means placing food into a container other than packaging the food.

(10) *Restaurant* means a facility that prepares and sells food directly to consumers for immediate consumption. ''Restaurant'' does not include facilities that provide food to interstate conveyances, central kitchens, and other similar facilities that do not prepare and serve food directly to consumers.

(i) Entities in which food is provided to humans, such as cafeterias, lunchrooms, cafes, bistros, fast food establishments, food stands, saloons, taverns, bars, lounges, catering facilities, hospital kitchens, day care kitchens, and nursing home kitchens are restaurants; and

(ii) Pet shelters, kennels, and veterinary facilities in which food is provided to animals are restaurants.

(11) *Retail food establishment* means an establishment that sells food products directly to consumers as its primary function. A retail food establishment may manufacture/process, pack, or hold food if the establishment's primary function is to sell from that establishment food, including food that it manufactures/processes, packs, or holds, directly to consumers. A retail food establishment's primary function is to sell food directly to consumers if the annual monetary value of sales of food products directly to consumers exceeds the annual monetary value of sales of food products to all other buyers. The term ''consumers'' does not include businesses. A ''retail food establishment'' includes grocery stores, convenience stores, and vending machine locations.

(12) *Trade name* means the name or names under which the facility conducts business, or additional names by which the facility is known. A trade name is associated with a facility, and a brand name is associated with a product.

(13) *U.S. agent* means a person (as defined in section 201(e) of the act (21 U.S.C. 321(e))) residing or maintaining a place of business in the United States whom a foreign facility designates as its agent for purposes of this subpart. A U.S. agent cannot be in the form of a mailbox, answering machine or service, or other place where an individual acting as the foreign facility's agent is not physically present.

(i) The U.S. agent acts as a communications link between FDA and the foreign facility for both emergency and routine communications. The U.S. agent will be the person FDA contacts when an emergency occurs, unless the registration specifies under § 1.233(e) another emergency contact.

(ii) FDA will treat representations by the U.S. agent as those of the foreign facility, and will consider information or documents provided to the U.S. agent the equivalent of providing the information or documents to the foreign facility.

(iii) Having a single U.S. agent for the purposes of this subpart does not preclude facilities from having multiple agents (such as foreign suppliers) for other business purposes. A firm's commercial business in the United States need not be conducted through the U.S. agent designated for purposes of this subpart.

(14) *You* or *registrant* means the owner, operator, or agent in charge of a facility that manufactures/processes, packs, or holds food for consumption in the United States.

Procedures for Registration of Food Facilities

§ 1.230 When must you register?

The owner, operator, or agent in charge of a facility that manufactures/processes, packs or holds food for consumption in the United States must register the facility no later than December 12, 2003. The owner, operator, or agent in charge of a facility that begins to manufacture/process, pack, or hold food for consumption in the United States on or after December 12, 2003, must register before the facility begins such activities. An owner, operator, or agent in charge of a facility may authorize an individual to register the facility on its behalf.

§ 1.231 How and where do you register?

(a) *Electronic registration.* (1) To register electronically, you must register at *http://www.fda.gov/furls*, which is available for registration 24 hours a day, 7 days a week. This website is available from wherever the Internet is accessible, including libraries, copy centers, schools, and Internet cafes. An

individual authorized by the owner, operator, or agent in charge of a facility may also register a facility electronically.

(2) FDA strongly encourages electronic registration for the benefit of both FDA and the registrant.

(3) Once you complete your electronic registration, FDA will automatically provide you with an electronic confirmation of registration and a permanent registration number.

(4) You will be considered registered once FDA electronically transmits your confirmation and registration number.

(b) *Registration by mail or fax.* If, for example, you do not have reasonable access to the Internet through any of the methods described in paragraph (a) of this section, you may register by mail or fax.

(1) You must register using Form 3537. You may obtain a copy of this form by writing to the U.S. Food and Drug Administration (HFS–681), 5600 Fishers Lane, Rockville, MD 20857 or by requesting the form by phone at 1–877–FDA–3882 (1–877–332–3882).

(2) When you receive the form, you must fill it out completely and legibly and either mail it to the address in paragraph (b)(1) of this section or fax it to 301–210–0247.

(3) If any required information on the form is incomplete or illegible when FDA receives it, FDA will return the form to you for revision, provided that your mailing address or fax number is legible and valid. When returning a registration form for revision, FDA will use the means by which the form was received by the agency (*i.e.*, by mail or fax).

(4) FDA will enter complete and legible mailed and faxed registration submissions into its registration system, along with CD–ROM submissions, as soon as practicable, in the order FDA receives them.

(5) FDA will then mail to the address or fax to the fax number on the registration form a copy of the registration as entered, confirmation of registration, and your registration number. When responding to a registration submission, FDA will use the means by which the registration was received by the agency (*i.e.*, by mail or fax).

(6) If any information you previously submitted was incorrect at the time of submission, you must immediately update your facility's registration as specified in § 1.234.

(7) Your facility is considered registered once FDA enters your facility's registration data into the registration system and the system generates a registration number.

(c) *Registration by CD–ROM for multiple submissions.* If, for example, you do not have reasonable access to the Internet through any of the methods provided under paragraph (a) of this section, you may register by CD–ROM.

(1) Registrants submitting their registrations in CD–ROM format must use ISO 9660 (CD–R or CD–RW) data format.

(2) These files must be submitted on a portable document format (PDF) rendition of the registration form (Form 3537) and be accompanied by one signed copy of the certification statement that appears on the registration form (Form 3537).

(3) Each submission on the CD–ROM must contain the same preferred mailing address in the appropriate block on Form 3537.

(4) A CD–ROM may contain registrations for as many facilities as needed up to the CD–ROM's capacity.

(5) The registration on the CD–ROM for each separate facility must have a unique file name up to 32 characters long, the first part of which may be used to identify the parent company.

(6) You must mail the CD–ROM to the U.S. Food and Drug Administration (HFS–681), 5600 Fishers Lane, Rockville, MD 20857.

(7) If FDA receives a CD–ROM that does not comply with these specifications, it will return the CD–ROM to the submitter unprocessed.

(8) FDA will enter CD–ROM submissions that comply with these specifications into its registration system, along with the complete and legible mailed and faxed submissions, as soon as practicable, in the order FDA receives them.

(9) For each facility on the CD–ROM, FDA will mail to the preferred mailing address a copy of the registration(s) as entered, confirmation of registration, and each facility's assigned registration number.

(10) If any information you previously submitted was incorrect at the time of submission, you must immediately update your facility's registration as specified in § 1.234.

(11) Your facility is considered registered once FDA enters your facility's registration data into the registration system and the system generates a registration number.

(d) *Fees.* No registration fee is required.

(e) *Language.* You must submit all registration information in the English language except an individual's name, the name of a company, the name of a street, and a trade name may be submitted in a foreign language. All information, including these items, must be submitted using the Latin (Roman) alphabet.

§ 1.232 What information is required in the registration?

Each registrant must submit the following information through one of the methods described in § 1.231:

(a) The name, full address, and phone number of the facility;

(b) The name, address, and phone number of the parent company, if the facility is a subsidiary of the parent company;

(c) For domestic and foreign facilities, the names, addresses, and phone numbers of the owner, operator, and agent in charge.

(d) For a foreign facility, the name, address, phone number, and emergency contact phone number of its U.S. agent (if there is no other emergency contact designated under § 1.233(c));

(e) For a domestic facility, an emergency contact phone number;

(f) All trade names the facility uses;

(g) Applicable food product categories as identified in § 170.3 of this chapter, unless you check either ''most/all human food product categories,'' according to § 1.233(e), or ''none of the above mandatory categories'' because your facility manufactures/processes, packs, or holds a food that is not identified in § 170.3 of this chapter;

(h) The name, address, and phone number for the owner, operator, or agent in charge;

(i) A statement in which the owner, operator, or agent in charge certifies that the information submitted is true and accurate. If the individual submitting the form is not the owner, operator, or agent in charge of the facility, the registration must also include a statement in which the individual certifies that the information submitted is true and accurate, certifies that he/she is authorized to submit the registration, and identifies by name, address, and telephone number, the individual who authorized submission of the registration. Each registration must include the name of the individual registering the facility submitting the registration, and the individual's signature (for the paper and CD–ROM options).

§ 1.233 What optional items are included in the registration form?

FDA encourages, but does not require, you to submit the following items in your facility's registration. These data will enable FDA to communicate more quickly with facilities that may be the target of a terrorist threat or attack, or otherwise affected by an outbreak of foodborne illness. This information includes:

(a) Fax number and e-mail address of the facility;

(b) Preferred mailing address, if different from that of the facility;

(c) Fax number and e-mail address of the parent company, if the facility is a subsidiary of the parent company;

(d) For a domestic facility, emergency contact name, title, and e-mail address;

(e) For a foreign facility, an emergency contact name, title, phone number and e-mail address. FDA will consider the facility's U.S. agent the facility's emergency contact unless the facility chooses to designate another person to serve as an emergency contact under this section;

(f) For a foreign facility, title, fax number, and e-mail address of the U.S. agent;

(g) Type of activity conducted at the facility (e.g., manufacturing/processing or holding);

(h) Food categories not identified in § 170.3 of this chapter, which are provided in Form 3537 sections 11a (e.g., infant formula, animal byproducts and extracts) and 11b (e.g., grain products, amino acids);

(i) Type of storage, if the facility is primarily a holding facility;

(j) A food product category of ''most/all human food product categories,'' if the facility manufactures/processes, packs, or holds foods in most or all of the categories identified in § 170.3 of this chapter;

(k) Approximate dates of operation, if the facility's business is seasonal;

(l) The fax number and e-mail address of the owner, operator, or agent in charge; and

(m) The fax number and e-mail address of the individual who authorized submission of the registration.

§ 1.234 How and when do you update your facility's registration information?

(a) *Update requirements.* The owner, operator, or agent in charge must submit an update to a facility's registration within 60 calendar days of any change to any of the information previously submitted under § 1.232 (*e.g.,* change of operator, agent in charge, or U.S. agent), except a change of the owner. The owner, operator, or agent in charge may authorize an individual to update a facility's registration.

(b) *Cancellation due to ownership changes.* If the reason for the update is that the facility has a new owner, the former owner must cancel the facility's registration as specified in § 1.235 within 60 calendar days of the change and the new owner must re-register the facility as specified in § 1.231. The former owner may authorize an individual to cancel a facility's registration.

(c) *Electronic update.* (1) To update your registration electronically, you must update at *http://www.fda.gov/furls*.

(2) Once you complete your electronic update, FDA will automatically provide you with an electronic confirmation of your update.

(3) Your registration will be considered updated once FDA transmits your update confirmation, unless notified otherwise.

(d) *Update by mail or fax.* If, for example, you do not have reasonable access to the Internet through any of the methods described in § 1.231(a)), you may update your facility's registration by mail or by fax:

(1) You must update your registration using Form 3537. You may obtain a copy of this form by writing to the U.S. Food and Drug Administration (HFS–681), 5600 Fishers Lane, Rockville, MD 20857 or by requesting the form by phone at 1–877–FDA–3882 (1–877–332–3882).

(2) When you receive the form, you must legibly fill out the sections of the form reflecting your updated information and either mail it to the address in paragraph (d)(1) of this section or fax it to 301–210–0247.

(3) If the information on the form is incomplete or illegible when FDA receives it, FDA will return the form to you for revision, provided that your mailing address or fax number is legible and valid. When returning a registration form for revision, FDA will use the means by which the registration was received by the agency (*i.e.*, by mail or fax).

(4) FDA will enter complete and legible updates into its registration system, along with CD–ROM submissions, as soon as practicable, in the order FDA receives them.

(5) FDA will then mail to the address or fax to the fax number on the registration form a copy of the update as entered and confirmation of the update. When responding to an update submission, FDA will use the means by which the form was received by the agency (*i.e.*, by mail or fax).

(6) If any update information you previously submitted was incorrect at the time of submission, you must immediately resubmit your update.

(7) Your registration will be considered updated once FDA enters your facility's update data into the registration system and the system generates an update confirmation.

(e) *Update by CD–ROM for multiple submissions.* If, for example, you do not have reasonable access to the Internet through any of the methods provided under § 1.231(a), you may update your facilities' registrations by CD–ROM.

(1) Registrants submitting their updates in CD–ROM format must use ISO 9660 (CD–R or CD–RW) data format.

(2) Update files must be submitted on a PDF rendition of FDA's registration form (Form 3537) and be accompanied by one signed copy of the certification statement on the registration form (Form 3537).

(3) Each submission on the CD–ROM must contain the same preferred mailing address in the appropriate block on Form 3537.

(4) The CD–ROM may contain updates for as many facilities as needed up to the CD–ROM's capacity.

(5) The update for each facility on the CD–ROM must have a unique file name up to 32 characters long, the first part of which may be used to identify the parent company.

(6) You must mail the CD–ROM to U.S. Food and Drug Administration (HFS–681), 5600 Fishers Lane, Rockville, MD 20857.

(7) If FDA receives an update CD–ROM that does not comply with these specifications, it will return the CD–ROM to the registrant unprocessed.

(8) FDA will enter CD–ROM update submissions into its registration system, along with the complete and legible mailed and faxed update submissions, as soon as practicable, in the order FDA receives them.

(9) For each facility on the CD–ROM, FDA will mail to the preferred mailing address a copy of the update(s) as entered and confirmation of the update.

(10) If any update information you previously submitted was incorrect at the time of submission, you must immediately resubmit your update.

(11) Your registration will be considered updated once FDA enters your facility's update data into the registration system and the system generates an update confirmation.

§ 1.235 How and when do you cancel your facility's registration information?

(a) *Notification of registration cancellation.* A facility canceling its registration must do so within 60 calendar days of the reason for cancellation (*e.g.*, facility ceases operations, ceases providing food for consumption in the United States, or the facility is sold to a new owner).

(b) *Cancellation requirements.* The cancellation of a facility's registration must include the following information:

(1) The facility's registration number;

(2) Whether the facility is domestic or foreign;

(3) The facility name and address;

(4) The name, address, and e-mail address (if available) of the individual submitting the cancellation; and

(5) A statement certifying that the information submitted is true and accurate, and that the person submitting the cancellation is authorized by the facility to cancel its registration.

(c) *Electronic cancellation.* (1) To cancel your registration electronically, you must cancel at *http://www.fda.gov/furls.*

(2) Once you complete your electronic cancellation, FDA will automatically provide you with an electronic confirmation of your cancellation.

(3) Your registration will be considered cancelled once FDA transmits your cancellation confirmation.

(d) *Cancellation by mail or fax.* If, for example, you do not have reasonable access to the Internet through any of the methods described in § 1.231(a), you may cancel your facility's registration by mail or fax.

(1) You must cancel your registration using Form 3537a. You may obtain a copy of this form by writing to the U.S. Food and Drug Administration (HFS–681), 5600 Fishers Lane, Rockville, MD 20857, or by requesting the form by phone at 1–877–FDA–3882 (1–877–332–3882).

(2) When you receive the form, you must completely and legibly fill out the form and either mail it to the address in paragraph (d)(1) of this section or fax it to 301–210–0247.

(3) If the information on the form is incomplete or illegible when FDA receives it, FDA will return the form to you for revision, provided that your mailing address or fax number is legible and valid. When returning a cancellation form for revision, FDA will use the means by which the cancellation was received by the agency (*i.e.*, by mail or fax).

(4) FDA will enter complete and legible mailed and faxed cancellations into its registration system, along with CD–ROM cancellations, as soon as practicable, in the order FDA receives them.

(5) FDA will then mail to the address or fax to the fax number on the cancellation form a copy of the cancellation as entered and confirmation of the cancellation. When responding to a cancellation, FDA will use the means by which the form was received by the agency (*i.e.*, by mail or fax).

(6) If any information you previously submitted was incorrect at the time of submission, you must immediately resubmit your cancellation.

(7) Your registration will be considered cancelled once FDA enters your facility's cancellation data into the registration system and the system generates a confirmation.

(e) *Cancellation by CD–ROM for multiple submissions.* If, for example, you do not have reasonable access to the Internet through any of the methods described in § 1.231(a), you may cancel your facilities' registrations using a CD–ROM.

(1) Registrants submitting their cancellations in CD–ROM format must use ISO 9660 (CD–R or CD–RW) data format.

(2) Cancellation files must be submitted on a PDF rendition of the cancellation form (Form 3537a) and be accompanied by one signed copy of the certification statement on the cancellation form.

(3) Each submission on the CD–ROM must contain the same preferred mailing address in the appropriate block on Form 3537.

(4) The CD–ROM may contain cancellations for as many facilities as needed up to the CD–ROM's capacity.

(5) The cancellation for each facility on the CD–ROM must have a unique file name up to 32 characters long, the first part of which may be used to identify the parent company.

(6) You must mail the CD–ROM to U.S. Food and Drug Administration (HFS–681), 5600 Fishers Lane, Rockville, MD 20857.

(7) If FDA receives a CD–ROM that does not comply with these specifications, it will return the CD–ROM to the registrant unprocessed.

(8) FDA will enter CD–ROM submissions that meet the specifications into its registration system, along with complete and legible mailed and faxed submissions, as soon as practicable, in the order FDA receives them.

(9) For each facility on the CD–ROM, FDA will mail to the preferred mailing address a copy of the cancellation(s) as entered and confirmation of the cancellation.

(10) If any information you previously submitted was incorrect at the time of submission, you must immediately resubmit your cancellation.

(11) Your registration will be considered cancelled once FDA enters your facility's cancellation data into the registration system and the system generates a confirmation.

Additional Provisions

§ 1.240 What other registration requirements apply?

In addition to the requirements of this subpart, you must comply with the registration regulations found in part 108 of this chapter, related to emergency permit control, and any other Federal, State, or local registration requirements that apply to your facility.

§ 1.241 What are the consequences of failing to register, update, or cancel your registration?

(a) Section 301 of the act (21 U.S.C. 331) prohibits the doing of certain acts or causing such acts to be done. Under section 302 of the act (21 U.S.C. 332), the United States can bring a civil action in Federal court to enjoin a person who commits a prohibited act. Under section 303 of the act (21 U.S.C. 333), the United States can bring a criminal action in Federal court to prosecute a person who is responsible for the commission of a prohibited act. Under section 306 of the act (21 U.S.C. 335a), FDA can seek debarment of any person who has been convicted of a felony relating to importation of food into the United States. Failure of an owner, operator, or agent in charge of a domestic or foreign facility to register its facility, to update required elements of it's facility's registration, or to cancel its registration in accordance with the requirements of this subpart is a prohibited act under section 301(dd) of the act.

(b) FDA will cancel a registration if the agency independently verifies that the facility is no longer in business or has changed owners, and the owner, operator, or agent in charge of the facility fails to cancel the registration, or if FDA determines that the registration is for a facility that does not exist. If FDA cancels a facility's registration, FDA will mail a confirmation of the cancellation to the facility at the address provided in the facility's registration.

(c) If an article of food is imported or offered for import into the United States and a foreign facility that manufactured/processed, packed, or held that article of food has not registered in accordance with this subpart, the disposition of the article of food shall be governed by the procedures set out in subpart I of this part.

§ 1.242 What does assignment of a registration number mean?

Assignment of a registration number to a facility means that the facility is registered with FDA. Assignment of a registration number does not in any way convey FDA's approval or endorsement of a facility or its products.

§ 1.243 Is food registration information available to the public?

(a) The list of registered facilities and registration documents submitted under this subpart are not subject to disclosure

under 5 U.S.C. 552 (the Freedom of Information Act). In addition, any information derived from such list or registration documents that would disclose the identity or location of a specific registered person, is not subject to disclosure under 5 U.S.C. 552 (the Freedom of Information Act).

(b) Paragraph (a) of this section does not apply to any information obtained by other means or that has previously been disclosed to the public as defined in § 20.81 of this chapter.

PART 20—PUBLIC INFORMATION

Subpart F—Availability of Specific Categories of Records

■ 3. The authority citation for part 20 continues to read as follows:

Authority: 5 U.S.C 552; 18 U.S.C. 1905; 19 U.S.C. 2531–2582; 21 U.S.C. 321–393, 1401–1403; 42 U.S.C. 241, 242, 242a, 242l, 242n, 243, 262, 263, 263b–263n, 264, 265, 300u–300u–5, 300aa–1.

■ 4. Section 20.100 is amended by adding paragraph (c)(42) to read as follows:

§ 20.100 Applicability; cross-reference to other regulations.

* * * * *

(c) * * *

(42) Registration of food facilities, in § 1.243 of this chapter.

Dated: October 2, 2003.

Tommy G. Thompson,

Secretary of Health and Human Services.

Dated: October 8, 2003.

Tom Ridge,

Secretary of Homeland Security.

BILLING CODE 4160–01–P

Note: The following appendix will not appear in the Code of Federal Regulations.

Form Approval: OMB No. 0910-xxxx
Expiration Date:
See OMB Statement at end of form

FDA USE ONLY

DHHS/FDA - FOOD FACILITY REGISTRATION FORM

USE BLUE OR BLACK INK ONLY

Date: _____ **(MM/DD/YYYY)**

Section 1 - TYPE OF REGISTRATION	
1a. ○ **DOMESTIC REGISTRATION**	○ **FOREIGN REGISTRATION**
1b. ○ **INITIAL REGISTRATION**	○ **UPDATE OF REGISTRATION INFORMATION**
If update, provide the following: Facility Registration Number: _____ **PIN**_____	
Check all that apply and further identify changes in the applicable sections.	○ United States Agent Change – Foreign facilities only
○ Facility Name Change	○ Seasonal Facility Dates of Operation Change
○ Facility Address Change (see instructions)	○ Type of Activity Change
○ Preferred Mailing Address Change	○ Type of Storage Change
○ Parent Company Change	○ Human Food Product Category Change
○ Emergency Contact Change	○ Animal Food Product Category Change
○ Trade Name Change	○ Operator or Agent in Charge Change
1c. ARE YOU THE NEW OWNER OF A PREVIOUSLY REGISTERED FACILITY? Yes ○ No ○ If "yes", provide the following information, if known.	
Previous owner's name:	Previous owner's registration number:

Section 2 - FACILITY NAME / ADDRESS INFORMATION	
FACILITY NAME:	
FACILITY STREET ADDRESS, Line 1:	
FACILITY STREET ADDRESS, Line 2:	
CITY:	STATE:
ZIP CODE (POSTAL CODE):	PROVINCE/TERRITORY:
COUNTRY:	PHONE NUMBER (Include Area/Country Code):
FAX NUMBER (OPTIONAL; Include Area/ Country Code):	E-MAIL ADDRESS (OPTIONAL):

Form 3537 (1/03)

Form Approval: OMB No. 0910-xxxx
Expiration Date:
See OMB Statement at end of form

DHHS/FDA - FOOD FACILITY REGISTRATION FORM

Section 3 - PREFERRED MAILING ADDRESS INFORMATION complete this section only if different from Section 2, Facility Name/Address Information (OPTIONAL)	
NAME:	
ADDRESS, Line 1:	
ADDRESS, Line 2:	
CITY:	STATE:
ZIP CODE (POSTAL CODE):	PROVINCE/TERRITORY:
COUNTRY:	PHONE NUMBER (Include Area/ Country Code):
FAX NUMBER (Include Area/ Country Code):	E-MAIL ADDRESS:

Section 4 - PARENT COMPANY NAME / ADDRESS INFORMATION (IF APPLICABLE AND IF DIFFERENT FROM SECTIONS 2 AND 3). IF INFORMATION IS THE SAME AS ANOTHER SECTION, CHECK WHICH SECTION: SECTION 2 ○ or SECTION 3 ○	
NAME OF PARENT COMPANY:	
STREET ADDRESS OF PARENT COMPANY, Line 1:	
STREET ADDRESS OF PARENT COMPANY, Line 2:	
CITY:	STATE:
ZIP CODE (POSTAL CODE):	PROVINCE/TERRITORY:
COUNTRY:	PHONE NUMBER (Include Area/ Country Code):
FAX NUMBER (OPTIONAL; Include Area/Country Code):	E-MAIL ADDRESS (OPTIONAL):

Section 5 - FACILITY EMERGENCY CONTACT INFORMATION (**OPTIONAL** FOR FOREIGN FACILITIES; FDA WILL USE YOUR U.S. AGENT AS YOUR EMERGENCY CONTACT UNLESS YOU CHOOSE TO DESIGNATE A DIFFERENT CONTACT HERE.)	
INDIVIDUAL'S NAME (OPTIONAL):	
TITLE (OPTIONAL):	EMERGENCY CONTACT PHONE (Include area/ country code):
E-MAIL ADDRESS (OPTIONAL):	

Form 3537 (1/03)

Form Approval: OMB No. 0910-xxxx
Expiration Date:
See OMB Statement at end of form

DHHS/FDA - FOOD FACILITY REGISTRATION FORM

Section 6 – TRADE NAMES (IF THIS FACILITY USES TRADE NAMES OTHER THAN THAT LISTED IN SECTION 2 ABOVE, LIST THEM BELOW (E.G., "ALSO DOING BUSINESS AS," "FACILITY ALSO KNOWN AS"):
ALTERNATE TRADE NAME #1:
ALTERNATE TRADE NAME #2:
ALTERNATE TRADE NAME #3:
ALTERNATE TRADE NAME #4:

Section 7 - UNITED STATES AGENT (TO BE COMPLETED BY FACILITIES LOCATED OUTSIDE ANY STATE OR TERRITORY OF THE UNITED STATES, THE DISTRICT OF COLUMBIA, OR THE COMMONWEALTH OF PUERTO RICO.)		
NAME OF U.S. AGENT:		
TITLE (OPTIONAL):		
ADDRESS, Line 1:		
ADDRESS, Line 2:		
CITY:	STATE:	ZIP CODE:
U.S. AGENT PHONE NUMBER (Include Area Code):	EMERGENCY CONTACT PHONE NUMBER (Include Area Code):	
FAX NUMBER (OPTIONAL; Include Area Code):	E-MAIL ADDRESS (OPTIONAL):	

Section 8 - SEASONAL FACILITY DATES OF OPERATION (GIVE THE APPROXIMATE DATES THAT YOUR FACILITY IS OPEN FOR BUSINESS, IF ITS OPERATIONS ARE ON A SEASONAL BASIS) **(OPTIONAL)**
DATES OF OPERATION:

Form 3537 (1/03)

Form Approval: OMB No. 0910-xxxx
Expiration Date:
See OMB Statement at end of form

DHHS/FDA - FOOD FACILITY REGISTRATION FORM

Section 9 - TYPE OF ACTIVITY CONDUCTED AT THE FACILITY
(CHECK **ALL** TYPES OF OPERATIONS THAT ARE PERFORMED AT THIS FACILITY REGARDING THE MANUFACTURING/PROCESSING, PACKING OR HOLDING OF FOOD) **(OPTIONAL)**

○ Warehouse / Holding Facility (e.g., storage facilities, including storage tanks, grain elevators)	
○ Acidified / Low Acid Food Processor	○ Labeler / Relabeler
○ Interstate Conveyance Caterer/Catering Point	○ Manufacturer / Processor
○ Molluscan Shellfish Establishment	○ Repacker / Packer
○ Commissary	○ Salvage Operator (Reconditioner)
○ Contract Sterilizer	○ Animal food manufacturer / processor / holder

Section 10 – TYPE OF STORAGE (FOR FACILITIES THAT ARE PRIMARILY HOLDERS) (OPTIONAL)

○ Ambient (neither frozen nor refrigerated) Storage	○ Refrigerated Storage	○ Frozen Storage

Section 11a - GENERAL PRODUCT CATEGORIES - FOOD FOR HUMAN CONSUMPTION
To be completed by all food facilities. Please see instructions for further examples.
IF NONE OF THE MANDATORY CATEGORIES BELOW APPLY, SELECT BOX 37.

○ 1. ALCOHOLIC BEVERAGES [21 CFR 170.3 (n) (2)]	○ 7. CHEESE AND CHEESE PRODUCTS [21 CFR 170.3 (n) (5)]
○ 2. BABY (INFANT AND JUNIOR) FOOD PRODUCTS Including Infant Formula (Optional Selection)	○ 8. CHOCOLATE AND COCOA PRODUCTS [21 CFR 170.3 (n) (3), (9), (38), (43)]
○ 3. BAKERY PRODUCTS, DOUGH MIXES, OR ICINGS [21 CFR 170.3 (n) (1), (9)]	○ 9. COFFEE AND TEA [21 CFR 170.3 (n) (3), (7)]
○ 4. BEVERAGE BASES [21 CFR 170.3 (n) (3), (16), (35)]	○ 10. COLOR ADDITIVES FOR FOODS [21 CFR 170.3 (o) (4)]
○ 5. CANDY WITHOUT CHOCOLATE, CANDY SPECIALITIES & CHEWING GUM [21 CFR 170.3 (n) (6), (9), (25), (38)]	○ 11. DIETARY CONVENTIONAL FOODS OR MEAL REPLACEMENTS (includes Medical Foods) [21 CFR 170.3 (n) (31)]
○ 6. CEREAL PREPARATIONS, BREAKFAST FOODS, QUICK COOKING/INSTANT CEREALS [21 CFR 170.3 (n) (4)]	

Form 3537 (1/03)

Form Approval: OMB No. 0910-xxxx
Expiration Date:
See OMB Statement at end of form

DHHS/FDA - FOOD FACILITY REGISTRATION FORM

Section 11a - GENERAL PRODUCT CATEGORIES - FOOD FOR HUMAN CONSUMPTION (CONTINUED)

To be completed by all food facilities. Please see instructions for further examples.
IF NONE OF THE MANDATORY CATEGORIES BELOW APPLY, SELECT BOX 37.

12. DIETARY SUPPLEMENTS

- ○ Proteins, Amino Acids, Fats and Lipid Substances [21 CFR 170.3 (o) (20)]
- ○ Vitamins and Minerals [21 CFR 170.3 (o) (20)]
- ○ Animal By-Products and Extracts (Optional Selection)
- ○ Herbals and Botanicals (Optional Selection)

○ 13. DRESSINGS AND CONDIMENTS [21 CFR 170.3 (n) (8), (12)]

○ 14. FISHERY/SEAFOOD PRODUCTS [21 CFR 170.3 (n) (13), (15), (39), (40)]

○ 15. FOOD ADDITIVES, GENERALLY RECOGNIZED AS SAFE (GRAS) INGREDIENTS, OR OTHER INGREDIENTS USED FOR PROCESSING [21 CFR 170.3 (n) (42); 21 CFR 170.3 (o) (1), (2), (3), (5), (6), (7), (8), (9), (10), (11), (12), (13), (14), (15), (16), (17), (18), (19), (22), (23), (24), (25), (26), (27), (28), (29), (30), (31), (32)

○ 16. FOOD SWEETENERS (NUTRITIVE) [21 CFR 170.3 (n) (9), (41), 21 CFR 170.3 (o) (21)]

○ 17. FRUITS AND FRUIT PRODUCTS [21 CFR 170.3 (n) (16), (27), (28), (35), (43)]

○ 18. GELATIN, RENNET, PUDDING MIXES, OR PIE FILLINGS [21 CFR 170.3 (n) (22)]

○ 19. ICE CREAM AND RELATED PRODUCTS [21 CFR 170.3 (n) (20), (21)]

○ 20. IMITATION MILK PRODUCTS [21 CFR 170.3 (n) (10)]

○ 21. MACARONI OR NOODLE PRODUCTS [21 CFR 170.3 (n) (23)]

○ 22. MEAT, MEAT PRODUCTS AND POULTRY (FDA REGULATED) [21 CFR 170.3 (n) (17), (18), (29), (34), (39), (40)]

○ 23. MILK, BUTTER, OR DRIED MILK PRODUCTS [21 CFR 170.3 (n) (12), (30), (31)]

○ 24. MULTIPLE FOOD DINNERS, GRAVIES, SAUCES AND SPECIALTIES [21 CFR 170.3 (n) (11), (14), (17), (18), (23), (24), (29), (34), (40)]

○ 25. NUT AND EDIBLE SEED PRODUCTS [21 CFR 170.3 (n) (26), (32)]

○ 26. PREPARED SALAD PRODUCTS [21 CFR 170.3 (n) (11), (17), (18), (22), (29), (34), (35)]

○ 27. SHELL EGG AND EGG PRODUCTS [21 CFR 170.3 (n) (11), (14)]

○ 28. SNACK FOOD ITEMS (FLOUR, MEAL OR VEGETABLE BASE) [21 CFR 170.3 (n) (37)]

○ 29. SPICES, FLAVORS, AND SALTS [21 CFR 170.3 (n) (26)]

○ 30. SOUPS [21 CFR 170.3 (n) (39), (40)]

○ 31. SOFT DRINKS AND WATERS [21 CFR 170.3 (n) (3), (35)]

○ 32. VEGETABLES AND VEGETABLE PRODUCTS [21 CFR 170.3 (n) (19), (36)]

○ 33. VEGETABLE OILS (INCLUDES OLIVE OIL) [21 CFR 170.3 (n) (12)]

○ 34. VEGETABLE PROTEIN PRODUCTS (SIMULATED MEATS) [21 CFR 170.3 (n) (33)]

○ 35. WHOLE GRAINS, MILLER GRAIN PRODUCTS (FLOURS),OR STARCH [21 CFR 170.3 (n) (1), (23)]

○ 36. MOST/ALL HUMAN FOOD PRODUCT CATEGORIES (Optional Selection)

○ 37. NONE OF THE ABOVE MANDATORY CATEGORIES

Form 3537 (1/03)

Form Approval: OMB No. 0910-xxxx
Expiration Date:
See OMB Statement at end of form

DHHS/FDA - FOOD FACILITY REGISTRATION FORM

Section 11b - GENERAL PRODUCT CATEGORIES – FOOD FOR ANIMAL CONSUMPTION (OPTIONAL)

○ 1. GRAIN PRODUCTS (E.G., BARLEY, GRAIN SORGHUMS, MAIZE, OAT, RICE, RYE AND WHEAT)	○ 14. MILK PRODUCTS
○ 2. OILSEED PRODUCTS (E.G., COTTONSEED, SOYBEANS, OTHER OIL SEEDS)	○ 15. MINERALS
○ 3. ALFALFA AND LESPEDEZA PRODUCTS	○ 16. MISCELLANEOUS AND SPECIAL PURPOSE PRODUCTS
○ 4. AMINO ACIDS	○ 17. MOLASSES
○ 5. ANIMAL-DERIVED PRODUCTS	○ 18. NON-PROTEIN NITROGEN PRODUCTS
○ 6. BREWER PRODUCTS	○ 19. PEANUT PRODUCTS
○ 7. CHEMICAL PRESERVATIVES	○ 20. RECYCLED ANIMAL WASTE PRODUCTS
○ 8. CITRUS PRODUCTS	○ 21. SCREENINGS
○ 9. DISTILLERY PRODUCTS	○ 22. VITAMINS
○ 10. ENZYMES	○ 23. YEAST PRODUCTS
○ 11. FATS AND OILS	○ 24. MIXED FEED (POULTRY, LIVESTOCK, AND EQUINE)
○ 12. FERMENTATION PRODUCTS	○ 25. PET FOOD
○ 13. MARINE PRODUCTS	○ 26. MOST/ALL ANIMAL FOOD PRODUCT CATEGORIES

Section 12 – OWNER, OPERATOR, OR AGENT IN CHARGE INFORMATION

NAME OF ENTITY OR INDIVIDUAL WHO IS THE OWNER, OPERATOR, OR AGENT IN CHARGE

PROVIDE THE FOLLOWING INFORMATION, IF DIFFERENT FROM ALL OTHER SECTIONS ON THE FORM. IF INFORMATION IS THE SAME AS ANOTHER SECTION OF THE FORM, CHECK WHICH SECTION:

SECTION 2 ○ SECTION 3 ○ SECTION 4 ○ SECTION 7 ○

STREET ADDRESS, Line 1:	
STREET ADDRESS, Line 2:	
CITY:	STATE:
ZIP CODE (POSTAL CODE):	PROVINCE/TERRITORY:
COUNTRY:	PHONE NUMBER (Include Area/Country Code):
FAX NUMBER (OPTIONAL; Include Area/ Country Code):	E-MAIL ADDRESS (OPTIONAL):

Form 3537 (1/03)

Form Approval: OMB No. 0910-xxxx
Expiration Date:
See OMB Statement at end of form

DHHS/FDA - FOOD FACILITY REGISTRATION FORM

Section 13 - CERTIFICATION STATEMENT	
The owner, operator, or agent in charge of the facility, or an individual authorized by the owner, operator, or agent in charge of the facility, must submit this form. By submitting this form to FDA, or by authorizing an individual to submit this form to FDA, the owner, operator, or agent in charge of the facility certifies that the above information is true and accurate. An individual (other than the owner, operator, or agent in charge of the facility) who submits the form to the FDA also certifies that the above information submitted is true and accurate and that he/she is authorized to submit the registration on the facility's behalf. An individual authorized by the owner, operator, or agent in charge must below identify by name the individual who authorized submission of the registration. Under 18 U.S.C. 1001, anyone who makes a materially false, fictitious, or fraudulent statement to the U.S. Government is subject to criminal penalties.	
SIGNATURE OF SUBMITTER	
PRINT NAME OF THE SUBMITTER	
CHECK ONE BOX: ○ A. OWNER, OPERATOR OR AGENT IN CHARGE (STOP HERE, FORM IS COMPLETED) ○ B. INDIVIDUAL AUTHORIZED TO SUBMIT THE REGISTRATION (FILL IN BELOW)	
IF YOU CHECKED BOX B ABOVE, INDICATE WHO AUTHORIZED YOU TO SUBMIT THE REGISTRATION: ○ OWNER, OPERATOR, OR AGENT IN CHARGE (STOP HERE, FORM IS COMPLETED) ○ _____ NAME OF INDIVIDUAL WHO AUTHORIZED REGISTRATION ON BEHALF OF OWNER, OPERATOR, OR AGENT IN CHARGE (FILL IN ADDRESS BELOW)	
ADDRESS INFORMATION FOR THE AUTHORIZING INDIVIDUAL:	
AUTHORIZING INDIVIDUAL STREET ADDRESS, Line 1:	
AUTHORIZING INDIVIDUAL STREET ADDRESS, Line 2:	
CITY:	STATE:
ZIP CODE (POSTAL CODE):	PROVINCE/TERRITORY:
COUNTRY:	PHONE NUMBER (Include Area/Country Code):
FAX NUMBER (OPTIONAL; Include Area/ Country Code):	E-MAIL ADDRESS (OPTIONAL):

MAIL COMPLETED FORM TO U.S. FOOD AND DRUG ADMINISTRATION, HFS-681, 5600 FISHERS LANE, ROCKVILLE, MD 20857, OR FAX IT TO (301) 210-0247.

FDA USE ONLY	
DATE REGISTRATION FORM RECEIVED	**DATE NOTIFICATION SENT TO FACILITY**

Public reporting burden for this collection of information is estimated to average between 1 and 12 hours per response, including the time for reviewing instructions, searching existing data sources, gathering and maintaining the data needed, and completing and reviewing the collection of information. Send comments regarding this burden estimate or any other aspect of this collection of information, including suggestions for reducing this burden to:

Department of Health and Human Services
Food and Drug Administration
CFSAN (HFS-024)
5100 Paint Branch Parkway
College Park, MD 20740

An agency may not conduct or sponsor, and a person is not required to respond to a collection of information unless it displays a currently valid OMB control number

Form 3537 (1/03)

Form Approval: OMB No. 0910-xxxx
Expiration Date:
See OMB Statement at end of form

FDA USE ONLY

USE BLUE OR BLACK INK ONLY

DHHS/FDA CANCELLATION OF FOOD FACILITY REGISTRATION FORM

FACILITY REGISTRATION NUMBER:	**PIN:**
○ **DOMESTIC REGISTRATION**	○ **FOREIGN REGISTRATION**

FACILITY NAME / ADDRESS INFORMATION

FACILITY NAME:	
FACILITY STREET ADDRESS, Line 1:	
FACILITY STREET ADDRESS, Line 2:	
CITY:	**STATE:**
ZIP CODE (POSTAL CODE):	**PROVINCE/TERRITORY:**
COUNTRY:	

CERTIFICATION STATEMENT

The owner, operator, or agent in charge of the facility, or an individual authorized by the owner, operator, or agent in charge of the facility, must submit this form. By submitting this form to FDA, or by authorizing an individual to submit this form to FDA, the owner, operator, or agent in charge of the facility certifies that the above information is true and accurate. An individual (other than the owner, operator, or agent in charge of the facility) who submits the form to the FDA also certifies that the above information submitted is true and accurate and that he/she is authorized to submit the cancellation on the facility's behalf. An individual authorized by the owner, operator, or agent in charge must below identify by name the individual who authorized submission of the cancellation. Under 18 U.S.C. 1001, anyone who makes a materially false, fictitious, or fraudulent statement to the U.S. Government is subject to criminal penalties.

SIGNATURE OF SUBMITTER

PRINT NAME OF THE SUBMITTER

CHECK ONE BOX: ○ A. OWNER, OPERATOR OR AGENT IN CHARGE (STOP HERE, FORM IS COMPLETED)
○ B. INDIVIDUAL AUTHORIZED TO SUBMIT THE CANCELLATION (FILL IN BELOW)

IF YOU CHECKED BOX B ABOVE, INDICATE WHO AUTHORIZED YOU TO SUBMIT THE CANCELLATION:

○ OWNER, OPERATOR, OR AGENT IN CHARGE (STOP HERE, FORM IS COMPLETED)

○ _____ NAME OF INDIVIDUAL WHO AUTHORIZED CANCELLATION ON BEHALF OF OWNER, OPERATOR, OR AGENT IN CHARGE (FILL IN BELOW)

ADDRESS INFORMATION FOR THE AUTHORIZING INDIVIDUAL:

AUTHORIZING INDIVIDUAL ADDRESS, Line 1:	
AUTHORIZING INDIVIDUAL ADDRESS, Line 2:	
CITY:	STATE:
ZIP CODE (POSTAL CODE):	PROVINCE/TERRITORY:
COUNTRY:	PHONE NUMBER (Include Area/Country Code):

FDA USE ONLY

DATE CANCELLATION FORM RECEIVED	**DATE CONFIRMATION SENT TO FACILITY**

MAIL COMPLETED FORM TO U.S. FOOD AND DRUG ADMINISTRATION, HFS-681, 5600 FISHERS LANE, ROCKVILLE, MD 20857, OR FAX IT TO (301) 210-0247.

Public reporting burden for this collection of information is estimated to average 1 hour per response, including the time for reviewing instructions, searching existing data sources, gathering and maintaining the data needed, and completing and reviewing the collection of information. Send comments regarding this burden estimate or any other aspect of this collection of information, including suggestions for reducing this burden to:

Department of Health and Human Services
Food and Drug Administration
CFSAN (HFS-024)
5100 Paint Branch Parkway
College Park, MD 20740

An agency may not conduct or sponsor, and a person is not required to respond to a collection of information, unless it displays a currently valid OMB control number.

Form 3537a (1/03)

[FR Doc. 03–25849 Filed 10–9–03; 8:45 am]
BILLING CODE 4160–01–C

DEPARTMENT OF HEALTH AND HUMAN SERVICES

Food and Drug Administration

21 CFR Part 1

[Docket No. 02N–0278]

RIN 0910–AC41

Prior Notice of Imported Food Under the Public Health Security and Bioterrorism Preparedness and Response Act of 2002

AGENCY: Food and Drug Administration, HHS.

ACTION: Interim final rule; request for comments.

SUMMARY: The Food and Drug Administration (FDA) is issuing an interim final regulation that requires the submission to FDA of prior notice of food, including animal feed, that is imported or offered for import into the United States. The interim final rule implements the Public Health Security and Bioterrorism Preparedness and Response Act of 2002 (the Bioterrorism Act), which requires prior notification of imported food to begin on December 12, 2003, even in the absence of a final regulation. The interim final rule requires that the prior notice be submitted to FDA electronically via either the Bureau of Customs and Border Protection (CBP) Automated Broker Interface (ABI) of the Automated Commercial System (ACS) or the FDA Prior Notice System Interface (FDA PN System Interface). The information must be submitted and confirmed electronically as facially complete by FDA for review no more than 5 days and no less than 8 hours (for food arriving by water), 4 hours (for food arriving by air or land/rail), and 2 hours (for food arriving by land/road) before the food arrives at the port of arrival. Food imported or offered for import without adequate prior notice is subject to refusal and, if refused, must be held.

DATES: This interim final rule is effective December 12, 2003. Submit written or electronic comments by December 24, 2003.

ADDRESSES: Submit written comments to the Division of Dockets Management (HFA–305), Food and Drug Administration, 5630 Fishers Lane, rm. 1061, Rockville, MD 20852. Submit electronic comments to *http://www.fda.gov/dockets/ecomments*.

FOR FURTHER INFORMATION CONTACT: Deborah Ralston, Office of Regulatory Affairs, Office of Regional Operations, Food and Drug Administration, 5600 Fishers Lane, Rockville, MD 20857, 301–443–6230.

SUPPLEMENTARY INFORMATION:

Table of Contents

I. Background
A. Current Process—Admissibility Determinations Under Section 801(a) of the FD&C Act
B. Process After December 12, 2003—Prior Notice Determination Followed by Admissibility Determination
II. Overview of the Interim Final Rule and Significant Changes Made to the Proposed Rule
A. ''What Definitions Apply to This Subpart?'' (Section 1.276 Proposed as § 1.277)
B. ''What is the Scope of This Subpart?'' (Section 1.277 Proposed as § 1.276)
C. ''Who Is Authorized to Submit Prior Notice?'' (Section 1.278 Proposed as § 1.285)
D. ''When Must Prior Notice Be Submitted to FDA?'' (Section 1.279 Proposed as § 1.286)
E. ''How Must You Submit Prior Notice?'' (Section 1.280 Proposed as § 1.287)
F. ''What Information Must Be in a Prior Notice?'' (Section 1.281 Proposed as § 1.288)
G. ''What Must You Do If Information Changes After You Have Received Confirmation of a Prior Notice From FDA?'' (Section 1.282 Proposed §§ 1.289 to 1.294)
H. ''What Happens to Food That Is Imported or Offered for Import Without Adequate Prior Notice?'' (Section 1.283 Proposed as § 1.278)
I. ''What Are the Other Consequences of Failing to Submit Adequate Prior Notice or Otherwise Failing to Comply With This Subpart?'' (Section 1.284 Proposed as § 1.278)
J. ''What Happens to Food That Is Imported or Offered for Import from Unregistered Facilities That Are Required to Register Under 21 CFR Part 1, Subpart H?'' (Section 1.285)
III. Comments on the Proposed Rule
A. General Comments and Outreach
B. Foreign Trade Issues
C. ''What Definitions Apply to This Subpart?'' (Section 1.276 Proposed as § 1.277)
D. ''What Is the Scope of This Subpart?'' (Section 1.277 Proposed as § 1.276)
E. ''Who Is Authorized to Submit Prior Notice?'' (Section 1.278 Proposed as § 1.285)
F. ''When Must Prior Notice Be Submitted to FDA?'' (Section 1.279 Proposed as § 1.286)
G. ''How Must You Submit Prior Notice?'' (Section 1.280 Proposed as § 1.287)
H. ''What Information Must Be in a Prior Notice?'' (Section 1.281 Proposed as § 1.288)
I. ''What Must You Do If Information Changes After You Have Received Confirmation of a Prior Notice From FDA?'' (Section 1.282 Proposed as §§ 1.289 to 1.294)
J. ''What Happens to Food That Is Imported or Offered for Import Without Adequate Prior Notice?'' (Section 1.283) and ''What Are the Other Consequences of Failing to Submit Adequate Prior Notice or Otherwise Failing to Comply With This Subpart?'' (§ 1.284 Proposed as § 1.278)
K. ''What Happens to Food That Is Imported or Offered for Import From Unregistered Facilities That Are Required to Register Under Section 415 of the FD&C Act, 21 U.S.C. 350d and 21 CFR Part 1, Subpart H?'' (Section 1.285)
IV. Issuance of an Interim Final Rule and Effective Date; Comments
V. Analysis of Economic Impacts
A. Final Regulatory Impact Analysis
1. Need for Regulation
2. Interim Final Rule Coverage
3. Regulatory Options Considered
4. Summary of Options
5. Benefits
B. Small Entity Analysis (or Final Regulatory Flexibility Analysis)
1. Number of Establishments Affected
2. Costs per Entity
3. Additional Flexibility Considered
C. Unfunded Mandates
D. Small Business Regulatory Enforcement Fairness Act (SBREFA) Major Rule
VI. Paperwork Reduction Act of 1995
VII. Analysis of Environmental Impact
VIII. Federalism
IX. References

I. Background

In the **Federal Register** of February 3, 2003 (68 FR 5428), the Department of Health and Human Services (FDA) and the Department of Treasury (U.S. Customs Service) issued a joint notice of proposed rulemaking requiring submission to FDA of prior notice of human and animal food that is imported or offered for import into the United States. The events of September 11, 2001, had highlighted the need to ensure that FDA had additional tools to help prevent a food-related bioterrorism event or other public health emergency. Congress responded by passing the Public Health Security and Bioterrorism Preparedness and Response Act of 2002 (the Bioterrorism Act) (Pub. L. 107–188), which was signed into law on June 12, 2002. The Bioterrorism Act includes a provision in Title III (Protecting Safety and Security of Food and Drug Supply), Subtitle A'Protection of Food Supply, section 307, which changes when FDA will receive certain information about imported foods by requiring the Secretary of Health and Human Services (the Secretary), after consultation with the Secretary of the Treasury, to issue an implementing regulation by December 12, 2003, to require prior notification to FDA of food that is imported or offered for import into the United States. Under

the Homeland Security Act of 2002 (Pub. L. 107–296), the Secretary of the Treasury has delegated all relevant Customs revenue authorities to the Secretary of Homeland Security who has, in turn, delegated them to the Commissioner of the Bureau of Customs and Border Protection (CBP or Customs). Thus, we are issuing this interim final rule jointly with the Secretary of Homeland Security.

Section 307 of the Bioterrorism Act amends the Federal Food, Drug, and Cosmetic Act (the FD&C Act) by adding section 801(m) (21 U.S.C. 381(m)) and amending section 301 (21 U.S.C. 331). (In the regulation itself, which is codified in Title 21 of the Code of Federal Regulations, the Federal Food, Drug, and Cosmetic Act is referred to as ''the act.'' Thus, when the regulation is quoted in this preamble the term ''the act'' will be used to refer to the Federal Food, Drug, and Cosmetic Act. However, in this preamble we refer to the Federal Food, Drug, and Cosmetic Act as ''the FD&C Act'' in the preamble to distinguish it from the Bioterrorism Act.)

The Bioterrorism Act also requires FDA to issue regulations requiring certain food establishments to register with FDA (section 305), directs FDA to issue regulations regarding maintenance of certain records (section 306), and grants FDA the authority to administratively detain food (section 303). FDA has published proposed rules implementing section 305 of the Bioterrorism Act (68 FR 5378, February 3, 2003), section 303 of the Bioterrorism Act (68 FR 25242, May 9, 2003), and section 306 of the Bioterrorism Act (68 FR 25188, May 9, 2003). The interim final rule implementing the food facility registration requirements is published elsewhere in this issue of the **Federal Register**.

A. Current Process—Admissibility Determinations Under Section 801(a) of the FD&C Act

Section 801(a) of the FD&C Act sets out current standards and procedures for FDA review of imports under its jurisdiction. Section 801(a) provides for examination of imports and also authorizes FDA to refuse admission of imports that appear, from examination or otherwise, to be, *inter alia*, adulterated or misbranded. When an FDA-regulated product is imported, generally customs brokers submit entry information to CBP on behalf of the importers of record. CBP then provides entry information to FDA to enable admissibility decisions to be made. Under CBP authorities, entry of the merchandise can be made up to 15 days after arrival.

CBP regulations provide for different kinds of entries. Commonly, merchandise is the subject of an entry for consumption or warehouse (*i.e.*, unrestricted, general use) under a basic importation and entry bond at the port of arrival. A warehouse entry is a CBP entry procedure as described in 19 CFR part 144. It allows imported product (with some restrictions) to be entered without payment of duty, provided it is kept in a bonded warehouse and not distributed. CBP authorities also allow for an Immediate Transportation or IT entry of merchandise for transportation under a custodial bond from the port of arrival to another port where the consumption or warehouse entry will be made or the product will be admitted into a foreign trade zone (FTZ) located outside of the port area. In addition, if the merchandise is going to an FTZ in the port area, FTZ admission documents are presented to CBP. Finally, a transportation and exportation (or T&E) entry may be filed if the merchandise is to be transshipped from the port of arrival through the United States to another port for export.

FDA currently receives electronic information about entries from CBP through CBP's ABI of the ACS. FDA receives this information through its Operational and Administrative System for Import Support (OASIS). The entry types currently transmitted through the ABI/ACS interface with OASIS include consumption entries and warehouse entries but not IT entries, T&E entries, or admissions into FTZs. The customs broker or self-filer electronically submits entry information to ABI/ACS, including: The identification of the product by the Harmonized Tariff Schedule (HTS) code; the entry type; the entry number (including both the ACS line number and the FDA line number); the arrival date; the port; the port of unlading; the carrier code; the vessel name and voyage, flight or trip number; importer and ultimate consignee; the quantity; value; country of origin; bill of lading or airway bill number; the manufacturer; the importer of record; and the ultimate consignee. The HTS codes are flagged to indicate which products will require FDA review; all FDA-regulated products are covered, not just foods. The additional information that is currently transmitted through the ABI/ACS interface to FDA includes: The FDA manufacturer; the FDA shipper, the FDA Country of Production (country of origin); the complete FDA product code; a description of the food in common business terms; the quantity for each FDA line, and, as ''Affirmations of Compliance,'' information specific to certain products, such as the Food Canning Establishment (FCE) Number.[1] CBP regulations do not mandate electronic transmission of entry information; therefore, some entries are filed in paper. If a ''paper'' entry is filed, it is customary for CBP to require that copies of entry documentation by submitted to FDA. The entry documents contain the same information as the electronic filing, typically the information required on CBP's Entry/Immediate Delivery (CF3461), and a copy of the foreign invoice. The paper entries may be presented at the time of arrival or after.

After information is transmitted from ABI/ACS, OASIS performs additional validations on the data. If no corrections from the customs broker or self-filer are needed, it screens the entry information against FDA admissibility criteria. If the FDA electronic review determines that further evaluation of the information or article of food is not necessary, the system transmits a message back through the FDA/CBP interface that the article of food ''may proceed without FDA examination.'' If further evaluation is necessary, FDA staff will review the entry information and may request additional information necessary to make an admissibility determination or may examine or sample the product. Section 801(b) of the FD&C Act provides for the release of FDA regulated products to the importer or owner, under bond, before the FDA admissibility decision is made. Accordingly, FDA examination may take place at a location to which the product has been moved. Because there are no restrictions on movement, the product may be at the border, within the confines of a port, at a public storage facility in the vicinity of the importer, or at the ultimate consignee's warehouse. Finally, if the FDA electronic review indicates that the product appears ''by examination or otherwise'' to be subject to refusal of admission under section 801(a) of the FD&C Act (*e.g.*, appears to be adulterated or misbranded), the FDA reviewer will evaluate the entry information based on FDA guidance, take appropriate action, and notify the importer as well as the customs broker.

Under current laws and regulations, FDA may receive the information about some food imports some days after the food has arrived in the United States,

[1] Affirmations of Compliance are data elements that a customs broker or self-filer currently uses when transmitting certain information to FDA through ABI/ACS to OASIS. Each provides a mechanism to indicate (or affirm) compliance with a specific FDA regulatory requirement.

has been moved from the port of arrival, and has been delivered to the ultimate consignee. While FDA may ultimately receive electronic entry notification of IT entries when the consumption entry is later filed, FDA does not receive electronic notification with information about food entered for transshipment for export or when the food is admitted to an FTZ.

The admissibility standard in section 801(a) of the FD&C Act largely focuses on whether the article of food appears to have been safely produced, contains no contaminants or illegal additives or residues, and is properly labeled. Section 801(a) provides that an article of food is subject to refusal of admission if it ''appears, from physical examination or otherwise': (1) To have been manufactured, processed, or packed under insanitary conditions; (2) to be forbidden or restricted in sale in the country in which it was produced or from which it was exported; or (3) to be adulterated or misbranded. The food adulteration and misbranding provisions (sections 402 and 403 of the FD&C Act) set out most of the FD&C Act's safety and labeling standards for foods.

B. Process After December 12, 2003—Prior Notice Determination Followed by Admissibility Determination

Section 801(m) provides that an article of food is subject to refusal of admission if adequate prior notice has not been provided to FDA. Thus, the refusal standard in section 801(m) focuses in the first instance on whether the requisite information has been provided in a timely fashion, while the refusal standard in section 801(a) focuses on whether the article was safely produced, contains no contaminants or illegal additives or residues, and is properly labeled.

By adding the prior notice requirement to the FD&C Act, Congress, in the Bioterrorism Act, changed when information about FDA-regulated food imports must be provided to FDA and what happens if the information is not provided. The prior notice provisions require that notice must be provided on imported food shipments to FDA before arrival. If adequate notice is not provided, section 801(m) of the FD&C Act provides that the food is subject to refusal, and that refused food must be held until adequate notice is given and may not be delivered to the importer, owner, or consignee. The stated purpose of requiring notice of imported food shipments before arrival in the United States is to enable FDA to conduct inspections of imported food at U.S. ports (see section 801(m)(1) of the FD&C Act). Thus, FDA intends to use prior notice information to make decisions about which inspections to conduct at the time of arrival. Currently, we intend to focus on conducting these inspections when our information suggests the potential for a significant risk to public health.

As explained in greater detail in the following paragraphs, FDA and CBP are coordinating FDA's new prior notice requirements with CBP's and FDA's existing entry requirements to the greatest extent possible. Thus, the interim final rule allows prior notice to be submitted electronically to FDA through either ABI/ACS or the FDA Prior Notice (PN) System Interface. The HTS codes will be flagged within ABI/ACS to indicate which HTS codes contain foods subject to prior notice requirements. In addition, the ABI/ACS interface will provide a new transaction for transmission of prior notice information on IT and T&E entries, and FTZ admissions, *e.g.*, the types of entries of which FDA was not aware or did not know about until many days after arrival in the United States. This will allow for FDA electronic screening and FDA staff evaluation of the information so that FDA can assess, before the food arrives, whether to inspect and to be prepared to conduct that inspection upon arrival.

FDA expects approximately 90 percent of prior notice submissions for all importations of foods to be transmitted by a customs broker or self-filer through the ABI/ACS interface to FDA. FDA estimates that only 10 percent (or less) of the total importations cannot be accommodated by the ABI/ACS interface and, therefore, will be submitted via the FDA PN System Interface.

In addition to requiring submission of the information currently sent to FDA for admissibility determinations, information identifying the grower (if known), the country from which the article is shipped, and anticipated arrival information is also required for prior notice. If all of the prior notice information is transmitted through the ABI/ACS interface, no additional transmission of information for admissibility determinations under section 801(a) of the FD&C Act will be necessary. If prior notice is submitted through the FDA PN System Interface, additional transmission through ABI/ACS may be necessary for CBP purposes and FDA's admissibility evaluation.

Regardless of the mode of transmission, the prior notice information will undergo both a validation process and screening in OASIS for food safety and security criteria. After the validation step is complete, the prior notice will be confirmed by FDA for review and a reply message sent to the transmitter indicating the prior notice has been received and confirmed for FDA review. The form of this reply messaging depends upon the mode of initial transmission: ABI/ACS or FDA PN System Interface. The clock starts for determining if prior notice was timely when this prior notice confirmation message is sent by FDA.

If the FDA system does not indicate that further evaluation of or action on the notice or article of food is necessary for prior notice purposes, the system will transmit a message back through the OASIS to ABI/ACS interface for CBP that the article of food ''may be conditionally released under section 801(b) of the act.'' However, if additional evaluation of the prior notice information is necessary, FDA headquarters staff, operating 24 hours a day, 7 days a week, will review and assess the information and may initiate an examination or other action by FDA or CBP of the article of food at the port of arrival or elsewhere, or in the case of rail shipments, within the confines of the closest appropriate examination site.

In addition, the OASIS system review will determine if further staff evaluation of the article of food is necessary for admissibility determinations under section 801(a) of the FD&C Act (*e.g.*, subject to the guidance in an import alert). If so, FDA staff in the appropriate district office will take action, which, in addition to the review and evaluation of the submitted information or other documentation, could include an examination of the article of food for admissibility purposes. This admissibility examination may take place at the border but may also take place at an examination site, a public warehouse, or other appropriate locations. If FDA determines that refusal under section 801(a) of the FD&C Act is appropriate, it will follow appropriate procedures.

II. Overview of the Interim Final Rule and Significant Changes Made to the Proposed Rule

The highlights of this interim final rule are described briefly in the following paragraphs and are discussed in more detail later in the preamble.

A. ''What Definitions Apply to This Subpart?'' (Section 1.276 Proposed as § 1.277)

- The term ''the act'' was not changed.
- The term ''calendar day'' was not changed.

• The term ''country from which the article originates'' was added and defined as ''FDA Country of Production.''

• The term ''country from which the article of food was shipped'' was revised to ''country from which the article is shipped.''

• The term ''FDA Country of Production'' replaces the term ''originating country.'' For an article of food that is in its natural state, the FDA Country of Production is the country where the article of food was grown, including harvested or collected and readied for shipment to the United States. If an article of food is wild fish that was caught or harvested outside the waters of the United States by a vessel that is not registered in the United States, the FDA Country of Production is the country in which the vessel is registered. If an article of food that is in its natural state was grown, including harvested or collected and readied for shipment, in a Territory, the FDA Country of Production is the United States. For an article of food that is no longer in its natural state, the FDA Country of Production is the country where the article was made; except that, if an article of food is made from wild fish aboard a vessel, the FDA Country of Production is the country in which the vessel is registered. If an article of food that is no longer in its natural state was made in a Territory, the FDA Country of Production is the United States.

• The term ''food'' has been redefined. The new definition excludes ''food contact substances'' as defined in section 409(h)(6) of the FD&C Act (21 U.S.C. 348(h)(6)) and ''pesticides'' as defined in 7 U.S.C. 136(u).

• The term ''grower'' has been added to the interim final rule. It means a person who engages in growing and harvesting or collecting crops (including botanicals), raising animals (including fish, which includes seafood), or both.

• The term ''international mail'' has been added to the interim final rule. The term ''international mail'' means foreign national mail services, but not express carriers, express consignment operators, or other private delivery services.

• The term ''no longer in its natural state'' has been added to the interim final rule. The term means that an article of food has been made from one or more ingredients or synthesized, prepared, treated, modified, or manipulated. Examples of activities that render food no longer in its natural state are cutting, peeling, trimming, washing, waxing, eviscerating, rendering, cooking, baking, freezing, cooling, pasteurizing, homogenizing, mixing, formulating, bottling, milling, grinding, extracting juice, distilling, labeling, or packaging. However, crops that have been cleaned (*e.g.*, dusted, washed), trimmed, or cooled attendant to harvest or collection or treated against pests, waxed, or polished are still in their natural state for purposes of the prior notice interim final rule. Likewise, whole fish headed, eviscerated, or frozen attendant to harvest are still in their natural state for purposes of the prior notice interim final rule.

• The term ''port of entry'' has been defined, as having the meaning given in 19 CFR 101.1.

• The term ''port of arrival'' has been added to the interim final rule. The interim final rule defines ''port of arrival'' to mean ''the water, air, or land port at which the article of food is imported or offered for import into the United States, *i.e.*, the port where the article of food first arrives in the United States.''

• The term ''registration number'' has been added to the interim final rule. Registration number refers to the registration number assigned by FDA under section 415 of the FD&C Act, 21 U.S.C. 350d, and 21 CFR part 1, subpart H.

• The term ''shipper'' has been added to the interim final rule. The interim final rule defines ''shipper'' as ''the owner or exporter of the article of food who consigns and ships the article from a foreign country or the person who sends an article of food by international mail to the United States.''

• The term ''United States'' has been added to the interim final rule. It defines ''United States'' as the Customs territory of the United States, *i.e.*, ''the 50 States, the District of Columbia, and the Commonwealth of Puerto Rico.''

• The term ''you'' has been revised to reflect the removal of limitations on who is authorized to submit prior notice.

B. ''What is the Scope of This Subpart?'' (Section 1.277 Proposed as § 1.276)

This provision has been revised. Section 1.277(a) clarifies that the interim final rule applies to all food for humans and other animals that is imported or offered for import into the United States. This covers food for use, storage, or distribution in the United States, and includes food for gifts, trade and quality assurance/quality control samples, food for transshipment through the United States to another country, food for future export, and food for use in a U.S. FTZ. Section 1.277(b) sets out the exclusions from prior notice. It excludes food for an individual's personal use when it is carried by or otherwise accompanies the individual when arriving in the United States (*i.e.*, for consumption by themselves, family and friends, not for sale or other distribution); food that was made by an individual in his/her personal residence and sent by that individual as a personal gift (*i.e.*, for nonbusiness reasons) to an individual in the United States; food that is imported then exported without leaving the port of arrival until export; and meat food products, poultry products, and egg products that, at the time of importation, are subject to the exclusive jurisdiction of the U.S. Department of Agriculture (USDA) under the Federal Meat Inspection Act (21 U.S.C. 601 *et seq.*), the Poultry Products Inspection Act (21 U.S.C. 451 *et seq.*), or the Egg Products Inspection Act (21 U.S.C. 1031 *et seq.*).

C. ''Who Is Authorized to Submit Prior Notice?'' (Section 1.278 Proposed as § 1.285)

This provision has been revised. The interim final rule has been revised to remove the restriction that the submitter be the U.S. importer or purchaser. The interim final rule provides that any person with knowledge of the required information may submit prior notice or have it transmitted on their behalf.

D. ''When Must Prior Notice Be Submitted to FDA?'' (Section 1.279 Proposed as § 1.286)

This provision has been revised. FDA had proposed that all information required in the prior notice be submitted to FDA no later than 12 noon of the calendar day before the day the article of food arrived at the border crossing in the port of entry. Under the interim final rule, prior notice must be submitted to FDA and confirmed for FDA review no less than 2 hours before arrival by land via road, no less than 4 hours before arrival by air and land via rail, and no less than 8 hours before arrival by water. If the article of food is arriving by international mail, the prior notice must be submitted before the food has been sent to the United States and the parcel must be accompanied by confirmation of FDA receipt of prior notice. With the exception of prior notice for international mail, prior notice may not be submitted more than 5 calendar days before the anticipated date of arrival at the anticipated port of entry. When an article of food that is carried by or otherwise accompanies an individual is subject to prior notice, the prior notice must be submitted within the timeframe established for the mode of transportation, and the food must be accompanied by a copy of the FDA confirmation including the PN Confirmation Number. Because we

reduced the timeframes for submitting prior notice in the interim final rule to the minimum amount of time that we need to meet our statutory responsibility to receive, review, and respond to prior notice submissions, the interim final rule does not provide for amendments or updates to the prior notice. However, as discussed in more detail in section D, FDA and CBP will be actively exploring ways to reduce prior notice timeframes, while fulfilling the Bioterrorism Act mandates.

E. How Must You Submit Prior Notice? (Section 1.280 Proposed as § 1.287)

FDA proposed that prior notice, amendments, and updates be submitted electronically to FDA through the FDA PN System. The interim final rule provides that prior notice must be submitted electronically, in English (except an individual's name, the name of a company, or the name of a street), through either CBP's ABI/ACS or the FDA PN System Interface. All information must be submitted using the Latin (Roman) alphabet. The interim final rule eliminates submission of duplicative information to FDA by those who can file import entry information through ABI/ACS. FDA and CBP are upgrading and interfacing their respective electronic systems so that information required for prior notice can be submitted through ABI/ACS. Information required by the interim final rule also can be submitted through the FDA PN System Interface. The interim final rule also provides that if a customs broker's of self-filer's system is not working or if ABI/ACS is not working, prior notice must be submitted through the FDA PN System Interface. If the FDA PN System Interface or OASIS is not operating, prior notice information must be submitted by e-mail, or by fax to the FDA, but not in person.

F. What Information Must Be in a Prior Notice? (Section 1.281 Proposed as § 1.288)

The interim final rule requires the following information to be submitted in the prior notice:

- Submitter (name of individual, individual's telephone, fax, e-mail, name/address of submitting firm);
- Transmitter, if different than submitter (name of individual, individual's telephone, fax, e-mail, name/address of transmitting firm);
- Entry type;
- CBP entry identifier, such as the CBP entry number or in-bond number;
- The identity of the article of food as follows: The complete FDA product code; the common or usual name or market name; the estimated quantity described from largest container to the smallest package size; and the lot or code numbers or other identifier of the food if required by the FD&C Act or FDA regulations;
- Manufacturer, for food no longer in its natural state (name, address, registration number, except that the requirement to provide registration number does not apply to an article of food that is imported for transshipment or other export;
- Grower, if known, for an article of food that is in its natural state (name and growing location);
- Consolidator may voluntarily be provided by the submitter, at the submitter's option, if the grower is not known (name and address);
- FDA Country of Production;
- Shipper (name, address, registration number; except that the requirement to provide registration number does not apply to an article of food that is imported for transshipment or other export;
- The country from which the article is shipped;
- Anticipated arrival information (port of arrival and crossing location within that port, date, and time) or, if the food is imported by international mail, the anticipated date of mailing;
- The name and address of the importer, owner, and ultimate consignee, unless the shipment is imported or offered for import for transshipment through the United States under a T&E entry, or, if the food is imported by international mail, the U.S. recipient (name and address);
- Mode of transportation;
- Carrier (SCAC/Standard Carrier Abbreviated Code or IATA/International Air Transportation Association code or, if codes are not applicable, the name and country of the carrier) (except for food imported by international mail);
- Planned shipment information as applicable (except for food imported by international mail), including 6-digit HTS code; and
- If the article of food is under hold for failure to submit prior notice or submit an adequate prior notice, the location where it is being held, the date the article has arrived or will arrive at the location, and the name of a contact individual at the location.

FDA eliminated from the interim final rule telephone and fax numbers and e-mail addresses for most firms, entry line numbers, trade or brand name, and consumption entry information (port of entry/anticipated date of entry for Customs purposes). FDA revised information requirements regarding the quantity, lot/code identifier, manufacturer, grower, and carrier in the interim final rule. FDA added mode of transportation and planned shipment information to the interim final rule. In the interim final rule, registration numbers are required only for manufacturer and shipper, if the shipper is a facility that is required to be registered under section 415 of the FD&C Act (21 U.S.C. 350d) and 21 CFR part 1, subpart H, for that article of food. For clarity, the interim final rule segregates the information required for food arriving by international mail (§ 1.281(b)) and also segregates the information required for food refused under section 801(m) of the FD&C Act (§ 1.281(c)).

Table 1A, which appears later in this preamble, describes the information required in prior notice.

G. "What Must You Do If Information Changes After You Have Received Confirmation of a Prior Notice From FDA?" (Section 1.282 Proposed as §§ 1.289 to 1.294)

This provision has been revised in the interim final rule. The proposed rule allowed one product identity amendment for certain product identity information that was not known at the time of submission and for arrival updates. Product identity amendments could be submitted up to 2 hours before arrival at the border. Arrival updates were required if the port of entry changed or if the time of arrival was expected to be more than 3 hours later or 1 hour earlier than the anticipated time of arrival.

The interim final rule does not provide for product identity amendments or arrival updates. Because we reduced the timeframes for submitting prior notice in the interim final rule to the least amount of time that we need to meet our statutory responsibility to receive, review, and respond to prior notice submissions, the interim final rule does not provide for amendments or updates. The interim final rule requires that if required information (except estimated quantity, anticipated arrival information including the anticipated date of mailing, and planned shipment information) changes after FDA has confirmed prior notice for review, the prior notice should be cancelled and a prior notice with the correct information must be submitted.

H. "What Happens to Food That Is Imported or Offered for Import Without Adequate Prior Notice?" (Section 1.283 Proposed as § 1.278)

FDA revised the proposed rule to provide for more specificity, to clarify

the status of refused food, and to provide a mechanism for FDA review after refusal. In the interim final rule, FDA identifies the consequences and procedures for the following situations:

1. Inadequate Prior Notice (No, Inaccurate, or Untimely Prior Notice)

Unless immediately exported with CBP concurrence, an article of food that is refused for inadequate prior notice shall be held in accordance with § 1.283.

2. Status and Movement of Refused Food

- A refused food is considered general order merchandise under section 490(a) of the Tariff Act of 1930, as amended (19 U.S.C. 1490(a)).
- The refused food must be moved under an appropriate custodial bond. FDA must be notified of the location where the food has been or will be moved within 24 hours of refusal. If the food is held, it must be taken directly to the designated location within 48 hours, shall not be entered, and shall not be delivered to any importer, owner, or ultimate consignee.

3. Segregation of Refused Foods

If a refused food is part of a shipment that contains other articles, the refused food may be segregated from the rest of the shipment within the port of arrival or at the hold location if different.

4. Costs

Neither FDA nor CBP are liable for transportation, storage, or other expenses resulting from refusal.

5. Export After Refusal

A refused food may be exported with CBP concurrence and supervision (unless CBP or FDA has administratively detained or seized the article under other authority).

6. No Post-Refusal Submission or Request for Review

If no prior notice submission or request for FDA review is submitted in a timely fashion after a food is refused, the food will be dealt with as set forth in CBP regulations relating to general order merchandise. It may only be sold for export or destroyed as agreed to by CBP and FDA.

7. Food Carried by or Otherwise Accompanying an Individual

For food that is not for personal use, if the article of food is refused because prior notice is inadequate or the individual cannot provide FDA or CBP with a copy of the PN confirmation, the article may be held at the port or exported. If the individual cannot make arrangements for holding or export, the food may be destroyed.

8. Post-Refusal Prior Notice Submissions

If an article of food is refused for no or inaccurate prior notice, the prior notice must be submitted or corrected and resubmitted to FDA and confirmed by FDA for review.

9. FDA Review After Refusal

After refusal, only the submitter, importer, owner, or ultimate consignee may submit a written request asking FDA to review whether the article is subject to the requirements of this subpart under § 1.276(b)(5) and § 1.277, or whether the prior notice submission is accurate. The interim final rule also sets out procedures and timeframes for the review process.

10. International Mail

In the case of food arriving by international mail, if prior notice is inadequate or if the PN Confirmation Number is not affixed, the article will be held by CBP for 72 hours for FDA inspection and disposition. If refused and there is a return address, the parcel may be returned to sender. If there is no return address or the food in the shipment appears to present a hazard, FDA may dispose of or destroy the parcel at its expense. If FDA does not respond within 72 hours of the CBP hold, CBP may return the parcel back to the sender or, if there is no return address, destroy the parcel, at FDA expense.

11. Prohibitions on Delivery and Transfer

A refused article of food may not be delivered outside of the port where the article is held and may not be delivered to the importer, owner, or ultimate consignee or transferred by any person from the port or secure facility until FDA has examined the prior notice, determined the adequacy of the prior notice, and notified CBP and the transmitter that the article is no longer refused. After this notification by FDA to CBP and transmitter, entry may be made in accordance with law and regulation.

12. Relationship to Other Admissibility Provisions

A determination that an article of food is no longer subject to refusal under section 801(m)(1) of the FD&C Act is different than, and may come before, determinations of admissibility under other provisions of the FD&C Act or other U.S. laws. A determination that an article of food is no longer subject to refusal under section 801(m)(1) of the FD&C Act does not mean that it will be granted admission under other provisions of the FD&C Act or other U.S. laws.

I. What Are the Other Consequences of Failing to Submit Adequate Prior Notice or Otherwise Failing to Comply With This Subpart? (Section 1.284 Proposed as § 1.278)

The interim final rule provides that failure of a person who imports or offers to import an article of food to submit prior notice is a prohibited act under section 301(ee) of the FD&C Act (21 U.S.C. 331(ee)) and sets out the civil, criminal, and debarment actions that the United States may bring against persons who are responsible for the commission of a prohibited act.

J. What Happens to Food That Is Imported or Offered for Import From Unregistered Facilities That Are Required to Register Under 21 CFR Part 1, Subpart H? (Section 1.285)

The interim final rule also sets out the consequences concerning what happens at the border to food from facilities that are not registered as required under section 415 of the FD&C Act and 21 CFR part 1, subpart H. These are similar to provisions in the interim final rule for dealing with food that is refused for inadequate prior notice.

Table 1A of this document shows the information required by sections 1.281(a), (b), and (c). For clarity, the table also identifies under what circumstances certain information is not required, *e.g.*, registration numbers when the article of food is imported or offered for import for transshipment, storage and export, or further manipulation and export.

BILLING CODE 4160–01–P

Table 1A.--Prior Notice Information Required by Category

Information	Transshipment, Storage and Export, Manipulation and Export	Carried by or Accompanies an Individual	Food Not in Natural State	Food in Natural State	Mail	After Section 801(m) Refusal
§1.281 paragraph(s)	(a) and (c)	(a) and (c)	(a), (b), and (c)	(a), (b), and (c)	(b)	(c)
Submitter	Y	Y	Y	Y	Y	Y
Transmitter	Y	Y	Y	Y	Y	Y
Entry Type	Y	Y	Y	Y	Y	Y
Entry Identifier	Y	Y	Y	Y	Y	Y
FDA Product Code	Y	Y	Y	Y	Y	Y
Common, usual, or market name	Y	Y	Y	Y	Y	Y
Estimated Quantity	Y	Y	Y	Y	Y	Y[2]
Lot/Code #	Y	Y	Y	N	Y	Y
Manufacturer	Y	Y	Y	N	Y/N	Y
Manufacturer Registration #[1]	N	Y	Y/N	N	Y/N	Y
Grower, if known	Y	Y	N	Y	Y	Y
Cty of Production	Y	Y	Y	Y	Y	Y
Shipper	Y	Y	Y	Y	Y	Y
Shipper Registration #[1]	N	Y	Y	Y	Y	Y
Country Shipped	Y	Y	Y	Y	Y	Y
Port of Arrival	Y	Y	Y	Y	N	Y[2]
Date of Arrival	Y	Y	Y	Y	N	N
Time of Arrival	Y	Y	Y	Y	N	N
Date of Shipment	N	N	N	N	Y	N
Importer	N	Y	Y	Y	N	Y
Owner	N	Y	Y	Y	N	Y
Ultimate Consignee	N	Y	Y	Y	N	Y
U.S. Recipient	N	N	N	N	Y	Y
Mode of Transport	Y	N	Y	Y	N	Y
Carrier	Y	Y	Y	Y	N	Y
Airbill or Bill(s) of Lading	Y	N	Y	Y	N	Y[2]
Vessel/Voyage	Y	Y	Y	Y	N	Y[2]
Flight #	Y	Y	Y	Y	N	Y[2]
Trip #	Y	Y	Y	Y	N	Y[2]
Container #	Y	N	Y	Y	N	Y[2]
Car #	Y	N	Y	Y	N	Y[2]
License Plate #	Y	Y	Y	Y	N	Y[2]
HTS code	Y	Y	Y	Y	N	Y
Hold Location	N	N	N	N	N	Y

[1] Registration numbers are required only if the firm is required to register for a facility associated with the article of food under section 415 of the FD&C Act, 21 U.S.C. 350d and 21 CFR part 1, subpart H; if registration number is provided, city and country can be provided instead of the full address.

[2] After arrival, therefore, no longer anticipated or planned.

BILLING CODE 4160–01–C

III. Comments on the Proposed Rule

FDA received approximately 470 timely responses containing one or more comments in response to the proposed rule. To make it easier to identify comments and responses to the comments, the word "Comments" will appear before the description of the comment, and the word "Response" will appear before our response. A summary follows which includes a description of the appropriate section in the interim final rule.

A. General Comments and Outreach

(Comments) Some comments suggest revision of section 307 of the Bioterrorism Act. Other comments recommend that FDA repropose the rule or not implement the rule.

(Response) Changes to the statute are beyond the scope of this rulemaking. Postponing implementation of or not implementing the rule is not viable under section 307(c) of the Bioterrorism Act, which not only directs the FDA to "promulgate proposed and final regulations for the requirement of

providing notice in accordance with section 801(m)'' by December 12, 2003, but also provides that an 8 hour prior notice requirement takes effect on this date even if FDA has not promulgated regulations that are in effect by this deadline. However, we are publishing this rule as an interim final rule and are, accordingly, soliciting comment on its provisions.

(Comments) Most comments generally support the protections of the food supply provided under the Bioterrorism Act. Although comments recommend that the final rule be amended to reflect more accurately industry practices, other comments suggest the regulation should be strengthened to ensure that FDA has all of the information required to identify foods that may pose a health or security threat. Some comments argue that FDA already has access to information currently submitted to CBP to allow for identification and quick interdiction of foods that may pose a health or security threat. Other comments question how the final rule would enhance FDA's ability to improve food safety and whether the benefits outweigh the costs.

(Response) Through section 307 of the Bioterrorism Act, Congress amended the FD&C Act to require the submission to FDA of a notice providing information regarding food before its importation into the United States. Congress also required FDA to issue implementing regulations to be effective not later than December 12, 2003. Thus, a postponement of the rule is not an option. Although FDA is aware that the prior notice regulation will affect industry, Congress determined the need for prior notice by passing the Bioterrorism Act. Prior notice of imported food will give FDA better information about the food earlier, enabling FDA to review and respond to the information before the arrival of the food at the border. Prior notice also will give FDA information with which it will be able to better focus its inspection resources. Section V of this preamble, Analysis of Economic Impacts, discusses the benefits of this interim final rule in detail. To address many of the concerns raised by the comments, FDA has made significant modifications in the interim final rule. However, we are publishing this rule as an interim final rule and are, accordingly, soliciting comment on its provisions.

(Comments) Some comments ask that FDA provide clear guidance and training to industry and agency field personnel about the procedures for implementing the regulation.

(Response) FDA conducted extensive outreach on the proposed prior notice rule, including having relevant FDA staff attend 6 international meetings and over 100 domestic meetings to ensure that affected parties were aware of the Bioterrorism Act prior notice requirements. On January 29, 2003, FDA held a public meeting (via satellite downlink) to discuss both the registration and prior notice proposed rules (*see* 68 FR 1568, January 13, 2003) or *http://www.accessdata.fda.gov/scripts/oc/ohrms/advdisplay.cfm.* Nearly 1,000 participants in North and South America and the Caribbean viewed that live broadcast. The meeting was later re-broadcast to Europe, Asia, Africa, and the Pacific. FDA has also posted transcripts of the broadcast in English, French, and Spanish on the agency's Web site.

FDA plans similar outreach efforts directed to both domestic and international stakeholders after publication of the interim final rule implementing the registration and prior notice provisions of the Bioterrorism Act. Outreach will include many methods of communication:

- Dissemination of materials to guide affected domestic and international food facilities through the new processes established to implement the registration and prior notice requirements;
- Domestic outreach meetings to State regulators and industry;
- A satellite downlink video broadcast and a series of videoconferences to various regions of the world;
- Materials and events for the media;
- International outreach to food trading partners;
- Presentations by FDA officials and exhibits at professional and trade conferences and meetings to inform industry and state and local government representatives of the new requirements; and
- Cooperative arrangements with CBP and other Federal agencies to ensure that information on the interim final regulations and their requirements is disseminated to affected companies and individuals.

More specifics regarding each of these will be included in FDA's Web site at *http://www.fda.gov.* In addition, FDA also plans training in new or revised procedures for its field personnel, as well as CBP field personnel. FDA will also provide guidance on enforcement to its staff containing the agency's policies on injunctions, prosecution, and debarment related to failure to provide timely and accurate prior notice, as well as the agency's policies regarding refusals under section 801(m)(1) of the FD&C Act and holds under section 801(l). As described in greater detail later, FDA intends to include a transition period in this guidance, during which it will emphasize education to achieve compliance. Guidance documents are available to the public, and FDA will shortly publish a notice of availability in the **Federal Register**.

FDA will notify the World Trade Organization (WTO) of this interim final rule. Shortly after publication of this interim final rule, FDA will begin disseminating at U.S. ports flyers and posters summarizing the new requirements and informing representatives of affected entities how to provide prior notice to FDA. Online assistance and a help desk will be available when the interim final rule becomes effective.

B. Foreign Trade Issues

(Comments) Some comments questioned the consistency of the proposed regulation with U.S. obligations under various WTO agreements, NAFTA, and other international agreements.

(Response) FDA is aware of the international trade obligations of the United States and has considered these obligations throughout the rulemaking process for this regulation and the interim final regulation is consistent with these international obligations.

(Comments) Some comments asserted that the proposed regulation is burdensome, confusing, costly, disproportionate, discriminatory, and will have a negative impact on foreign trade.

(Response) In drafting the proposed rule, FDA considered how best to structure the proposed rule consistent with the statutory mandates of the Bioterrorism Act and, at the same time, to reduce the costs associated with compliance. As discussed in more detail in the following paragraphs, FDA has carefully considered comments received regarding the burden imposed by the proposed rule, including its effects on international trade. Furthermore, based on the comments received on the proposed requirements, FDA has made a number of significant changes that minimize the impact of prior notice requirements on the food industry. These changes include removing restrictions on who can submit prior notice; allowing submission to be made either through ABI/ACS (the existing mechanism for filing entry information with CBP) or the FDA PN System Interface (the FDA PN Web system described in the proposed rule); reducing the timeframes for submission of prior notice and tying them to mode

of transport; and streamlining the information requirements.

C. ''What Definitions Apply to This Subpart?'' (Section 1.276 Proposed as § 1.277)

1. The Act (§ 1.276(a))

The proposed rule defined ''the act'' as the Federal Food, Drug, and Cosmetic Act. The proposed rule also applies the definitions of terms in section 201 of the act (21 U.S.C. 321) to such terms as used in the proposed rule.

(Comments) FDA did not receive comments on the definition of ''the act.''

(Response) We did not change the definition in the interim final rule. We have clarified that the definitions in the FD&C Act do not apply if a term is defined differently in the interim final rule.

(Interim final rule) Section 1.276(a) of the interim final rule defines ''the act'' as the Federal Food, Drug, and Cosmetic Act. Section 1.276(b) provides the definitions in the FD&C Act apply unless a term is defined differently in the interim final rule.

2. Calendar Day (§ 1.276(b)(1))

The proposed rule defined ''calendar day'' as ''every day shown on the calendar.''

(Comments) FDA did not receive comments on the definition of ''calendar day.''

(Response) We did not change the definition in the interim final rule.

(Interim final rule) ''Calendar day'' is defined in § 1.276(b)(1) of the interim final rule as ''every day shown on the calendar.''

3. Country From Which the Article Originates (§ 1.276(b)(2))

Section 801(m)(1) of the FD&C Act requires that ''the country from which the article originates'' be identified in a prior notice. The proposed rule used the term ''originating country'' and defined it as ''the country from which the article of food originates.''

(Comments) Comments were received on the proposed definition of ''originating country.'' These comments are addressed under ''FDA Country of Production,'' which is the term that FDA has chosen in the interim final rule to replace ''originating country.''

(Response) The term ''the country from which the article originates'' has been added to the interim final rule to refer back to the statutory language.

(Interim final rule) ''Country from which the article originates'' is defined as ''FDA Country of Production.''

4. Country From Which the Article Is Shipped (§ 1.276(b)(3))

The proposed rule defined ''country from which the article of food was shipped'' as ''the country in which the article of food was loaded onto the conveyance that brings it to the United States.'' A conveyance is the means of transportation, *e.g.*, ship, truck, car, van, plane, railcar, *etc.,* not the shipping container that can be moved from a ship to a truck to a train. FDA requested comment on whether the phrase ''country from which the article of food was shipped'' should include the countries of intermediate destination.

(Comments) Several comments support identifying countries of intermediate destination, noting that it would be desirable to have this information to support product tracing. One states that even if a food product were merely shipped through another country without further manufacturing/processing, the potential for tampering would still exist. This comment is concerned that, without information on every intermediate country, FDA would lack the ability to trace food for potential contamination back through the distribution chain. Another comment supports providing the countries of intermediate destination. It states that, except in the case of sealed containers, the manufacturer cannot control manipulation that occurs in countries of intermediate destination.

Several comments state that the information required in a prior notice should not include countries of intermediate destination. Other comments note that: An imported article may pass through a number of ports or stops in a variety of countries and never be unloaded; a U.S. importer in most cases has no control of which ports or stops a carrier may make; and exporters cannot guarantee which ports the ship will enter or pass through on its way to a U.S. port. Another comment states the information would not be necessary for sealed containers because alteration or absence of a seal alerts the owner to tampering, but it may be necessary for bulk or unpackaged products. Most of the comments that object conclude that submission of additional countries of intermediate destination would be unreasonable and burdensome and would not improve the safety and security of the food supply.

(Response) Section 801(m)(l) of the FD&C Act uses the singular ''country'' when it directs submission of the identity of the country from which the article is shipped, not the plural ''countries.'' Thus, FDA has concluded that the text of the statute dictates that the definition be singular. The interim final rule thus retains the proposed definition of the term ''country from which the article was shipped.''

(Comments) One comment states that the proposed definition of ''country from which the article of food was shipped'' is clear and suggests that it be maintained. Several commenters suggest that ''country from which the article of food was shipped'' should be defined as the country from which the goods were ''exported'' to the United States as that phrase is used in the CBP regulations defining ''country of export.''

Other comments suggest that FDA's definition failed to take into account the following considerations: That ocean and air carriers routinely use ''feeder'' vessels/aircraft to move cargo from the country of origin to a ''gateway'' for transfer to a larger vessel or aircraft that will transport the cargo to its final destination; and that ocean vessels frequently discharge containers destined for the United States in Canada where they are transferred to a motor carrier for transport to the United States. The comments conclude that the proposal, if implemented, would confuse importers and require them to attempt to obtain the cargo routing from master carriers. They suggest that FDA require instead the reporting of the last country in which a product was stored if that is different from the country in which it was produced (the country of production).

(Response) Section 801(m)(1) of the FD&C Act requires that prior notice submissions identify ''the country from which the article is shipped.'' ''Country of export'' is not a term formally defined in CBP's regulations.

We acknowledge that food may pass through more than one country before it reaches the United States. However, we do not believe that this practice changes the definition dictated by the statutory language. Several examples may be helpful. In one scenario, a shipper in country A arranges for a food manufactured in country B to be transported to the United States via country C. The food arrives in country C on an ocean vessel and is transferred to a truck that brings it to the U.S. port of arrival. In this first scenario, the country from which the article is shipped is country C.

In a second scenario, a shipper in country A arranges for a food manufactured in country B to be transported to the United States by a ship that is loaded in country B but stops in country C and then continues to the United States where the food is discharged. In this second scenario, the country from which the article is

shipped is country B. In a third scenario, if the food was transferred to a different vessel in country C, the country from which the article is shipped is country C.

(Interim final rule) Section 1.276(b)(3) of the interim final rule defines ''country from which the article is shipped'' as ''the country in which the article of food is loaded onto the conveyance that brings it to the United States.'' We changed the term from ''country from which the article was shipped'' to ''country from which the article is shipped'' to accurately reflect the language of the statute.

5. FDA Country of Production and Originating Country (§ 1.276(b)(4))

The proposed rule defined ''originating country'' as ''the country from which the article of food originates,'' which means the country where the article of food was grown and harvested, or if processed, where the article of food was produced.

(Comments) Many comments regarding the definition of ''originating country'' suggest that FDA use the ''country of origin'' definition used by CBP, or the standard rules of origin used by CBP, USDA, and associations such as the WTO.

(Response) Section 801(m)(1) of the FD&C Act requires prior notice submissions to FDA identify ''the country from which the article originates.''

We have not changed the definition of ''originating country'' to align it with ''country of origin'' as that term is defined by CBP. CBP defines ''country of origin'' at 19 CFR 134.1(b) as follows:

> the country of manufacture, production, or growth of any article of foreign origin entering the United States. Further work or material added to an article in another country must effect a substantial transformation in order to render such other country the ''country of origin'' within the meaning of this part; however, for a good of a NAFTA country, the NAFTA Marking Rules will determine country of origin.

In rulings, CBP has further defined ''country of origin'' and substantial transformation to identify the country of growth of the main ingredient in a processed food rather than the country of production of ''the *article [of food]*'' (emphasis added) in the form it is being imported into the United States. For example, a CBP ruling identified the country of origin as the United States where beans were rehydrated and canned in the Dominican Republic, but grown and dried in the United States (Ref. 1). For purposes of the prior notice provisions of the FD&C Act, the ''article of food'' is canned beans, not dried beans. From a food safety standpoint, FDA is most interested in knowing where the article of food was processed and canned. We believe that it best serves the language and the purposes of section 801(m)(l) of the FD&C Act to define the term to focus on the country of production of the specific article of food that is being shipped to the United States. To avoid confusion between FDA's prior notice requirements and CBP requirements, the interim final rule uses the term ''FDA Country of Production'' instead of the term ''originating country'' or ''country from which the article originates.'' ''FDA Country of Production'' is already familiar to customs brokers and self-filers using ABI/ACS interface with OASIS.

(Comments) One comment suggests that ''EU'' (European Union) be acceptable for use as an originating country.

(Response) FDA disagrees. Section 801(m) of the FD&C Act requires identification of ''the *country* from which the article originates'' (emphasis added). Accordingly, for purposes of this provision, each sovereign country must be identified when declared as part of the prior notice submission.

(Comments) Several comments suggest that the definition of ''country of origin'' for fish be the country in which the vessel is flagged or in which the fish was last processed. Another comment asks FDA to use the definition of ''country of origin'' being used by USDA's Agricultural Marketing Service for fish and seafood.

(Response) We generally agree. The proposed rule relied in part on USDA's proposed definition as set out in USDA guidance published in the **Federal Register** on October 11, 2002, and is based on the Farm Security and Rural Investment Act of 2002 (commonly known as the 2002 Farm Bill), as amended. As set out in § 1.276(b)(4) of the interim final rule, if an article of food is wild fish that is still in its natural state and was caught or harvested outside the waters of the United States by a vessel that is not registered in the United States, the FDA Country of Production is the country in which the vessel is registered. If the article of food is made from wild fish aboard a vessel, the FDA Country of Production is the country in which the vessel is registered.

(Comments) Several comments express concern that the proposed definition, ''[o]riginating country means the country from which the article of food originates,'' does not take into consideration the producer, processor, vessel or common carrier feeder and consolidation practices in which components of the shipment may be composites or commingled from more than one country. One comment asks that FDA describe when the country of canning would be the originating country, and when it would not. One comment suggests that decaffeinating or blending coffee be considered processing and that decaffeinated or blended coffee be considered as processed food for the purposes of prior notice.

(Response) Some of these comments appeared to confuse the proposed definition of ''country from which the article of food was shipped'' with the proposed definition of ''originating country,'' another reason why we decided to use the term ''FDA Country of Production.'' As explained above in the discussion of ''the country from which the article is shipped,'' the two countries will sometimes be different. When determining which country is the FDA Country of Production, the focus should be on the production of the specific article of food. For example, if the article of food is raw, whole, unpeeled carrots, the FDA Country of Production is the country where the carrots were grown and harvested. If the article of food is raw peeled and chopped carrots or canned carrots, the FDA Country of Production is the country where the carrots were peeled and chopped or canned. As a general matter, for canned foods, the FDA Country of Production should be the country where food was canned. Similarly, we consider decaffeinated coffee to be no longer in its natural state and the FDA Country of Production would be the country in which the coffee was decaffeinated.

(Interim final rule) Section 1.276(b)(4) of the interim final rule defines the ''FDA Country of Production'' for an article of food that is in its natural state, as country where the article of food was grown, including harvested or collected and readied for shipment to the United States. If an article of food is wild fish, including seafood, that was caught or harvested outside the waters of the United States by a vessel that is not registered in the United States, the FDA Country of Production is the country in which the vessel is registered. For an article of food that is no longer in its natural state, the FDA country of production is defined as the country where the article was made; except that, if an article of food is made from wild fish, including seafood, aboard a vessel, the FDA Country of Production is the country in which the vessel is registered. If an article of food that is no longer in its natural state was made in

a Territory, the FDA Country of Production is the United States.

6. Food (§ 1.276(b)(5))

The proposed rule defined ''food'' as having the meaning given in section 201(f) of the FD&C Act. The proposed rule provided examples of food including:

fruits, vegetables, fish, dairy products, eggs, raw agricultural commodities for use as food or components of food, animal feed, including pet food, food and feed ingredients and additives, including substances that migrate into food from food packaging and other articles that contact food, dietary supplements and dietary ingredients; infant formula, beverages, including alcoholic beverages and bottled water, live food animals (such as hogs and elk), bakery goods, snack foods, candy, and canned foods.

a. *Food packaging and other food contact substances.*

(Comments) We received several comments on the subject of food contact substances, including packaging. The comments ask that FDA clarify the definition of ''food'' because the proposed rule included as examples of food not only those items traditionally understood as food, but also items that come into contact with and may migrate into food during processing or packaging. In particular, the comments ask that food packaging and components of food packaging, other food contact articles (such as food processing equipment and components of such equipment, glassware, dishware, cutlery, kitchen appliances), and so-called indirect additives (including those applied to food contact surfaces) be excluded from the final rule's definition of ''food.''

In support, the comments contend the legislative history of the prior notice provisions establish that Congress did not intend to apply prior notice requirements to these substances even though they can be food within the meaning of section 201(f) of the FD&C Act. In addition, some point to language in section 415 of the FD&C Act (21 U.S.C. 350d) relating to registration and language in section 414(b) of the FD&C Act relating to recordkeeping (21 U.S.C. 350c). Finally, some comments argued that an overly broad definition of ''food'' would dilute the government's resources, thereby hampering the government's opportunity to achieve the protective goals of the Bioterrorism Act.

(Response) We expressly included food packaging and other food contact materials in the proposed definition, with the result that prior notice would have been required for food packaging and other food contact materials and their components (see 68 FR 5428 at 5430). The breadth of the proposed definition of ''food'' was based on both the statutory definition in section 201(f)(3) of the FD&C Act, which defines articles used as components of food as ''food,'' as well as the case law interpreting the definition, including *Natick Paperboard* v. *Weinberger,* 525 F.2d 1103 (1st Cir. 1975) (paperboard containing PCBs intended for food use is adulterated food; *U.S.* v. *Articles of food * * * 688 Cases * * * of Pottery (Cathy Rose),* 370 F. Supp. 371 (E.D. Mi. 1974) (ceramic pottery that leaches lead is adulterated food).

The comments on food contact substances raise the question of what Congress intended ''food'' to mean for purposes of prior notice. In construing the prior notice provision of the Bioterrorism Act, FDA is confronted with two questions. First, has Congress directly spoken to the precise question presented? (''*Chevron* step one'') *Chevron, U.S.A., Inc.* v. *NRDC, Inc.,* 467 U.S. 837, 842 (1984). To find no ambiguity, Congress must have clearly manifested its intention with respect to the particular issue (*Young* v. *Community Nutrition Institute,* 476 U.S. 974, 980 (1986)). If Congress has spoken directly and plainly, the agency must implement Congress's unambiguously expressed intent (*Chevron,* 467 U.S. at 842–843). If, however, the Bioterrorism Act is silent or ambiguous as to the meaning of ''food,'' FDA may define ''food'' in a reasonable fashion (''*Chevron* step two''); *Chevron,* 467 U.S. at 842–843; *FDA* v. *Brown & Williamson Tobacco Corp.,* 529 U.S. 120, 132 (2000)).

The agency has determined that, in enacting section 801(m) of the FD&C Act, Congress did not speak directly and precisely to the meaning of ''food.'' As noted, the FD&C Act has a definition of ''food'' at section 201(f). It may be a reasonable assumption that, when the term ''food'' is used in the FD&C Act, section 201(f) applies. However, although there may be ''a natural presumption that identical words used in different parts of the same act are intended to have the same meaning [citation omitted], * * * the presumption is not rigid * * *.'' (*Atlantic Cleaners & Dyers, Inc.* v. *U.S.,* 286 U.S. 427, 433 (1932); (*accord: U.S.* v. *Cleveland Indians Baseball Co.,* 532 U.S. 200, 213 (2000)). Thus, the same word may be given different meanings, even in the same statute, if Congress intended different interpretations or if such different interpretations are reasonable (at step 2) (*Atlantic Cleaners & Dryers, Inc., supra*).

Even before the Bioterrorism Act amendments, the term ''food'' was not defined identically throughout the FD&C Act. For example, in construing the parenthetical ''(other than food)'' in section 201(g)(1)(C) of the FD&C Act, the Seventh Circuit Court noted that Congress meant to exclude only ''articles used by people in the ordinary way that most people use food—primarily for taste, aroma, or nutritive value'' and not all substances defined as food by section 201(f) (*Nutrilab, Inc.* v. *Schweiker,* 713 F.2d 335, 338 (7th Cir. 1983)). Similarly, section 409(h)(6) of the FD&C Act defines a ''food contact substance'' as ''any substance intended for use as a component of materials used in manufacturing, packing, packaging, transporting, or holding *food* if such use is not intended to have any technical effect in *such food*'' (emphasis added). This definition makes sense only if ''food'' in this context excludes materials that contact food because components of food contact materials are plainly intended to have a technical effect in such materials.[2]

Thus, in this larger statutory context, FDA has evaluated section 801(m) of the FD&C Act to determine whether the meaning of the word ''food'' is ambiguous. In conducting this *Chevron* step one analysis, all of the traditional tools of statutory interpretation are available to determine whether the language Congress used is ambiguous (*Pharmaceutical Research & Manufacturers of America* v. *Thompson,* 251 F. 3d 219, 224 (D.C. Cir. 2001)). Beginning with the language of the statute, in section 801(m) of the FD&C Act, ''food'' is used to describe which subset of FDA-regulated articles are subject to prior notice:

In the case of an article of *food* that is being imported or offered for import into the United States, the Secretary, after consultation with the Secretary of the Treasury, shall by regulation require, for the purpose of enabling such article to be inspected at ports of entry into the United States, the submission to the Secretary of a notice * * * (emphasis added).

The Bioterrorism Act is silent as to the meaning of ''food.'' Congress did not specify whether it intended the definition in section 201(f) of the FD&C Act to apply, one of the other

[2] FDA's long-standing interpretation of the FD&C Act's definition of color additive, section 201(t), is an additional example of where ''food'' is used more narrowly than as defined in section 201(f). A color additive is defined in section 201(t) of the FD&C Act as a substance that ''when applied to a food * * * is capable * * * of imparting color thereto * * *.'' The agency's food additive regulations distinguish between color additives and ''colorants,'' the latter being used to impart color to a food-contact material (21 CFR 178.3297(a); see also 21 CFR 70.3(f)). Thus, ''food'' as it appears in the statutory definition of color additive, necessarily excludes food contact materials.

possibilities noted above, or another meaning. Where, as here, the statutory language on its face does not clearly establish Congress's intent, it is appropriate to consider not only the particular statutory language at issue, but also the language and design of the statute as a whole (*Martini* v. *Federal Nat'l Mortgage Association,* 178 F. 3d 1336, 1345 (D.C. Cir. 1999), *citing K Mart Corp.* v. *Cartier, Inc.,* 486 U.S. 281 (1988)). Indeed, the analysis should not be confined to the specific provision in isolation, because the meaning or ambiguity of a term may be evident only when considered in a larger context (*FDA* v. *Brown & Williamson Tobacco Corp., supra* at 132 (2000)).

Consistent with this instruction, FDA has considered other parts of the Bioterrorism Act in assessing whether the meaning of ''food'' in section 801(m) of the FD&C Act ambiguous. In particular, FDA has considered the language of section 415 of the FD&C Act. The Bioterrorism Act's registration provision is one piece of several enacted by Congress to enhance the safety of the U.S. food supply. Registration is designed to work in concert with prior notice. This is reflected in the Bioterrorism Act's amendment of section 801 of the FD&C Act to provide that food from an unregistered foreign facility be held at the port when imported or offered for import (section 801(l) of the FD&C Act). The information provided by registration will allow FDA to cross-check prior notice submissions against registration data to confirm the identity of manufacturers and others who are required to register. Furthermore, the information provided by prior notice submissions can serve as a cross-check as to whether firms are registered as required and have been providing the necessary updates.

As explained in the preamble to the interim final registration rule published elsewhere in this issue of the **Federal Register**, FDA has concluded that the meaning of the term ''food'' in section 415 of the FD&C Act is ambiguous. First, the use, in section 415(a)(1) of the FD&C Act, of the phrase ''for consumption'' after the word ''food'' creates an ambiguity because it could be read to suggest that ''food'' within the context of the section 415 registration requirement only refers to food that is ordinarily thought of as ''consumed.'' By modifying the term ''food,'' Congress apparently intended to limit the term ''food'' to something less than the broad definition in section 201(f) of the FD&C Act. In addition, in section 415(b)(1) of the FD&C Act, when defining ''facility'' for purposes of section 415, Congress expressly exempted ''farms; restaurants; other retail food establishments; nonprofit food establishments in which food is prepared for or served directly to the consumer * * *.'' These exemptions do not make clear whether Congress intended them to cover only food that is ordinarily eaten at some point by consumers primarily for taste, aroma, or nutritive value or whether, for example, a retail food establishment could include retailers of food contact materials, such as retail cookware stores.

The legislative history of section 415 of the FD&C Act also supports the conclusion that Congress did not speak directly to the meaning of ''food'' in that Bioterrorism Act provision. Such history is appropriately consulted at *Chevron* step one (*Atherton* v. *FDIC,* 519 U.S. 213, 228–29 (1997)). In particular, the Conf. Rept. to H.R. 3448, which became the Bioterrorism Act, explains what Congress intended by ''retail food establishments,'' which is used to create an exemption from registration.

> The Managers intend that, for the purposes of this section, the term 'retail food establishments' includes establishments that store, prepare, package, serve, or otherwise provide articles of food directly to the retail consumer for human consumption, such as grocery stores, convenience stores, cafeterias, lunch rooms, food stands, saloons, taverns, bars, lounges, catering or vending facilities, or other similar establishments that provide food directly to a retail consumer.

(H. Conf. Rept. No. 481, 107th Cong., 2d Sess., 133 (2002)). Similarly, the Conf. Rept. notes that the term ''non-profit food establishments'' includes not-for-profit establishments in which food is prepared for, or served directly to the consumer, such as food banks, soup kitchens, homebound food delivery services, or other similar charitable organizations that provide food or meals for human consumption'' (*Id.* at 133–34). Notably, the examples provided by Congress for both types of exempt food establishments are not those that generally sell or distribute food contact materials. Accordingly, the legislative history of section 415 of the FD&C Act creates additional ambiguity as to the meaning of ''food.''

This ambiguity in the word ''food'' is further underscored by the legislative history of section 801(m) of the FD&C Act. For example, the Conf. Rept. states that the prior notice provision is to be construed not to apply to ''packaging materials if, at the time of importation, such materials will not be used for or in contact with food * * *'' (see H. Conf. Rept. No. 481, 107th Cong., 2d Sess., 136 (2002)). This statement implies that Congress was not relying on the definition of food in section 201(f) of the FD&C Act. For example, the statement could be read to mean that the term ''food'' does not include packaging or other materials that contact food.

Having concluded that the meaning of ''food'' in section 801(m) of the FD&C Act is ambiguous, FDA has considered how to define the term to achieve a ''permissible construction'' of the prior notice provision (*Chevron, USA, Inc.* v. *NRDC, Inc., supra* at 843). In conducting this *Chevron* step two analysis, the agency has considered the same information evaluated at step one of the analysis (*Bell Atlantic Telephone Co.* v. *FCC,* 131 F. 3d 1044, 1049 (D.C. Cir. 1997); *Chevron U.S.A., Inc.* v. *FERC,* 193 F. Supp. 2d 54, 68 (D.D.C. 2002)). FDA has determined that it is permissible, for purposes of the prior notice provision, to exclude food contact materials from the definition of ''food.''

Restricting ''food'' to substances other than food contact materials is consistent with the legislative history of the prior notice provision relating to food packaging and other food contact substances. In addition, it is consistent with the ''food for consumption'' language in section 415(a)(1) (FD&C Act) of the registration provision. That is, foods that are ''consumed'' are generally those eaten for their taste, aroma, or nutritive value. In addition, excluding food contact materials from ''food'' in this regulation is consistent with the exemptions in section 415(b)(1) of the FD&C Act, as well as the legislative history of section 415.

As discussed in the following paragraphs in responses to other comments, FDA has also interpreted ''food'' for purposes of section 801(m) of the FD&C Act to exclude pesticides as that term is defined under 7 U.S.C. 136(u). Accordingly, FDA has determined that a reasonable interpretation of ''food'' for purposes of section 801(m) of the FD&C Act is as follows and has revised § 1.276(b)(5) of this interim final rule to provide:

> Food has the meaning given in section 201(f) of the act, except for purposes of this subpart, it does not include food contact substances as defined in section 409(h)(6) of the act (21 U.S.C. 348(h)(6)); or pesticides as defined in 7 U.S.C. 136(u). Examples of food include fruits, vegetables, fish (including seafood), dairy products, eggs, raw agricultural commodities for use as food or as components of food, animal feed (including pet food), food and feed ingredients, food and feed additives, dietary supplements and dietary ingredients, infant formula, beverages (including alcoholic beverages and bottled water), live food animals, bakery goods, snack foods, candy, and canned foods.

Importantly, FDA still considers food packaging and other food contact substances to be ''food'' within the meaning of section 201(f) of the FD&C Act when they, or their components, migrate into other food. Therefore, these items are still ''food'' for purposes of the other provisions of section 801 of the FD&C Act (with the exception of section 801(l), which shares the same definition of food as section 801(m)). Accordingly, although not subject to the section 801(m) of the FD&C Act requirement of prior notice, food packaging materials and other food contact substances will remain, as they have been, subject to determinations of admissibility under section 801(a) of the FD&C Act.

b. *Food processing aids.* (Comments) One comment argues that food processing aids and ''indirect food additives'' should not be considered food for purposes of section 801(m) of the FD&C Act. According to the commenter, these substances resemble food contact substances, which Congress, as evidenced by the prior notice legislative history of food contact substances, did not expect FDA to subject to prior notice.

(Response) Whether a food processing aid or ''indirect additive'' is subject to prior notice depends upon whether such a substance is ''food'' under this rule. As noted, for purposes of the interim final rule, ''food'' excludes ''food contact substances'' as defined at section 409(h)(6) of the FD&C Act. Among other things, unlike food processing aids and ''indirect additives,'' ''food contact substances'' are not ''intended to have any technical effect in food,'' section 4091(h)(6) of the FD&C Act. In addition, ''food'' excludes pesticides as defined at 7 U.S.C. 136(u). Thus, if the substance is not a pesticide and is intended to have a technical effect in the food being processed, the substance is not exempt from the definition of ''food'' under § 1.276(b)(5) in the interim final rule. This is a reasonable result in that such processing aids are intentionally and directly added to ''traditional'' foods.

c. *Antimicrobial pesticides.* (Comments) One comment expresses concern about including antimicrobial pesticides within the scope of this regulation. The comment states that pesticides are imported pursuant to the Federal Insecticide, Fungicide, and Rodenticide Act (FIFRA), not the FD&C Act, and are subject to Environmental Protection Agency (EPA) approval before they are admitted to the United States. The comment asks that FDA clarify that this regulation is not applicable to antimicrobial pesticides with FDA and/or EPA approved food contact uses. The comment states that including antimicrobial pesticides within the scope of this regulation would impose unnecessary burdens on antimicrobial pesticide registrants, without enhancing the protection of the food supply.

(Response) As discussed previously, the meaning of ''food'' in section 801(m) of the FD&C Act is ambiguous. Therefore, FDA may define ''food'' in a reasonable manner. FDA believes that excluding pesticides from the definition of food is reasonable. Pesticides, including those used in or on food for human or animal use, are comprehensively regulated by the Federal Government. Under FIFRA, 7 U.S.C. 136 *et seq.*, all pesticides (both food and nonfood use) are registered with EPA. As part of the registration process, establishments in which pesticides are produced must register with EPA (40 CFR 167.3 and 167.20). As part of the importation process, prior notice of pesticide shipments must be provided to EPA (19 CFR 12.112).

Importantly, the Federal regulatory scheme for pesticides was substantially revised in 1996 by the Food Quality Protection Act (FQPA) (Pub. L. 104–170), and EPA's authority over pesticides was consolidated and expanded. As a result of FQPA, pesticides and their residues are subject to substantial and comprehensive regulation by EPA. Where another Federal agency has the types of specific and comprehensive authority described previously to regulate the safety of a substance, FDA believes that it is appropriate to interpret ''food'' in section 801(m) of the FD&C Act as not including that substance. Accordingly, FDA has revised the definition of ''food'' in § 1.276(b)(5) to exclude pesticides as defined by FIFRA.

d. *Chemicals* (Comments) One comment seeks clarification as to whether chemicals are considered ''food.'' The comment expects that chemicals intended for human consumption will likely be included in the requirements for prior notice.

(Response) We are not sure exactly what substances or products the comment refers to; ''chemicals'' is a very broad term. Unless excluded because they are food contact substances or pesticides, chemicals that are ''used for food or drink'' or are ''used for components of any such articles'' are ''food'' under section 201(f) of the FD&C Act and the definition in the interim final rule (§ 1.276(b)(5)). If the substance is used in some applications that make the substance ''food'' and some that do not, the principles applicable to further processing and multi-use substances, set out in the following paragraphs, apply.

e. *Live animals.* (Comments) Two comments address inclusion of live animals. One comment urges FDA to exempt live food animals from this regulation, as it will have far-reaching impacts on all Canadian farmers who export live food animals to the United States. The other comment asks for clarification as to how prior notice applies to live food animals imported for further processing, such as finishing.

(Response) As discussed previously, the meaning of ''food'' in section 801(m) of the FD&C Act is ambiguous. Therefore, FDA may define ''food'' in a reasonable manner. FDA believes that it is reasonable to interpret ''food'' in section 801(m) of the FD&C Act to include live animals. Such inclusion is consistent with the explicit reference to animals in the statutory standard, ''serious adverse health consequences or death to humans or animals'' in section 801(m)(2)(B)(ii) of the FD&C Act—the provision that relates to FDA review of prior notices submitted for food refused for lack of adequate prior notice. In addition, it is consistent with the legislative history of section 801(m) of the FD&C Act that refers only to the exclusion of food contact substances. Moreover, the products of live food animals are an integral part of the food consumed in the United States, and thus, it is logical to protect the raw materials (*i.e.*, the live animals) by including them under the Bioterrorism Act's safeguards. Finally, the inclusion of live animals in the definition of ''food'' is consistent with the reasonable interpretation of the registration provision, section 415 of the FD&C Act. Accordingly, the interim final rule's definition of ''food'' includes live food animals. Defining ''food'' to include live animals is also consistent with the case law interpreting the term ''food'' in the broader context of the FD&C Act. See *United States* v. *Tuente Livestock*, 888 F. Supp. 1416 (S.D. Ohio, 1995).

f. *Articles for further processing or capable of multiple uses.* (Comments) Some comments ask that FDA clarify that the definition of ''food'' does not include substances that are not edible, but may be further processed to be rendered edible, for example, crude vegetable oils, crude petroleum, and minerals such as phosphates which may be refined and processed into food ingredients such as glycerin and phosphoric acid. The comments state that where bulk commodities have potential food and nonfood uses, there should be an exemption from import notification where these commodities have not been sufficiently refined to be

directly used as food ingredients without further processing or refining.

Another comment notes that gelatin is used for food, pharmaceutical, and technical applications and seeks assistance with establishing a labeling protocol to distinguish between edible gelatin, pharmaceutical gelatin, and technical gelatin. Some comments state FDA should require prior notice only for food intended for consumption and ask FDA to specify the articles that would be considered ''food.'' The comments also state that some imports have both food and nonfood uses and that prior notice should only be required for imports that will be used as a food. In addition, one comment strongly urges FDA to remove indirect food contact colors (*i.e.*, material used to color food contact material) from the requirements of prior notice. The comment indicates that food contact colors are often prepared in bulk and then shipped to companies that can use these pigments in both food and nonfood applications. The process of manufacturing color pigments could be many steps removed from the process of actually using these products in food packaging. Therefore, the decision to use the product in food may not be made until after the pigment has entered commerce.

(Response) For purposes of the interim final rule, ''food'' has the definition in section 201(f) of the FD&C Act except that ''food contact substances'' as defined at section 409(h)(6) of the FD&C Act and ''pesticides'' as defined at 7 U.S.C. 136(u) are excluded from ''food.'' Under section 201(f) of the FD&C Act, ''food'' means ''articles used for food or drink'' (section 201(f)(1)) and articles ''used for components of any such article'' (section 201(f)(3)). The determination of whether a substance is ''food'' is not a question of intended use (*Nutrilab* v. *Schweiker*, 713 F.2d. 335, 337 (7th Cir. 1983); *U.S.* v. *52 Drums Maple Syrup*, 110 F.2d 914, 915 (2d Cir. 1940); *U.S.* v. *Technical Egg Products*, 171 F.Supp. 326, 328 (N.D. Ga. 1959)). Courts interpreting the ''food'' definition in the FD&C Act have held that articles at both ends of the food continuum are ''food'' for purposes of the FD&C Act (*U.S.* v. *O.F. Bayer & Co.*, 188 F.2d 555 (2d. Cir. 1951); *U.S.* v. *Tuente Livestock*, 888 F. Supp. 1416 (S.D. Ohio, 1995) (live animals for food use are ''food'' under the FD&C Act); *U.S.* v. *Technical Egg Products, supra*, 171 F.Supp. at 328 (rotten eggs are ''food'')). Thus, FDA believes that an item may be food even if the food is not yet in the form in which it will be used for food. FDA will consider a product as one that will be used for food if any of the persons involved in importing or offering the product for import (*e.g.*, submitter, transmitter, manufacturer, grower, shipper, importer, owner, or ultimate consignee) reasonably believes that the substance is reasonably expected to be directed to a food use.

If the substance can be used in some applications that make the substance ''food'' and some that do not, the same principles apply. With respect to gelatin and other substances that may exist in multiple grades, including food grade, FDA will consider an article one that will be used for food if any of the persons involved in importing or offering the product for import (*e.g.*, submitter, transmitter, manufacturer, grower, shipper, importer, owner, or ultimate consignee) reasonably believes that the substance is reasonably expected to be directed to a food use.

Finally, as set forth previously, the interim final rule excludes food contact substances from the definition of ''food.'' Thus, when substances to color food contact substances or their components are imported, they are not subject to prior notice. However, colors used in such substances are still subject to regulation as food under section 201(f) of the FD&C Act for purposes of other provisions of the FD&C Act.

(Interim final rule) In the interim final rule (§ 1.276(b)(5)), ''food'' has the meaning given in section 201(f) of the FD&C Act, except for purposes of this rule, it does not include ''food contact substances'' as defined in section 409(h)(6) of the act (21 U.S.C. 348(h)(6)) or ''pesticides'' as defined in 7 U.S.C. 136(u). Examples of food include fruits, vegetables, fish (including seafood), dairy products, eggs, raw agricultural commodities for use as food or as components of food, animal feed (including pet food), food and feed ingredients, food and feed additives, dietary supplements and dietary ingredients, infant formula, beverages (including alcoholic beverages and bottled water), live food animals, bakery goods, snack foods, candy, and canned foods.

7. Grower (§ 1.276(b)(6))

Although the statute and proposed rule used the term grower, the proposed rule did not define the term. However, FDA solicited comments on whether the term ''grower'' includes a harvester or collector of wild products, *e.g.*, some fish and botanicals.

(Comments) A comment states that although harvesters or collectors of wild botanicals do not grow botanicals and should be differentiated from growers for certain purposes, these can be included in the term ''grower'' consistent with the congressional intent in § 307 of the Bioterrorism Act to identify the direct source of the agricultural raw commodity.

(Response and interim final rule) FDA agrees. Accordingly, we have defined ''grower'' to mean a person who engages in growing and harvesting or collecting crops (including botanicals), raising animals (including fish, which includes seafood), or both.

8. International Mail (§ 1.276(b)(6))

Although the proposed rule applied to food imported or offered for import by mail, see, *e.g.*, 68 FR 5436, the proposed rule did not define ''international mail.''

(Comments) There were no comments received concerning any definition of ''international mail.''

(Response and interim final rule) The interim final rule imposes slightly different requirements relating to prior notice for food arriving by international mail. Thus, FDA determined that a definition of ''international mail'' would be helpful. The interim final rule defines ''international mail'' to mean ''foreign national mail services.'' It also expressly excludes express carriers, express consignment operators, or other private delivery services from this definition.

9. No Longer In Its Natural State (§ 1.276(b)(8))

Section 801(m)(1) of the FD&C Act requires that the identity of the manufacturer be submitted as part of a prior notice. However, the proposed rule did not define ''manufacturer'' or address what constituted the product of a manufacturer versus the product of a grower.

(Comments) Comments raised questions concerning when a manufacturer must be identified for an article of food.

(Response) These comments are discussed under the heading ''What Information Must be in a Prior Notice.'' However, as a result of the comments, we determined that a definition of when food would be ''no longer in its natural state'' would be helpful to clarify when the identity of a manufacturer versus the identity of a grower must be provided in a prior notice.

(Interim final rule) The interim final rule (§ 1.276(b)(8)), defines the term ''no longer in its natural state'' to mean that an article of food has been made from one or more ingredients or synthesized, prepared, treated, modified, or manipulated. Examples of activities that render food no longer in its natural state are cutting, peeling, trimming, washing, waxing, eviscerating, rendering, cooking, baking, freezing, cooling,

pasteurizing, homogenizing, mixing, formulating, bottling, milling, grinding, extracting juice, distilling, labeling, or packaging. However, crops that have been cleaned (*e.g.*, dusted, washed), trimmed, or cooled attendant to harvest or collection or treated against pests, waxed, or polished are still in their natural state for purposes of the prior notice interim final rule. Likewise, whole fish headed, eviscerated, or frozen attendant to harvest are still in their natural state for purposes of the prior notice interim final rule.

10. Port of Arrival (§ 1.276(b)(9)) and Port of Entry (§ 1.276(b)(10))

The proposed rule defined ''port of entry'' as ''the water, air, or land port at which the article of food is imported or offered for import into the United States, *i.e.*, the port where food first arrives in the United States.''

(Comments) Many comments suggest harmonizing with, or adopting, the CBP definition for ''port of entry.'' In the opinion of two comments, the CBP definition is consistent with congressional intent and the FDA departure from the CBP definition is unsupported. Many of these comments state the two definitions would cause confusion in the import community and could delay proper prior notice. Other comments suggest changing the FDA definition of ''port of entry'' to the ''port of arrival.'' Another comment suggests defining ''port of entry'' as the entering point of a country where the merchandise is checked by official authorities. Two comments state that defining ''port of entry'' as the port of arrival would change business practices by essentially stopping the use of CBP ''in-transit'' (*i.e.*, IT) entries under bond to inland ports.

(Response) Section 801(m)(2)(A) of the FD&C Act states that FDA's implementing regulations must require that the notice ''be provided by a specified period of time in advance of importation of the article involved * * *.'' The stated purpose of section 801(m)(1) is ''enabling [articles of food] to be inspected at ports of entry into the United States * * *.'' Moreover, the overall purpose of the Bioterrorism Act is ''[t]o improve the ability of the United States to prevent, prepare for, and respond to bioterrorism and other public health emergencies.'' (Pub. L. 107–188.) The ability to examine or, if necessary, hold a suspect article of food when it first arrives at a port of entry in the United States, rather than later at the port where CBP will process the entry, will most effectively serve this overall purpose. Thus, to ensure that there is clarity that prior notice must be provided in advance of arrival, we are defining the term ''port of arrival'' as the water, air, or land port at which the article of food is imported or offered for import into the United States, *i.e.*, the port where the article of food first arrives in the United States.

In addition, we are adopting the CBP definition of ''port of entry'' to allow flexibility when designating where refused merchandise will be held. The CBP ''Port of entry'' definition states:

The terms ''port'' and ''port of entry'' refer to any place designated by Executive order of the President, by order of the Secretary of the Treasury, or by Act of Congress, at which a Customs officer is authorized to accept entries of merchandise to collect duties, and to enforce the various provisions of the Customs and navigation laws. The terms ''port'' and ''port of entry'' incorporate the geographical area under the jurisdiction of a port director. (The Customs ports in the Virgin Islands, although under the jurisdiction of the Secretary of the Treasury, have their own Customs laws (48 U.S.C. 1406(i)). These ports, therefore, are outside the Customs territory of the United States and the ports thereof are not ''port of entry'' within the meaning of these regulations) (19 CFR 101.1).

This flexibility will ensure that food that has been refused may move to the port of destination where, for example the consumption or warehouse entry will be filed, unless directed by CBP or FDA. Generally, we do not intend to hold shipments at the border unless our assessment of the situation leads us to believe it is warranted, *e.g.*, the food may present a serious risk to public health or that the prior notice violation is egregious. We intend to implement prior notice, both in terms of determining what warrants a refusal in the first place, and in terms of determining which shipments may move to the port of destination, in a risk-based way.

(Comments) Other comments state rail transportation would be especially affected because inbound trains often are not required to stop at the U.S. border but proceed to inland terminals.

(Response) As explained later, rail shipments that have been refused admission per section 801(m)(1) of the FD&C Act are considered to have the status of general order merchandise. In many cases, it will be operationally difficult to stop an entire train because an article of food on it has been refused admission because of inadequate prior notice. Under CBP regulation, general order merchandise may be stored by the carrier or as the CBP port director may direct (see 19 CFR 123.10(f)). Moreover, in situations involving shipments by rail, FDA and CBP have the discretion to allow the movement of the cargo from the border crossing to the nearest point where it can be safely and securely held. We intend, whenever possible, to examine articles of food arriving by rail at the appropriate examination site closest to the border. However, if the shipment might pose an immediate danger to public health and safety, an article of food arriving by train may be held at the border pending resolution of the situation.

(Interim final rule) The interim final rule, § 1.276(b)(9) defines ''port of arrival'' as ''the water, air, or land port at which the article of food is imported or offered for import into the United States, *i.e.*, the port where the article of food first arrives in the United States,'' (§ 1.276(b)(9)). This port may be different from the port where consumption or warehouse entry or FTZ admission documentation is presented to CBP. The interim final rule (§ 1.285(b)(10)) also defines port of entry as follows:

11. Registration Number (§ 1.276(b)(11))

Although the term appears in several places in the proposed rule, the term ''registration number'' was not defined.

(Comments) No comments addressed the definition or meaning of ''registration number.''

(Response) To clarify that the term refers to registration of food facilities, the interim final rule defines ''registration number'' as the registration number assigned by FDA under section 415 of the FD&C Act and 21 CFR part 1, subpart H, § 1.276(b)(11). Specific comments addressing when a registration number is required and other aspects of providing registration numbers as information submitted in prior notice are addressed later in this preamble—see ''What Information Must be in a Prior Notice?'.

12. Shipper (§ 1.276(b)(12))

Section 801(m)(1) of the FD&C Act requires that the ''shipper of the article'' be provided in a prior notice submission. The proposed rule included the shipper as required information in a prior notice, but did not define the term ''shipper.''

(Comments) FDA received no comments concerning the meaning of this term.

(Response) In the proposed rule, we described the ''shipper'' as ''the person who arranges for a shipment to get to its first destination in the United States * * *. The shipper is usually a foreign firm that is located or maintains an address in the country from which the

article was shipped.'' (68 FR 5437). However, in drafting the interim final rule, we have realized that this description was not written in a way that was useful in identifying the shipper in the case of food imported by international mail. Accordingly, we have revised the description of the ''shipper'' and included it in the definitions to make it easier to find.

The definition is based on the description of ''shipper'' used by CBP in their proposed rule, ''Required Advance Electronic Presentation of Cargo Information,'' published in the **Federal Register** on July 23, 2003 (68 FR 43574 at 43577), which is similar to, but clearer than, the description we used in the preamble to the proposed prior notice rule.

(Interim final rule) The interim final rule (§ 1.276(b)(12)), defines ''shipper'' as ''the owner or exporter of the article of food who consigns and ships the article from a foreign country or the person who sends an article of food by international mail to the United States.''

13. United States (§ 1.267(b)(13))

Although the term appears in several places in section 801(m) of the FD&C Act itself, the proposed rule did not contain a definition of ''United States.''

(Comments) A comment seeks clarification whether the prior notice regulation applies to food imported into Guam, the U.S. Virgin Islands, the Northern Mariana Islands, and other U.S. Territories.

(Response) This comment raises the question of what the term ''United States'' means for purposes of section 801(m) of the FD&C Act. In construing the prior notice provision of the Bioterrorism Act, FDA is confronted with two questions. First, has Congress directly spoken to the precise question presented? (''*Chevron* step one'') (*Chevron, U.S.A., Inc.* v. *NRDC, Inc.,* 467 U.S. 837, 842 (1984)). To find no ambiguity, Congress must have clearly manifested its intention with respect to the particular issue (*Young* v. *Community Nutrition Institute,* 476 U.S. 974, 980 (1986)). If Congress has spoken directly and plainly, the agency must implement Congress's unambiguously expressed intent (*Chevron*, 467 U.S. at 842–843). If, however, the Bioterrorism Act is silent or ambiguous as to the meaning of ''United States,'' FDA may define ''United States'' in a reasonable fashion (''*Chevron* step two''); (*Chevron*, 467 U.S. at 842–843; *FDA* v. *Brown & Williamson Tobacco Corp.*, 529 U.S. 120, 132 (2000)). The agency has determined that, in enacting section 801(m) of the FD&C Act, Congress did not speak directly and precisely to the meaning of ''United States.''

The FD&C Act does apply to Guam, the U.S. Virgin Islands, the Northern Mariana Islands, and other U.S. Territories. Section 201(a)(1) of the FD&C Act (21 U.S.C. 321 (a)(1)) defines the term ''State'' to mean any State or Territory of the United States, the District of Columbia, and the Commonwealth of Puerto Rico. The term ''Territory'' is defined to mean any Territory or possession of the United States, including the District of Columbia, and excluding the Commonwealth of Puerto Rico and the Canal Zone, section 201(a)(2) of the FD&C Act (21 U.S.C. 321(a)(2)). However, the terms ''State'' and ''Territory'' are not used in section 801(m) of the FD&C Act.[3] Instead, section 801(m) of the FD&C Act deals with ''articles imported or offered for import into the United States,'' (section 801(m)(1)).

The term ''United States'' is not defined in the FD&C Act's general definitions in section 201. Nor is it defined in section 801(m) of the FD&C Act. It is defined for purposes of section 702(a) of the FD&C Act (21 U.S.C. 372(a)), which provides:

> In the case of a food packed in the Commonwealth of Puerto Rico or a Territory [FDA] shall attempt to make inspection of such food at the first point of entry within the United States * * *. For the purposes of this subsection, the term 'United States' means the States and the District of Columbia.

This definition in section 702(b) seems to imply that, in other places in the FD&C Act, the term ''United States'' would include all Territories. However, in section 801(m) of the FD&C Act, the term ''United States'' appears as part of the phrase ''for purposes of enabling inspection of such [food] articles at *the ports of entry* into the United States'' (emphasis added). As defined by CBP, ''port of entry'' means ports within the part of the United States that has been denominated as the ''Customs territory of the United States.'' (19 CFR 101.1 and 101.3). Notably, though, the Territories are not considered part of the Customs territory of the United States. CBP defines ''Customs territory of the United States'' to ''include[] only the States, the District of Columbia, and Puerto Rico.'' (19 CFR 101.1).

Because of this reference to ''the ports of entry into the United States,'' FDA has concluded that the term ''United States'' is best interpreted in section 801(m) of the FD&C Act to be the Customs territory of the United States and include only the 50 States, the District of Columbia, and Puerto Rico, but not the U.S. Territories and possessions. Defining the ''United States'' to be the Customs territory of the United States will maximize FDA's ability to coordinate prior notice with the CBP entry process, as CBP entry is made for articles from the Territories when they arrive in the Customs territory of the United States. Thus, section 801(m) of the FD&C Act does not apply to articles of food imported or offered for import into Guam, the U.S. Virgin Islands, the Northern Mariana Islands, and other U.S. Territories; section 801(m) does apply, however, when articles of food are imported or offered for import from the Territories into the United States as defined by § 1.276(b)(11) of the interim final rule.

(Interim final rule) The interim final rule (§ 1.276(b)(13)), defines ''United States'' to mean the Customs territory of the United States, *i.e.*, the 50 States, the District of Columbia, and the Commonwealth of Puerto Rico, but not any other part of the United States.

14. You (§ 1.276(b)(14))

The proposed rule defined ''you,'' based on who was authorized to submit prior notice, as ''the purchaser or importer of an article of food who resides or maintains a place of business in the United States, or an agent who resides or maintains a place of business in the United States acting on the behalf of the U.S. purchaser or importer or the arriving carrier * * *'' or, if known, the in-bond carrier.

(Comments) No comments were received concerning the definition of ''you.'' However, comments were received about who may submit prior notice.

(Response) Discussion of those comments and our responses are found in the section ''Who is Authorized to Submit Prior Notice?'' FDA decided, based on revisions to who may submit prior notice, to revise the definition of ''you.'' The interim final rule clarifies that ''you'' means the persons (*i.e.*, individuals and firms) submitting or transmitting the prior notice. The submitter is responsible for the prior notice. The persons who send the prior notice are transmitters. If the submitter sends the prior notice, he or she is both

[3] The terms ''State'' and ''Territory'' are key to the FD&C Act's definition of ''interstate commerce,'' which is, in turn, key to many of the FD&C Act's general inspection and enforcement provisions, see, *e.g.*, sections 301, 304, and 704 (21 U.S.C. 331, 334, and 374). However, while articles that ''are imported or offered for import into the United States,'' section 801(m)(1) of the FD&C Act, are in ''interstate commerce,'' see, *e.g.*, *U.S.* v. *2,998 Cases * * * First Phoenix Group, Ltd, 64 F.3d 984 (5th Cir. 1995), the term* ''interstate commerce'' does not appear in section 801(m).

the submitter and transmitter. FDA notes that all messages sent via the FDA PN System Interface will be sent to the transmitter. If prior notice is submitted via ABI/ACS, all messaging goes to the customs broker or self-filer via ABI/ACS.

(Interim final rule) The interim final rule (§ 1.276(b)(14)), defines ''you'' as the person submitting the prior notice (the ''submitter'') or the person transmitting prior notice information on behalf of the submitter (the ''transmitter'').

13. Summary of the Interim Final Rule

The interim final rule defines the following terms:

- The act;
- Calendar day;
- Country from which the article originates;
- Country from which the article is shipped;
- FDA Country of Production;
- Food;
- Grower;
- International mail;
- No Longer in Its Natural State;
- Port of arrival;
- Port of entry;
- Registration Number;
- Shipper;
- United States; and
- You.

D. ''What Is the Scope of This Subpart?'' (Section 1.277 Proposed as § 1.276)

FDA proposed that the prior notice requirements apply to food for humans and other animals that is imported or offered for import into the United States. The proposed rule specified that this included food that is imported or offered for import into U.S. FTZs, for consumption, storage, immediate export from the port of entry, transshipment through the United States to another country, or import for export. The proposed rule said that prior notice did not apply to food carried by an individual in that individual's personal baggage for that individual's personal use, meat food products, poultry products, and egg products that are subject to the exclusive jurisdiction of USDA.

(Comments) Some comments state that the prior notice requirements should not apply to food that is brought across the U.S. border but not for consumption in the United States. In particular, the comments focus on food exported from the port of arrival, food imported for transshipment and export from another port, and food imported for further processing and export. The comments argue that Congress did not envision that the prior notice requirements would cause importers to give notice of food not for consumption within the United States and that notice of such food would not give FDA any useful or actionable information. One comment states that the Bioterrorism Act repeatedly refers to ''offered for import into the United States'' and concludes, based on this phrase, that prior notice should apply only to food for consumption by the citizens of the United States. One comment points to statutory language that stipulates ''for human and animal consumption.'' Based on this language, the comment argues that FDA would exceed its statutory authority by requiring prior notice for shipments not intended for consumption within the United States. Another comment states that prior notice should not apply to food of U.S. origin, especially if it was simply transshipped through another country then ''re-imported'' into the United States.

(Response) These comments on scope raise the question of what Congress intended the phrase ''imported or offered for import into the United States'' to mean for purposes of section 801(m) of the FD&C Act. In construing the prior notice provision of the Bioterrorism Act, FDA is confronted with two questions. First, has Congress directly spoken to the precise question presented? (''*Chevron* step one''). (*Chevron, U.S.A., Inc.* v. *NRDC, Inc.,* 467 U.S. 837, 842 (1984)). To find no ambiguity, Congress must have clearly manifested its intention with respect to the particular issue (*Young* v. *Community Nutrition Institute*, 476 U.S. 974, 980 (1986)). If Congress has spoken directly and plainly, the agency must implement Congress's unambiguously expressed intent (*Chevron*, 467 U.S. at 842–843). If, however, the Bioterrorism Act is silent or ambiguous as to the meaning of ''imported or offered for import into the United States,'' FDA may interpret the phrase in a reasonable fashion (''*Chevron* step two''); (*Chevron*, 467 U.S. at 842–843; *FDA* v. *Brown & Williamson Tobacco Corp.,* 529 U.S. 120, 132 (2000)).

The agency has determined that, in enacting section 801(m) of the FD&C Act, Congress did not speak directly and precisely to the meaning of ''imported or offered for import into the United States.'' For the reasons in the following paragraphs, FDA has determined that, for purposes of section 801(m) of the FD&C Act, the phrase ''imported or offered for import into the United States'' can reasonably be interpreted to apply to articles that are brought into the United States for consumption in the United States, for transshipment through the United States and export to another country, for further processing in the United States and export, and articles of U.S. origin that are ''re-imported'' back into the United States. We have also determined that the phrase ''imported or offered for import into the United States'' can reasonably be interpreted to exclude articles that are brought to the United States for the purpose of being exported without ever leaving the port of arrival until export.

Neither the Bioterrorism Act nor the FD&C Act defines this phrase. Moreover, courts that have considered the meaning of ''import'' or similar terms in other statutes have not always arrived at the same conclusions: Sometimes ''import'' means simply to bring in, but other times ''import'' means to bring in with the intent to unlade or enter (*Procter & Gamble Manufacturing Co.* v. *U.S.,* 19 C.C.P.A. 415, 422 (C.C.P.A. 1932) (to import ''may mean to bring goods within the jurisdictional limits of the country * * *; or it may mean the time when it is withdrawn from the warehouse and enters the commerce of the country''); *compare, e.g., Canton R. Co.* v. *Rogan,* 340 U.S. 511, 514–15 (1951) (''to import means to bring into the country''); *Brown* v. *Maryland,* 25 U.S. 419, 426, 437–38 (1827) (''What, then, are 'imports'? The lexicon informs us, they are 'things imported.' If we appeal to usage for the meaning of the word, we shall receive the same answer. They are the articles themselves which are brought into the country.'') *with United States* v. *Watches, Watch Parts, Calculators & Misc. Parts,* 692 F. Supp. 1317, 1321 (S.D. Fla. 1988); *United States* v. *Commodities Export Co.,* 14 C.I.T. 166, 169–70 (Ct. Int'l Trade 1990) (''once goods are within the jurisdictional limits of the United States with the intent to discharge, they are imports under this definition''); *United States* v. *Boshell,* 14 U.S. Cust. App. 273, 275–77 (Ct. Cust. App. 1922) (''The common ordinary meaning of the word 'import' is to bring in. Imported merchandise is merchandise that has been brought within the limits of a port of entry from a foreign country with intention to unlade, and the word 'importation' as used in tariff statutes, unless otherwise limited, means merchandise to which that condition or status has attached'')).

In considering what is a reasonable interpretation, we considered the language and purpose of section 801(m) of the FD&C Act, as well as the other provisions of the Bioterrorism Act and section 801 of the FD&C Act. Section 801(m)(1) of the FD&C Act states, ''In the case of an article of food that is

being imported or offered for import into the United States, the Secretary * * * shall by regulation require * * * the submission to the Secretary of a notice * * *.'' FDA notes that Congress did not explicitly limit this provision to articles of food that are intended for consumption in the United States. However, such limiting language does appear in section 415 of the FD&C Act, which requires certain food facilities to register with the agency. This shows that when Congress crafted the Bioterrorism Act, it knew how to impose the limitation sought by the comments. But neither section 801(m) of the FD&C Act nor its legislative history contains language suggesting this limitation.

The purpose of the Bioterrorism Act is ''to improve the ability of the United States to prevent, prepare for, and respond to bioterrorism and other public health emergencies.'' The prior notice provision furthers this goal by enhancing the agency's ability to inspect imported food upon arrival in the United States. Excluding from prior notice food that is brought into the United States for transshipment or further processing, rather than consumption, would run counter to the purpose of the Bioterrorism Act. Articles entered at the port or arrival under T&E entries with the stated intent to transship and export may be diverted for consumption in the United States and thus remain here rather than leave from another port. Some of this diversion is legitimate; under CBP regulations, importers may change their minds and file a superseding consumption entry. In addition, unscrupulous importers may file a T&E entry instead of a consumption entry to avoid paying duties on foods for consumption in the United States. Unscrupulous importers may also file a T&E entry instead of a consumption entry to try to avoid FDA review of their merchandise: generally, FDA does not receive any notice of these kinds of entries from CBP because these entries are not filed through ABI/ACS.

If we were to interpret ''imported or offered for import'' to exclude those entries, we could be creating a significant potential gap in section 801(m) of the FD&C Act's coverage. An importer could simply bring in an article of food under a T&E entry without giving prior notice and then, as allowed by CBP regulations, file a consumption or other entry. Thus, this exclusion would create a loophole that could be exploited by those who want to avoid giving prior notice, even for articles of food that are for consumption in the United States. Given the stated purposes of the Bioterrorism Act and of section 801(m) of the FD&C Act, FDA has concluded that it is reasonable to interpret ''imported or offered for import into the United States'' to include articles of food entered for transshipment and exportation.

Section 801(a) of the FD&C Act sets out the basic admissibility procedure and standards for foods, drugs, devices, and cosmetics, ''which are being imported or offered for import into the United States.'' As with section 801(m) of the FD&C Act, nothing in section 801(a) limits its requirements just to articles that are intended for consumption in the United States. Indeed, section 801(d)(3) of the FD&C Act exempts from section 801(a)'s admissibility standards certain drugs, devices, food additives, color additives, and dietary supplements if these items are intended at the time of ''importation'' for further processing or incorporation into a product that will be exported. This exemption is only necessary if the phrase ''imported or offered for import'' in section 801(a) includes the bringing into the country of some types of goods that are for processing but not consumption in the United States. Thus, in the context of section 801(a) of the FD&C Act, ''imported or offered for import into the United States'' applies to more than food intended for consumption in the United States. Finally, section 801(d)(1) of the FD&C Act, which limits the circumstances under which U.S.-made drugs can be imported back into the United States, makes it clear that the phrase ''imported or offered for import'' in section 801(a) applies to items made in the United States, exported, and then ''re-imported.''

In light of the text of section 801(m) of the FD&C Act, its purpose, and these other provisions in section 801, we believe it is reasonable that this interim final rule applies to food that is brought into the United States for ''consumption'' (immediate or otherwise) in the United States, for transshipment through the United States and export, or for further processing in the United States and export (often referred to as ''import for export''), and to food that is ''re-imported.'' In addition, FDA has concluded in this interim final rule that there are compelling policy reasons for adopting this reasonable definition of ''imported,'' ''offered for import,'' and ''importation.''

However, when it comes to articles that are imported then exported directly from their port of arrival, we have concluded that it is reasonable to interpret the term ''imported or offered for import'' to exclude them from the prior notice requirements.

Food that is brought to a U.S. port but is then directly exported from that port of arrival is entered under a CBP IE entry and subject to the limitations of an IE bond. In essence, this food may not leave the port of arrival until export. These imports are thus subject to almost identical restrictions as food that is refused under section 801(m)(1) of the FD&C Act—foods that are imported under an IE entry may not leave the port of arrival unless exported. Given that controls already exist to ensure that these articles are not released from the port of arrival, FDA believes that it is reasonable to interpret 801(m) as excluding these imports from section 801(m) of the FD&C Act's prior notice requirements.

(Comments) One comment asks that other products covered by USDA programs (such as products included in ''CFR(Q37)'') be exempt from prior notice in the same manner as foods under the exclusive jurisdiction of USDA.

(Response) The comment did not provide more detail concerning what program is referred to by ''CFR(Q37).'' As set out in section 801(m)(b)(3)(B) of the FD&C Act, the interim final rule provides that meat food products, poultry products, and egg products that are subject to the exclusive jurisdiction of the USDA under the Federal Meat Inspection Act (21 U.S.C. 601 *et seq.*), the Poultry Products Inspection Act (21 U.S.C. 451 *et seq.*), or the Egg Products Inspection Act (21 U.S.C. 1031 *et seq.*) are not subject to FDA's prior notice requirements. With regard to other USDA programs, section 315 of the Bioterrorism Act states that no part of Title III should be construed to alter the jurisdiction between USDA and FDA. Notably, under current practice, FDA may have jurisdiction over an imported food under the FD&C Act and USDA may have jurisdiction over an imported food under one or more statutes that it administers, or the two agencies may have joint jurisdiction over an imported food. Under its section 315, the Bioterrorism Act does not change this structure. Accordingly, only imported food that is regulated exclusively by USDA is exempt from prior notice.

In addition, we believe that the statute requires prior notice to be submitted to FDA. As described elsewhere in greater detail, we are working with CBP to modify our existing ABI/ACS and OASIS systems to permit additional data sharing to satisfy prior notice. Although it is theoretically possible for FDA to obtain information from agencies other than CBP, the stringent

timeframes for issuing this interim final rule do not provide FDA adequate time to reconcile the different information required or to work with the other agencies to have them amend their existing requirements to capture all the information FDA needs. Merely obtaining existing information about the food from other agencies would not guarantee that FDA has the information required by section 801(m) of the FD&C Act's prior notice requirements because there is wide variation in the purposes and information required by other government programs. We would also need to work with other agencies to ensure the confidentiality of nonpublic prior notice information under relevant information disclosure laws, *e.g.*, 21 CFR 20.85 (Federal), 20.88 (State), and 20.89 (foreign). Because a purpose of providing prior notice to FDA is to assist FDA in responding to bioterrorism incidents or other food-related emergencies, FDA must have the required information readily accessible. If FDA has to coordinate with other agencies or governments to obtain from them the information necessary to respond to such an emergency, FDA may be prevented from responding to the emergency in a timely manner.

FDA notes that it is dedicated to increasing information-sharing capabilities with other agencies even after this interim rule is in effect, and we will continue to work with other government agencies to further streamline the prior notice process, consistent with our statutory obligations.

(Comments) Several comments suggest that exclusion for baggage in the proposed rule should be broadened in the final rule to include all food in baggage, even food that is not for the traveler's personal use. For example, one comment reasons that samples carried in the baggage of company representatives (or sent unaccompanied) generally do not enter commercial trade.

(Response) FDA disagrees. Except as already provided for, section 801(m) of the FD&C Act does not authorize an exclusion from prior notice for all food imported or offered for import into the United States in baggage. In the preamble to the proposed rule, we explained that the information that section 801(m)(1) of the FD&C Act requires in a prior notice, in conjunction with the purpose of the provision, demonstrates that Congress did not intend prior notice to apply to food that travelers bring into the United States in their personal baggage for personal use (*i.e.*, consumption by themselves, family or friends, not for sale or other distribution). We reasoned that when travelers bring food back from their travels in their personal baggage for their own use, we do not believe that Congress intended for us to characterize such travelers as ''shippers'' for purposes of section 801(m) of the FD&C Act.

When food is not being carried by or otherwise accompanying an individual for his or her personal use, there is a ''shipper''—the person or entity on whose behalf the traveler is bringing in the food. Thus, by its terms, section 801(m) of the FD&C Act requires that food carried by or otherwise accompanying an individual arriving in the United States that is not for personal use be subject to prior notice. In addition, were we to adopt such an exemption, it would create a potentially significant loophole, which could defeat the purpose of prior notice. For example, travelers coming from Latin America sometimes carry local soft cheeses for sale in the United States (Ref. 16). In fact, these travelers often are not staying in the United States for any period of time, but are merely transporting cheese to sell in the United States in their luggage or baggage. These cheeses have been tested by FDA and found positive for listeria, salmonella, and other pathogens associated with raw milk and insanitary conditions. Consumption of such contaminated cheese has been associated with illnesses and deaths. Another example is travelers arriving by automobile who carry cases of shellfish from unapproved foreign growing locations. These shellfish may be contaminated with a variety of illness-causing pathogens including vibrio cholerae or Norwalk virus. These shellfish are often not destined for personal consumption but for sale directly to the public or for consumption by the public at restaurants. Finally, trade samples are imported or offered for import to generate sales, which is a commercial, not personal, use. Thus, there is a ''shipper'' when these samples are brought to the United States.

FDA notes that it is changing the proposed rule by removing the term ''baggage'' and referring instead to food carried by or otherwise accompanying an individual. This change clarifies that the exclusion applies to food that might not be regarded as ''baggage'' but, nonetheless, accompanies the traveler. For example, food in the trunk of a car is not in baggage, but it accompanies the driver and any passengers.

(Comments) Comments ask that any food imported for personal use which arrives in the country by common carrier (*e.g.*, express carrier, truck, plane) should be treated the same as food imported for personal use and carried with a traveler.

(Response) FDA disagrees. Section 801(m) of the FD&C Act does not authorize a broad exclusion from prior notice for all food imported or offered for import for personal use. In the preamble to the proposed rule, we explained that the information that section 801(m)(1) of the FD&C Act requires in a prior notice, in conjunction with the purpose of the provision, demonstrates that Congress did not intend prior notice to apply to food that travelers bring into the United States in their personal baggage for personal use (*i.e.*, consumption by themselves, family or friends, not for sale or other distribution). We reasoned that when travelers bring food back from their travels in their personal baggage for their own use, we do not believe that Congress intended to characterize such travelers as ''shippers'' for purposes of section 801(m) of the FD&C Act. However, when food is shipped by an individual or business in another country to a consumer in the United States for his or her personal use (or otherwise), there is a ''shipper'' as that term is used in section 801(m)(1) of the FD&C Act and defined in § 1.276(b)(10). Accordingly, there is no basis in section 801(m) of the FD&C Act for concluding that Congress did not intend prior notice to apply to articles sent (as opposed to carried) to the United States for the recipients' personal use.

(Comments) One comment asked that FDA address the issue of noncommercial family food shipments and to add these to the list of exemptions from prior notice. Another comment stated that a food shipment consisting of one noncommercial shipper sending food to another noncommercial recipient (*e.g.*, a friend abroad shipping cookies to a friend in the United States) should be outside the scope of the prior notice requirement.

(Response) FDA agrees in part and we have added a provision that excludes personal gifts of homemade food from prior notice. Although we believe that this food is imported into the United States, the information that § 801(m)(1) of the FD&C Act requires in a prior notice, in conjunction with the purpose of the provision, demonstrates that Congress did not intend prior notice to apply to homemade food sent as a personal gift by the maker to a recipient in the United States. In particular, under § 801(m)(1) of the FD&C Act, a prior notice must contain the identity of the manufacturer of the food. When an individual makes a food in their home as a gift for a relative or friend, we do not believe that Congress intended for

us to characterize such cooks as ''manufacturers'' for purposes of § 801(m) of the FD&C Act.

(Comments) Several comments suggest that the final rule should not apply to foods that arrive by international mail or express carriers.

(Response) FDA disagrees. Except for the exclusions already described for food for personal use that is carried by or otherwise accompanying a traveler and homemade gifts, section 801(m) of the FD&C Act applies to food regardless of the method of importation. Thus, foods that arrive by international mail and by express carriers (*e.g.*, Federal Express, United Parcel Service, *etc.*) are subject to section 801(m)'s prior notice requirements. Indeed, FDA notes that foods, drugs, devices, and cosmetics that arrive by mail or express carriers are currently subject to admissibility determinations under section 801(a) of the FD&C Act, which also uses the phrase ''imported or offered for import.'' Finally, were we to adopt such an exemption, it would create a potentially significant loophole, which could defeat the purpose of prior notice. Those who did not want to or could not comply with prior notice requirements would be able to bring articles of food in by mail or express carrier. While this might not be practical for all kinds of foods, many foods are regularly imported by mail or express carrier, *e.g.*, dietary supplements and specialty foods ordered by U.S. consumers from foreign firms. For example, one commenter states its company provides, through Internet sales, special dietary foods and fresh baked foods that are shipped via express carriers directly to consumers at the rate of around 1,000 home deliveries per week.

(Comments) Several comments suggest that the final rule should not apply to various kinds of samples, including trade and market research samples (*i.e.*, samples sent or carried in for the purpose of selling products or conducting market research), trade show samples, samples for testing for nutritional, safety, quality control, or quality assurance reasons, and samples for basic research. These comments reason that samples used for marketing are not intended for retail consumption and generally do not enter commercial trade and, thus, are not intended for use as food. In the case of samples for testing, comments reason that these samples are for the individual's specific and limited personal use and not for further distribution to others and should be exempted as samples are under federal poultry and meat inspection regulations.

(Response) FDA agrees in part. If the samples are items that are in such early stages of research and development that they cannot yet be considered food under § 1.276(b)(5) of the interim final rule, they would not be subject to prior notice requirements. An example of such an item is a substance being tested for possible preservative qualities before being tested in any food. However, samples of food, including those for test marketing, are clearly subject to prior notice as they are ''articles of food imported or offered for import'' as stated in section 801(m) of the FD&C act. For example, in the summer of 2003, FDA received a report from a poison control center in country T concerning the acute poisoning of 9 men (one died) from ingestion of an herbal fermented wine. Symptoms occurred within minutes. Reports indicated that this product may have been exported to the United States in small quantities for test marketing in restaurants. This underscores the importance of FDA receiving prior notice of all food imported or offered for import.

(Comments) One comment suggests that food for research and development purposes sent directly to facilities that are registered under section 415 of the FD&C Act should be exempt.

(Response) If the item is indeed food under this subpart and it is not otherwise excluded under § 1.277(b), prior notice is required. There is no basis in the statute for an exemption based on the fact that an article of food is being sent to registered facilities.

(Comments) Comments ask that articles of food that are of *de minimis* value (*i.e.*, less than $200) be exempt from prior notice. The comments argue that such small shipments for personal use could hardly qualify as a risk to the domestic food supply. They also point out that enforcing prior notice on such articles would be difficult and burdensome to FDA. In addition, they state that prior notice for these items would be a burden on consumers as they usually do not have an agent in the United States to represent them.

(Response) FDA notes that it has removed the restrictions on who can submit prior notice. Thus, foreign sellers or shippers can file prior notices for these kinds of shipments under the interim final rule. Low-value food items are clearly subject to the terms of section 801(m) of the FD&C Act as they are ''articles of food imported or offered for import'' as stated in section 801(m). Moreover, we do not agree that low value shipments are always imported for personal use or would present only *de minimis* risks, such that an exemption can be justified under the *de minimis* doctrine. First, a low value is not necessarily a good indication that the article is for personal use. Many food items (*e.g.*, produce) can have a low invoice value at importation, especially if the shipment is not large. Moreover, in our experience, many specialty, gourmet, ethnic, and exotic foods are often imported for commercial purposes in very small amounts. Thus, a shipment of bottled cooking oil or a beverage contaminated with toxic chemicals may be represented as low-value or low-volume but could have a wide, and very negative, public health impact. In addition, we note that misdeclaration of value of articles of food at entry can be a problem. Finally, any burden such an exemption might relieve would likely be offset by the burden of administering it.

(Comments) Comments ask for an exemption for food imported into the United States for sale in duty free stores.

(Response) FDA disagrees. Unless the food is imported and exported without leaving the port of arrival until export, as set out in § 1.277(b)(2), there is no basis in section 801(m) of the FD&C Act for such an exemption.

(Comments) Some comments recommend that prior notice be waived for foods in situations that they characterize as ''low risk.'' These situations were identified in the comments as any one of the following:

- Exported from U.S.-owned foreign companies;
- Transferred between commonly owned facilities (intra-company transfers);
- Subject to high quality control standards and/or produced in highly-regulated businesses;
- Shipped under seal or in bond;
- Entered as high-volume, repetitive shipments;
- Processed through CBP's Border Release Advanced Selectivity Screening (BRASS); and
- Associated with a program of assessment of low risk, such as the Customs-Trade Partnership Against Terrorism (C–TPAT); Free and Secure Trade program (FAST); or food safety and security programs of foreign government regulatory authorities.

(Response) FDA disagrees. As explained previously, section 801(m) of the FD&C Act applies to all food imported or offered for import into the United States except as outlined in § 1.277(b). Nothing in section 801(m) of the FD&C Act authorizes an exemption for articles of food that are ''low risk'' or covered by programs of other agencies, such as CBP or foreign government regulatory authorities.

Summary of the Interim Final Rule

Section 1.277(a) provides that the interim final rule applies to food for humans and other animals that is imported or offered for import into the United States. This covers food for use, storage, or distribution in the United States, including food for gifts, trade and quality assurance/quality control samples, food for transshipment through the United States to another country, food for future export, and food for use in a U.S. FTZ. Section 1.277(b) sets out the exclusions from prior notice. It excludes food carried by or otherwise accompanying an individual arriving in the United States for that individual's personal use (*i.e.*, consumption by the individual or his or her family or friends, not for sale or other distribution); food that was made by an individual in his or her personal residence and sent by that individual as a personal gift (*i.e.*, for nonbusiness reasons); food that is imported then exported without leaving the port of arrival until export; and meat food products, poultry products, and egg products subject to the exclusive jurisdiction of USDA under the Federal Meat Inspection Act (21 U.S.C. 601 *et seq.*), the Poultry Products Inspection Act (21 U.S.C. 451 *et seq.*), or the Egg Products Inspection Act (21 U.S.C. 1031 *et seq.*).

E. ''Who Is Authorized To Submit Prior Notice?'' (Section 1.278 Proposed as § 1.285)

The proposed rule (§ 1.285) provided that a purchaser or importer of an article of food who resides or maintains a place of business in the United States or an agent thereof was authorized to submit prior notice. FDA noted that a broker/filer would be authorized to be a submitter if it was the U.S. agent of the U.S. importer or U.S. purchaser.

FDA further proposed that if the article of food is imported for in-bond movement through the United States for export, the prior notice must be submitted by the arriving carrier or, if known, the carrier making the in-bond entry.

(Comments) Many comments object to the limitation that only a person who resides or maintains a place of business in the United States can submit the prior notice. Some comments state that foreign-based companies that sell food directly to U.S. individuals for their own use, including companies that sell via the Internet, cannot expect their individual customers to submit prior notice. In addition, comments point out that, under some circumstances, the U.S. importer or purchaser or carrier would not have all the information required by prior notice, but that other entities, *e.g.*, the foreign manufacturer/processor, shipper, or exporter, would have the required information. Many comments state that entities other than U.S. firms or carriers should be allowed to submit prior notice.

(Response) FDA agrees and has removed this restriction on who can submit prior notice. Accordingly, § 1.278 of the interim final rule provides that any person with knowledge of the required information may submit prior notice to FDA. Thus, any person may now take responsibility for submitting prior notice for a particular article of food, as long as that person can provide all the required information. This person is referred to as the submitter in the interim final rule. The interim final rule also states that the submitter may use another person to transmit the required information to FDA. For ease of reference, the person who transmits the prior notice is referred to as the transmitter in the interim final rule. If the submitter submits and transmits the prior notice, he or she is both the submitter and the transmitter. FDA notes that all reply messages sent by the FDA PN System Interface will be sent to the transmitter. If prior notice is submitted via ABI/ACS, all reply messaging goes to the customs broker or self-filer. FDA has also revised the definition of ''you'' accordingly.

(Comments) Comments from customs brokers noted that, although they are responsible for timely submission of all documentation required for import entry, they are not responsible for verifying the accuracy of information provided to them from their customer. Comments ask FDA to clarify in the final rule that the customs broker is merely an agent for the filing of information obtained from the importer and is not responsible for either the adequacy or accuracy of the data submitted. Comments assert that the responsibility of the customs broker is to accurately submit the information provided by his or her client in correct form and in a timely manner.

(Response) The submitter of prior notice information, regardless of the method of or person transmitting the information, is responsible for the accuracy of that information. If the transmitter is not the submitter, we expect the transmitter, whether he or she is a licensed customs broker or other kind of agent, to exercise diligence and care to transmit the information provided by the submitter accurately.

(Interim final rule) Proposed § 1.285 has been changed in the interim final rule to § 1.278, ''Who is authorized to submit prior notice?'' The interim final rule states that any person with knowledge of the required information may submit prior notice. This person is the submitter. The submitter may also use another person to transmit the required information on his or her behalf. The person who transmits the information to FDA is the transmitter. The submitter and the transmitter may be the same person. The interim final rule also defines ''you'' to mean the submitter or transmitter (§ 1.276(b)(12)).

F. ''When Must Prior Notice Be Submitted to FDA?'' (Section 1.279 Proposed as § 1.286)

FDA proposed that the prior notice must be submitted to FDA no later than 12 noon of the calendar day before the day the article of food will arrive at the border crossing in the port of entry. As described in the proposal, this was based on FDA's assessment of what time was needed to meet its statutory mandate of receiving, reviewing, and responding to prior notice.

(Comments) Generally, the comments recommend that FDA adopt a shorter, rolling prior notice submission timeframe to reduce the burden of the prior notice requirement on the smooth flow of commerce. Many comments recommend a specific timeframe for submission of prior notice. These recommendations ranged from submission of an annual report for repetitive shipments, to submission of the notice at the time of distribution of the food after it arrives in the United States.

Many comments recommend that the prior notice submission timeframe be linked to a mode of transportation or type of port of entry, and others recommend that it be linked to the type of food. Many comments recommend a specific timeframe and associated that timeframe with either a mode of transportation/type of port or with a type of food or both. Comments recommend that prior notice be submitted 8 hours before arrival; some associate the 8 hours timeframe with a water mode of arrival only, while others associate the 8 hours timeframe with nonperishable foods. Many comments recommend that prior notice be submitted 4 hours before arrival; some associating the 4 hours timeframe with land and air modes of arrival only and some associating the 4 hours timeframe with perishable foods (produce and seafood) and live animals only.

(Response) FDA agrees that the time for submission of prior notice should be a rolling timeframe. FDA has determined that the time can be shortened to reduce the effect on the

smooth flow of trade while still providing FDA with sufficient time to receive, review, and respond to the information. FDA also agrees that timeframes should be different for different modes of transport. As such, FDA has revised the rule to require that the timing of submission will be no more than 5 days (except in the case of international mail) and that the prior notice submission be confirmed by FDA for review no less than 2 hours before arriving at the port of arrival by land via road, no less than 4 hours before arriving at the port of arrival by air and land via rail, and no less than 8 hours before arriving at the port of arrival by water.

When food carried by or otherwise accompanying an individual is subject to this rule, the timeframe associated with the manner of the individual's arrival applies. If the individual and article of food are arriving by land via road, the prior notice must be submitted and confirmed at least 2 hours before arrival. If the individual and article of food are arriving by air or by land via rail, the prior notice must be submitted and confirmed at least 4 hours before arrival. If the individual and article of food are arriving by water, the prior notice must be submitted and confirmed at least 8 hours before arrival.

Two major agreements between CBP and FDA allow FDA to reduce significantly the time necessary to receive, review, and respond to prior notice information. First, FDA and CBP have agreed to commission or use CBP staff to perform examinations for FDA when FDA is not present at the port of arrival. Since CBP staff generally will be available where FDA is not, this means that FDA no longer needs lead-time to travel significant distances to conduct inspections. In addition, CBP agreed to modify ABI/ACS to receive, transmit, and communicate prior notice information electronically between CBP and FDA for most entries of imported foods by the statutory deadline in the Bioterrorism Act of December 12, 2003. CBP's assistance with prior notice means that FDA needs far less time to respond to prior notices.

In considering how to modify the timeframes, FDA concluded that setting them by mode of transportation would be the best approach. Mode of transportation is clear and easy to apply and administer, so there is likely to be little confusion about what timeframes apply. If we were to set timeframes based on type of food, *e.g.*, perishable versus nonperishable, we would have to develop and implement a system for determining which articles of food were which. In addition, different articles of food in the same conveyance would be subject to different prior notice timeframes, which would subject all items in the conveyance to the longest timeframe and add an additional layer of complexity that could cause confusion and delays at the border. Moreover, many comments recommended mode of transportation, which suggests that many stakeholders, including industry, believe such a system is workable.

In determining the actual timeframes for submission of prior notice for each mode of transportation, FDA considered the need to provide sufficient time for the agency to review and respond to the information submitted, as well as the current ability of the food industry to provide the information required within the stated timeframe given the differences in lead time before arrival among different modes of transportation. We determined that information for shipments whose transport time is measured in days or weeks (*e.g.*, ocean shipments) is available further in advance of arrival than shipments whose transport time is measured in hours (*e.g.*, land and air shipments.) Staggered prior notice submission timeframes will allow FDA reviewers to direct additional resources to shipments with short transport times and to defer review of shipments with longer transport times. Based on these considerations, FDA established the prior notice timeframes in the interim final rule to associate with the mode of transportation.

FDA is committed to exploring ways to increase integration and reduce the prior notice timeframes further. Accordingly, FDA and CBP will continue working together to determine what is needed to achieve this goal. No later than March 12, 2004, the Commissioners of FDA and CBP will publish a plan, which will include an implementation schedule, to achieve the goal of a uniform, integrated system and to coordinate timeframes for import prior notice information while fulfilling the Bioterrorism Act mandates for air and truck modes of transportation with timeframes finalized by CBP when they finalize the rule entitled ''Required Advance Electronic Presentation of Cargo Information,'' published in the **Federal Register** on July 23, 2003 (68 FR 43574).

For imported food arriving via international mail, the interim final rule requires that prior notice be submitted before the food has been sent. This timeframe allows the FDA PN Confirmation Number to accompany the package, which is necessary to establish that prior notice has been submitted and to match the prior notice submission to the package upon arrival.

(Comments) Some comments recommend that the prior notice submission timeframe be waived for foods exported from U.S.-owned foreign companies. Other comments recommend that a different timeframe be established for foods associated with a program of assessment of low risk, such as the C–TPAT.

(Response) The interim final rule does not provide for a waiver of the timeframe for foods imported by U.S.-owned firms. Nor does the rule provide for a different timeframe for foods or firms covered by programs of other agencies, such as C–TPAT. The interim final rule provides for greatly reduced timeframes for foods based on mode of transportation. These timeframes are what FDA has determined are the minimum timeframes necessary to allow it to satisfy the statutory mandate that the timeframes give the agency the time it needs to ''receive, review, and respond'' to prior notices. However, FDA is also interested in exploring flexible alternatives for submission of prior notice for foods or firms covered by programs of other agencies, such as C–TPAT, or imported by other agencies.

(Interim final rule) Section 1.279(a) in the interim final rule has been revised to require submission of the prior notice to FDA and the submission must be confirmed by FDA for review no less than 2 hours before arriving at the port of arrival by land via road, no less than 4 hours before arriving at the port of arrival by air and land via rail, and no less than 8 hours before arriving at the port of arrival by water. Under § 1.279(b), prior notice may not be submitted more than 5 calendar days before arrival, except in the case of food imported or offered for import by international mail.

Under § 1.279(c), if the article of food is arriving by international mail, the prior notice must be submitted before the food is sent to the United States.

Section 1.279(d) provides that the time of submission is fixed and the prior notice time will start for purposes of determining if prior notice is timely when the prior notice submission is confirmed by FDA for review. FDA will confirm a prior notice once all required information has been submitted and confirmed as facially complete. For example, if the information submitted were to include a registration number, name, city, and country for the manufacture of an article of food, and the system review were to reveal that the registration number does not exist or does not match the name, city, and country of the facility, the FDA PN

System Interface will not provide a confirmation for that prior notice. The transmitter will have an opportunity to correct the rejected information. When the information is corrected, transmitted, and determined to be facially valid, the system will then notify the transmitter and provide the PN Confirmation Number. As set out in § 1.279(d), FDA will notify the transmitter that the prior notice has been confirmed for review with a confirmation that contains a PN Confirmation Number. The prior notice will be considered submitted and the prior notice time will start when FDA has confirmed the prior notice for review.

Under § 1.279(e), the PN Confirmation Number must accompany any article of food arriving by international mail. Under § 1.279(f), a copy of the confirmation (with the PN Confirmation Number) must accompany any article of food carried by or otherwise accompanying an individual (unless excluded under § 1.277(b)(1)), and be provided to CBP or FDA upon arrival.

Additionally, under § 1.279(g) the PN Confirmation Number must accompany any article of food for which the prior notice was submitted through the FDA PN System Interface when arriving in the United States and must be provided to CBP and FDA upon arrival.

G. ''How Must You Submit Prior Notice?'' (§ 1.280 Proposed as § 1.287)

FDA proposed that prior notice and any amendments and updates must be submitted electronically to FDA through a new Web interface. The proposed rule also required submission of hard-copy prior notice, in person or by e-mail or fax, if the FDA system was not operating. Before issuing the proposed rule, FDA consulted with CBP, which was then the U.S. Customs Service of the Department of the Treasury, about the proposed rule and the feasibility of modifying ABI/ACS to accommodate the new prior notice requirement. During these consultations, CBP advised that ABI/ACS could not be modified to accommodate the data requirements of the prior notice regulation by the December 12, 2003, statutory deadline.

(Comments) Many comments focus on the proposed method of submission of prior notice. These comments fall into four broad categories. The first category, which includes the largest number of comments, suggests that FDA work more closely with other agencies, and in some cases other countries, to eliminate redundancies or conflicts in the method of submission. The majority of these comments urge the FDA to work more closely with CBP. A second group of comments addresses the viability of the proposed Web-based system for submission of prior notice. The third category includes suggestions about the prior notice form that was included in the proposed rule. The final category of comments asserts that existing systems and procedures provide adequate defense against a bioterrorism threat and that the proposed regulation is unnecessary.

1a. Work With Other Agencies To Eliminate Redundancies

(Comments) Most comments recommend that FDA and CBP work together to reduce the adverse impact of submission of information in both prior notice and CBP entries. Most of these comments suggest that the existing ACS–OASIS interface between CBP and FDA be used to accept prior notice information. Other comments suggest that much of the information required for prior notice was available in CBP's Automated Manifest System (AMS). Although many comments suggest that the existing systems contained sufficient information to meet the statutory requirements, others recognize that modifications were needed to meet the Bioterrorism Act's requirements.

(Response) FDA and CBP agree with many of the comments made about inter-agency cooperation as well as with the recommendation that we provide a single point of data entry for CBP and FDA for as many kinds of entries as possible. FDA and CBP are committed to the joint implementation of an automated approach to prior notice that will meet the following objectives: (1) Reduce submission of redundant data to the extent possible; (2) build on current operational procedures; and (3) implement the law with minimal disruption to current entry practices.

The interim final rule requires prior notice to be submitted electronically to FDA through CBP's ABI/ACS or the FDA PN System Interface. Prior notice may be submitted through ABI/ACS for all food imports subject to this interim final rule except food imported by international mail or other transactions that cannot be submitted through ABI/ACS and food that has been refused under section 801(m) of the FD&C Act. The proposed rule was based on an initial review by both FDA and CBP of the feasibility of implementing new operational procedures and enhancing existing systems. After further review of the potential technical, legal, and operational impacts, FDA and CBP have determined that the prior notice information required for most types of CBP entries of foods can be submitted through the existing ABI/ACS and provided to FDA. The existing ABI/ACS–OASIS interface allows for communication both between FDA and the customs broker or self-filer (necessary for the submission of prior notice to FDA as required by section 801(m)(1) of the FD&C Act), and between FDA and CBP (necessary for followup at the border). However, although much of the information required for prior notice currently existed in some automated form in ABI/ACS, not all the necessary data were available in the right sequence or at the right time to meet prior notice requirements. Thus, FDA and CBP have been working closely together and enhancing, ABI, ACS, and OASIS to craft operational procedures and systems that meet the requirements of the Bioterrorism Act with minimal impact on existing processes.

Since prior notice is required for some of imported food for which electronic transmission of information to CBP is not available via ABI/ACS and since submission of information through ABI/ACS is not mandatory, an alternative means to submit prior notice will still be needed. Although a CBP entry is not normally submitted in ABI/ACS for T&E entries and IT entries and FTZ admissions, a new transaction format, similar to the existing ABI transactions, will be available for submitting prior notice for these imports through ABI/ACS. The FDA PN System Interface will also be available for international mail, food refused under section 801(m) of the FD&C Act, and those who choose not to submit prior notice through ABI/ACS.

1b. CBP AMS

(Comments) Several comments note that some of the information FDA required for prior notice was already being submitted to AMS and suggested that FDA could retrieve data from AMS rather than ask for a separate submission for prior notice.

(Response) AMS is a module of ACS through which carriers, port authorities, or service bureaus transmit electronically the cargo declaration portion of the inward foreign manifest to CBP. The information submitted to AMS is not sufficient to satisfy section 801(m)(1) of the FD&C Act's requirements. For example, the identities of the manufacturer, grower, FDA product code, and quantity of each article are not submitted to AMS. FDA and CBP have consulted about interfacing with AMS for manifest data and determined that the general cargo data in AMS were simply not suitable to accommodate the detailed information requirements of section 801(m) of the FD&C Act. In addition, no

interface currently exists between AMS and the existing interface with OASIS through the ABI/ACS entry processes, which means FDA does not have any access to AMS data. However, section 801(m) of the FD&C Act requires that prior notice be submitted to FDA. Given the implementation date of December 12, 2003, CBP and FDA concluded that it was not practical to attempt to modify AMS to accommodate the new prior notice requirements when we could enhance the existing ABI/ACS–OASIS interface.

2a. Viability of a Web-Based System

(Comments) A common concern expressed by commenters is the viability of the FDA PN System Interface for the volume of data traffic and the time-sensitive nature of prior notice information. Multiple comments address system availability, the time needed to enter and process the data, and the need for confirmation.

(Response) FDA agrees that implementation of a new FDA PN System Interface as the primary means of data submission for 25,000 plus transactions a day would be challenging, particularly considering the effect on the food industry if the system were not responsive. That concern has been substantially addressed as a result of the commitment by CBP and FDA to work together to enhance the existing ABI/ACS–OASIS interface to accommodate the prior notice requirements. The decision includes the development of a new ABI/ACS ''transaction type'' that will accommodate prior notices for IT entries, T&E entries, and food shipped directly to an FTZ. This new feature further reduces the number and type of transactions that must be submitted through the FDA PN System Interface.

FDA anticipates that less than 10 percent of the total submissions will be submitted through the FDA PN System Interface. The FDA PN System Interface will be available 24 hours a day, 7 days a week. FDA has taken steps to ensure that the FDA PN System Interface can provide adequate response times to support data entry and return of confirmation by reply messaging.

2b. Contingency System

(Comments) FDA received several comments on the need for a contingency plan or backup plan in case of FDA Web system failure. The severity of the consequences if FDA were to fail to receive a prior notice, and the common experience with Web system failures, was of great concern to many of the system's potential users. Many suggestions were made for contingency plans, *e.g.*, information on what FDA plans to do if the automated system is unavailable.

(Response) FDA agrees that plans for contingencies are needed, even with the reduced volume of traffic on the FDA PN System Interface and the existence of two modes of submission. FDA does not plan to exempt any specific categories of food articles from prior notice if systems are not performing; FDA and CBP are working together to develop contingency plans for when the system(s) are not working. The interim final rule, § 1.279(b) through (d), sets out how we will handle prior notice in four ''down-time'' situations: The customs broker's or self-filer's access to ABI/ACS is not working; the ABI/ACS interface is not working; the FDA PN System Interface is not working; and OASIS is not working. In all these situations, an alternative form of prior notice information is required. If access to ABI/ACS is not available, prior notice must be submitted via the FDA PN System Interface. If FDA determines that FDA PN System Interface is not working, prior notice must be submitted manually by those who do not use ABI/ACS. If FDA determines that OASIS is not working, all prior notices must be submitted manually. FDA will issue notification through notices on the FDA Web site at *http://www.fda.gov,* at *http://www.access.fda.gov,* and through messages in ABI/ACS. Once FDA issues this notification, prior notice information must be submitted to FDA by e-mail or by fax.

Manual submissions must be submitted by e-mail or fax. Because all review is being done in a centralized location, we will not accept manual submissions in person. The FDA Web site at *http://www.fda.gov* will have a list of the information required for prior notice submission and the fax number(s) and e-mail address(es) where prior notice can be sent. The list of the information required can be printed. It can also be downloaded to the submitter's or transmitter's word processing system and used as a basis for submitting prior notice information to FDA. Because the FDA PN System Interface at *http://www.access.fda.gov* and FDA's Web site at *http://www.fda.gov* are located on independent platforms, this information will be available even when the FDA PN System Interface is not working. This fax number and the e-mail address will not be activated to accept prior notice information unless FDA determines that the FDA PN System Interface or OASIS is not working. Additional information about the down-time, *i.e.*, confirmation that the FDA PN System Interface or OASIS is down and estimated down-time will be posted at *http://www.fda.gov*—see ''prior notice'' and will be available from the help desk.

2c. Alternate Methods

(Comments) Several comments suggest more than one path for submission of prior notice information. Some comments ask that FDA allow for manual submission, either as a backup, or as an alternate path. Others suggest that some types of ''safe'' products be allowed to bypass prior notice if the system were not performing. Still others suggest that the potential for catastrophic system failure requires FDA to implement 2 interfaces for prior notice data, often implying that ACS was an appropriate alternative system.

(Response) FDA does not agree that a process for manual transmission is needed, except on a contingency basis. FDA believes that, in 2003, persons engaged in international commerce have, or can get, access to the Internet. If the Internet is not accessible by the submitter, he or she can use a customs broker to submit prior notice through ABI/ACS or another person to transmit prior notice through the FDA PN System Interface. As the primary mode of submission, manual transmission would not give adequate time for FDA personnel to receive, review, and respond, unless the timeframes for prior notice in the interim final rule were greatly extended. Thus, manual transmission will be used only as a contingency alternative. FDA also notes that the data quality of manual systems is usually less than satisfactory, because no automated data validation takes place during data entry. The U.S. Government has a strong commitment to reducing paper-based processes and moving toward e-commerce for all business transactions. Accordingly, under the interim final rule, paper-based submissions will not be allowed, except as set forth in § 1.280(c) and (d), by e-mail and fax. However, FDA and CBP do not expect system failures to be a common occurrence.

2d. Security of System

(Comments) Several comments question the security of the system and suggested that the system must have extraordinarily stringent security protocols in place to protect sensitive commercial information and prevent potential terrorists from obtaining information capable of providing cover.

(Response) FDA agrees the information must be secure. Any fraudulent or inadvertent changes in data could affect FDA response and thus affect the health and welfare of

consumers in the United States. FDA has determined that the data security and data integrity requirements of the prior notice data are on par with entry data currently submitted through ABI/ACS to OASIS. Prior notice data submitted through ABI/ACS will have the same security and access controls as entry data currently received through ABI/ACS. Adequate and effective security controls will be placed on the FDA PN System Interface through user account management and authentication processes, and password controls, to ensure data security and integrity.

A number of statutes, regulations, and policies address protection of sensitive information from unauthorized disclosure. Some that are relevant to prior notice include the Clinger-Cohen Act of 1996, the Computer Security Act of 1987, the Trade Secrets Act, 21 CFR 20.61 (Trade Secrets and Commercial or Financial Information Which Is Privileged or Confidential), OMB Circular A–130 (Management of Federal Information Resources), and FDA Staff Manual Guide 3250.15 (Information Technology Security, Data Security—Data Confidentiality). For example, Appendix III to OMB Circular No. A–130 establishes a minimum set of controls to be included in an agency's information security program and requires security controls to be commensurate with the risk and magnitude of the harm resulting from the loss, misuse, or unauthorized access to or modification of information.

3a. Prior Notice Form

(Comments) Several comments suggest changes to the proposed form. Most of these recommend changes in the order of items in the form.

(Response) The draft form that was provided as an attachment to the proposed rule was intended only to provide a graphic summary of the information to be collected by the FDA PN System Interface (68 FR 5334). The form was an illustration, intended to help potential users to visualize the data requirements and to better analyze their relationship and impact. FDA did not intend the draft form to be a sample of the screens that will be available to the user on the proposed FDA PN System Interface. Nor was it intended to be a draft paper form, since paper-based submission will not be acceptable, except as a contingency if the system is not operating.

The actual screens of the FDA PN System Interface are based on standard Web design principles, with primary attention to support of anticipated data entry. The screens will incorporate extensive use of ''pull-down'' lists to assist users in entering their data. For example, transmitters will use a predefined pull-down list of International Standards Organization (ISO) codes for countries to enter the country from which the article is shipped. Screen design places critical data entry items at the beginning of the submission process and uses those items to drive later processes. Data entry processing will also include robust and user-friendly data validation to ensure that transmitters enter data correctly and do not fail prior notice because of inadvertent errors in their data entry screens. Additional description of the FDA PN System Interface is included in the discussion of the interim final rule at the end of this section.

3b. Form Processing

(Comments) Several comments make suggestions about the way the form should be processed, requesting self-populating fields, the ability to change information without redoing the whole form, confirmation after submission, and other features that would make submission easier.

(Response) As noted previously, FDA did not intend the draft form in the proposed regulation to suggest processing sequences. Submitters or transmitters using the ABI/ACS interface to submit prior notice data to the FDA will be able to make full use of the capabilities of their particular ABI software's automation features. The FDA PN System Interface will permit initial partial data entry and will allow the user to save the information entered until all data are available for submission. The FDA PN System Interface is designed to accept ''header'' information that will permit repeated information to be automatically entered. This ''header'' would contain information consistent across several articles of food within the same submission, *e.g.*, date and time of arrival for several articles of food in one shipment. This will reduce the amount of data entry and potentially reduce typing and transcription errors. FDA has developed the FDA PN System Interface to allow submitters to automatically repeat information already entered in the submission where appropriate (*e.g.*, all information is the same except for the identity of the article or the manufacturer).

The order of information required in prior notice is displayed to best support user input. For example, the first information required is the identification of the submitter and transmitter, if applicable. The next information is the common information that may apply to all articles of food for which prior notice is being submitted at the same time, such as the manufacturer, shipper, carrier, etc. For example, when a manufacturer is identified for the first article of food, the submitter will be able to indicate, using a check box, that the manufacturer is the same for all articles of food in the shipment.

3c. Clarification of Fields

(Comments) A few comments ask for clarification on the meaning of specific fields.

(Response) Elsewhere in this rule FDA sets out the information that must be submitted in a prior notice (see § 1.281). In addition, online help will be available, which will include descriptive information on data fields, and their relationship to other required information and references to the requirements. FDA will also provide a help desk with staff who will answer questions that are not specifically answered by the online help. Information on how to contact the help desk will be available on both the FDA PN System Interface at *http://www.access.fda.gov* and the FDA Web site at *http://www.fda.gov*—see ''prior notice.''

4. Existing System Adequate

(Comments) Several comments suggest that the regulations proposed were unnecessary and that FDA already had the data required, so prior notice would not provide any additional security. These comments conclude that the proposed regulation is therefore functionally redundant.

(Response) Congress mandated prior notice when it enacted the Bioterrorism Act. FDA disagrees with the assertion that prior notice will not provide any additional security because similar information about food is already available. Current systems do not provide all of the information required by the Bioterrorism Act. Nor do they ensure that FDA is provided with the required information before arrival, as required by Congress when it passed the Bioterrorism Act.

5–11. Description of the Prior Notice Submission Systems

Prior notice submission and electronic review will be accomplished through several new or enhanced components of FDA's and CBP's existing electronic systems.

a. *ABI/ACS interface.* The existing ABI/ACS interface, which sends data from customs brokers or self-filers through ACS to OASIS, will be enhanced to support the prior notice requirement. For customs brokers or

self-filers providing prior notice as part of their CBP entry through the ABI/ACS interface, the process for submission and response will be similar to the current process for submitting entry information about FDA-regulated products. A customs broker or self-filer will enter and transmit the information currently required in a CBP entry, along with any additional information required in prior notice, using the software that currently supports submission of data through the ABI interface. (Changes will be required to the existing software to support the additional information required in the prior notice.) As it does currently, ACS will validate the submission to ensure that data required by CBP and FDA is entered. The existing validation will be enhanced to include validation of some prior notice information. If errors or deficiencies are found, the transmission will be rejected and the customs broker or self-filer can resubmit after correcting the errors or deficiencies.

Once ACS determines a submission is valid, the prior notice information and other data will be transmitted to OASIS. OASIS will perform additional data checks and validations. Validation is the process by which the data are checked for completeness and self-consistency by the system. It is a rapid process that does not include screening the data for potential public health concerns. That screening occurs after data validation. If the submission is determined to be facially valid, FDA will transmit a message through ACS to the customs broker or self-filer. The message will provide the Prior Notice Confirmation Number (PN Confirmation Number), which verifies that the prior notice has been confirmed by FDA for review.

If errors are found, OASIS will reject the submission and generate a message(s) identifying where the error occurs. No PN confirmation number will be issued. After the customs broker or self-filer is notified of the errors, the customs broker or self-filer can correct the errors and resubmit the entire entry using the same entry number through the existing CP transaction process (which is the existing transaction for brokers or self-filers to resubmit FDA-specific data through ACS). This process only allows FDA-specific data to be corrected for resubmission, and not CBP-specific data.

A new ABI/ACS-OASIS interface, modeled after the existing process, will be available to submit prior notice for an article of food entering the United States as an IT or T&E entry, or an FTZ admission. This new transaction will not require all of the information currently submitted to CBP at the time a consumption entry is filed, but will require complete prior notice information. Processing of these prior notices will be similar to that described for consumption entries. However, prior notice will be submitted by a new transaction type that will require only the information needed for prior notice and to support messages to CBP regarding the adequacy of the prior notice.

If CBP entry is later filed, the PN Confirmation Number for the article must be entered as an affirmation of compliance for OASIS purposes as evidence that prior notice for the product was submitted and confirmed before arrival. Depending on the capabilities of a customs broker's or self-filer's software, a copy of the ABI Cargo Release Summary will also show that the prior notice has been received, though not necessarily confirmed, by FDA.

The following list identifies the types of entries, with accompanying CBP description, for which prior notice may be submitted through ABI/ACS at the submitter's option:

''Consumption entries''—products entered for use or consumption in the United States;

''Warehouse entries''—products subject to duty but for which payment of duties is deferred. Merchandise entered into a warehouse may be stored, repacked, cleaned, manufactured, smelted, refined, or sold for export. Food must remain in the warehouse until withdrawn for consumption in the United States (and any applicable duty paid);

''IT entries''—in-bond transportation entries for merchandise that arrives at a Customs port of entry but is transported without appraisement to another Customs port of entry where it may be entered for consumption or warehouse, admitted into a FTZ or may be the subject of another transportation entry;

''T&E'' entries''—in-bond transportation entries for merchandise which arrives at a Customs port of entry and is to be transported without appraisement through the Customs territory and then exported; and

''FTZ admissions''—are for merchandise to be used in manufacturing or exhibition or to be manipulated in a FTZ. Merchandise admitted into the zone is not subject to the payment of duties. Merchandise may be withdrawn from the zone for consumption, warehousing, or exportation. There are various categories of merchandise in a zone.

b. *FDA PN System Interface.* The new FDA PN System Interface will be available for international mail and other transactions that are not accepted by ABI/ACS, food refused under section 801(m) of the FD&C Act, and those who choose not to submit prior notice through ABI/ACS. The FDA PN System Interface is available at *http://www.access.fda.gov.* FDA expects that less than 10 percent of transactions will be routinely submitted through the FDA PN System Interface. We estimated the number of informal entries that are not currently captured by ABI/ACS and international mail submissions based on discussions with CBP.

The FDA PN System Interface will allow the user to view and print a prior notice confirmation, including a PN Confirmation Number, the time the prior notice was confirmed, and a record of the information received and validated by FDA.

To submit prior notice information electronically by the FDA PN System Interface, the transmitter must establish a prior notice account. FDA's Unified Registration and Listing System (FURLS) at *http://www.access.fda.gov* will manage the issuance of user accounts for both food facility registrations and prior notice submissions. FURLS will be available 24 hours a day, 7 days a week, and will provide end-users access to the systems. After successfully logging in using the account password, FURLS will pass the user account credentials to the FDA PN System Interface. If the transmitter has not established a prior notice account, the transmitter will be directed to establish a prior notice account the first time he or she accesses the FDA PN System Interface. Subaccounts can also be created, at the discretion of the primary account, to allow more than one person associated with a prior notice to access the prior notice information.

A submitter or transmitter who elects to use the FDA PN System Interface will enter information online, using a series of screens designed to lead the submitter through the prior notice submission process. Data will be subject to the same validation criteria used in the ABI/ACS–OASIS interface, but the validation will be performed on-line, in real time. When the prior notice submission has been validated, the transmitter will receive a message showing that the prior notice has been received by FDA for review and accepted as facially complete. This message will include a unique PN Confirmation Number as well as the date and time of the submission and confirmation. The message will confirm that the prior notice is facially complete and has been received by the FDA for review. Capability will also be provided

to get a hard copy printout of the prior notice submission and a confirmation for verification upon arrival of the article of food, if needed.

If the prior notice was submitted through the FDA PN System Interface, this confirmation number must accompany the article of food when it arrives at the port of arrival. For food arriving by international mail, the PN Confirmation Number received from the FDA PN System Interface must be entered on the ''Customs Declaration—CN22 and CN23'' supplied when the article is mailed. When food subject to this subpart is carried by or otherwise accompanies an individual, the individual must have the PN Confirmation Number, as well. The number will provide CBP and FDA personnel at the border with the means to connect to the results of the FDA review of the prior notice information.

Receipt of a PN Confirmation Number is evidence only that a prior notice has been received for FDA review. Should the FDA review process determine that an article of food should be inspected, personnel at the border will examine the food.

Prior Notice covering a refused food (no prior notice or inaccurate prior notice) must be submitted through the FDA PN System Interface. In addition to prior notice information, the FDA PN System Interface will be used to inform FDA of the port or secure storage location where refused food is or will be held.

12. FDA Review

The FDA prior notice review process will operate 7 days a week, 24 hours a day to review prior notice submissions transmitted through both ABI/ACS and the FDA PN System Interface. This process begins with an automated screening process. If additional evaluation of the prior notice information is necessary, FDA headquarters staff, operating 24 hours a day, 7 days a week, will review the information and may initiate an examination by FDA or CBP of the article of food at the port of arrival, or in the case of rail shipments, within the confines of the closest appropriate examination site. The review process is and manual review by FDA staff. It will be designed to identify food products that may pose serious risks to public health so that appropriate action can be taken upon arrival in the United States. The review process is not impacted by the method of electronic submission. The results of this process will be transmitted to CBP.

The existing OASIS screening and FDA staff review and examination processes will determine admissibility under section 801(a) of the FD&C Act. Thus, food that has not been refused after review and/or examination of the prior notice information may be subject to further inspection and sampling at an inland destination for determination of admissibility under section 801(a) of the FD&C Act.

13. Summary of the Interim Final Rule

The interim final rule requires that prior notice be submitted electronically to FDA. All prior notice information must be submitted in the English language except an individual's name, the name of a company, and the name of a street may be submitted in a foreign language. All information, including these items, must be submitted using the Latin (Roman) alphabet. The prior notice may be submitted through ABI/ACS or the FDA PN System Interface at *http://www.access.fda.gov.* Prior notice must be submitted via the FDA PN System Interface for articles of food imported or offered for import by international mail or other transaction types that cannot be made through ABI/ACS and articles food that have been refused under section 801(m)(1) of the FD&C Act.

The interim final rule, in § 1.279(b) through (d), also sets out how we will handle prior notice in four ''down-time'' situations: The customs broker's or self-filer's access to ABI/ACS is not working; the ABI/ACS interface is not working; the FDA PN System Interface is not working; and OASIS is not working. In all these situations, an alternative form of prior notice information is required. If access to ABI/ACS is not available or if the ABI/ACS interface is not working, prior notice must be submitted via the FDA PN System Interface. If FDA determines that FDA PN System Interface is not working, prior notice may be submitted manually by those who do not use ABI/ACS. If FDA determines that OASIS is not working, all prior notices must be submitted manually. FDA will issue notification through notices on the FDA Web site at *http://www.fda.gov,* at *http://www.access.fda.gov* and through messages in ABI/ACS. Once FDA issues this notification, prior notice information must be submitted to FDA by e-mail or by fax. Hand delivery of hard copy to FDA is not allowed. The location for receipt of submission by e-mail or fax is listed at *http://www.fda.gov—see* ''prior notice.''

H. ''What Information Must Be in a Prior Notice?'' (§ 1.281 Proposed as § 1.288)

Proposed § 1.288 listed the information that was to be included in each prior notice. Part of the information was taken directly from section 801(m)(1) of the FD&C Act. The remainder of the list consisted of information that FDA and CBP have determined is necessary to ensure that we can enforce section 801(m) of the FD&C Act's prior notice requirements as intended by Congress. This additional information is thus authorized under section 701(b) of the FD&C Act (21 U.S.C. 371(b)). In the proposed rule, we explained why each of these items was necessary for the efficient enforcement of section 801(m) of the FD&C Act.

(Comments) Generally, comments assert that the proposed rule required too many data elements. Some comments state that the required information is more than that necessary to facilitate inspection; is burdensome on industry; and is more information than that authorized by the Bioterrorism Act, particularly with regard to product identity, port of entry, and identification of parties involved in prior notice. One comment argues that the prior notice was intended by Congress only to aid FDA in its efforts to ensure the security of the food supply, not to enhance compliance of imported food with all applicable FD&C Act requirements.

(Response) FDA agrees with many of these comments. Accordingly, the interim final rule will not require submission of the following information:

- Telephone and fax numbers and e-mail addresses for most firms;
- Registration numbers, except for the manufacturer and shipper, if otherwise required by section 801(l) of the FD&C Act;
- Entry line numbers;
- Brand or trade name;
- CBP port of entry;
- Anticipated date of entry for CBP purposes; and
- The identities of multiple carriers.

FDA has also revised the following information requirements to make them less burdensome:

- Quantity;
- Lot/code identifier;
- Manufacturer; and
- Grower.

Finally, FDA has added the following information requirements due to the changes in timeframe, the need to coordinate with CBP, and in response to comments:

- The mode of transportation; and
- Planned shipping information, including the 6-digit HTS code.

FDA does not agree that section 801(m) of the FD&C Act is limited to ''food security.'' The purpose of the Bioterrorism Act is ''[t]o improve the ability of the United States to prevent,

prepare for, and respond to bioterrorism *and other public health emergencies.*'' (Pub. L. 107–188 (emphasis added)). Title III of the Bioterrorism Act is titled, ''Protecting the *Safety* and Security of the Food and Drug Supply.'' (Pub. L. 107–188 (emphasis added)). Indeed, when reviewing prior notices that have been submitted after a food has already been refused for lack of adequate prior notice, Congress explicitly directs FDA to determine if it has in its possession any ''credible evidence or information indicating that such article present a threat of serious adverse health consequences or death to humans or animal,'' (section 801(m)(2)(B)(ii) of the FD&C Act). This standard is a health-based standard and is not limited to intentional acts of contamination.

For clarity, the interim final rule also has segregated the information requirements for food imported or offered for import by international mail as new § 1.281(b) and the information requirements for food refused under section 801(m) of the FD&C Act as new § 1.281(c).

1. Registration Numbers

(Comments) Comments note that the submitter may not know the necessary registration numbers and recommend that FDA confirm the registration numbers within its system. A comment reasons that, because FDA will have access to the contact information in its facility registration database, FDA should only require the registration number rather than the name, address, telephone number, fax number, and e-mail address to reduce the burden on submitters. Another comment states that it would be impossible to provide the FDA registration numbers of all operators that have handled the imported food and questions FDA's need for the registration numbers because the ''one up, one down'' recordkeeping provision added to the FD&C Act by section 306 of the Bioterrorism Act is sufficient to help FDA take appropriate steps. Other comments express concern about the confidentiality of registration numbers, *i.e.,* they may be denied access to the registration number or be unable to verify it. Other comments state that an importer who imports returned U.S. goods has no direct relationship with the U.S. manufacturer and therefore assert that these importers cannot obtain the registration number.

(Response) Registration of facilities that manufacture/process, pack, or hold food for consumption in the United States is required by new section 415 of the FD&C Act, which was added by section 305 of the Bioterrorism Act. FDA does not believe that the statute gives FDA authority to waive the registration requirement for facilities that manufacture/process, pack or hold food for consumption in the United States. The one instance when not providing a registration number may be appropriate is when the manufacturer is out of business or registration no longer is appropriate because the manufacturer has ceased making food products under FDA's jurisdiction.

If such a food is refused because of inadequate prior notice for failure to provide a registration number, or if the food is held under § 1.285(b), you may request an FDA review under § 1.285(j). As part of your request, you should provide FDA information to show that the facility associated with the food is out of business or inactive.

Registration is designed to work in concert with prior notice at the border, as reflected in new section 801(l) of the FD&C Act, which provides that food from facilities that must register may not be admitted into distribution for consumption in the United States unless the relevant facilities have been registered. To enforce section 801(l) of the FD&C Act as intended by Congress, FDA has determined that it must review registration status of manufacturers and shippers as part of prior notice. The information provided by registration will allow FDA to check prior notice submissions against registration data to confirm the identity. Moreover, the information provided by prior notice submissions can serve as a crosscheck as to whether these firms are registered as required and have provided the necessary updates. FDA thus believes that prior notice and registration will work in tandem to provide FDA with information about the article of food and a facility involved in its production and distribution that will inform and improve our risk-based border inspection decisions, as well as our later admissibility determinations.

FDA does not agree that it should confirm registration without requiring that the number be submitted. Each registered facility will be assigned a unique registration number by FDA. Thus, the registration number will help identify the manufacturer. Without a registration number, it may be difficult to determine exactly which registered facility to associate with the article: Different firms may have the same or similar names and more than one firm may operate from a particular location. In addition, requiring the registration number as part of manufacturer identity makes it clear to foreign exporters and U.S. importers from the outset when registration is required for imported food.

FDA does not agree that the registration number, when one is required, is sufficient by itself to ''identify'' a person in a prior notice submission. The additional information is needed to verify that the registration number is accurate. For example, without additional information, there is a significant possibility of typographical errors, leading to misidentification of facilities, which could lead to foods being stopped at the border for inadequate prior notice and registration. FDA is requiring identifying information in addition to the registration number (if one is required) to reduce the number of clerical or typographical errors in registration information that could result in refusals. The FDA PN System Interface will require the firm name and at least the city and country as ''confirmatory information,'' in addition to the registration number to allow for validation. (If registration is not required for the facilities associated with a particular article of food, a registration number may still be provided, along with the name of the facility and the city and country. If a registration number is not required and the submitter chooses not to provide the number voluntarily, the name and full address of the facility must be provided to ensure that FDA can fully identify the correct party.)

Finally, the systems will not automatically fill in the registration number on any documents or electronic screens that are provided to, or appear, to the submitter or transmitter.

To minimize the burden, the interim final rule only requires registration numbers for shippers (if the shipper is a facility required to register for that article of food) and the manufacturer. The interim final rule also states when a registration number is not required in a prior notice for these persons. Under section 415 of the FD&C Act, registration is only required for food for consumption in the United States. Thus, the interim final rule does not require that a prior notice include registration numbers of facilities associated with articles of food that are imported or offered for import for transshipment, storage and export, or further manipulation and export. The interim final rule does not require a registration number for the manufacturer if the article of food is sent by an individual as a personal gift (*i.e.*, for non-business reasons) to an individual in the United States.

2. Fax & E-mail Addresses

(Comments) Some comments state that the fax number and e-mail address should be optional.

(Response) FDA agrees, in part, and has eliminated the requirement for telephone and fax numbers and e-mail addresses in many instances. In the interim final rule, the telephone and fax numbers and e-mail addresses (if they exist) are only required for submitters and transmitters so that FDA can communicate with them, if necessary. The prior notice submission must declare if these persons do not have a telephone number, fax number, or e-mail address.

3. Submitter and Transmitter (§ 1.281(a)(1) and (a)(2) Proposed as § 1.288(a))

The proposed rule required the identity of the submitter and the associated submitting firm.

(Comments) Comments addressing the submitter focused primarily on who is authorized to submit prior notice and on the need for registration numbers and fax and e-mail information.

(Response) Comments regarding who may submit, as well as comments regarding registration numbers and telephone, fax, and e-mail information already have been addressed.

As explained in the proposal, the identification of the submitter is needed so that FDA knows who is responsible for the information in the prior notice and can communicate with them when necessary. The information is also necessary to follow up when audits, inspections, or enforcement are necessary.

The FDA PN System Interface will allow the information transmitted for identification of the submitter to be automatically repeated in the same submission if the submitting firm is also any other firm identified in the prior notice, such as the transmitter, importer, owner, ultimate consignee, etc. This ability to automatically repeat information may also be available for transmitters submitting prior notice through ABI/ACS, depending on the features of the ABI software package used by the transmitter.

(Interim final rule) Section 1.281(a)(1) requires submission of the name of the individual submitting the prior notice, *i.e.,* the submitter, and his or her business address, and telephone number, fax number, and e-mail address (if they exist), as well as the name and address of the submitting firm associated with the submitting individual, if it exists.

4. Transmitter (§ 1.281(a)(2))

The proposed rule allowed an agent to provide prior notice.

(Comments) Comments on the use of agents to provide prior notice are discussed under § 1.278.

(Response) Responses to comments on the use of agents are discussed under § 1.278.

(Interim final rule) If the prior notice is transmitted by a person other than the submitter, § 1.281(a)(2) requires the name of the individual transmitting the prior notice, *i.e.,* the transmitter, on behalf of the submitter and his or her business address, telephone number, fax number, and e-mail address, if they exist. The submission must also include the name of the firm associated with the individual transmitting the prior notice information, if it exists. The identification of the transmitter is needed so that FDA may confirm the prior notice, communicate regarding the prior notice after FDA review, and followup when audits, inspections, or enforcement are necessary.

5. CBP Entry Type (§ 1.281(a)(3) Proposed as § 1.288(b))

The proposed rule required the submission of the Customs entry type associated with the article of food being imported or offered for import (proposed § 1.288(b)).

(Comments) Comments state that the CBP entry type is not always available by noon of the day before arrival. They also note that entry type may change depending on quota status, *e.g.,* where a consumption entry was planned but then was changed to a warehouse entry because an entry quota on the product was temporarily filled or closed.

(Response) FDA and CBP believe that the significant shortening of the prior notice timeframe resolves many of the concerns about the availability of the CBP entry type. As discussed in the proposed rule, FDA needs this information for screening to identify the appropriate articles for inspection. It is also needed for communication with FDA and CBP staff at the border. Also, entry type determines which entry identifiers should be used (entry number, in-bond number) to identify the shipment. In addition, the CBP entry type tells us if the article of food is for consumption in the United States or is for export or other uses that, in turn, allows FDA to determine that certain information is not required (*e.g.,* registration numbers).

(Interim final rule) Section 1.281(a)(3) of the interim final rule requires submission of the entry type. Some examples of entry types are listed as follows: Consumption entries, warehouse entries, and temporary importation bond entries. Each of these types has a designated CBP code. For prior notice submissions made through ABI/ACS, the entry type will consist of the CBP entry code specific for that type of entry, *e.g.,* ''01'' for a consumption entry, ''21'' for a warehouse entry, ''23'' for a temporary importation bond entry, *etc.* These codes are ones customs brokers and self-filers currently provide to CBP at entry. For prior notice submissions made through the FDA PN System Interface, applicable entry types or other admission categories will be provided for selection in a drop-down menu, *e.g.,* consumption, IT, T&E, mail, FTZ, *etc.* Explanations of the different entry types or other admission categories will be available to help the transmitter choose the right one.

6. ACS Entry Line Number or Other Customs Identification Number (§ 1.281(a)(4) Proposed as § 1.288(c))

The proposed rule required the identification of the CBP entry number, the CBP ACS line number and the FDA line number. FDA explained that this information is necessary for screening and identification of the appropriate articles for inspection, as well as for matching the prior notice to the corresponding CBP entry to assess the adequacy of the prior notice when shipments arrive and are presented for review.

(Comments) Comments state that the CBP entry number is available only from a customs broker or self-filer, but not every import has a broker. Other comments state that the entry number is not assigned until the customs broker or self-filer transmits entry information through the ABI to ACS. Thus, the entry number is not available by noon of the day before arrival. Other comments state that entry and line numbers are not available earlier than 4 hours before arrival at land ports. Some comments suggest that FDA make this information voluntary.

(Response) FDA agrees in part and has removed the requirement for submission of line numbers. The interim final rule only requires submission of a CBP entry identifier. FDA believes that the entry identifier is necessary for proper identification of the information in a prior notice with the appropriate articles for inspection. FDA also believes that submission of the entry identifier is critical for matching the prior notice to the corresponding CBP entry, which is necessary to assess the adequacy of the prior notice when shipments arrive and are presented for review. For in-bond entries and FTZ

admissions, and for prior notices submitted through the FDA PN System Interface, an entry identifier is critical for matching the prior notice to the corresponding CBP entry if a consumption entry is submitted so FDA and CBP can ensure that prior notice requirements were satisfied. For transmitters submitting prior notice with CBP entry information through the ABI/ACS interface, the CBP entry number assigned by CBP is also the entry identifier. For customs brokers or self-filers submitting prior notice for a food entering the United States as an IT entry, a T&E entry, or FTZ admission, the CPB in-bond number or FTZ admission number assigned by CBP is also the entry identifier.

If prior notice is being submitted through the FDA PN System Interface, the entry identifier will depend on the entry type and the reason for Web submission. If available to the transmitter (*e.g.,* the prior notice is for a CBP entry but the ABI/ACS interface is not available), the CBP entry number must be used. Where appropriate, the in-bond number must be used as the entry identifier. If one of the entry identifiers described above does not exist, the transmitter can request a system-generated entry identifier. The FDA PN System Interface will provide online help to assist the user in determining what information to use as the entry identifier for a specific transaction.

This requirement to provide an entry identifier does not apply to articles of food imported or offered for import by international mail, nor those carried by or accompanying an individual, unless entry is otherwise required by CBP and an associated CBP entry identifier has thus been assigned. In these cases, the FDA PN System Interface will apply a system-generated entry identifier.

FDA agrees with the comments that line numbers are not necessary. Thus, the interim final rule does not require submission of a line number. For transmitters using the FDA PN System Interface, the system will assign each article of food a unique number for processing and, after validation, a PN Confirmation Number will be returned for each article of food. For ABI/ACS submissions, when they are confirmed, the CBP and FDA line numbers will be assigned as they are under current procedures, and the customs broker or self-filer will receive a confirmation number for each line through the OASIS/ACS messaging process.

7. Product Identity (§ 1.281(a)(5) Proposed as § 1.288(e)(1))

Section 801(m)(1) of the Bioterrorism Act states that a prior notice must contain the identity of the article of food being imported or offered for import. To ensure that each prior notice adequately and completely identifies the food being imported or offered for import, § 1.288(e)(1) of the proposed rule required the submission of the following information: FDA product code; common, usual, or market name; brand name; quantity; and lot, code, or other identifying number.

a. *General comments on product identity.* (Comments) Some comments ask that FDA obtain product identity information from existing Customs information. Other comments believe that the information on product identity should be limited to a general description of the product.

(Response) Under section 801(m) of the FD&C Act, FDA must have the information before arrival. Thus, although product identity is provided to CBP when entry is filed, currently that does not generally occur sufficiently before arrival for FDA to review and respond as envisioned by the Bioterrorism Act. Under the interim final rule, with the modifications to ABI/ACS, required product identity information can be provided through ABI/ACS. The transmission to CBP will be enhanced to include the additional product identity information required by prior notice, and will be used satisfy both FDA's prior notice requirements as well as current entry requirements.

FDA does not agree that product identity should be limited to a general description. For prior notice to accomplish its intended purpose and help FDA protect American consumers, a precise description of the product is necessary. For example, FDA needs to know that there are 100 cartons containing 24/12 ounce (oz) bottles of apple juice and 200 cartons containing 48/8 oz bottles of apple juice to make its decision whether to inspect, sample, or hold a shipment. Information about potential contamination may apply only to 8 oz bottles of apple juice. Therefore, it would be a drain on FDA resources, as well as cause delays at the border, to examine and sample all juice or all apple juice imports when only one kind of juice in one kind and size of packaging is affected. Currently, this information is provided to FDA when entry information is submitted via the ABI/ACS interface by a customs broker or self-filer. For those entries submitted via a paper mode, the invoice is included in the submission, as it was before OASIS and ABI/ACS. The precise description of a food product is commonly included on a commercial invoice, *e.g.* 200 cartons of 24/6 oz cans of albacore tuna.

(Comments) One comment asks for clarification as to how an ''article'' of food is defined.

(Response) The description of an ''article'' of food is not the same as the definition of ''food'' in § 1.276(b)(5). An ''article'' refers to a single food that is associated with the same complete FDA Product Code, the same package size, and the same manufacturer or grower. These requirements are found in the information required in the interim final rule in § 1.281(a)(5), (a)(6), or (a)(7) and again in § 1.281(b) and (c).

(Comments) Some comments assert that the proposed rule increases the paperwork burden by requiring separate notices for every article from a different manufacturer or grower. Comments recommend that one way to reduce this burden would be to allow a single prior notice to cover a shipment of multiple articles of food or allow one notice per shipment.

(Response) FDA disagrees. An article of food is a unique item related to a specific manufacturer or grower and a specific process or size. All of these pieces of information are critical for a risk-based assessment of the food. FDA currently receives most of this information from customs brokers or self-filers via ABI/ACS. The ABI/ACS system also provides the capability to submit information for multiple food items as lines in a single entry, when entry level information is consistent for a number of articles in a shipment. For example, shipment level information, such as estimated time of arrival, can be captured once for all articles within a shipment. The ability to minimize data entry by copying specific information from one article, or line, to another depends upon the sophistication of the software being used to create the submission to CBP. The FDA PN System Interface is designed to allow for simplified submission of similar articles of food by allowing the submitter to easily repeat common information (*e.g.*, FDA product code, manufacturer, etc.) while entering different quantities (*e.g.*, amount and package size). Both systems will thus significantly reduce the amount of repetitive entry of information while preserving the identity of each article of food.

b. *Complete FDA product code (§ 1.281(a)(5)(i) Proposed as § 1.288(e)(1)(i)).* FDA proposed to require the submission of the complete FDA product code as an element of the identity of the product (§ 1.288(e)(1)(i)).

The FDA product code is a unique numeric code currently used by FDA and customs brokers and self-filers to describe food products, as well as other products regulated by FDA.

(Comments) The majority of comments emphasize the need to use the existing and familiar HTS coding structure for product reporting instead of the FDA product code. Some comments ask FDA to update product codes with current food items, such as botanicals, additives, food contact substances, etc. Some comments state that the importer might not know the exact product they will be receiving until the product is shipped and, therefore, may not know the FDA product code by noon of the day before arrival. One comment recommends clarification of what the FDA product codes are and where they can be found. In addition, another comment was not able to access the FDA product database and urges FDA to correct this situation. Finally, one comment suggests that FDA eliminate this data element.

(Response) The FDA product code is an existing 7-character code that describes a product for FDA purposes by industry type and class, packaging, process, and specific distinctive character. For example, canned tuna is covered by FDA Product Code, 16AEE45. ''16A'' describes the product as vertebrate fish, the first ''E'' describes the metal package, the second ''E'' describes a commercially sterile process, and ''45'' describes the fish as tuna.

Although the HTS codes are currently utilized by CBP and FDA to identify generally which imports are subject to an FDA admissibility review, these codes are often not sufficient to specifically identify a product for FDA decisionmaking. For example, in many cases, the tariff code does not describe how the product was processed (*e.g.*, commercially sterile or shelf-stable) or how the product is packaged. For example, milk and cream are included in the same codes. These codes differentiate milk and cream for fat content, but do not indicate the process (pasteurization and refrigerated or commercially sterile) or packaging (cardboard carton, plastic bottle, or shelf-stable package). Thus, several products that FDA considers different from each other (because these differences affect the potential safety of the food) may be combined under one tariff number HTS code.

Both the HTS code and the FDA product code are currently required on FDA-regulated products and are submitted through the ABI/ACS interface. Therefore, the FDA product code is familiar to most of those who will be transmitting prior notice. The FDA product code is currently available via the Internet at *http://www.accessdata.fda.gov/scripts/ora/pcb/pcb.htm* as a ''buildable'' code.

FDA is requiring submission of this data element for prior notice as an integral part of the identity of the article. Risk-based screening criteria can be very specific. Therefore, the specificity provided by the FDA product code is necessary. In addition, the timing requirements for submitting prior notice have been decreased significantly. Therefore, the issue of adequately identifying the product code at the time of submission has been reduced to the extent possible, given the mandate from Congress to require prior notice.

The FDA PN System Interface has a menu-driven FDA product code builder that enables the submitter to appropriately describe the product. The FDA PN System Interface is also designed to allow a submitter who already knows the product code to enter it directly.

FDA routinely and continually updates the FDA product codes and product code builder electronic files to include more specific food items, such as additives, exotic produce, and some botanicals. FDA intends to issue guidance before the effective date of this rule that will provide the flagged HTS codes and FDA product codes identifying foods for which prior notice is required. This guidance will be posted at *http://www.fda.gov*, see ''prior notice.''

(Interim final rule) Section 1.281(a)(5)(i) requires the complete FDA product identity code for the article of food covered by a prior notice. The interim final rule allows for submission of product identity information through ABI/ACS. Customs brokers or self-filers, using ABI/ACS, currently may use the FDA product code builder, which is available to the public on the FDA Web site, to identify the appropriate product code. Those submitting prior notice through the FDA PN System Interface will be able to access a FDA product code builder specific to those food covered by the prior notice requirement.

c. *Common, usual or market name (§ 1.281(a)(5)(ii) Proposed as § 1.288(e)(1)(ii)).* FDA proposed to require the submission of the common or usual or market name of the article of food as an element of the identity of the product (§ 1.288(e)(1)(ii)). The customs broker or self-filer currently submits the common or usual or market name to ABI/ACS when entry is made, and it subsequently is transmitted to OASIS for each entry line, *e.g.*, article of food.

(Comments) One comment is concerned that the appropriate name of fresh produce or fishery products may not be known at the time of shipment.

(Response) This information is necessary to confirm the accuracy of the product code and we have thus retained the requirement to submit it in the interim final rule. The timing requirements for submitting prior notice have been decreased significantly. Therefore, the issue of adequately identifying fresh produce and ''catch of the day'' at the time of submission has been reduced to the extent possible, given the mandate from Congress to require prior notice.

(Interim final rule) Section 1.281(a)(5)(ii) requires that the submitter supply the common or usual or market name in a prior notice. (See 21 CFR 102.5 for additional information about common or usual names.)

d. *Trade or brand name (Proposed § 1.288(e)(1)(iii)).* FDA proposed to require the submission of the trade or brand name of the article of food, if it is different than the common or usual or market name, as an element of the identity of the product (§ 1.288(e)(1)(iii)).

(Comments) Comments ask for clarification as to why this information is required when the statute does not require it and the information will likely be confusing if provided. Commenters also recommend eliminating this data element. Comments state that some imported products do not have a trade or brand name (*e.g.*, agricultural products, fish, and seafood). In addition, comments note that a single product could have multiple brand names. Several comments note that the importer usually does not know a product's brand or trade name. Comments also recommend that FDA clarify in the final rule that it will not reject an article of food for failure to include trade or brand name when such information does not exist.

(Response) FDA agrees with the comments. FDA has also determined that this information is not critical for risk-based screening, given the other information in a prior notice.

(Interim final rule) FDA has eliminated the requirement to identify the trade or brand name in the interim final rule.

e. *Quantity (§ 1.281(a)(5)(iii) Proposed as § 1.288(e)(1)(iv)).* FDA proposed to require the submission of the quantity of food described from smallest package size to largest container as an element of the identity of the product (§ 1.288(e)(1)(iv)). The number of

container units and units of measure are to be submitted in decreasing size of packing unit (starting with the largest). The customs broker or self-filer currently submits the quantity of each line entry to ABI/ACS when entry is made, and quantity subsequently is transmitted by CBP to OASIS. FDA requested comments on whether changes in quantity will occur after the deadline for prior notice and, if so, how commonly changes occur and how significant the changes usually are.

(Comments) There were many comments pertaining to quantity. Some commenters object to the requirement, stating that it can be difficult to identify quantity. For example, comments suggest that it can be difficult to identify quantity for processed goods, as quantity may change. Also, the exact quantity is difficult to identify for fresh produce and fresh fishery products due to the fast-paced shipping of perishables and day-to-day harvesting differences. Comments state that it is also difficult to ascertain the exact unit (*e.g.*, weight, volume) for bulk items. Comments also state that quantity information such as package size is not relevant to identify the presence of intentional contamination or a food safety hazard. Some comments object to the level of specificity, stating that the required quantity data is unduly detailed for inspection purposes, seldom needed for risk assessments, and not necessary to meet the statutory requirements. Other comments recommend that FDA allow a 2-hour amendment/update for needed flexibility and accurate reporting or adopt a percentage over/under discrepancy tolerance or approximated total units (*e.g.*, weight, volume). Comments confirm that changes in quantity occur after the proposed deadline for prior notice and that these changes commonly represent significant variations in quantity.

(Response) FDA continues to believe that quantity is a necessary component of product identity. The significant decrease in the filing deadlines addresses concerns raised by many comments. In addition, in further response to the comments on changes in quantity, FDA has revised the requirement to ''estimated quantity.'' This means that the submitter must tell FDA, at the time of submission of Prior Notice, the estimated amount of the article of food that they anticipate will be shipped. This change provides importers with leeway to adjust shipments, while still ensuring FDA has useful information about overall quantity.

FDA believes that package size is necessary and part of product identity. The base unit of measure is a critical characteristic of product identity and is thus necessary for effective review of the prior notice information. Base unit is critical to processing safety requirements and is particularly important when evaluating the safety of low-acid canned foods. Both base unit and total quantity (which includes knowing the smallest ''package size'') are necessary for response (examination) and communication with FDA and CBP staff at the border. As noted in FDA's ''Food Security Preventive Measures Guidance for Importers'' (Ref. 17), they are also critical for food security examinations to determine if the amount ordered is the amount received. For example, if more was received than was ordered, the guidance recommends an investigation to determine the cause of the discrepancy as additional and unwanted articles may have been added to intentionally contaminate the shipment. If less product is received than ordered or than shipped, some of the product may have been intentionally diverted. Both base unit and total quantity are currently data elements that can be submitted via ABI/ACS to OASIS. The tutorial in the FDA product code builder will be revised to recommend the appropriate association of base unit with product code, *e.g.*, FDA Product Code 16AEE45, canned tuna would recommend the base unit as **oz cans.

(Interim final rule) Section 1.281(a)(5)(iii) requires that the prior notice state the estimated quantity of food that will be shipped from largest container to smallest package size. Some examples of quantity descriptions are: 100 cartons of 48/6 oz cans each of tuna; 100 pallets of 2/100 pound (lb) totes each of frozen tuna loins for a total of 20,000 lb; 100 pallets of 2/100 lb cartons each of dehydrated pig ears for a total of 20,000 lb; 100 cartons of 20 lb of fresh watermelons each carton for a total of 2,000 lb, and 2,000 lb of wheat in bulk. A prior notice will not be inadequate if the estimated quantity changes between the confirmation of prior notice and the time of arrival. The interim final rule does not require that a prior notice be cancelled and resubmitted if the estimated quantity changes after confirmation.

f. *Lot or code numbers or other identifier (Proposed § 1.288(e)(1)(v)).* FDA proposed to require the submission of the lot or code numbers or other identifiers that are specific to the article of food, if applicable, as an element of the identity of the product (proposed § 1.288(e)(1)(v)). Currently, when entry information is presented to FDA through ABI/ACS, lot or code numbers may be transmitted as ''affirmations of compliance'' and there may be more than one identifier represented in an entry line.

(Comments) Comments state that the addition of lot, code, or other identifier information is burdensome and not valuable for inspection purposes. In addition, often the lot numbers are simply unknown. Comments ask that FDA clarify, if this data element is retained, what ''lot or code number or other identifier'' means and how it should be entered, such as by bar code, letters, or random number. Comments also ask that FDA consider that there is no lot or code number for bulk or commingled products. Many comments suggest that FDA consider making this data element voluntary or removing it completely.

(Response) FDA agrees in part. The lot or code numbers are the identification numbers or code of a production lot, which can more specifically identify a product for screening and examination purposes and for communication within FDA and with CBP and the grower or manufacturer, etc. For example, recalls involving serious health risks are often associated with a specific production lot, such as counterfeit infant formula or underprocessed canned food. FDA screening targets examinations based on information of public health emergencies or recalls in foreign countries. FDA regulations already require lot/code identifiers for some foods. Currently, low acid canned foods, acidified foods, and infant formula are required to bear lot codes or other identifiers (see 21 CFR 113.60(c) (low-acid canned foods); 21 CFR 114.80(b) (acidified foods); and 21 CFR 106.90 (infant formula low-acid canned foods)). The interim final rule requires lot/code or other identifiers only for these kinds of articles of foods. Many other foods may have lot or code identifiers that are not required by FDA regulation; submission of these identifiers is optional under the interim final rule.

(Comments) Some comments object to the limitation in the proposed rule that each lot number of a food would need its own prior notice and asserted that FDA should permit multiple lot numbers to be identified in one prior notice.

(Response) FDA agrees. Multiple lot numbers may be identified for an article of food. The systems are set up to permit such submissions.

(Interim final rule) Section 1.281(a)(5)(iv) provides that lot or code numbers or other identifiers are required in a prior notice for articles of food that are required to bear such numbers by the FD&C Act or by FDA

regulations. Submission of the required lot/code identifier will be accommodated by ABI/ACS as an affirmation of compliance or through the FDA PN System Interface. ACS currently allows for submission of more than one affirmation of compliance per article of food. The FDA PN System Interface will accept more than one lot identifier per article of food.

8. Manufacturer (§ 1.281(a)(6) Proposed as § 1.288(f))

As provided for in section 801(m)(1) of the FD&C Act, FDA proposed to require the submission of the identity of the manufacturer of each article of food. The customs broker or self-filer currently submits the identity of the manufacturer to ABI/ACS when entry is made, and it subsequently is transmitted to OASIS.

(Comments) Some comments state that some foods are not processed or manufactured food, *e.g.*, certain wild-caught or agricultural products; therefore, a manufacturer cannot be identified.

(Response) FDA agrees. Identification of a manufacturer only is required for a food that is no longer in its natural state. The FDA PN System Interface will recognize (by FDA product code) these foods. The manufacturer field must be completed for these foods (identified by FDA product code); if it is not completed, the initial validation will reject the submission through ABI/ACS or the FDA PN System Interface. Guidance regarding FDA product codes that require prior notice, which FDA intends to issue before implementation of this rule, will identify which product codes should be associated with a manufacturer.

FDA also recognizes that if an article of food is sent by an individual as a personal gift (*i.e.*, for nonbusiness reasons) to an individual, what will be available to the sender will be the name and address of the firm that appears on the label. Thus, this information may be supplied and a registration number need not be provided.

(Interim final rule) Section 1.281(a)(6) of the interim final rule requires that the identity of the manufacturer of an article of food that is no longer in its natural state be submitted as part of prior notice. However, if the article of food is sent by an individual as a personal gift (*i.e.*, for non-business reasons) to an individual in the United States, the name and address of the firm that appears on the label under 21 CFR 101.5 may be submitted.

9. Grower, If Known (§ 1.281(a)(7) Proposed as § 1.288(g))

As required by section 307 of the Bioterrorism Act, FDA proposed to require the submission of the identity of all growers of each article, if known, and the growing location if different from the grower's business address (proposed § 1.288(g)). If the submission is amended, the proposed rule required that the identity of all growers must be provided if known at the time of the amendment (§ 1.290(d)).

FDA solicited comments on whether the FD&C Act gives FDA any flexibility to exempt or otherwise treat differently so-called processed foods produced with products from more than one grower. FDA also solicited comments on whether the term ''grower'' includes a harvester or collector of wild products, *e.g.*, some fish and botanicals.

(Comments) A comment states that the agency does not need to identify flexibility to exempt processed foods produced with products from one or more grower, but rather should recognize that there is not a grower of a processed food.

(Response) FDA agrees. Once an article of food, for prior notice purposes, is no longer in its natural state, it has a manufacturer, but not a grower.

(Comments) A commenter states that it is an extremely rare occurrence for any single imported lot of a wild botanical raw material to have been collected by a single collector. Rather, the comment believes that the most common practice of consolidating a single lot of wild-harvested botanical raw material involve the product of many dozen or even hundreds of individual collectors.

(Response) FDA agrees and considers a harvester or collector to be the grower for the purposes of this provision as the definition of grower reflects § 1.276(b)(6)). The interim final rule also allows for the identification of a consolidator, when the submitter does not know the identities of all harvesters or collectors at the time of submission of the prior notice.

(Comments) Comments assert that if the grower is known, then workload for submission of prior notice will increase immensely. The comments recommend submitting a one-time listing of all growers that supply the importing firm with product and the responsible party could update the list as needed or keep a complete grower list with each firm and supply it to FDA when needed.

(Response) The proposed regulation restated the statutory requirement. FDA does not agree that a list would satisfy the statutory requirement, as it would not tell FDA which grower was associated with the particular article of food as envisioned by the statute.

(Comments) Comments state that it is very difficult to identify a grower for commingled products (fresh produce, fishery products, and grain) and such identification is not a typical industry practice. Comments also ask FDA to define ''bulk,'' and specifically how to address this issue with bulk grain.

(Response) There is only one grower per article of food that is not in its natural state. Thus, tomatoes from two different growers are different articles of food offered for purposes of prior notice. However, FDA has decided that if the identity of all growers is not known for an amount of raw agricultural product consolidated from more than one grower, including grain or aquacultured fishery products, the consolidator firm may be identified in the grower identity data field. FDA emphasizes that the submitter may opt to provide the name and address of the firm that has consolidated the articles of food from different growers or different growing locations only when the submitter does not know the identity of any of the growers of the consolidated food. If the submitter knows the identity of any grower for consolidated foods, a separate prior notice must be submitted for each article of food represented by a known grower.

For example, if consolidator X commingles tomatoes from 5 growers into one lot of 90 cartons and the submitter does not know the identities of any of those 5 growers, then the submitter may opt to provide the identity of consolidator X. If consolidator X commingles tomatoes from 3 growers (growers A, B, and C) into one lot of 90 cartons and, although the submitter knows the identities of the growers, none of the tomatoes can be associated with the grower (no grower specific identifier accompanies each carton), then the submitter may opt to provide the identity of consolidator X.

If consolidator X commingles 30 cartons of tomatoes from grower A with 30 cartons of tomatoes from grower B and 30 cartons of tomatoes from grower C and the submitter knows the grower associated with each of those 30 carton lots, then each of those 30 carton lots represents an article of food and a separate prior notice must be submitted for each. However, if consolidator X commingles 30 cartons of tomatoes from grower A with 60 cartons of tomatoes commingled from other growers and the submitter knows the identity of grower A, then that 30 carton lot can be identified by grower and represents an article of food. Two prior notices are

required: The first prior notice would cover 30 cartons of tomatoes and must identify grower A; the second prior notice would cover the remaining 60 cartons, and the submitter may opt to identify consolidator X.

When bulk grains are commingled, they lose their association with each grower and the identity of grain would then be associated with the facility that commingled, *i.e.*, consolidated, the grain in a silo or truck or rail car before shipment. The submitter may opt to provide the identity of this consolidator in the prior notice.

(Comments) Comments suggest that FDA define ''if known'' and provide guidance as to the extent of effort that should be applied to find grower information and what will satisfy ''if known.''

(Response) Section 801(m)(1) of the FD&C Act requires that grower information be submitted (or provided to the transmitter for submission) if it is known. Thus, this information is not optional: If it is known by the submitter, it must be submitted. For purposes of this rule, FDA considers the information to be known if the submitter is aware of or learns the grower name and growing location due to business relationships. FDA is not requiring the submitter to seek out information of which the submitter is not aware. However, if the identity of the grower is in the possession of the submitter (*e.g.*, on documents), we believe the submitter is aware of the identity of the grower.

(Comments) Comments state that if knowing the grower is such crucial information, then it should be made mandatory.

(Response) Because the statute provides the identification of the grower ''if known,'' FDA does not have the authority under section 801(m) of the FD&C Act to require the identification of the grower in cases where that identity is not known to the submitter.

(Interim final rule) Section 1.281(a)(7) requires that a prior notice identify the grower, if known to the submitter for an article of food that is in its natural state. If a food comes from more than one grower, a prior notice must provide for an article of food associated with each grower, if their identity of that grower is known. As stated previously under discussion of product identity, an ''article'' refers to a single food that is associated with the same complete FDA Product Code, the same package size, and the same manufacturer or grower. FDA has determined that identification of the grower and the growing location address is a more appropriate identifier than the address of the grower. Therefore, FDA has revised the interim final rule to require the grower name and growing location. We have eliminated the grower's address. The interim final rule also allows that if the submitter does not know the identity of the grower or, if the article of food has been consolidated, the identity of any of the growers, the submitter may provide the name and address of the firm that has consolidated the articles of food from different growers or different growing locations.

As stated previously under discussion of ''manufacturer,'' the FDA system will recognize (by FDA product code) which products should be associated with a grower and will recognize (by FDA product code) which products should be associated with a manufacturer. Thus, if the manufacturer field is completed for a food that is in its natural state (as identified by FDA product code), the system will not accept the transmission. Guidance, which FDA intends to issue before implementation of this rule, regarding FDA product codes that require prior notice will identify which product codes should be associated with a grower. Submission of prior notice via the FDA PN System Interface will allow for association of ''header information'' with an article of food so that the transmitter would only have to identify list each grower and growing location. Each would be identified with a separate PN Confirmation Number associated with an entry identified. (See description under discussion of lot/code identifier in the previous paragraph in section III.H.7.f of this document.) A similar capability may be possible for submission through the ABI/ACS interface, but that is dependent upon the ABI software used by the broker or self-filer.

10. FDA Country of Production (§ 1.281(a)(8) Proposed as § 1.288(h)—Originating Country)

As provided for in section 801(m)(1) of the FD&C Act, FDA proposed to require the submission of the identity of the originating country of the article of food (proposed § 1.288(h)). This term was defined in proposed § 1.277(c)(2) as the country where the article of food was grown and harvested or if manufactured/processed, where the article of food was produced. It is proposed, that if the article of food is wild fish or seafood and it is harvested in the waters of the United States or by a U.S. flagged vessel or processed aboard a U.S. flagged vessel, the FDA Country of Production is the United States.

(Comments) Comments ask that FDA clarify which country should be identified when the major component of the final processed food may have come from a number of countries. Comments point to blended or decaffeinated coffee or apple juice produced from fresh apples and apple concentrates from more than one country as examples of such foods. Comments also ask that FDA clarify the definition of ''originating country'' to mean the country in which the product was last processed.

(Response) For a food that is no longer in its natural state, the FDA Country of Production is the country where the article of food was made. Therefore, for a food such as decaffeinated coffee or apple juice, the FDA Country of Production is the country in which the facility that made the food is located. For example, if the decaffeinated coffee is produced in Country C by decaffeinating a blend of coffees from Country A and Country B, the FDA Country of Production is Country C.

(Interim final rule) The interim final rule in § 1.281(a)(8), requires that a prior notice contain the FDA Country of Production of the article of food being imported or offered for import into the United States. As set out in its definition at § 1.276(b)(4), the FDA Country of Production is, for an article of food is in its natural state, the country where the article of food was grown, including harvested or collected and readied for shipment to the United States. If, however, an article of food is wild fish, including seafood, that was caught or harvested outside the waters of the United States or by a that is not registered in the United States, the FDA Country of Production is the country in which the vessel is registered. For a food that is no longer in its natural state, the FDA Country of Production is the country where the article of food was made. However, if an article of food is wild fish including seafood, that was made aboard a vessel, the FDA Country of Production is the country in which the vessel is registered. The interim final rule also provides that the FDA Country of Production of food grown and harvested or collected or made in a U.S. Territory is the United States.

11. Shipper (§ 1.281(a)(9) Proposed as § 1.288(i))

As provided for in section 801(m)(1) of the FD&C Act, FDA proposed to require the submission of the identity of the shipper of the article of food (proposed § 1.288(i)). The shipper is typically not the carrier.

(Comments) A comment states that this information could be obtained from Customs' AMS.

(Response) Although CBP's AMS contains information concerning the

shipper, that information is located in the AMS module of ACS and is not currently available to FDA, as required under section 801(m) of the FD&C Act, which provides that the information must be submitted to FDA. CBP and FDA have concluded that it is not practical, at this time, to attempt to modify AMS and the ACS–OASIS interface to provide this information to FDA.

(Interim final rule) § 1.281(a)(9) requires that the shipper be included in a prior notice. The interim final rule defines shipper (§ 1.277(b)(12)) as the owner or exporter who consigns and ships the article of food from a foreign country or the person who sends an article of food in international mail to the United States.

12. Country From Which the Article Is Shipped (§ 1.281(a)(10) Proposed as § 1.288(j))

As provided in section 801(m)(1) of the FD&C Act, FDA proposed to require the submission of the identity of the country from which the article of food was shipped (proposed § 1.288(j)). This term is defined in proposed § 1.277(c)(3) as the country in which the article of food was loaded onto the conveyance that brings it to the United States.

(Comments) Several comments state that this provision would require submission of information that FDA could obtain from Customs' AMS.

(Response) Although AMS contains information concerning the country from which the article of food is shipped, that information is located in the AMS module of ACS and is not currently available to FDA, as required under section 801(m) of the FD&C Act which provides that the information must be submitted to FDA. CBP and FDA have concluded that it is not practical, at this time, to attempt to modify AMS and the ACS/OASIS interface to provide this information to FDA.

(Interim final rule) Section 1.281(a)(10) requires that the country from which the article is shipped be included a prior notice. The interim final rule defines the country from which the article is shipped (§ 1.277(b)(3)) as the country in which the article of food is loaded onto the conveyance that brings it to the United States.

13. Anticipated Arrival Information (§ 1.281(a)(11) Proposed as § 1.288(k))—Anticipated Port of Entry, Anticipated Date of Arrival, Anticipated Time of Arrival)

FDA proposed to require the submission of the anticipated port of entry (defined as port of arrival), the anticipated date and anticipated time when the article of food will arrive at the port of entry in the United States (proposed § 1.288(k)) to coordinate resources for inspections, examinations, or sampling. FDA also proposed to require the prior notice to be updated if any of the anticipated arrival information changes after the submission of the prior notice (proposed § 1.288(k)(2)). Updates were deemed necessary so FDA could change its plan for coordinating resources when anticipated arrival information changes.

a. *General comments.* (Comments) Comments state that the proposed rule is more restrictive than the Bioterrorism Act. Others suggest that importers would have to work 24 hours a day, 7 days a week and that the proposed rule would eliminate their current methods of doing business. Several commenters ask FDA to recognize commercial realities of weather and traffic problems that result in port and arrival time changes and to provide more flexibility on the information requirements or elimination of the requirements altogether. Comments state that a lack of flexibility would amount to a limitation of the port that is prohibited by the Bioterrorism Act and could impede trade. Other comments state flexible arrival requirements are what Congress envisioned and ask that FDA not refuse food at the border based on inadequacy of anticipated arrival information, changes in border crossing, and other problems beyond the control of the importer.

(Response) The interim final rule requires that the prior notice identify the anticipated port of arrival. This information is necessary to ensure FDA can plan for inspections and communicate with CBP. FDA believes that the reduction of the timeframe for providing prior notice will reduce the number of changes that occur to the arrival information after submission. However, FDA also recognizes the realities of weather and traffic changes and has written the interim final rule to accommodate these variances.

As section 801(m)(1) of the FD&C Act prohibits any limitation on ports, a prior notice will not be inadequate if the anticipated port of arrival, the anticipated date of arrival, or the anticipated time of arrival changes between the time of confirmation of prior notice and the time of arrival. This is reflected in § 1.282(a) of the interim final rule that specifies what changes in information require resubmission of a prior notice. However, if FDA has determined that the article of food must be examined upon arrival and the anticipated arrival information has changed since timely submission of the prior notice, the article may be held by CBP at the port of arrival until the examination can be performed.

b. *Anticipated port of arrival.* (Comments) Comments state it was unclear whether the prior notice was to specify a particular bridge crossing or the port itself.

(Response) The anticipated arrival information must specify the anticipated port of arrival and, if there is more than one crossing location within that port, the anticipated crossing. For the most part, this applies to ports along the northern and southern borders of the United States where there are several crossings over many miles, but all are included in the same port. For example, a food arriving at the port of Buffalo-Niagara Falls may cross at the Peace Bridge or the Lewiston Bridge. For the purpose of this rule, to facilitate inspection, the identification of the bridge is required. However, the prior notice will not be inadequate if the anticipated crossing changes between the time of confirmation of prior notice and the time of arrival.

(Comments) Several comments ask that FDA allow importers to choose alternate border crossings or ports because of possible traffic delays and adverse weather conditions for air and land modes of arrival, or changing flight destinations for air modes of arrival. Comments state importers and even shippers and carriers do not know which border crossing will be used until the food arrives. Some comments note that portions of food may be discharged at different ports of arrival at the discretion of the carrier due to cargo space and weight limitations.

(Response) As noted previously, FDA agrees that arrival locations and times may change due to business practices, inclement weather, and traffic conditions. The interim final rule requires the submission of anticipated arrival information. This means that what must be submitted are the port, crossing location, date, and time that are known to the submitter at the time that prior notice is submitted to FDA. The interim final rule does not require that prior notice be cancelled and resubmitted if this information changes after FDA has confirmed the prior notice for review. A prior notice will not be inadequate if the anticipated port of arrival (including crossing location), the anticipated date of arrival, or the anticipated time of arrival changes between the confirmation of prior notice and the time of arrival.

c. *Anticipated date/time of arrival.* (Comments) Several comments ask for

clarification on the definition of time of arrival. For arrival by water, comments suggest defining arrival as the time the vessel reaches the entrance to the seaport where the importer will be taking delivery, the time the vessel reaches the port, or the time the vessel is unloaded. For arrival by land and air, comments suggest defining arrival as the time the vehicle reaches the border crossing, the time the vehicle reaches traffic backed up at the border crossing, or the time CBP begins processing the vehicle.

(Response) The interim final rule requires submission of anticipated time and date of arrival to provide FDA with information needed for planning resources for examinations of food at the border. From FDA's standpoint, ''time of arrival'' relates to when the food will first become available for examination at the border. For vessels, this would be when the vessel docks in the port. For planes, this would be when the plane lands. For land vehicles, such as trucks, buses, and trains, this would be when they cross at the border.

(Comments) Some comments ask for clarification regarding which time zone to use. Comments are concerned that, due to time zones, food may appear to arrive in the United States before it leaves the country from which it is shipped. Some comments suggest FDA use the time zone of the port of arrival.

(Response) The anticipated time and date of arrival relates to the time zone of the anticipated port of arrival. The time of prior notice submission, anticipated arrival, and actual arrival are all based on local time at the port of actual arrival.

(Comments) Several comments state that it was impossible for importers to know the exact time of arrival until the food arrives because of possible traffic delays and adverse weather conditions for air and land modes of arrival, or changing flight destinations for air modes of arrival. Other comments state that shippers and even carriers do not know when the truck will arrive. However, some comments note that exporters would be likely to know what flight the shipment was on.

(Response) The interim final rule requires the anticipated time and date of arrival. This is the time and date the submitter anticipates that the food will arrive at the port of arrival at the time the prior notice is submitted and confirmed for FDA review.

(Comments) Comments also suggest that FDA obtain the arrival information from AMS.

(Response) Although AMS contains some of this information, the information is located in the AMS module of ACS and is not available to FDA, as required under section 801(m) of the FD&C Act, which provides that the information must be submitted to FDA. CBP and FDA have concluded that it is not practical, at this time, to attempt to modify AMS and the ACS-OASIS interface to provide this information to FDA.

(Comments) Several comments state that the 4-hour window for updates of arrival time is too small and would cause delay in the arrival of food and create extra work in the form of amendments. Thus, the comments conclude the 4-hour window is unreasonable and should be removed. Comments note that even the best-intentioned carrier could fail to make the appointment because of waits of at least 5 hours at the borders. Others state additional delays occur on the Mexican border because the loads must change carriers. Some comments state that it was nearly impossible to predict an arrival time for a vessel within a 4-hour window because ships may arrive in port several days ahead or behind schedule and may sit in a harbor for hours or days before being granted permission to dock. Thus, these comments conclude the window for updates is not realistic for sea transportation. Others state the window for updates is impractical for rail transportation. Importers of live animals comment that the window for updates would be impossible to meet. Several comments suggest that FDA seek alternatives. One comment suggests a 6-hour window for updates. Another suggests importers be permitted to provide prior notice to FDA 2 hours before the carrier reaches the border. One comment suggests that prior notices identifying certain FDA-selected border crossings not be held to the arrival time and not be required to update the prior notice at the time of arrival.

(Response) The interim final rule requires submission of anticipated arrival information to provide FDA with information necessary for planning examinations and communicating with CBP for enforcement and examination purposes. FDA believes that the requirement for submitting anticipated arrival information serves these purposes. FDA has decided to delete the requirements for updating anticipated arrival information because of the reduction of the time requirements for submission. FDA recognizes that some of the anticipated information may change after submission due to unforeseen circumstances, such as business practices of carriers, weather conditions, and traffic conditions.

(Interim final rule) The interim final rule (§ 1.281(a)(11)) requires the submission of the anticipated port of arrival, including crossing location, if applicable, and the anticipated date and anticipated time when the article of food will arrive at that port. The interim final rule does not require that this information be updated if it changes after prior notice had been confirmed by FDA for review. The interim final rule does not require that a prior notice be cancelled and resubmitted if any of the anticipated arrival information changes after confirmation.

14. Port Where Entry Will Be Made for Customs Purposes (Proposed § 1.288(l))

FDA proposed to require the submission of the identification of the port where entry will be made for Customs purposes (§ 1.288(l)). Often, this port is different from the port where the article of food arrived in the United States. FDA proposed that this information is necessary to facilitate communication with CBP and FDA field offices concerning the adequacy of the prior notice and to enable FDA to coordinate resources for inspections, examinations, or sampling.

(Comments) A comment questions the usefulness of the information and asks that FDA delete the requirement because the Customs and FDA ports of entry can be different ports. Another comment states that providing the information would cost additional resources and time for investigation.

(Response) FDA agrees. Due to interfacing with ABI/ACS and development of various means of communication with CBP, this information is no longer necessary in the prior notice submission. Accordingly, FDA has eliminated this information requirement in the interim final rule.

(Interim final rule) The interim final rule does not require submission of the port where entry will be made for Customs purposes.

15. Anticipated Date of Customs Entry (Proposed § 1.288(m))

FDA proposed to require the submission of the anticipated date of entry for U.S. Customs purposes (proposed § 1.288(m)). FDA proposed that this information is critical to enable it to allocate resources for inspecting imported food shipments and efficient communication with and between CBP and FDA field offices.

(Comments) Several comments ask that FDA eliminate this requirement. Comments note that the Customs date of entry is not required by the Bioterrorism Act. Comments state that since the

Customs entry might be a considerable distance from the actual port of arrival, the date of Customs entry is difficult to predict. Another comment questions the usefulness of the Customs date of entry in determining whether to inspect the products at the port of arrival. A few comments ask for clarification of the Customs entry process.

(Response) FDA agrees. FDA has eliminated the Customs date of entry in the interim final rule. Due to interfacing with ABI/ACS and development of various means of communication with CBP, this information is no longer necessary in the prior notice submission.

(Interim final rule) The interim final rule does not require submission of the anticipated date of Customs entry.

16. Importer, Owner, Ultimate Consignee (§ 1.281(a)(12), (a)(13), and (a)(14) Proposed as § 1.288(n), (o), and (p))

Under section 801(m)(2)(B)(i) of the FD&C Act, an article of food that is imported or offered for import with inadequate notice may not be delivered to the importer, owner, or consignee. Thus, FDA proposed to require their identities so that FDA can take steps to ensure that food refused admission under section 801(m) of the FD&C Act is not delivered to them illegally. FDA proposed that only one importer, owner, and consignee could be identified for each prior notice.

(Comments) Some comments argue that section 307 of the Bioterrorism Act does not require the prior notice to identify the importer, owner, or consignee of the article of food that is the subject of the notice. They recommend that this requirement in the proposed rule be eliminated as beyond the scope of the statute and unnecessary for the purposes of section 307 of the Bioterrorism Act. One comment argues that FDA should not require submission of information about the consignee. However, another comment states that the level of detail required is generally consistent with the information submitted by customs brokers acting as agents for importers of record.

(Response) As requested by some of the comments, FDA considered deleting this information or making identity of importer, owner, and ultimate consignee optional. However, section 801(m) of the FD&C Act explicitly prohibits delivery of an article refused under section 801(m) to the importer, owner, or consignee. Section 801(l) of the FD&C Act likewise prohibits delivery of an article of food that has been imported from an unregistered foreign facility that is required to be registered under section 415 of the FD&C Act and 21 CFR part 1, subpart H. If we do not know the identity of these persons, we cannot determine if an article of food that has been refused or placed under hold has been illegally diverted and delivered. Accordingly, we have determined that this information is critical to ensure that we can efficiently enforce the prohibitions in section 801(m) and (l). In requiring this information, FDA is relying on both sections 801(m) and (l) and 701(b) of the FD&C Act.

Moreover, information identifying the importer of record and consignee is currently provided as part of the existing entry process (under OMB control number 0910–0046). Under the interim final rule, the CPB and FDA entry submission may be used to satisfy prior notice. We estimate that 80 percent of prior notices will be submitted through the CPB ABI/ACS entry process. We are concerned that deleting this information or making it optional for prior notice purposes could create considerable confusion about whether the information was still required for entry and admissibility purposes. For FDA, these pieces of information are necessary for administering section 801(a) of the FD&C Act and its implementing regulations, which require that FDA provide notice of sampling and notice of intent to refuse admission to the owner or consignee. Indeed, the identities of consignees and importers of record have long been provided to FDA. Prior to the availability of OASIS, FDA was provided with this information about imported foods on the FDA Form 701 (Ref. 18). In addition to the name and address of the importer of record and the consignee, FDA Form 701 included information such as: Entry number and date, bill of lading number, port of lading, country of origin, port of unloading, port of entry, value, container number, vessel name, arrival date, location of lot, date available, contact phone number, broker identification, manufacturer/shipper, quantity, packaging description, and a description of the food including the Food Canning Establishment number. Since the availability of OASIS, all information that has been submitted through the ABI/ACS interface has also included name and address of the importer of record and the ultimate consignee. Those who do not provide entry information electronically through ABI/ACS submit a ''paper'' entry to CBP and also provide FDA paper notification that includes information on importer and consignee. Some still use the FDA Form 701.

(Comments) One comment asserts that the identity of the consignee is proprietary, implying that it is protected from disclosure to FDA.

(Response) Where consignee information is proprietary, it is likely to be ''confidential commercial information'' and protected from public disclosure. However, the fact that it is considered ''proprietary'' is not a bar to requiring it in prior notice and entry submissions.

(Comments) Other comments ask that FDA decrease the burden of providing this information by using the registration number, which FDA could use to obtain the other identity information elements from its databases

(Response) FDA agrees in part. Although the interim final rule does not require the registration numbers of the importer, owner, or ultimate consignee, the FDA PN System Interface allows for submission of the name of the firm and limited address information (city and country) when a registration number is provided.

(Comments) Other comments seek to decrease the burden by asking FDA to require information regarding the entity submitting the prior notice, which could be the importer, owner, or consignee, but not regarding all three. Another comment concedes that FDA should require the identification of the owner, but that the owner is often the importer or the consignee.

(Response) FDA agrees. The FDA PN System Interface provides the transmitter with the ability to easily repeat information, *e.g.*, the submitter is the same as the importer or the owner is the same as the ultimate consignee. This feature may also be available for submission through ABI/ACS, depending on the specific ABI software used by the customs broker or self-filer. The identity of the owner is only needed if it is not the same as the importer or the ultimate consignee.

(Comments) Several comments state that FDA should be able to communicate its admissibility decisions and decisions about prior notice adequacy with the importer.

(Response) As set out in the interim final rule, in the first instance, the carrier will be notified regarding refusals under section 801(m) of the FD&C Act. Information identifying the importer will allow FDA to follow up with the importer and develop procedures for notifying them as well.

(Comments) A comment asks that FDA define ''importer'' consistently with CBP. Another comment expresses confusion as to the meaning of the term ''owner,'' asking whether the requirement for the owner's identity in

the prior notice refers to the owner of the article of food at the time it arrives at the port of arrival.

(Response) FDA believes that the persons affected by this interim final rule will know, in most situations, what entities are referred to by the terms ''importer'' and ''owner'' since these terms are commonly used in importation, including the CBP entry process. If experience with this interim final rule indicates confusion regarding these terms, then FDA will issue guidance on them.

Regarding the term, ''importer,'' FDA agrees with the comment. The agency believes this term should be interpreted the same as ''importer of record'' as that term is used by CBP in regard to the entry of merchandise.

Regarding the term, ''owner,'' FDA agrees that this is the owner of the article of food at the time of arrival. However, if a prior notice is given after the article is refused under section 801(m)(1) of the FD&C Act, then the owner is the owner or the article of food at the time the prior notice is submitted.

(Comments) Comments ask FDA to limit the information required to identify the importer, owner, and consignee to the registration number, which FDA could use to obtain the other identity information elements from its databases. In this way, comments seek to decrease the burden of prior notice submission by avoiding manual entry of addresses. Other comments seek to decrease the burden by asking FDA to require information regarding the entity submitting the prior notice, which could be the importer, owner, or consignee, but not regarding all three.

(Response) The interim final rule does not require the registration number of the importer, owner, or ultimate consignee. However, if a registration number is provided, city and country may be provided instead of the full address.

(Comments) A comment states that the identification of the importer, owner, and consignee could be obtained from AMS.

(Response) Although AMS may contain information concerning the consignee, that information is located in the AMS module of ACS and is not available to FDA, as required under section 801(m) of the FD&C Act, which provides that the information must be submitted to FDA. CBP and FDA have concluded that it is not practical, at this time, to attempt to modify AMS and the ACS/OASIS interface to provide this information to FDA.

(Interim final rule) Section 1.281(a)(12), (a)(13), and (a)(14) of the interim final rule require submission of information that identifies the importer, owner, and ultimate consignee. However, the identification of the importer, owner, and ultimate consignee are not required if the article of food is imported or offered for import for transshipment through the United States under a T&E bond.

17. Mode of Transportation (§ 1.281(a)(15))

In the proposed rule, the timeframe for prior notice was the same for all imports, regardless of mode of transportation. Thus, FDA did not propose submission of the identification of the mode of transportation.

(Comments) No comments were received on identification of the mode of transportation. However, as discussed earlier, many comments recommend that FDA should set the timeframes for prior notice by mode of transport. FDA agrees and has revised the timeframes accordingly.

(Response) In the interim final rule, the timeframes are tied to mode of transportation. Thus, mode of transportation is necessary to calculate when prior notice is timely. In addition, FDA has determined that, for submitting prior notice, identification of the mode of transportation is necessary for identification of the article of food at the time of arrival for the purposes of planning examinations and communicating with CBP for enforcement and examination. This information currently is provided to FDA by customs brokers or self-filers through ACS.

(Interim final rule) Section 1.281(a)(15) requires submission of information concerning the mode of transportation, except for those prior notice submissions covering articles of food arriving by international mail. For submissions through ABI/ACS, this information will take the form of the current ABI requirements for declaration of mode of transportation. For submissions through the FDA PN System Interface, selection of the mode of transportation will be accommodated by a drop-down menu.

18. Carrier (§ 1.281(a)(16) Proposed as § 1.288(q))

FDA proposed to require the identity of each carrier or transporter firm that transports the article of food from the country from which the article was shipped into the United States, including the submission of the SCAC. Identification of the carrier is necessary to enable FDA and U.S. Customs to identify the appropriate article of food for inspection or holding when the food arrives in the United States. FDA notes that a carrier typically is a different firm than the shipper. The broker or self-filer currently submits carrier information to ABI/ACS when entry is made, and it later is transmitted to OASIS.

(Comments) Comments agree that this information is helpful and necessary for locating cargo. Comments note that carrier information is currently submitted to CBP via ABI/ACS to OASIS. Other comments state that accurate carrier information cannot be provided by 12 noon the day before arrival.

(Response) FDA believes that identification of the carrier is necessary for the purpose of response to prior notice, both for examination purposes and communication with CBP. The shortened timeframes resolve the concern that the carrier may not be known by noon the day before arrival, to the extent possible, given the mandate from Congress to require prior notice.

(Comments) Comments ask that FDA eliminate the requirement to identify multiple carriers, suggesting that the only pertinent carrier is the one arriving at the U.S. port.

(Response) FDA agrees and has eliminated the requirement to identify each and every carrier that transported the article of food from the country of production to the United States, *i.e.*, multiple carriers. The interim final rule requires submission of the identity of the carrier that is or will be carrying the article of the food from the country from which the article is shipped to the United States.

(Interim final rule) Section 1.281(a)(16) requires submission of the carrier's SCAC or IATA code. If these codes are not applicable, the carrier's name and country must be submitted.

19. Planned Shipment Information (§ 1.281(a)(17))

The proposed rule did not require submission of planned shipment information beyond identification of the carrier.

(Comments) Some comments suggest that, in addition to carrier information, FDA should require vessel name, voyage/flight numbers, and bill of lading information.

(Response) FDA agrees. FDA has determined that additional planned shipment information is necessary for identification of the article of food for examination and communication with CPB. The requirement is to provide planned shipment information as it exists when the prior notice is submitted. FDA recognizes that some of this information may change after the

prior notice has been submitted and has addressed this in § 1.287(a), which specifies when changes require resubmission to FDA. Most of this information is currently submitted to FDA by customs brokers or self-filers through ABI/ACS. The planned shipment information is necessary to ensure the effective enforcement of section 801(m) of the FD&C Act. FDA and CBP have determined that the planned shipment information includes submission of HTS code information. The HTS code is particularly critical for communication between FDA and CBP for shipments that are entered for transportation in-bond without appraisement under 19 U.S.C. 1552 or 1553, and identification of the HTS will assist CBP in the efficient processing of prior notice through ACS. CBP uses the HTS number in ACS to ensure that the required FDA information accompanies the entry or entry summary transmitted through ABI/ACS to OASIS. For prior notices submitted through the FDA PN System Interface, the HTS numbers are needed to ensure that the data collected from the Customs entry when it is transmitted through ABI/ACS can be matched to prior notice.

(Interim final rule) Section 1.281(a)(17) requires submission of the following planned shipment information, as applicable, based on the mode of transportation:

- Airway bill number(s) or bill of lading number(s) (not applicable to food carried by or otherwise accompanying an individual);
- For food arriving by ocean vessel, vessel name and voyage number;
- For food arriving by air carrier, flight number;
- For food arriving by truck, bus, or rail, trip number;
- For food arriving as containerized cargo by water, air, or land, container number(s);
- For food arriving by rail, car number (not applicable to food carried by or otherwise accompanying an individual);
- For food arriving by privately owned vehicle, the license plate number and state or province; and
- The 6-digit HTS code that is applicable to the article of food.

The interim final rule does not require that prior notice be cancelled and resubmitted if this information changes after FDA has confirmed the prior notice for review. A prior notice will not be inadequate if any of the planned shipment information changes between the confirmation of prior notice and the time of arrival.

20. International Mail (§ 1.281(b))

FDA did not propose separate information requirements for prior notice for food imported or offered for import by international mail.

(Comments) No comments were received on information requirements for food imported or offered for import by international mail.

(Response) For clarity and ease of reference, the interim final rule segregates the information required in prior notice submissions for food arriving by international mail. In addition, FDA has clarified the information required in three instances. FDA has replaced anticipated arrival information with planned date of mailing. FDA has determined that identification of the recipient of an article of food arriving by mail is necessary instead of the importer, owner, or consignee. Thus, the interim final rule requires the identification of the recipient by name and address for food arriving by international mail. Finally, we also have not included information identifying the mode of transportation, carrier, planned shipment information, and hold information, as this information is not relevant to mail imports.

(Interim final rule) See table 1A in section II.J of this document for the information requirements for food imported or offered for import by international mail.

21. Refused Food (§ 1.281(c))

FDA did not propose separate information requirements for prior notice for food refused because of inadequate prior notice. However, proposed § 1.288(d) required identification of the location where the food is being held after the food had been refused for inadequate prior notice. This information is necessary to ensure FDA can locate the food for inspection and to ensure compliance with the hold requirement.

(Comments) No comments were received on separate information requirements for food refused because of inadequate prior notice. However, comments ask for clarification that the hold location information is only necessary if the prior notice was absent or inadequate, *e.g.*, the article of food has been refused under section 801(m) of the FD&C Act.

(Response) FDA agrees. For clarity and ease of reference, the interim final rule segregates the information required in prior notice submissions for food refused because of inadequate prior notice. Submission of the hold location information is not necessary for prior notice submissions covering an article of food arriving by international mail.

(Interim final rule) See table 1A in section II.J of this document for the information requirements for food refused under section 801(m) of the FD&C Act.

(Summary of the interim final rule) Table 1A in section II.J of this document shows a summary of all information required by § 1.281(a), (b), and (c). For clarity, the table also identifies under what circumstances certain information is not required, *e.g.*, registration numbers.

I. ''What Must You Do If Information Changes After You Have Received Confirmation of a Prior Notice From FDA?'' (Section 1.282 Proposed as §§ 1.289 through 1.294)

1. ''What Changes Are Allowed to a Prior Notice After It Has Been Submitted to FDA?'' (Proposed § 1.289)

FDA proposed to allow changes to certain information in the prior notice after a prior notice was submitted. FDA proposed to allow amendments to the product identity information when complete product identity did not exist by the deadline for the submission of a prior notice and updates to arrival information. The proposed rule also required that, if the identity of the grower was not known at the time of initial submission of the prior notice, but was known at the time of submission of amended or updated information, the identity of all known growers must be submitted. The proposed rule required that, in the event that other information in the prior notice changed, no amendment or update was permitted, and the prior notice must be cancelled and resubmitted.

(Comments) Comments ask FDA to be more flexible in allowing changes to prior notices. Some comments state that the time periods for prior notice and amendments and updates are not workable and should be made flexible. Comments note that requiring notice by noon of the day before the anticipated importation would cause an increased amount of amendments and updates.

Some comments note that the high degree of detail required in the prior notice will increase the need for amendments and that the likelihood of amendments will be more than FDA estimated. Some comments state that if the timeframe for submitting prior notice was changed, *i.e.*, shortened to 4 hours for land and air and 8 hours for water, then amendments and updates would not be necessary.

(Response) FDA agrees with the comments that state that if the deadline for submission of prior notice were reduced, amendments and updates would not be necessary. FDA has chosen timeframes that provide it with very little leeway in the time it has to ''receive, review and respond'' to the prior notice submissions. Thus, we concluded that we could no longer permit changes to prior notice without restarting the clock. In addition, the use of ABI/ACS precludes amendments and updates: changes to ABO/ACS submissions that have been electronically transmitted to FDA's OASIS and confirmed by FDA for review are not feasible because CBP also needs finality so it can complete its own screening of the entry. Therefore, the interim final rule does not allow for changes to a prior notice after the transmitter has been notified that FDA has confirmed the prior notice for review.

(Comments) One comment asks that FDA clearly define the circumstances under which updates and amendments to submissions of prior notice must be made. One comment asks FDA to clarify that a change in the anticipated arrival information is not the same as a product identity amendment and, therefore, is not subject to the same mandates as the procedure for changes in the product identity.

(Response) Because the interim final rule does not provide for amendments and updates, there is no need to address these comments asking for clarification.

(Comments) Some comments suggest that FDA allow amendments to all information in the prior notice. Some comments state that it is likely that companies filing numerous prior notices will inadvertently make clerical errors, such as telephone or fax numbers, Customs ACS entry line numbers, or Customs entry type. Others ask for clarification of any penalties associated with cancellation of a prior notice and resubmission of a correct notice.

(Response) FDA believes that the reduction of the deadline for submission of prior notice and the revisions to the information required have eliminated much of the need for amendments. FDA notes that transmitters should try to avoid clerical errors that could result in unnecessary rejections or refusals. To assist, FDA has designed the FDA PN System Interface to review presentation of some information before confirmation. The FDA PN System Interface will reject certain information if it is in the wrong format or does not match FDA's databases and the transmitter will be given an opportunity to make corrections during the submission process, before notice of confirmation from FDA that the prior notice has been submitted for review. The interim final rule provides for no penalty if a prior notice is cancelled. If prior notice has been submitted and confirmed and the food is no longer imported or offered for import, the prior notice should be cancelled. However, if the article of food is still imported or offered for import into the United States, submission of a corrected and timely prior notice is necessary.

(Interim final rule) Section 1.282 of the interim final rule requires that if the information except estimated quantity, anticipated arrival information, and planned shipment information changes after the transmitter receives notice that FDA has confirmed the prior notice for review, the prior notice should be canceled. If the article of food is still intended for import or will be offered for import, the prior notice must be resubmitted in accordance with this subpart. If you submitted the prior notice via the FDA PN System Interface, you should cancel the prior notice via the FDA PN System Interface. If you submitted the prior notice via ACS, you should cancel the prior notice by requesting that CBP delete the line or entry. The ''clock'' restarts after the confirmation of the submission containing the corrected information.

2. ''Under What Circumstances Must You Submit a Product Identity Amendment to Your Prior Notice After You Have Submitted It to FDA?'' (Proposed § 1.290)

FDA proposed that product identity information required by proposed § 1.288(e)(1) may be amended if all of the information about the identity of the food did not exist by 12 noon of the calendar day before the day of arrival. The proposed rule also provided that the common or usual or trade name, brand name, lot or code or identification numbers, and quantity may be amended. FDA also clarified that a prior notice may not be amended to change completely the identity of the article, *e.g.*, a prior notice identifying the food as lettuce may not be amended to identify the food as pears. The proposed rule provided that prior notice may be amended only once.

(Comments) Some comments suggest that FDA allow unlimited amendments to any information requirement at any time. Several comments express concern about the limitation of only one amendment. They explain if the process has to start over again because the information changes after submitting one amendment, there would be an additional 2-day delay before the product is allowed to cross the border. Some comments indicate that more than one amendment might be needed to provide accurate information. Some comments indicate specific additional information for which amendments should be allowed, such as the carrier and consignee.

(Response) FDA has chosen timeframes that provide it with very little leeway in the time it has to ''receive, review, and respond'' to prior notice submissions. Thus, we concluded that we could no longer permit changes to prior notice without restarting the clock. However, the significant shortening in timeframes should address many of the concerns. In addition, the submission systems will allow for correction of errors revealed by the systems' initial validation. The interim final rule has thus eliminated the requirement for amendments.

(Comments) One comment asks FDA to create an exemption from quantity amendments for bulk shipments for which the actual quantity is within 10 percent of the proposed actual quantity.

(Response) The interim final rule requires submission of the estimated quantity. This revision nullifies the need for amendment to the quantity description by allowing the submitter to estimate the amount of food that is expected to arrive. The interim final rule provides for no penalty if the quantity of an article of food imported or offered for import differs from the quantity estimated in a prior notice.

a. *Intention to amend.* The proposed rule required that the submitter must indicate his or her intention to amend the product identity information at the time the prior notice is submitted.

(Comments) One comment contends that, if certain elements are amendable, FDA should not need additional advance notice of that fact. Other comments ask FDA to eliminate the requirement for the submitter to anticipate the need for an amendment. Other comments ask for clarification on whether the intent to amend or update must be evident on the initial prior notice or if a product identity amendment or arrival update can be made anytime within the minimum 2-hour requirement.

(Response) The interim final rule eliminates the requirement for amendments and updates. Thus, comments on the proposed limitation are moot.

b. *Topping off.* FDA recognized that the limitation on amendments might affect the practice of ''topping off a container'' by filling unused space in the shipping container or truck bed with last-minute shipments of other food

products not covered by prior notice. FDA solicited comments on how common ''topping off'' is and the quantities of food involved.

(Comments) Comments state that it is common practice to fill extra space in a shipment with additional product after an order has been filled. A comment suggests that there should be an allowance for last minute changes in a load. A comment suggests that more flexibility is needed to avoid the extraordinary cost of importing a partial shipment. A comment states that a prohibition on the practice of topping off would make some shipments, particularly of smaller items, less cost competitive and may reduce the overall availability of some products. Another states that late offers to add additional quantities or even additional products to a shipment at a discount make for more efficient commerce for importers and can provide economy and value to American consumers. Another comment suggests that FDA reconsider and adopt in the final rule circumstances under which shippers could amend notices to include foods from the same manufacturer or grower. The comment further states that this would allow the full utilization of transport space even when that space is filled with additional items not explicitly declared in the original prior notice.

(Response) The requirements of the statute are to provide FDA with notification of each article of food in advance of importation, not advance notice of some of the articles of food and post-arrival notification of others. The complete identity of each article of food is necessary for FDA to receive, review, and respond to the notice. FDA has significantly reduced the time required for submission of the prior notice before arrival. FDA has also revised the way information on quantity may be presented. The interim final rule requires the estimated quantity of the article of food. FDA believes that both of these revisions will allow for timely submission of accurate information and should limit, as much as is permissible under the statute, the effect of prior notice on the practice of ''topping-off.''

3. ''What Is the Deadline for Product Identity Amendments Under Proposed § 1.290?'' (Proposed as § 1.291)

FDA proposed a 2-hour minimum deadline for product identity amendments submitted under proposed § 1.291. FDA noted that product identity amendments are most likely to be needed for articles imported by land or air rather than water arrivals.

(Comments) Some comments are supportive of a deadline for amendments of up to two hours before arrival, but only if that gave FDA sufficient time to receive, review, and respond to the information. Some comments state that allowing amendments to be submitted up to 2 hours before arrival would not be problematic, while others contend that limiting amendments to two hours before arrival was too restrictive and would result in higher costs and compromised product integrity. Comments suggest changing the deadline to allow amendments up to 1 hour before arrival; until just before or at the time of arrival; after arrival (with a 3 hour limit, 24 hour limit, or no limit at all); or at any time before or after arrival. Several comments note that some information, such as the Customs entry number or quantity, cannot be verified by the proposed submitter until the shipment arrives. Several comments state that the carriers should be permitted to amend product identity information. A few commenters point out that the proposed 2-hour period for amendments before arrival is particularly problematic for multiple commodity exports. Comments indicate that the need for amendments might be identified at the time of loading, which may be less that one-half hour before arrival at the border.

(Response) FDA has chosen timeframes that provide it with very little leeway in the time it has to ''receive, review and respond'' to the prior notice submissions. Thus, we concluded that we could no longer permit changes to prior notice without restarting the clock. In addition, as noted earlier, ACS cannot accommodate changes in submissions that have been confirmed by FDA for review. Therefore, the interim final rule does not provide for amendments.

4. ''How Do You Submit a Product Identity Amendment or an Arrival Update to a Prior Notice?'' (Proposed § 1.292)

The proposed rule required that a product identity amendment or an arrival update to a prior notice may be submitted only in the same manner as an initial prior notice; that is, electronically to FDA through the FDA PN System Interface.

(Comments) A comment asks that the agency examine means by which communication to the agency of any unexpected change in this information can be provided by the entity that is actually knowledgeable about a change in the date of arrival, for example, by the ocean or air carrier. Several comments suggest that the carrier that is the party with the most accurate information on arrival time and can therefore provide the most efficient communication to FDA. Other comments raise concerns about providing unlimited discretion to carriers to make substantive changes to submissions, but note that the need for carriers to make ''updates'' is essential. One comment indicates that alternative mechanisms for the carrier to submit updates, such as touch-tone telephones, should be explored.

(Response) Although requirements for amendments to product identity information and arrival updates have been deleted from the interim final rule, FDA recognized that several entities might have critical information concerning required prior notice information. Therefore, the interim final rule does not limit who can submit prior notice information. The interim final rule continues to require electronic submission of prior notice to FDA.

5. ''What Are the Consequences if You Do Not Submit a Product Identity Amendment to Your Prior Notice?'' (Proposed § 1.293)

FDA proposed that if a U.S. importer or U.S. purchaser, or their U.S. agent, informed FDA in a prior notice that the submission would be amended, but subsequently did not amend it appropriately and within the applicable timeframe, then the prior notice would be inadequate for the purposes of proposed § 1.278(a). FDA clarified that the consequences of inadequate prior notice are the same as the consequences for failing to provide prior notice, *e.g.*, the food is subject to refusal if admission. FDA explained that the indication that a prior notice would be amended tells us that the prior notice is incomplete. FDA noted that without complete product identity, the agency could not adequately determine whether to inspect or take other action when the food arrives in the United States.

(Comments) Some comments object to the proposed provision that, if the submitter of a prior notice indicates that an amendment to the product identity will be submitted, but subsequently fails to do so, the original prior notice will be deemed inadequate and the product would not be allowed to enter. Some point out that FDA should not penalize a submitter for anticipating an amendment and then not amending the prior notice.

(Response) For the reasons set forth previously, FDA has eliminated the requirement to provide product identity amendments.

6. ''What Must You Do if the Anticipated Arrival Information (Required Under Proposed § 1.288(k)(1)) Submitted in Your Prior Notice Changes?'' (Proposed as § 1.294)

FDA proposed to require the submitter to update anticipated arrival information submitted in a prior notice, if the anticipated information changes after the submission. FDA proposed that if the time of arrival is expected to be more than 1 hour earlier or more than 3 hours later than the anticipated time of arrival, the time of arrival must be updated. FDA proposed that updates to the arrival information must be submitted 2 hours before arrival (proposed § 1.294).

a. *General.* (Comments) Many comments indicate that the window of time for arrival updates is too small. Several comments suggest changing the requirements for submitting updates for arrival information. Suggested changes included expanding the window for arrival to 2 hours and 6 hours before the anticipated arrival time and 6, 7, 8, and 18 hours after the anticipated arrival time. A few comments state that notification of the day of arrival, not the time, should be sufficient. Some comments state that updates to arrival information should be allowed upon arrival at the border. One comment objects to allowing only one update to arrival information. The comment complains that this is very restrictive and that submitters must be allowed to keep updating the ''prior notice of arrival'' without worrying about the form being rejected.

Some comments point out that the owner, importer, and U.S. agent often do not know the actual port of entry for a ship or airplane, the time of entry, or changes in this information. For example, an air shipment of seafood may be switched to a different plane, which arrives at the U.S. port outside the anticipated arrival window. This may occur during nonbusiness hours, before notification of the change can be provided.

One comment suggests that exporters who choose to report to specific border crossings identified by FDA, should not be required to provide updates due to lateness in the time of arrival at the border.

One comment states that ambiguity on when updates can be submitted might lead to confusion and inconsistent application of these provisions. The comment expresses concern that some ports may take the position that the update must be provided within the 4-hour window so FDA will be informed that the shipment will not be arriving when originally anticipated. Yet other ports may take the position that the update requirements are satisfied as long as the update is received at least 2 hours before arrival, regardless of how many hours or days it arrives after the originally identified arrival time.

Some question how notifications that need to be amended and subsequent amendments for numerous entries could assist FDA in scheduling of inspections.

Some point out that carriers should continue to be able to change ports of arrival, as necessary, to find a more expeditious route, based on weather and/or traffic conditions. One comment states that exporters/importers should be able to declare up to three possible ports of entry that all fall under the jurisdiction of a single FDA regional office for administrative and inspection purposes.

One comment suggests that a requirement to update the port of entry could be viewed as limiting the port of entry, which is prohibited by the statute.

One comment points out that the proposed rule is silent on changes to border crossings, unlike changes in arrival time and suggested that FDA clarify whether it needs to be notified of a change to the anticipated border crossing or if any border crossing is acceptable.

b. *Water.* (Comments) One comment asks for a wider margin of variability for the arrival of ocean-going vessels. Some comments state that for ocean-going shipments, an update should not be required if the actual arrival at the port of entry is not more than 24 hours before or after the anticipated time of arrival specified in the prior notice. One comment notes that because of the logistics and unpredictability of ocean transport, it is not possible to accurately predict arrival time of a carrier within the 4-hour window provided. One comment notes that such tight time frames would increase the cost of the prior notice process because the submitter will be forced to continuously check on the status of the shipment to ensure that the arrival time is correct all the way up to 2 hours before delivery. For ocean imports, vessel arrival times may vary widely depending upon weather conditions, scheduling, and loading changes. Vessels can be held or delayed at various ports en route and importers are unlikely to be informed of these changes. Some comments state that it is unrealistic for a sea vessel to have to individually update hundreds or thousands of notices when the vessel is delayed. Comments ask that FDA allow a single update from a carrier to automatically update each prior notice associated with food products on that vessel.

c. *Air.* (Comments) One comment states that the 2 hours for updates is not practical for air shipments because air carriers often do not inform importers of changes in arrival time until the cargo is close to its destination. One comment notes that because of current air and travel security procedures, arrivals are rarely at their scheduled times.

d. *Land/road.* (Comments) A few comments indicate that with respect to trucks, there will be circumstances where a driver cannot contact a dispatcher to submit an arrival update, *e.g.*, 2 a.m. The comments note that a large amount of border truck traffic flows in the early morning/mid-to-late evening to avoid rush-hour traffic in major centers. However, shippers do not have a mechanism for submitting updates at these times when there are unforeseen delays that prevent arrival outside of the anticipated window. Comments state that FDA should provide flexibility in the rule for these and similar circumstances where, for legitimate reasons, it is not possible to provide an update.

Some comments express concern about current delays for trucks at ports of entry, which may vary from a few minutes to 12 hours. The comments note that, because it is necessary to submit updates when a truck is outside the proposed time range for arrival, many trucks might be forced to sit idly on the side of the road waiting for their proper window when FDA will allow entry. Comments express concern that if a shipment were to miss the original arrival time, they would be forced to file an update and wait 2 hours to rejoin the line.

e. *Land/rail.* (Comments) For rail cargo, arrival times may vary depending on scheduling and loading changes. Often, multiple rail cars on one entry can be located at multiple locations across the rail yard. Actual crossing times for those cars can vary widely depending on that location and the ability of the rail to load and cross them. In these cases, linking prior notice into the manifest could also allow the carrier to provide electronic updates.

(Response) FDA agrees that there may be factors such as business practices, weather, and traffic congestion that may impact the accurate representation of the port, date, and time of arrival. Although the interim final rule will continue to require submission of the anticipated place, date, and time of arrival that is known to the submitter, the interim final rule does not require an update to that information, and prior notice will not be deemed inadequate if

the information changes after FDA has confirmed the prior notice for review.

In sum, FDA has removed from the interim final rule all proposed sections related to product identity amendments and arrival updates (proposed §§ 1.289 through 1.294) because of the following situations:

- The timeframes are shortened substantially;
- The timeframes provide us with very little leeway in the time we have to ''receive, review and respond'' to the prior notice submissions. Thus, we can no longer permit changes to prior notice without restarting the clock. FDA believes that the information required by the interim final rule for prior notice should be sufficiently fixed to be submitted within these new, shorter timeframes;
- FDA has revised the required information in the interim final rule, including the requirement to provide the estimated quantity;
- If the estimated quantity, the anticipated arrival information, or the planned shipment information change, the interim final rule does not require that the prior notice be resubmitted; and
- Under the interim final rule, prior notice can be submitted through ABI/ACS. The proposed provisions for amendments and updates to a submission through ABI/ACS are not feasible after the submissions have been electronically transmitted to OASIS and confirmed by FDA for review.

(Summary of the interim final rule) FDA has removed from the interim final rule all proposed sections related to product identity amendments and arrival updates (proposed §§ 1.289 through 1.294).

J. ''What Happens to Food That Is Imported or Offered for Import Without Adequate Prior Notice?'' (Section 1.283) and ''What are the Other Consequences of Failing to Submit Adequate Prior Notice or Otherwise Failing to Comply With This Subpart?'' (§ 1.284 Proposed as § 1.278)

1. Inadequate Prior Notice (No Prior Notice, Inaccurate Prior Notice, or Untimely Prior Notice) (§ 1.283(a) Proposed as § 1.278(a))

FDA proposed in § 1.278(a) that if an article of food is imported or offered for import with no prior notice or inadequate prior notice, the food shall be refused admission, as set out in under section 801(m)(1) of the FD&C Act. Proposed examples of inadequacy were untimely, inaccurate, or incomplete prior notice.

(Comments) Comments ask for clarification on what would cause a prior notice to be incomplete or inadequate. Some comments express concern that clerical errors or failure to provide minor information or optional information could result in a refusal. Some comments suggest that inadequate prior notice should be confined to material omissions or major errors that would seriously impede the agency's ability to review and appropriately respond to the notice. Comments ask whether they would be notified about such deficiencies and given a chance to correct them. Some comments object to not receiving feedback, before reaching the port, when the prior notice is inadequate.

(Response) A prior notice is not complete if the required information, as set forth in § 1.281, has not been provided. However, FDA agrees that feedback during the transmission process to reduce mistakes and omissions that could result in unnecessary holdups or refusals is a good idea. As explained earlier, both systems will review and validate required information to minimize the likelihood that clerical or typographical errors will result in an incomplete or inaccurate prior notice. The systems will tell transmitters which required information is still lacking or is recognized by the initial validation as facially incorrect, to allow transmitters to make corrections quickly. Moreover, the systems will not provide a confirmation until required information is complete and facially valid. Thus, if the initial incorrect information is not corrected and submitted, the transmitter will not receive a prior notice confirmation. FDA believes that this initial review/validation process will help ensure that transmitters will not make inadvertent errors that could result in a refusal. We advise, however, that this initial review/validation process will not be capable of identifying all possible errors. Thus, submitters and transmitters should understand that confirmation does not mean that FDA has determined that the prior notice is accurate in all respects.

If FDA determines that the prior notice is inaccurate after the systems provide a confirmation, the article of food is subject to refusal under § 1.283(a)(1)(ii). FDA has the option of issuing the refusal notice to the transmitter under § 1.283(a)(1)(ii) before arrival, assuming that FDA determines that the prior notice is inaccurate before arrival and before the time period for the prior notice has expired. If this happens, the transmitter must resubmit an accurate prior notice in accordance with § 1.282. This will remove the refusal, although it will ''restart the clock'' in terms of when prior notice must be submitted to FDA. Until we have had some experience with prior notice review, we do not know how often we will be able to determine prior notice inaccuracy before food arrives. However, in certain situations, inaccuracy of prior notice cannot be determined until the article of food is examined upon arrival.

(Comments) Comments suggest the regulation provide a waiver or other mechanism to release foods that are safe, although the electronic paperwork is not complete. Comments also suggest that the regulation provide that, unless FDA has credible evidence or information that an article of food presents a threat of serious adverse health consequences or death to humans or animals, that FDA would not refuse the article if the prior notice is incomplete or inadequate.

(Response) FDA does not agree that the regulation should provide a waiver for refusal when some, but not all required, information has been submitted. Given that the purpose of prior notice is to provide FDA with better information sooner about food imports, including such a waiver in the rule would seem to be antithetical to the provision. The reference to the credible evidence standard in section 801(m) of the FD&C Act, which appears in the part of section 801(m) that deals with FDA review of prior notice after refusal, does not suggest otherwise. Section 801(m)(2)(B)(ii) of the FD&C Act states that, when FDA reviews a prior notice that has been submitted for a refused article of food, FDA ''shall determine whether there is in the possession of [FDA] any credible evidence or information indicating that such article presents a threat of serious adverse heath consequences or death to humans or animals.'' FDA does not agree that this provision means that FDA should not refuse food with an inadequate prior notice under section 801(m)(1) of the FD&C Act when FDA has no such credible evidence or information. If that is what Congress intended, it would not have provided for refusal of an article of food without adequate prior notice, as it did in section 801(m)(1) of the FD&C Act.

(Comments) Comments note that the proposed rule did not set out procedures for notifications regarding refusals and holds. Comments ask who would be notified of refusal and when. Comments state that FDA should notify importers, purchasers, or manufacturers that an article is being held. One comment notes that carriers would have no way of determining if prior notice had been satisfied until they arrived at

the border, but that they would be responsible. A comment also states that FDA should engage the manufacturer or processor when the situation involves a bioterrorism threat or event.

(Response) FDA and CBP have determined that the most appropriate notification point is the carrier. When an article of food arrives at the border without adequate prior notice (*i.e.*, none, inaccurate, or untimely), the carrier is the clearest immediate point of contact that FDA and CBP staff at the border have. Thus, FDA or CBP intend to notify the carrier that the article of food is refused due to inadequate prior notice when the food is presented for CBP processing. It will be up to the carrier to communicate the prior notice refusal to other persons or firms. Neither FDA nor CBP currently has sufficient capability at the border to communicate these refusals to other persons and still process arrivals and examinations in a reasonable amount of time. We recognize that this will affect carriers. We will be exploring ways to provide notice to the transmitter and others, as well. FDA notes that if carriers want to ensure, for any food they are transporting, that prior notice has been submitted to FDA and confirmed for review, they can ask that a copy of the PN confirmation be provided to them. Indeed, under § 1.279(g), for prior notices transmitted through the FDA PN System Interface, the carrier must present the PN confirmation number to CBP or FDA upon arrival.

We do not agree that FDA should provide routine advance notice that it intends to refuse, examine, or hold food or has asked CBP to do so. Although FDA and CBP are structuring implementation to ensure that changes in ports and arrival times will not mean that food which should be refused, held, or examined at the port of arrival slips past us, we believe that routine advance notice could make it easier for the unscrupulous to evade FDA requirements and import unsafe food. Finally, whether we contact importers or manufacturers when there is a bioterrorism threat or other food-related emergency will depend on the particular circumstances.

(Comments) Some comments state that inconsistency in time and changes in the port of arrival should not result in refusal of the article. One comment asks whether a shipment that arrives one-half hour late will be treated the same as one that arrives 12 hours late.

(Response) As explained elsewhere, changes in the anticipated arrival information or planned shipment information will not be a basis for a refusal under section 801(m)(1) of the FD&C Act if FDA wants to examine the shipment; however, these changes may mean waiting while FDA is notified by CBP and arranges to examine the shipment. This is more likely to be the case with changes in ports and in arrivals that are much later than the anticipated time.

When it comes to changes in arrival time, what matters is whether the prior notice time was submitted sufficiently in advance of arrival, in accordance with the timeframes set out in § 1.279(a) of the interim final rule. These timeframes are what FDA has determined are necessary, as a general matter, to ensure that FDA has enough time to receive, review, and respond to each prior notice appropriately. However, § 1.283(a)(1)(iii) of the interim final rule does provide that if an article of food arrives early, before the prior notice time has elapsed, its arrival will not be considered untimely if FDA has already reviewed the prior notice, determined its response to the prior notice, and advised CBP of that response. FDA believes there is no need to make the food wait if the agency has been able to accomplish its prior notice review sooner than anticipated.

(Comments) One comment asks for clarification on whether the article would be refused if the classification of goods under the HTS code has been changed by Customs officials after the shipment arrives.

(Response) If the FDA Product Code is accurate, then the article will not be refused if the HTS code provided is later changed by CBP during its review of the entry for CBP purposes.

(Comments) One comment asks whether there would be a penalty for canceling and resubmitting a prior notice when the changes that need to be made to the prior notice cannot be made by an amendment or an update.

(Response) FDA has removed the provisions relating to amendments and updates. If required information (with the exception of estimated quantity, anticipated arrival information, and planned shipment information) changes, *e.g.*, the manufacturer is different than the one originally submitted or the complete FDA product code is not accurate, you should cancel the prior notice and must resubmit prior notice (if you still plan to import or offer for import the article of food into the United States). The timeframes set out in § 1.279(a) of the interim final rule will start to run again from the time the new prior notice is confirmed for review by FDA.

a. *Status and movement of refused foods (§ 1.283(a)(2)).* FDA proposed in § 1.278(b) that if an article of food is imported or offered for import is refused under section 801(m)(1) of the FD&C Act, the food shall be held at the port unless directed to a secure facility under proposed § 1.278(c). Proposed § 1.278(d) provided that the person submitting prior notice was responsible for arranging for movement of refused food. Proposed § 1.278(e)(2) stated that refused food could not be delivered under bond to the importer, owner, or consignee. In the preamble to the proposed rule (68 FR 5432), we explained that the provisions in title 19 of the U.S. Code relating to imports for which entry cannot be made would apply.

i. *General order status (§ 1.283(a)(2)(i)).* (Comments) One comment asks for confirmation that the provisions in title 19 of the U.S. Code that apply to unentered merchandise would apply to articles of food that have been refused under section 801(m)(1) of the FD&C Act.

(Response) FDA and CBP generally agree with this comment. However, we have concluded that the interim final rule should specify that these provisions will apply immediately upon refusal under section 801(m)(1) of the FD&C Act because entry of an article of food refused under section 801(m)(1) cannot be made for want of proper documents or other cause, as described in section 490(a)(1)(C) of the Tariff Act of 1930, as amended (19 U.S.C. 1490(a)(1)(C)). Accordingly, § 1.283(a)(2)(i) of the interim final rule specifies that an article of food that has been refused under section 801(m)(1) of the FD&C Act shall be considered general order. Thus, an article of food refused under section 801(m)(1) meets the criteria of general order and must be handled in accordance with sections 490 and 491 of the Tariff Act (19 U.S.C. 1490 and 1491) and CBP's implementing regulations at 19 CFR part 127 except as otherwise specified in 21 CFR part 1, subpart I.

ii. *Locations for holding refused food (§ 1.283(a)(2)(ii)).*

(Comment) One comment suggests using the existing system where shipments may be held in place at the port for 14 days after which they must be moved to general order.

(Response) After merchandise has arrived in the United States, the Customs regulations prescribe a 15-calendar day period during which entry must be made. If entry is not made during this time, the merchandise then must be sent to general order inasmuch as entry has not been completed (see 19 CFR 4.37, 122.50, or 123.10). However, as described previously, this 15-calendar day period is not applicable to articles refused under section 801(m)(1)

of the FD&C Act. Articles that are refused for inadequate prior notice cannot be entered under any form of Customs entry. Those articles may only be entered after adequate prior notice has been given.

(Comments) Several comments express concern about the impact of refusal and holding at the port or secure storage on the quality, value, and marketability of perishable fresh and frozen foods.

(Response) FDA expects that the changes in the interim final rule, in particular the shortened timeframes, will mean fewer refusals. In addition, since FDA will make every effort to review prior notices for refused articles within these same timeframes, those responsible for submitting prior notice have the ability to have the refusal removed in a matter of a few hours. This, too, significantly reduces the impact of the interim final rule on perishables. Finally, FDA also intends to provide guidance to its staff on implementing and enforcing the prior notice requirements, both during the initial transition period and after that period ends.

FDA agrees that appropriate storage and holding conditions must be considered for perishable and frozen foods refused for inadequate prior notice. This means that if the article of food arrives in frozen condition and has been transported under frozen conditions, the facility used for holding the product must provide adequate frozen conditions.

(Comments) Some comments express concern that there are insufficient facilities at the U.S./Mexico ports to handle the potential refusals during the produce season. One commenter disagrees with FDA's statement in the preamble to the proposed rule that ''U.S. Customs has identified a well-established network of storage facilities that are secure.'' The comment pointed out that there is no infrastructure of secure facilities at all ports. A comment noted that there are few facilities at remote East and West ports along the U.S./Canadian border that have temperature controlled environments and are available around the clock. Another comment noted that there generally is a lack of bonded cold storage facilities at borders and at airports. One comment asks for information on the infrastructure of storage facilities that would provide sanitation and temperature controls, as well as security controls, including security against theft and accidents. Some comments ask that FDA publish a list of the secure facilities and the costs that FDA authorizes for the refused food.

(Response) FDA expects that the changes in the interim final rule, in particular the shortened timeframes, will mean fewer refusals and thus less need for storage for refused articles of food. Nevertheless, FDA and CBP agree that the different ranges of storage available at different ports need to be addressed. However, this issue needs to be addressed in light of the determination, reflected in § 1.283(a)(2)(i), that food refused under section 801(m)(1) of the FD&C Act has ''general order'' status. Under customs laws and regulations, general order merchandise must generally be held in a general order warehouse (19 CFR 127.1). Customs regulations also empower the port director, if merchandise requires specialized storage facilities that are unavailable in a bonded facility, to direct the storage of the merchandise by the carrier or by any other appropriate means (see 19 CFR 4.37(f), 122.50(f), or 123.10(f)). Additionally, fruit and other perishables may be held by the port director in a bonded cold-storage warehouse for a reasonable period, if it is probable that entry will be made at an early date (19 CFR 127.28(c)).

FDA and CBP believe that general order storage qualifies as secure facilities for purposes of the Bioterrorism Act, as it is subject to the requirements set out at 19 CFR part 19. In particular, 19 CFR 19.9 contains controls that will ensure that refused food will be adequately controlled while in storage and will not be released from general order storage without CBP authorization.

(Comments) Several comments ask for clarification on secure facilities. Comments ask whether a general-purpose warehouse in a FTZ or a secure facility operated by the importer of record would be considered a secure facility under the rule. Another comment suggests that a clear chain of custody and fiduciary responsibility is required when products are impounded. The comment recommends that appropriate and sufficient impound storage facilities must be available before enforcement begins.

(Response) As set out previously, food refused under section 801(m)(1) of the FD&C Act must be held in accordance with CBP's regulations on general order merchandise.

(Comments) One comment suggests that if there is a failure to submit adequate prior notice, the goods should be allowed to move to the port of destination.

(Response) The prior notice is required to be submitted to and confirmed by FDA before the article of food arrives at the port of arrival. Food refused because of inadequate prior notice must be held within the port of entry for the article unless directed by CBP or FDA. Thus, refused food may be permitted to move to the port of destination.

iii. *Movement of refused food (§ 1.283(a)(2)(iii)).* (Comments) One comment objects to making the carrier responsible by regulation for movement of refused food. One comment suggested that FDA should be responsible for movement of refused foods.

(Response) As set out in the preamble to the proposed rule (68 FR 5431 to 5432), we do not believe that section 801(m) of the FD&C Act mandates that the government take physical control of refused food. Rather, it limits the locations where refused food can be held and to whom it can be delivered. Accordingly, FDA proposed that the carrier or the person who submitted the prior notice arrange for the movement of the refused food. FDA has decided to remove this limitation in the interim final rule. Since we have removed limitations on who can submit, submitters may now be foreign firms that may have difficulty arranging to move food from overseas. We have concluded that we should not impose any limitations on who may arrange for the movement of refused foods. The interim final rule, § 1.283(a)(2)(iii), does maintain the requirement that movement of refused food occur under the appropriate CBP custodial bond. The interim final rule further provides that refused food must be taken directly to the designated facility, shall not be entered, and shall not be delivered to any importer, owner, or ultimate consignee. Failure to observe these conditions will be a violation of the bond and may result in the imposition of liquidated damages.

b. *Segregation of refused foods (§ 1.283(a)(3)).* (Comments) Some comments state that FDA should release to the owner or importer all of the other food or nonfood items in the shipment that are not affected by the inadequate prior notice, in mixed or consolidated shipments, if one or more food items has been refused because of inadequate prior notice. One comment points out that shipments might contain sealed containers of different foods from different sources. One comment asks for clarification on how refused products will be segregated from products that may continue when the products are on a truck or in a rail car. The comment points out that this is a concern for less-

than-truckload (LTL) carriers and small package carriers, who may have thousands of overnight or expedited shipments on one trailer. The comments express concern that importers and carriers of nonfood items and of compliant food items would be unfairly penalized because of a noncompliant entry. A comment states that Customs' regulations authorize different portions of merchandise imported in a single shipment and consigned to a single consignee to be cleared under separate consumption entries (19 CFR 141.52). The Customs regulation in 19 CFR 141.52 also authorizes separate entries for any portions of a shipment that will be covered by different types of entry, such as a bonded warehouse entry.

(Response) FDA agrees. In the preamble to the proposed rule, FDA recognized that food refused under section 801(m)(1) of the FD&C Act may be located in the same container or truck with nonfood items or food that is not refused under section 801(m). However, when mixed or consolidated imported freight contains refused articles of food that must be held, those articles that have been refused must be dealt with in a manner that is consistent with the limitations in section 801(m) of the FD&C Act. Therefore, FDA has added § 1.283(a)(3) to the interim final rule to state that if the article of food that is refused is part of a shipment that contains articles that have not been refused under section 801(m)(1) of the FD&C Act, the refused article(s) may be segregated from the rest of the shipment. This segregation must take place within the port of arrival or where the article is held, if different and may be supervised by FDA or CBP.

c. *Costs (§ 1.283(a)(4)).* (Comments) Several comments ask who would be responsible for storage and transportation costs. One comment notes that the private parties to the importing transaction should be liable for storage and transportation costs when food was refused. One comment stated that the person submitting prior notice should be responsible for these costs. Another comment asks FDA to include a provision in the interim final rule that allows carriers to recover removal, storage, or dispositions costs from the owner, purchaser, or consignee.

(Response) Inasmuch as articles for which adequate prior notice has not been received are considered general order merchandise, the expenses of transportation and storage will be the responsibility of those parties who are responsible under the general order statutes and regulations. FDA has thus decided it is not necessary to include a provision in the interim final rule that specifies which private parties should be responsible for costs associated with refusal. However, we have added § 1.283(a)(4) to the interim final rule to clarify that the U.S. Government is not responsible for these costs.

(Comments) Some comments ask that the regulation establish a damage claim system for losses that occur when perishable foods are detained for administrative reasons. Some comments suggest that FDA should provide compensation for losses, including transportation and storage fees, if the agency mistakenly holds imported product because of an oversight in the government's processing of a prior notice.

(Response) FDA disagrees. The interim final rule provides in § 1.283(a)(4) that neither FDA nor CBP will be responsible for transportation, storage, or other expenses resulting from refusal. FDA notes that it has never assumed responsibility for expenses associated with refusal under the FD&C Act. Any claim against the government arising under these activities shall be governed by the Federal Tort Claims Act.

3. *Post-refusal submissions and resubmissions (§ 1.283(c)).* (Comment) Comments ask FDA to clarify how inadequate notice could be corrected and what steps must be taken to have the product released. One comment suggests that the regulation should state that a shipment with inadequate prior notice would be held only until the prior notice is corrected and that the correction should be required within 24 hours. One comment suggests that food should be held for 24 hours and then deemed released if FDA has not notified the person submitting the notice that the food will be examined.

(Response) FDA agrees that the rule should specify procedures for submitting or resubmitting a prior notice after refusal. These are set out in § 1.283(c)(i) and (c)(ii) in the interim final rule. FDA does not believe it is necessary to impose any limit on how long a person has to submit or correct a prior notice for refused foods since an article of food refused under section 801(m)(1) of the FD&C Act is considered general order merchandise. If no adequate prior notice is received within the timeframes set out in 19 CFR part 127, title in the refused food will vest in the United States and the refused food will be eligible for general order sale or other disposition. Also note that fruit, perishables, or merchandise liable to depreciation, may be characterized as ''special merchandise'' per 19 CFR 127.28. Alternate disposition, consistent with the general order statutes, is then provided for.

The rules governing general order merchandise should be familiar to those in the business of importing food, as they are rules of long standing that are applied by CBP when no entry is made for food. FDA believes that it is up to the persons involved in importing the food into the United States to determine how quickly prior notice should be submitted or resubmitted for food refused under section 801(m)(1) of the FD&C Act.

FDA does not agree that the refusal should be deemed removed if the transmitter does not hear from FDA within 24 hours that FDA will be examining the product. Section 801(m)(2)(B)(i) of the FD&C Act states that refused food may not be released until prior notice has been submitted, reviewed by FDA, and determined by FDA to be adequate.

(Comments) Many comments state that the regulation should set limits on the time FDA has to determine the adequacy of a prior notice submitted after a food has been refused in order to ensure quick release of refused food. One comment explains that such language would be consistent with congressional intent as stated in the Conference Report:

> if an article of food were offered for import without providing the required prior notice, the article of food would be held at the port of entry until the Secretary has determined that notice is complete, but it would not be held longer than the unelapsed period of prior notice unless there is other basis for doing so.

(Conf. Rept. at H2858.)

(Response) FDA agrees in part. The rule provides in § 1.283(c)(iii) that once the prior notice or corrections to a prior notice have been submitted and confirmed by FDA for review, FDA will make every effort to review and respond to the prior notice submission within the timeframes set out in § 1.279(a).

d. *Export after refusal (§ 1.283(a)(5)).* Although export under the general order provisions of the title 19 of the U.S. Code was discussed in the preamble to the proposed rule (68 FR 5432), the proposed rule did not address exportation of food refused under section 801(m) of the FD&C Act.

(Comment) One comment asks whether export would be required for food refused under section 801(m)(1) of the FD&C Act.

(Response) Export is not required for an article of food refused under section 801(m)(1) of the FD&C Act; it is, however, an option for an article of food refused under § 1.283(a) and as permitted under CBP's general order

provisions unless FDA or CBP were to seize or administratively detain the food under other authority. We have added § 1.283(a)(5) to the interim final rule to make this clear. If an article of food that has been refused admission under section 801(m)(1) of the FD&C Act is exported, the prior notice should be cancelled within 5 calendar days of exportation. FDA and CBP note that any time an article of food leaves the country after arriving at the port of arrival, it is considered an export for CBP purposes, and the applicable line or entry is deleted and, if prior notice was transmitted with the entry via ACS, the prior notice will be cancelled as well. This is true regardless of whether the intent is to re-import the article, even if the re-import occurs after a brief period of time.

To import that article of food, the prior notice must be re-submitted, and a new entry must be made, and the new prior notice will have the effect of ''restarting the clock'' in terms of when the prior notice has been submitted to FDA. If prior notice had been transmitted via the FDA Prior Notice System Interface, the prior notice is not automatically canceled when the article of food is exported. The only way to cancel a prior notice that was transmitted via the FDA Prior Notice System Interface is to use that system to explicitly cancel the prior notice.

e. *Abandoned merchandise (§ 1.283(a)(6)).* (Comment) One comment states that the regulation should address what happens if refused food is not claimed by the owner, purchaser, or consignee.

(Response) The interim final rule, in § 1.283(a)(6), provides that if no prior notice or correction is received in a timely fashion or export has not occurred, the food shall be dealt with as set forth in CBP regulations relating to be general order merchandise, except that it may only be sold for export or destroyed as agreed to by CBP and FDA.

5. International Mail (§ 1.283(e))

Although the proposed rule applied to food imported or offered for import by mail, *see, e.g.*, 68 FR 5436, there were no proposed provisions specific to refusal of food arriving by international mail.

(Comments) No comments submitted comments specific to refusal of food arriving by international mail were submitted.

(Response) FDA believes that separate refusal procedures are necessary for food arriving by mail given differences between mail and cargo. FDA believes that these procedures are authorized under section 701(b) of the FD&C Act because they are necessary to ensure that the refusal provisions of section 801(m)(1) of the FD&C Act can be efficiently and effectively applied to food that arrives by mail. The interim final rule thus provides in § 1.283(e) that in the case of food arriving by international mail with inadequate prior notice, the parcel will be held by CBP for 72 hours for FDA inspection and disposition. If the parcel is refused and there is a return address, the article may be returned to sender stamped ''No Prior Notice—FDA Refused.'' If there is no return address or FDA determines that the articles of food in the shipment appear to present a hazard, FDA may dispose of or destroy the parcel at its expense. If FDA does not respond within 72 hours of the CBP hold, CBP will return the parcel to the sender or, if there is no return address, destroy the parcel, at FDA expense.

2. Food Carried by or Otherwise Accompanying an Individual (§ 1.283(b))

Although the proposed rule applied to food imported or offered for import in baggage that was not brought in by a traveler for personal use, there were no proposed provisions specific to refusal of food in baggage in the proposed rule.

(Comments) No comments submitted comments specific to refusal of food carried by or otherwise accompanying an individual.

(Response) FDA believes that separate refusal procedures are necessary for food carried by or otherwise accompanying an individual given differences between these kinds of imports and cargo. FDA believes that these separate procedures are authorized under section 701(b) of the FD&C Act because they are necessary to ensure that the refusal provisions of section 801(m)(1) of the FD&C Act can be efficiently and effectively applied to food carried by or otherwise arriving with an individual.

(Interim final rule) Section 1.279(f) provides that the individual who carries or is accompanied by food must have a copy of the confirmation of prior notice when arriving in the United States. Section 1.283(b) provides that if there is inadequate prior notice or the individual cannot provide FDA or CBP with a copy of the PN confirmation, the article of food is subject to refusal. If before leaving the port, the individual cannot arrange to have the refused food held at the port or exported, the article of food may be destroyed.

4. FDA Review After Refusal, § 1.283(d)

(Comments) Several commenters suggest there should be an efficient appeal mechanism in the event that the submitter, importer, owner, or consignee believes that food products have been inappropriately refused and held.

(Response) Although such a process is not required by § 801(m) of the FD&C Act, FDA agrees that having a review process designed to address prior notice issues is warranted. Section 1.283(d) of the interim final rule sets out parameters under which a request may be submitted to obtain FDA review of whether the article is subject to the requirements of this subpart under § 1.276(b)(5) (*i.e.*, meets the interim final rule's definition of food) or § 1.277 (*i.e.*, is within the scope of the interim final rule) or whether the contents of a prior notice submission were accurate. The interim final regulation provides that a request must be submitted within 5 days of refusal and that FDA will respond within 5 days. FDA notes that if the product is perishable, the sooner the request is submitted, the sooner FDA will respond. FDA chose these timeframes because they are consistent with the timeframes for perishables contemplated under the new administrative detention provisions at § 304(h) of the FD&C Act, 21 U.S.C. 334(h). After review, if FDA determines that the article is not subject to prior notice or that the prior notice submission is accurate, it will notify the requester, the transmitter, and CBP that the food is no longer subject to refusal under section 801(m)(1) of the FD&C Act.

5. Prohibition on Delivery Outside of the Port, § 1.283(f)

(Comments) One commenter suggests following existing procedures and allowing refused foods to be held at the importer's place of business, quarantined and considered to be undeliverable, but held for sampling and release. Another commenter asks for clarification on whether product could be shipped to the importer, purchaser, or consignee's facility, if prior notice is inadequate.

(Response) The statute explicitly states that an article of food that is refused under the provisions of section 801(m)(1) must be held and shall not be delivered to the importer, owner, or consignee. See § 801(m)(2)(B)(i). Thus, the provisions of the Bioterrorism Act specifically override certain existing procedures that apply when food is subject to refusal under § 801(a) of the FD&C Act. In accordance with the new procedures specified in the Bioterrorism Act, § 1.283(de) of the interim final rule provides that, notwithstanding § 801(b) of the FD&C Act, 21 U.S.C. 381(b), an

article of food refused under § 801(m)(1) may not be delivered to the importer, owner, or ultimate consignee or transferred by any person from the port or secure facility until prior notice is submitted to FDA in accordance with this subpart, FDA has examined the prior notice, FDA has determined that the prior notice is adequate, and FDA has notified CBP and the transmitter that the article of food no longer is subject to refusal of admission under § 801(m)(1) of the FD&C Act. After this notification, entry may be made in accordance with law and regulation.

6. Relationship to Admissibility (§ 1.283(g))

The proposed rule (§ 1.278(f)) differentiated between a refusal of admission under section 801(m)(1) of the FD&C Act (prior notice) and refusal of admission under section 801(a) of the FD&C Act or other U.S. laws. The proposed rule clarified that a determination that an article of food is no longer subject to refusal of admission under section 801(m)(1) of the FD&C Act does not mean that it will be admitted to the United States under other provisions of the law that apply to admissibility determinations.

(Comments) One comment asks for clarification on whether a shipment will have to remain at the port and be subject to inspection until after FDA receives and reviews the entry documentation through OASIS. The comment points out that in most cases, OASIS review occurs after the goods have at least been conditionally released. Other comments state FDA should conduct its review under section 801(a) of the FD&C Act at the same time it is doing its prior notice review. Another comment asks what would happen if a prior notice was determined to be inadequate as part of FDA's review under section 801(a) of the FD&C Act.

(Response) Section 1.283(g) provides that FDA's determination that an article of food is no longer refused under section 801(m)(1) of the FD&C Act is different than, and may come before, determinations of admissibility under other provisions of the FD&C Act or other U.S. laws. As a general matter, FDA intends to use prior notice information to determine what products should be inspected upon arrival; we do not intend to make admissibility decisions under section 801(a) of the FD&C Act until entry has been made. The refusal under section 801(m)(1) of the FD&C Act will be removed after prior notice has been received, reviewed, and responded to by FDA, and there will be no further requirement to hold at the port for purposes of section 801(m). As a general matter, at that point, the procedures under section 801(a) and (b) of the FD&C Act would apply. If FDA discovers that prior notice was inadequate after an article leaves the port of arrival but before it makes a decision to ''may proceed'' or release an article of food under section 801(a) of the FD&C Act, FDA may refuse the article under section 801(m)(1) and ask CBP to issue a notice of redelivery.

Interim Final Rule (§ 1.283)

FDA revised the proposed rule to provide for more specificity, clarify the status of refused food, and provide a mechanism for FDA review after refusal. In the interim final rule, FDA identifies the consequences and procedures for the following situations:

a. *Inadequate Prior Notice (No, inaccurate, or untimely prior notice) (§ 1.283(a)(1)).* The article is subject to refusal under section 801(m) and, if refused, unless immediately exported with CBP concurrence, must be held.

b. *Status and movement of refused food (§ 1.283(a)(2)).* A refused article of food shall not be delivered to the importer, owner, or ultimate consignee until FDA has examined the prior notice, determined the adequacy of the prior notice and notified the transmitter and CBP that the article of food covered by the prior notice is no longer refused. A refused food is considered general order merchandise under section 490 of the Tariff Act of 1939, as amended. The refused food must be moved under appropriate custodial bond. FDA must be notified of the location where the food has been or will be moved within 24 hours of refusal. The food must be taken directly to the designated location, shall not be entered, and shall not be delivered to any importer, owner, or ultimate consignee.

c. *Segregation (§ 1.283(a)(3)).* If a refused food is part of a shipment that contains other articles, the refused food may be segregated from the rest of the shipment within the port of arrival or where it is held, if different. FDA or CBP may supervise the segregation.

d. *Costs (§ 1.283(a)(4)).* Neither FDA nor CBP will be liable for transportation, storage, or other expenses resulting from refusal.

e. *Post-refusal submissions and resubmissions (§ 1.283(c)).* If an article of food is refused for no or inaccurate prior notice, the prior notice must be submitted to and confirmed by FDA for review.

f. *Export after refusal (§ 1.283(a)(5).* A refused food may be exported with CBP concurrence and supervision. If a refused food is exported, the prior notice should be cancelled within 5 days of exportation.

g. *No post refusal submission or request for review (§ 1.283(a)(6).* If no prior notice, correction, or request for FDA review is submitted in a timely fashion after an article of food is refused, the food will be dealt with as set forth in CBP regulations relating to general order merchandise. It may only be sold for export or destroyed as agreed to by CBP and FDA.

h. *International mail (§ 1.283(e)).* In the case of food arriving by international mail, if prior notice is inadequate, the article will be held by CBP for 72 hours for FDA inspection and disposition. If the article of food is refused and there is a return address, the parcel may be returned to sender. If there is no return address or the article of food in the parcel appears to present a hazard, FDA may dispose of or destroy it at FDA's expense. If FDA does not respond within 72 hours of the CBP hold, CBP will return the parcel back to the sender or, if there is no return address, may destroy the parcel at FDA's expense.

i. *Food carried by or otherwise accompanying an individual (§ 1.283(b)).* The individual must have a copy of the confirmation when entering the United States. If there is inadequate prior notice, the article will be refused entry and may be held at the port or exported. If arrangements for holding or export cannot be made, the food may be destroyed.

j. *FDA review after refusal (§ 1.283(d)).* After refusal, the submitter, importer, owner, or ultimate consignee may submit a written request asking FDA to review whether the article is subject to the requirements of this subpart under §§ 1.276(b)(5) and 1.277, or whether the prior notice submission is accurate. The interim final rule also sets out procedures and timeframes for this review process.

k. *Prohibition on delivery outside of the port (§ 1.283(f)).* A refused article of food may not be delivered to the importer, owner, or ultimate consignee until FDA has examined the prior notice, determined the adequacy of the prior notice and notified the transmitter and CBP that the article of food covered by the prior notice is no longer refused. When food that has been refused under section 801(m)(1) of the FD&C Act is held at the port or secure facility, it may not be transferred by any person from the port or secure facility until prior notice is submitted to FDA in accordance with this subpart, FDA has examined the prior notice, FDA has determined that the prior notice is adequate, and FDA has notified CBP

and the transmitter that the article of is food no longer refused.

l. *Relationship to admissibility (§ 1.283(g)).* A determination that an article of food is no longer subject to refusal under section 801(m)(1) of the FD&C Act is different than, and may come before, determinations of admissibility under other provisions of the FD&C Act or other U.S. laws. A determination that an article of food is no longer subject to refusal under section 801(m)(1) of the FD&C Act does not mean that it will be granted admission under other provisions of the FD&C Act or other U.S. laws.

6. What Are the Other Consequences of Failing To Submit Adequate Prior Notice or Otherwise Failing To Comply With This Subpart? (§ 1.284)

In accordance with section 301(ee) of the FD&C Act, the proposed rule (§ 1.278(g)) provided that it is a prohibited act to import or offer for import an article of food without complying with the requirements of section 801(m) of the FD&C Act, or otherwise to violate any requirement under section 801(m). In addition, the proposed rule provided that the United States can bring a civil action in Federal court to enjoin persons who commit prohibited acts and bring a criminal action in Federal court to prosecute persons who commit prohibited acts. In addition, under 21 U.S.C. 335a, FDA can seek debarment of any person who has been convicted of a felony relating to importation of food into the United States.

(Comments) Some comments ask that FDA provide a transition period for implementing the regulation, during which a submitter would not be prosecuted for providing inadequate or incomplete prior notice.

(Response) The requirements of the statute do not allow for this kind of a transition period. FDA will, however, provide guidance on enforcement to its staff containing the agency's policies on injunctions, prosecution, and debarment related to failure to provide timely and accurate prior notice, as well as the agency's policies regarding refusals under section 801(m)(1) of the FD&C Act and holds under section 801(l). FDA intends to include a transition period in this guidance, during which it will emphasize education to achieve compliance. While FDA will nonetheless be authorized to take various types of enforcement action for violations of the prior notice requirements, this planned transition period will allow FDA to focus its resources on the most appropriate circumstances. While this transition period is important, FDA also intends to provide guidance to its staff on enforcing the prior notice requirements after a transition period. These guidance documents will be made available to the public, and FDA will publish a notice of availability in the **Federal Register**.

This enforcement discretion with regard to refusals of foods under 801(m) and 801(l) will not impact FDA's ability to take other actions that may be necessary, such as conducting inspections for food safety and security concerns, determining whether an article of food is subject to refusal under section 801(a) of the FD&C Act at the port of entry, or taking any other action under the FD&C Act. FDA may consider the failure to provide prior notice as a factor in determining whether to examine the product at destination. In addition, it will not impact upon CBP's ability to assess penalties under 19 U.S.C. 1595a(b) or to take enforcement action under any other authority.

(Interim final rule) Section 1.284 of the interim final rule establishes a separate provision to cover the other consequences of failing to submit adequate prior notice or otherwise comply with 21 CFR part 1, subpart I. The interim final rule provides that the failure of a person who imports or offers for import an article of food to submit prior notice is a prohibited act under section 301(ee) of the FD&C Act (21 U.S.C. 331(ee)). The interim final rule also sets out the civil, criminal, and debarment actions that the United States may bring against persons who commit a prohibited act.

K. "What Happens to Food That Is Imported or Offered for Import From Unregistered Facilities That Are Required To Register Under 21 CFR Part 1, Subpart H?" (§ 1.285)

As set out in the preamble to the interim final rule on registration of food facilities under section 415 of the FD&C Act, FDA has decided to include in the prior notice interim final rule the provisions that address what happens when imports from unregistered foreign food facilities arrive at the port. FDA decided this course was most appropriate because, in the first instance, we will be using the prior notice review process to ensure that foreign food facilities are registered. Moreover, FDA believes that the procedures for dealing with food from unregistered foreign facilities should be, as they were in the proposed registration rule, identical in most respects to the prior notice procedures, and thus it makes sense to consolidate them in one regulation.

(Comments) Comments on the registration proposed rule are described in the preamble to the interim final registration rule, published elsewhere in this issue of the **Federal Register**.

(Response) Responses to comments on the registration proposed rule are described in the preamble to the interim final registration rule, published elsewhere in this issue of the **Federal Register**.

7. Interim Final Rule (§ 1.285)

FDA revised the proposed rule to provide for more specificity, to clarify the status of food under hold, and to provide a mechanism for FDA review after a hold is imposed.

a. *Failure to register (§ 1.285(a) and (b)).* If an article of food from a foreign manufacturer that is not registered as required under section 415 of the FD&C Act (21 U.S.C. 350d) and 21 CFR part 1, subpart H, is imported or offered for import into the United States, the food is subject to refusal of admission under section 801(m)(1) of the FD&C Act and 21 CFR 1.283(a) for failure to provide adequate prior notice. The failure to provide the correct registration number of any foreign manufacturer if registration is required under section 415 of the FD&C Act and 21 CFR part 1, subpart H, renders the identity of that facility incomplete.

If an article of food from a foreign facility that is not registered as required under section 415 of the FD&C Act and 21 CFR part 1, subpart H, is imported or offered for import, it is subject to a hold within the port of entry for the article unless directed by CBP or FDA under section 801(l) of the FD&C Act unless exported.

b. *Status and movement of held food.* An article of food under hold is considered general order merchandise under section 490(a) of the Tariff Act of 1930, as amended. The food must be moved under appropriate custodial bond. FDA must be notified of the location where the food has been or will be moved within 24 hours of the hold. It must be taken directly to the designated facility, shall not be entered, and shall not be delivered to any importer, owner, or ultimate consignee.

c. *Segregation (§ 1.285(d)).* If a food placed on hold is part of a shipment that contains other articles, the food may be segregated from the rest of the shipment within the port of arrival or where the article is held, if different.

d. *Costs (§ 1.285(e)).* Neither FDA nor CBP will be liable for transportation, storage, or other expenses resulting from a hold.

e. *FDA review after hold (§ 1.285(j)).* After an article of food has been placed

on hold, prior notice submitter, the importer, owner, or ultimate consignee may submit a written request asking FDA to review whether the foreign facility is subject to the requirements of section 415 of the FD&C Act. The interim final rule also sets out procedures and timeframes for this review process.

f. *Export after refusal (§ 1.285(f)).* A food under hold may be exported with CBP concurrence and supervision.

g. *No registration or request for review (§ 1.285(g)).* If no registration number is obtained from FDA or no request for FDA review is submitted in a timely fashion after a food is placed under hold, the food will be dealt with as set forth in CBP regulations relating to general order merchandise. It may only be sold for export or destroyed as agreed to by CBP and FDA.

h. *International mail (§ 1.285(k)).* In the case of food arriving by international mail, if required registration is lacking, the article will be held by CBP for 72 hours for FDA inspection and disposition. If the food is held and there is a return address, the parcel may be returned to sender. If there is no return address or the article of food in the parcel appears to present a hazard, the FDA may dispose of or destroy it, at FDA's expense. If FDA does not respond within 72 hours of the CBP hold, CBP may return the parcel to the sender or, if there is no return address, destroy the parcel at FDA's expense.

i. *Food carried by or otherwise accompanying an individual (§ 1.285(h)).* If placed on hold, the individual may arrange to have the food held at the port or exported. If such arrangements cannot be made, the food may be destroyed.

j. *Post-refusal and post-hold submissions (§ 1.285(i)).* To resolve a refusal if an article of food has been refused under § 1.285(a), the facility must be registered and a registration number obtained from FDA. The prior notice must then be submitted in accordance with § 1.283(c).

To resolve the hold if an article of food is held under § 1.285(b) the foreign facility must be registered and a registration number obtained from FDA. FDA must be notified of the applicable registration number in writing by mail, express courier, fax, or e-mail. The notification must provide the name and contact information for the person providing the registration information. The location for delivering this notification will be listed at *http://www.fda.gov*—see Food Facility Registration. If FDA determines that the food should no longer be held, it will notify the person providing the information and CBP the food is no longer subject to hold under section 801(l).

k. *Prohibition on delivery outside of the port (§ 1.285(l)).* An article of food under hold may not be delivered to the importer, owner, or ultimate consignee or transferred by any person from the port or the secure facility until registration is complete and FDA has notified CBP that the article of food is no longer under hold.

l. *Relationship to other admissibility provisions (§ 1.285(m)).* A determination that an article of food is no longer subject to hold under section 801(l) of the FD&C Act is different than, and may come before, determinations of admissibility under other provisions of the FD&C Act or other U.S. laws. A determination that an article of food is no longer subject to hold under section 801(l) does not mean that it will be granted admission under other provisions of the FD&C Act or other U.S. laws.

IV. Issuance of an Interim Final Rule and Effective Date; Comments

We are issuing this rule as an interim final rule, with an opportunity for public comment. Although we are seeking comment on this interim final rule, it will be in effect on December 12, 2003. Thus, its requirements will be in effect and have the force and effect of law from that date until they are modified by the issuance of a final rule. FDA will, however, provide guidance on enforcement to its staff containing the agency's policies on injunctions, prosecution, and debarment related to failure to provide timely and accurate prior notice, as well as the agency's policies regarding refusals under section 801(m)(1) of the FD&C Act and holds under section 801(l). FDA intends to include a transition period in this guidance, during which it will emphasize education to achieve compliance. While FDA will nonetheless be authorized to take various types of enforcement action for violations of the prior notice requirements, this planned transition period will allow FDA to focus its resources on the most appropriate circumstances.

The comment period on this interim final rule will open today for a period of 75 days. Moreover, to ensure that those that comment on this interim final rule have had the benefit of our outreach and educational efforts and have had experience with the systems, timeframes, and data elements, FDA intends to reopen the comment period for an additional 30 days in March 2004. In addition, this date will coincide with the issuance of the plan by FDA and CBP relating to timeframes.

FDA invites public comment on this interim final rule. The agency will consider modifications to this interim final rule based on comments made during the comment period. Interested persons may submit to the Division of Dockets Management (*see* **ADDRESSES**) written or electronic comments regarding this interim final rule by [75 days after December 12, 2003.]. Two copies of any comments are to be submitted, except that individuals may submit one copy. Submit one electronic copy. Submit electronic comments to *http://www.fda.gov/dockets/ecomments*.

Comments are to be identified with the docket number found in brackets in the heading of this document. Received comments may be seen in the Division of Dockets Management between 9 a.m. and 4 p.m., Monday through Friday.

As noted, this regulation is effective on December 12, 2003. FDA will address comments received and confirm or amend the interim final rule in a final rule. The agency, however, will not consider any comments that have been previously considered during this rulemaking.

V. Analysis of Economic Impacts

A. Final Regulatory Impact Analysis

FDA has examined the economic implications of this interim final rule as required by Executive Order 12866. Executive Order 12866 directs agencies to assess all costs and benefits of available regulatory alternatives and, when regulation is necessary, to select regulatory approaches that maximize net benefits (including potential economic, environmental, public health and safety, and other advantages; distributive impacts; and equity). Executive Order 12866 classifies a rule as significant if it meets any one of a number of specified conditions, including: Having an annual effect on the economy of $100 million, adversely affecting a sector of the economy in a material way, adversely affecting competition, or adversely affecting jobs. A regulation is also considered a significant regulatory action if it raises novel legal or policy issues. FDA has determined that this interim final rule is a significant regulatory action as defined by Executive Order 12866.

Comments on the economic analysis of the proposed prior notice rule covered several major issues, including: The costs estimated to learn the rule, the costs to coordinate prior notice information, the costs of filing through a broker, and the costs of delayed arrival (including truck time costs and the costs

for lost value of products). We address all comments relevant to the economic analysis in detail as each issue appears in the analysis.

1. Need for Regulation

Section 307 of the Bioterrorism Act of 2002 requires prior notice of all food imported or offered for import into the United States. If FDA fails to issue a final regulation by December 12, 2003, section 307 of the Bioterrorism Act provides for a default minimum period of advance notice that is not fewer than 8 hours and not more than 5 days before an article of food is imported or offered for import into the United States. This regulation is needed to implement the statutory provisions.

2. Interim Final Rule Coverage

Unless excluded, this interim final rule applies to all FDA-regulated food for human and animal consumption that is imported or offered for import into the United States. This includes food that is imported for export, food transshipped through the United States to another country, and food for use in an FTZ. This interim final rule does not apply to food that is imported then exported from the port of arrival without leaving the port; meat, poultry, or egg products that are under the exclusive jurisdiction of USDA; food carried by or otherwise accompanying an individual when entering the United States for personal use. For the purpose of this rule, the definition of food does not include food contact substances (including food packaging), pesticide chemicals, or pesticide chemical residues.

As required by the Bioterrorism Act, the notification must provide the identity of the article, manufacturer, shipper, and grower (if known), the FDA Country of Production, the country from which the article is shipped, and the anticipated port of arrival. In addition, the notification must provide the identity of the person who submits and transmits the prior notice, the importer, the owner, the consignee, the carrier, the CBP entry identifier, anticipated time and date of arrival, anticipated shipment information, and, if the food has been refused admission and required to be held, the location where it is held.

For food shipments arriving in the United States through international mail, notification of the import must be sent before the article is mailed. Only the prior notice information that is relevant to that type of shipment must be submitted for articles of food arriving by international mail. Notification of mail entries will be received only through the FDA PN System Interface. For food carried by or otherwise accompanying an individual when entering the United States that is not for personal use, such as food for sale that is brought into the United States in baggage, prior notice must be submitted through the FDA PN System Interface.

a. *Number of establishments affected*. Using 2001 fiscal year information from OASIS (industry codes 02 through 52, 54, and 70 through 72), FDA has estimated that there are 77,427 importers and consignees who receive imported food shipments. Commenters were concerned that this importer number represented only importers of edible food products, and not such items as food packaging. These commenters concluded that FDA's estimate was too low. OASIS does include all importers of food, for both humans and animals, and food-related items and therefore does not underestimate the number of food importers. Also, because food contact substances, including food packaging, are excluded from interim final rule coverage, our estimate of importers should sufficiently account for food importers that might not have been formally captured by the OASIS data.

Comments also indicated that they wanted an expansion of the persons allowed to submit prior notice. The proposed rule had restricted the submission of prior notice to U.S. importers or U.S. purchasers (or their brokers). For the interim final rule, FDA has authorized the submission of prior notice by any person.

Using information from the OASIS system, FDA has determined that there are approximately 100,000 foreign manufacturers/processors of an article of food. We assume here that foreign manufacturer/processor costs associated with this interim final rule will be spread across the supply chain; we therefore do not directly address the distribution of costs. We think it probable, however, that most of the ongoing costs of this interim final rule will be borne by consumers in the form of higher retail food prices.

i. *New and closing importer establishments*. In addition to the U.S. importers currently operating, in future years some new import businesses will open and some existing import businesses will close. According to the Small Business Administration, in 2001 about 10 percent of all businesses were new and 10 percent of all businesses closed. These new importers will have to become familiar with the FDA prior notice system, and some may need to obtain computer equipment and Internet access to comply with prior notice requirements.

ii. *Baseline*. FDA considers the baseline for this analysis the state of the world before the Bioterrorism Act, and we assume this baseline has zero costs and benefits.

b. *Current state of the world*. The majority of the information that will be required by section 307 of the Bioterrorism Act now is supplied at the time of entry by a customs broker or self-filer, and usually is submitted electronically. Although importers already must notify CBP of entries, the Bioterrorism Act requires notification to FDA before the food shipment reaches the U.S. port of arrival. This requirement will change the current practice of notifying CBP and then subsequently FDA upon arrival (and as long as 15 days past arrival based on the time the consumption entry may be filed with CBP).

OASIS showed that approximately 2.9 million food entry lines were imported via sea and air transportation in fiscal year 2002. Information on food-importing practices indicates that importers bringing food products into the United States by vessel notify CBP and FDA before their arrival. Importers using vessels as their mode of transport for products can notify CBP well in advance of the actual shipping date, but CBP will not certify the entry until 5 days before the vessel is expected to dock at a U.S. port. FDA is notified of the shipment then, through CBP, as early as 5 days before the vessel's arrival at a U.S. port.

Importers bringing food products in by airplane can notify CBP of their intent to import food into the United States no more than 24 hours before the scheduled flight departure time, but cannot certify their cargo manifests with CBP until the airplane has taken off from the airport of the exporting country (''wheels-up''). FDA is notified after ''wheels up'', once the import entry has been filed and certified by CBP. CBP has informed FDA that they receive flight information for 87.6 percent of the flights at the time of ''wheels up.''

OASIS showed that around 2.3 million entry lines of food were imported into the United States via ground transportation in fiscal year 2002. The usual practice today for food brought in by truck or train (products coming directly from Canada or Mexico) is not to notify CBP until arrival. (Filers can certify their entry data up to 24 hours before arrival, but CBP does not give a ''screening response'' to the entry until actual arrival.) Even though these importers likely have the orders and invoices for these products in advance,

they do not currently notify CBP until the arrival of the food or thereafter.

The constraints prior notice places on those wishing to import food into the United States depend on: When the order for the product is placed, the minimum prior notice submission time, and the manufacturing/processing or other location where the product to be imported is held before importing into the United States. A longer prior notice submission time would change more business practices for food operations nearer to the U.S. border than for those farther away from the United States. For example, an 8-hour prior notice minimum timeframe will not significantly affect most food shipments imported from China, because they are likely to come by sea or by air and the length of the journey by either mode of transportation is longer than 8 hours. If the food to be imported is instead located in Mexico or Canada, and the prior notice submission timeframe is 8 hours, there is a greater likelihood that the food is located less than 8 hours driving time from the U.S. border, and transporting some shipments to the U.S. buyer of the product within a specified time would be much more difficult. Whereas there is no expectation that a product ordered from China will arrive in the United States in 8 hours, in the case of some products from Mexico or Canada, normal business practices do include the expectation of a quick or rushed delivery to a U.S. destination; this expectation may not be met for some prescribed minimum prior notice submission timeframes.

Given the standard importing business practices described in the previous paragraphs, and given the restraints that prior notice places on food importers using land transportation (and in some cases air transportation), we classify options for this analysis by minimum prior notice time based on costs for those shipments of imported food that arrive in the United States by ground and, in longer minimum submission time options, by air transportation as well. Therefore, while we include food shipments imported by vessel in the learning, coordinating, and submitting costs of each option considered, we do not calculate a lost product value or waiting time for products arriving by vessel because they are not constrained by the minimum prior notice timeframes considered in any of the options. Highly perishable food products are generally not imported to the United States by sea.

3. Regulatory Options Considered

Comments on the estimates used in the analysis of the proposed rule indicated that FDA should reexamine the following factors: (1) The time it takes to learn about the prior notice rule; (2) the time it takes to coordinate information for prior notice submission; (3) the number of entries expected yearly; (4) the lost value for perishable products; (5) the cost of carrier waiting time; and (6) the costs to current BRASS users. These comments have led FDA to assess additional options, and revise the estimated costs for other options.

We analyzed 12 options for a prior notice regulation. Each option covers all food subject to the interim final rule that is imported to the United States; the mode of transportation for the food is specifically addressed in options where minimum prior notice time constrains importation:

Option 1. Current state of the world, pre-Bioterrorism Act (baseline).

Option 2. Prior notice time of 1 hour (constrained by shipments arriving by land modes of transport); electronic submission of information. This option would require the persons responsible for all food imported or offered for import into the United States to notify FDA of their intent to import articles of food through an importer, customs broker, purchaser, or other agent. This option applies to all imported foods subject to the interim final rule. Submission of prior notice information must be electronic. Any change in prior notice information requires resubmission of corrected or new information.

Option 3. Require all components of option 2, but lengthen the minimum prior notice time to 2 hours (constrained by shipments arriving by land transportation modes).

Option 4. Require all components of option 2, but lengthen the minimum prior notice time to 4 hours (constrained by shipments arriving by air and land modes of transport); electronic submission of information.

Option 5. Require all components of option 2, including a 1-hour minimum prior notice time for vehicles, but lengthen the minimum prior notice time to 4 hours for articles of food arriving by train and by air, and 8 hours for articles of food arriving by vessel; electronic submission of information.

Option 6. Require all components of option 2, but lengthen the minimum prior notice time to 2 hours for articles of food arriving by vehicle, 4 hours for articles of food arriving by train and by air, and 8 hours for articles of food arriving by vessel; electronic submission of information (interim final rule).

Option 7. Require all components of option 4, but allow some prior notice information to be revised 1 hour before arrival at a U.S. port.

Option 8. Require all components of option 2, but lengthen the minimum prior notice time to 8 hours (statutory self-executing provision).

Option 9. Require all components of option 7, but allow some prior notice information to be revised 1 hour before arrival at a U.S. port.

Option 10. Require all components of option 2, but lengthen the prior notice time to 12 noon of the calendar day before crossing the U.S. border.

Option 11. Require all components of option 9, but allow some prior notice information to be revised 1 hour before arrival at a U.S. port.

Option 12. Require all components of option 9, but allow some prior notice information to be revised 2 hours before arrival at a U.S. port (proposed rule).

a. *Option 1: Current state of the world, pre-Bioterrorism Act*. Having no prior notice requirements is option 1 in our analysis. The Bioterrorism Act requires that FDA issue prior notice regulations or default times take effect, so this option is not legally viable. The OMB cost-benefit analysis guidelines recommend discussing statutory requirements that affect the selection of regulatory approaches. These guidelines also recommend analyzing the opportunity cost of legal constraints that prevent the selection of the regulatory action that best satisfies the philosophy and principles of Executive Order 12866. This option will serve as the baseline against which other options will be measured for assessing costs and benefits.

b. *Option 2: Minimum prior notice timeframe of 1 hour; electronic submission of information; any change in information requires resubmission*—i. *Costs*—(1) *Learning costs*. The party responsible for submitting prior notice to FDA will incur administrative and notification costs to comply with this regulation. The responsible party likely will become aware of the prior notice requirement through normal business activities: reading the trade press, reading industry news, FDA outreach, trade outreach, or conversations with other business operators who also must comply with prior notice. Once the submitter of the information becomes aware of the regulation, he or she will need to learn the requirements of the regulation, which will require finding a copy of the prior notice requirements and reading and understanding them.

In response to comments received, FDA has re-estimated the costs of learning about the prior notice regulation. Comments said that the FDA underestimated the learning costs in the

proposed rule, because of the large change in business practices. According to the comments, the importer, depending upon its size, will have at least two trained filers for CBP and FDA-related entries. Commenters also stated that it is quite likely that an entire brokerage staff, including supervisors, will need to understand the FDA prior notice system.

Some comments suggested that the estimated 1 and 2 hour learning time for the rule would in fact be an all day training event. Comments recalled having a daylong seminar to learn about OASIS when it was introduced. In response to the information these comments submitted, in this final analysis, FDA assumes that one manager and two subordinates from each importing business will attend an 8-hour training session on the prior notice regulation.

FDA used wage rates from the Bureau of Labor Statistics National Compensation Survey (Ref. 3), doubled to include overhead costs, to estimate the cost of the time to learn the prior notice requirement. For an administrative worker, the cost per hour is $25.10: for a manager, $56.74. FDA assumes that two administrative workers and one manager will be trained for 8 hours each on the prior notice requirements. As shown in table 1B of this document, total costs of this learning activity are about $66 million for the first year.

Given the 10 percent turnover in business reported by the Small Business Administration, FDA expects 10 percent of the total search costs to be incurred in each subsequent year after prior notice is in effect as new firms enter the industry. This cost is also shown in table 1B of this document.

TABLE 1B.—COST TO LEARN ABOUT THE PRIOR NOTICE REQUIREMENTS

	Manager cost	Administrative worker cost (two workers)
Number of firms	77,427	77,427
Wage rate per hour for manager and administrator Worker (including overhead)	$56.74	$25.10
1-day learning seminar	* 8	* 8
First year one time learning costs	$35,145,664	$31,094,684
Total first year learning costs	.....	$66,240,000
Annual learning costs for new entrants	.....	$6,624,000

* Hours.

(2) *Computer acquisition costs.* Both the Produce Marketing Association (PMA) and the National Food Processors Association (NFPA) submitted comments to FDA before FDA published the proposed rule that indicated that about 96 percent of the food industry has readily available Internet access. The American Feed Industry Association, which represents animal food manufacturers, also agreed with NFPA's estimate that 96 percent of the food industry has electronic transmitting capacity.

Since all prior notices must be submitted electronically, we estimate that there are 3,097 responsible parties without Internet access (4 percent of the 77,427 importers). These persons will have to purchase a computer and gain Internet access to transmit the information via a prior notice screen. This one-time computer cost and a recurring Internet access cost for these facilities are shown in table 2 of this document.

Again, given a 10 percent turnover rate for businesses in the import industry, we expect there to be new businesses in the future that may need to purchase electronic transmitting capabilities. With the passage of time, persons will likely purchase this computer equipment in the ordinary course of business, not solely to comply with prior notice. We include an estimate of this cost for new entrants to ensure that we do not underestimate the costs of electronic transmitting capacity.

A few comments indicated that they did not agree with the estimated cost for Internet access; they stated that the cost would be higher. Since FDA will be receiving most prior notices through ABI/ACS, which is an electronic submission system, and since the FDA PN System Interface will be used for mail and other non-ABI/ACS transmissions and is Web-based, FDA does not agree that Internet access rates should be estimated at a higher rate.

TABLE 2.—FACILITIES AND RESPONSIBLE PARTIES WITHOUT INITIAL INTERNET ACCESS

Number of facilities	3,097
Computer equipment cost per facility	$2,000
Annual cost of Internet access ($20 per month × 12)	$240
Search costs for equipment and access ($25.10 × 8 hours)	$201
Total First Year One Time Cost of Electronic Transmitting Capacity	$7,559,777
Annual one time cost of electronic transmitting capacity for firms entering industry in subsequent years	$755,978

(3) *Annual costs to submit prior notice entry lines.* FDA used OASIS information to determine that about 5.2 million entry lines of food were imported into the United States in fiscal year 2002, including formal mail and express carrier (*e.g.*, Federal Express) entries. An ''entry line'' is an FDA term used by OASIS, which refers to a line on an invoice that reflects a certain article specific to manufacturer/processor or packaging: *e.g.*, 100 cases containing 48, 6-oz cans of tuna.

Comments on the proposed rule were concerned that the FDA fiscal year 2001 OASIS entry line estimate (4.7 million lines) was too low. Some comments said that not all the food categories that will need to submit prior notice were included in the count; other comments said that the prior notice requirement would, because of the information required, increase the number of lines per entry by a significant amount.

According to FDA OASIS codes, all formal entries for human and animal food were included in the OASIS line count. This count included all food contact substances, including the bulk chemicals and polymers used to

produce food-packaging material. The OASIS line count also included the codes for beer and wine, but not distilled spirits (*e.g.*, bourbon, whiskey, gin, etc.).

The OASIS entry line totals do not include informal entries for mail or express carrier shipments, or for food brought into the United States as personal baggage, not for personal use, but intended for sale or other distribution use. Persons bringing food into the United States by these means, however, are required to submit prior notice to the FDA. Therefore, even though food contact substances, including food packaging, pesticide chemicals, and pesticide chemical residues are no longer subject to the interim final rule, we do not reduce the estimate of imported food entry lines in order to capture informal food lines and other imported food items that are not currently included in the OASIS line estimates. Rather than adjust the total line estimate downward to account for the exclusion of food packaging, pesticide chemicals, and pesticide chemical residues we adjust the estimate of lines upwards to capture food lines not in OASIS. The upward adjustment should be regarded as net of food contact substances and food packaging.

For the prior notice interim final rule, then, FDA has re-estimated the number of entry lines expected to be filed yearly for prior notice. The FDA PN System Interface and ABI/ACS are estimated to handle up to 25,000 prior notice submissions on a usual business day, for a projected yearly total of 6.5 million submissions. (FDA's prior notice system will operate 24 hours a day, 7 days a week; however, since most shipments enter the United States during a normal business work week, Monday through Friday, we estimate the projected prior notice line total as 25,000 daily submissions × 260 days = 6.5 million lines per year.) This updated total includes estimates for informal and other entries not currently captured by OASIS.

According to OASIS data, the average import entry contains 2.6 lines, which means that there are typically more than two different articles of food per import entry: *e.g.*, 100 cases of canned tuna and 50 cases of canned peaches in the same shipment. A prior notice must be filed for each of the lines in an entry.

FDA estimates that it will take, on average, 1 hour to submit an import entry of 2.6 lines. This time is an average; some entries will take longer than 1 hour to complete and other entries will take less than 1 hour to complete.

This 1-hour estimate includes 45 minutes of an administrative worker's time to gather information to initially complete the prior notice, and then 15 minutes of a manager's time to verify that the information is correct. Assuming that there is an average of 2.6 lines per entry, and each line requires a prior notice, then each line actually takes about 23 minutes to complete.

Comments on the prior notice proposed rule agreed with the FDA estimation for time to fill out the notice. Comments also agreed that once prior notice submitters were familiar with the information required, an hour was a reasonable time estimate. Some comments, however, suggested that the time to make amendments and updates to the prior notice had not been included or was not sufficient in the proposed rule. FDA believes the 1 hour estimate is appropriate for the following reasons: (1) The interim final rule does not contain update or amendment provisions as the reduced time for submitting a prior notice negated the need for them; (2) CBP Form 3461, (the entry document upon which information is provided to CBP) carries an estimated burden of 15.5 minutes and FDA Importer Entry Notice (as required by section 801 of the FD&C Act) carries an estimated burden of 8.5 minutes (Paperwork Reduction Act estimates); and (3) many comments agree with the hour estimate for submitting prior notice (23 minutes per line).

Comments were also concerned that FDA had not included costs to have a licensed customs broker file prior notice submissions in the costs estimated for the proposed rule. FDA specifically made no assumptions in its analysis of the proposed rule about who would file the prior notice. Our estimate covered anyone who was authorized to file a prior notice based on the anticipated number of entry lines. The analysis implicitly assumed that if an importer, owner, or consignee hired a customs broker to submit their prior notices, the broker would do so at the marginal cost. In the competitive market for broker services, this assumption is reasonable.

However, FDA prior notice may now be submitted through ABI/ACS for most importations, so the burden of prior notice submission will most likely be on the customs brokers that normally file with CBP. Some comments said that the current customs broker cost to file an entry with CBP is $110, with the additional filing of prior notice increasing these costs by up to 70 percent. Other comments also indicated that the additional costs to file prior notice would be between $50 or $100 or more for an entry.

Based on comments and FDA's own research on the broker costs, FDA agrees that the average costs to submit prior notice will be higher than the $33 per entry estimated in the proposed rule. For this interim final rule, FDA used information provided by commenters to estimate $75 as the cost to file prior notice. FDA believes that using a midrange estimate is appropriate for this cost since filing prior notice through ABI/ACS should efficiently combine transactions costs for brokers submitting information to both CBP and FDA.

Using the OASIS data indicating that the average imported entry contains 2.6 lines, we can then divide the expected yearly 6.5 million total lines by 2.6, which results in 2.5 million expected import entries. Table 3 of this document shows that the annual cost of prior notice submissions based on 2.5 million entries will be about $187.5 million.

TABLE 3.—COST TO FILL OUT PRIOR NOTICE SCREENS BY IMPORT ENTRY

[Must Be Electronic]

Broker cost per entry to submit prior notice	$75
OASIS entry total based on 6.5 million lines	2,500,000
Total Annual Costs (of all prior notice screens based on 2.6 lines per entry, including updates and amendments to the information)	$187,500,000

(4) *Information coordination costs.* As previously stated, FDA received numerous comments on the time it takes to file a prior notice for each line, with some comments agreeing that an entry will take an hour to complete once firms learn how to submit the information. However, comments were concerned that the preparation cost to coordinate the information needed for each prior notice had not been calculated.

In particular, comments said that firms will need to teach their suppliers, manufacturers/processors, customers, drivers, warehouses, growers, carriers, and shippers about the prior notice requirements regardless of whether each of the parties has filing responsibilities. FDA agrees. This new collection will necessitate some additional coordination of information among the parties involved in importing the article of food into the United States.

FDA assumes it takes about 2 business days (16 hours) for an administrative employee of the prior notice-submitting firm to coordinate with others to set up the new business practices required to receive the information needed for prior notice. We assume this set-up time will be sufficient to coordinate information for existing importing accounts. Table 4 of this document reports the costs of this information gathering and coordinating activity.

Because we expect some importing firms to enter and leave the industry every year, so do we expect importing firms to experience a turnover rate for their import accounts. FDA assumes that the turnover rate on these types of accounts is similar to the entry and exit rate of firms. We therefore assume that 10 percent of the firms' accounts each year are new accounts for which prior notice coordination of information is needed. This cost is also presented in table 4 of this document.

TABLE 4.—INFORMATION GATHERING AND COORDINATION FOR PRIOR NOTICE

Number of firms submitting notices	77,427
Administrative worker wage rate (doubled to include overhead)	$25.10
Time to coordinate existing accounts	16 hours
First year cost of coordination of information on current accounts	$31,094,683
Annual cost of coordination of information on new accounts	$3,109,468

ii. *FDA costs. Information Technology.* We assume that FDA's information technology (IT) costs for this option and each option hereafter are the costs of interfacing with ABI/ACS to receive prior notice through OASIS for most FDA-regulated food subject to this interim final rule. FDA is developing an FDA PN System Interface to receive prior notice information for import entries that cannot be accommodated through ABI/ACS, mainly mail and baggage entries, and prior notices for food refused under section 801(m) of the FD&C Act.

FDA has allocated $12.5 million for the development of the FDA prior notice system for fiscal year 2003. This total is broken down into $7,400,000 for infrastructure design, procurement, setup, operations, and maintenance of computer system hardware and system and database software and licensing, plus $5,100,000 for contractor services for the design, development, testing, and implementation of the FDA PN System Interface and the extensive enhancements required by OASIS to support prior notice. These costs are summarized in table 5 of this document. Also included in table 5 are the costs CBP has incurred to accommodate prior notice. CBP costs include modifying ABI/ACS, training, and outreach.

In the next few years, CBP plans to have its new system, ACE (Automated Commercial Environment), operational. The ACE system will replace the current ABI/ACS as well as combine other CBP entry functions and transactions. Prior Notice submission will be compatible with ACE. It is quite likely that importers will benefit from the enhanced functions of the new ACE system.

TABLE 5.—FDA PRIOR NOTICE SYSTEM COSTS

Infrastructure design and implementation	$7,400,000
Contractor services	$5,100,000
FDA system interface costs	$12,500,000
CBP ABI/ACS system modification costs	$500,000
Total prior notice system costs	$13,000,000

Human Resources. The implementation of prior notice does not specifically call for the hiring of additional FDA border or inspectional staff. However, even before the passage of the Bioterrorism Act, FDA hired 300 additional consumer safety officers to help with the inspection of articles of food. And with the implementation of the prior notice interim final rule, it is quite likely that FDA will need to concentrate even more of its human resources on enforcement activities. Currently, FDA is working on a memorandum of understanding with CBP that would allow FDA to commission CBP's help as needed for inspections and enforcement activities related to the prior notice rule.

Destruction of Foods. FDA will be responsible for the destruction of articles of food that come into the United States via international mail and whose prior notices are considered inadequate or refused. FDA does not have an estimate of these destruction costs. We expect these destruction costs to be minimal, however, based on the fact that these will be personal food shipments and that there were relatively few formal mail entries (38,000) for articles of food in the OASIS data for fiscal year 2002.

iii. *Current operating practices affected*—(1) *Food importers currently using BRASS.* In response to comments, FDA and CBP have agreed to allow prior notice information to be filed through ABI/ACS for most articles of food. By allowing prior notice to be submitted through ABI/ACS, FDA has eliminated the duplicative information collection that would have resulted from the proposed stand-alone FDA Web-based system. While combining agency efforts has eliminated duplicative submission of information for many food importers, the combined system will increase submission requirements for those food importers who use BRASS.

BRASS is a CBP program that allows expedited arrival processing for high-volume, repetitive shipments that have been judged by CBP to be low risk. BRASS processing is not compatible with the electronic submission of prior notice information because entry information for BRASS shipments is not filed until entry summary, long after the food has crossed the border. Therefore, those food importers who currently use BRASS and its expedited arrival process

will no longer be able to do so once prior notice submission is required.

Currently, importers who qualify to use BRASS show paperwork at the border. These importers then only have to submit an entry summary after arrival (up to 10 business days later). In contrast, non-BRASS importers must submit an entry and a later entry summary. Since prior notice is required before arrival, importers of FDA-regulated products will no longer be able to submit information to CBP using BRASS; they must submit both the entry information (which includes prior notice requirements) and then a later entry summary to CBP.

Data from CBP show that about 630,000 entry lines were submitted through BRASS for FDA-regulated products, including foods, in fiscal year 2002. We use this information to estimate the increased submission costs for these importers once they are no longer able to use BRASS to expedite entry of their products. Increased submission costs come in the form of having to make two submissions through CBP instead of the one summary entry after arrival in the United States. We calculated the cost of the one additional transmission of information, now required due to the prior notice information that is needed before arrival, in table 3 of this document. By using these same costs per import entry ($75), we can account for the extra costs for BRASS users. Table 6 shows that the extra submission of information by importers no longer able to use BRASS will be about $18 million per year.

Being able to use BRASS not only allows the condensing of the submission of required import information, but also allows the importer's carrier or transporter to spend less time crossing the border. BRASS users must stop at the border only long enough for a CBP official to ''wand'' the barcode information pertaining to their shipments and assign a CBP entry number to the shipment. Once food importers are no longer able to use BRASS, however, they must not only submit more information on the shipment than was previously required at arrival, but they also will no longer be able to cross the border as quickly. Because former BRASS entries will no longer be able to get through the border checkpoints as easily as they used to, we include here the cost of an extra half-hour of truck time per BRASS entry.

Using one comment's estimate of the cost of truck time, $250 per hour, we can calculate the yearly additional cost of wait time at the border for food importers who were former BRASS users. Table 6 of this document shows the cost of the additional truck time for BRASS users to be about $30 million annually.

TABLE 6.—ADDITIONAL COSTS FOR BRASS USERS

Additional Submission Costs:	
Total cost per import entry	$75
FY 2002 BRASS line total for FDA-regulated products	630,000
BRASS yearly entry total (2.6 lines per entry)	242,308
Additional annual costs of submissions for BRASS users	$18,173,100
Additional border wait time:	
Cost per half hour	$125
BRASS yearly entry total (2.6 lines per entry)	242,308
Additional annual border wait costs for former BRASS users	$30,288,500
Total annual additional food importing costs for BRASS users	$48,462,000

(2) *Loss of value for highly perishable products.* A 1-hour minimum prior notice requirement would be less likely to change current food importing practices than would a longer minimum time requirement for prior notice submission. Pre-proposal comments received from Canadian and Mexican perishable seafood processors and produce growers indicated they would prefer the minimum prior notice time to be set at 4 hours or less. The seafood processors and produce growers asked for the shorter minimum prior notice time because the source of these food products often is close to the U.S. border, and the products are perishable.

For example, Canadian fruit and vegetable producers said that such products as ''leafy vegetables, green onions, cabbage, cauliflower, new potatoes, sweet cherries, and berries are harvested within hours of arrival at the U.S. border and cannot withstand delays, especially during the extreme heat of summer and early fall when the products are in season.'' As another example, a produce company from Mexico commented that growers typically harvest produce in the morning, pack and cool the fruit in the afternoon, and then start the drive to the U.S. border during evening hours. Some, but not all, of the border ports are open in the evenings during the height of the Mexican produce season. If notice to FDA is required by 12 noon the calendar day before arrival at the border, as FDA proposed, it is unlikely that these produce products could be harvested in the morning in Mexico and then enter the United States by the same evening, because not all the information would be prepared in time to meet the submission deadline in the proposed rule, which was 12 noon the day before arrival in the United States.

Canadian seafood industry comments said that 90 percent of all fresh seafood sales are same day orders that are processed, sold, and shipped in the same day. They also commented that if buyers were required to submit seafood orders early (by 12 noon on the calendar day before arrival) because of prior notice requirements, they would tend to order short, rather than risk being left with a decomposing inventory. Comments also said that many perishable seafood contracts with shippers call for a variety of species to be delivered depending on what could be harvested that day; thus, species and the specific amount of fish in an import entry will be uncertain for longer prior notice timeframes.

From these comments, it is clear that at least in some industries, when the order for the shipment is received, when the prior notice is submitted, when the shipment is loaded, and the loaded shipment's location relative to a U.S. border all play roles in determining how the requirement for prior notice will affect current business operating practices.

FDA expects that there will be some imported shipments by vehicle for which the order was received just before the shipping time, some shipments for which the composition of the product has changed since the time when the prior notice was submitted, and some shipments for which other changes to the information on the prior notice must be made. Importers whose shipments fall into this ''changed'' category must

resubmit the prior notice or risk that their products will be refused admission into the United States and held if the notice is deemed inadequate.

FDA does not have information on the number of shipments that, under this option, would need to submit or resubmit prior notice information due to a late order or a change in the information provided on the original notice. We know that changes will occur for some percentage of all prior notices; comments did not indicate the percentage of notices that would have to be resubmitted.

Depending on the U.S. entry point, however, comments FDA received before publishing the proposal indicated that between 40 and 100 percent of shipments from Canada and Mexico are loaded less than 4 hours before arrival. Therefore FDA believes that it is this subset of importers, importing perishable products not far from the U.S. border, that will be most concerned with the prior notice submission timeframe. Based on this information, FDA bases its prior notice resubmission percentage rates and prior notice arrival time on the 4 hours required under option 4.

Option 4 is to have prior notice be required 4 hours before arrival, with the resubmission rate at 20 percent; one-half the comments' lower bound estimate of 40 percent. By using option 4 as the base option, we can then estimate resubmission rates for prior notice arrival times that are less than 4 hours. We assume, then, that for each hour reduction in required prior notice arrival time, the resubmission rate for importers of perishable produce and seafood (based on their location to the border and order placement) is cut in half. Thus, for a 3 hour prior notice timeframe, we assume the resubmission rate for notices will be 10 percent, for a 2 hour prior notice timeframe the resubmission rate for notices will be 5 percent, and for a 1 hour prior notice timeframe (this option) the resubmission rate for notices is 2.5 percent.

(3) *Loss of value for perishables.* The following paragraphs and tables outline how FDA calculated a loss in product value to account for the time that perishable produce and seafood from Canada and Mexico might have to wait to cross the border due to prior notice resubmission. This wait occurs if prior notice needs to be submitted or canceled and resubmitted due to shipment changes when the shipment is closer to the border than the 1 hour required; the transporter of the shipment must wait for the minimum prior notice time to elapse before crossing the border or risk being denied entry.

Comments from Canadian and Mexican perishable seafood and produce producers indicated that the mode of transport that causes the most concern for delays are shipments arriving in the United States by truck. Some comments, however, indicated that some perishable products might arrive via air transportation, and that air flights from Latin America and even potentially some countries in Europe could take less than 8 hours and in some cases less than 4 hours.

FDA has examined flight times to the countries suggested by comments. FDA does not believe that articles of food arriving in the United States on flights from South America or from Europe will be delayed by the prior notice requirement. However, FDA does believe that perishable products being flown in from Central America might experience some delay, and therefore lost product value, as a result of prior notice. We will begin to include the products from these countries in option 4, minimum prior notice time of 4 hours.

Information on perishable produce and seafood from Canada and Mexico used in this analysis represents yearly shipments of each product regardless of mode of transport. We assume most of these shipments arrive in the United States by truck or other ground transportation, given the proximity of Mexican and Canadian processors to the border, but it is possible that some shipments by air and sea are included in this count. These yearly all-inclusive totals should therefore be sufficient to account for any delay in time that importers of food shipments from Canada and Mexico may experience.

Table 7 of this document shows the volume of fresh, perishable produce imported into the United States from Mexico for the calendar year 2001 (Ref. 4). Produce was included in the count if it was considered 'highly or very highly perishable' (Ref. 5) and if the produce was not regulated under section 8e of the Agricultural Marketing Agreement Act of 1937 (AMAA). Products currently regulated by the AMAA (including, tomatoes, avocadoes, oranges, dates, hazelnuts, grapefruit, table grapes, kiwi fruit, limes, most olives, onions, Irish potatoes, plums, prunes, raisins, and walnuts), are required to notify USDA at least 1 day before arrival to make arrangements for inspection and certification of the product they are importing. These products therefore are not included in the count because they already have business practices in place that would accommodate the prior notice requirements provided in this option.

Several comments wanted products under the AMAA and products that are somewhat less perishable to be included in the perishability loss of value calculation. FDA has decided not to include these products in the lost value calculation; products under the AMAA already have operating practices in place to ensure they provide notice before arrival and those products that are less than highly perishable, such as potatoes, are not going to lose value because of the prior notice times presented in these options. FDA will expand its analysis to include the cost of additional truck time for longer submission times for all products being imported into the United States. FDA agrees with the comments that stated that the cost of truck time from a delay at the border is a real cost regardless of a product's perishability.

Multiplying the volume of Mexican produce that was imported into the United States in 2001 by the current U.S. border prices per pound (Ref. 6) for these products gives an estimate of wholesale revenue. Then we convert the wholesale revenue to retail revenue using the retail price mark-up on produce in the United States. We will increase the wholesale revenue by 100 percent in these estimates to represent a reasonable retail price mark-up rate across produce commodities in the United States (Ref. 7). Some comments did not agree with FDA's calculation of the spread between wholesale and retail prices for perishable products. We reexamine our choice of the 100 percent mark-up rate in a sensitivity analysis presented later in the costs section.

BILLING CODE 4160–01–P

Table 7.--Highly Perishable Produce Imported From Mexico

Perishable Produce From Mexico	Total Volume for 2001 (100,000 lb units)	Current Wholesale Price ($ per lb) (Sept. 2002)	Total Revenues Wholesale ($)
Cucumbers	6,491	0.29	188,239,000
Peppers (all varieties)	6,088	0.53	322,664,000
Squash	4,158	0.71	295,218,000
Mangoes	3,461	0.57	197,277,000
Papaya	1,587	0.45	71,415,000
Broccoli	1,138	0.65	73,970,000
Eggplant	887	0.40	35,480,000
Asparagus	856	1.29	110,424,000
Sweet corn	828	0.26	21,528,000
Strawberries	676	0.96	64,896,000
Beans	559	0.58	32,422,000
Radishes	516	0.31	15,996,000
Fruits-other	426	2.04	86,904,000
Vegetables-other	365	2.80	102,200,000
Greens	298	0.48	14,304,000
Spinach	197	1.375	27,087,500
Green peas	129	2.20	28,380,000
Okra	112	0.80	8,960,000
Berries-(miscellaneous)	78	1.67	13,026,000
Raspberries	32	4.40	14,080,000
Artichokes	23	1.50	3,450,000
Mushrooms	7	1.60	1,120,000
Endive	4	0.37	148,000
Escarole	2	0.37	74,000
Wholesale Value			$1,729,262,500
Retail Value			$3,458,525,000

We repeat the exercise outlined above in table 7 of this document for Canada, as shown in table 8 of this document. For these calculations we assume that Canadian produce growers use business practices that are similar to those used by Mexican growers; FDA did not receive any comments to the contrary. As with the Mexican produce, only Canadian produce that is highly or very highly perishable and did not fall under the purview of the AMAA is included in table 8 of this document.

Table 8.--Highly Perishable Produce Imported From Canada

Perishable Produce From Canada	Total Volume for 2001 (100,000 lb units)	Current Wholesale Price ($ per lb) (Sept. 2002)	Total Revenues Wholesale ($)
Peppers	753	0.30	22,590,000
Cucumbers	627	0.145	9,091,500
Blueberries	401	1.42	56,942,000
Mushrooms	373	1.55	57,815,000
Lettuce-other	243	0.50	12,150,000
Raspberries	89	2.78	24,742,000
Broccoli	88	0.72	6,336,000
Cherries	37	1.30	4,810,000
Sweet corn	36	0.22	792,000
Squash	27	0.17	459,000
Spinach	24	1.30	3,120,000
Radishes	11	0.50	550,000
Endive	9	0.17	153,000
Beans	7	0.50	350,000
Strawberries	5	0.575	287,500
Pears	4	0.39	156,000
Green peas	3	1.60	480,000
Greens	2	0.30	60,000
Eggplant	1	0.29	29,000
Wholesale Value			$200,913,000
Retail Value			$401,826,000

Assuming that perishable produce has an average life span of 7 days, we estimate the value of the time lost (1 hour) for 2.5 percent of the imports waiting to cross the border as a less than 1 percent loss in the product's value (1 hour out of 168 hours). Applying this 0.6 percent loss in value to 2.5 percent of the total retail revenue of imported Mexican fresh produce results in approximately a $519,000 loss in produce value. We calculate that same 0.6 percent loss in product value for 2.5 percent of the Canadian imported perishable produce. This loss in product value due to the 1-hour wait time totals approximately $60,000.

We used information from the annual imported seafood statistics published by the National Marine Fisheries Service (Ref. 8) to estimate the weight and wholesale value in dollars of all perishable seafood products imported from Mexico and Canada. As we did for perishable produce, we mark-up the wholesale price of the perishable seafood by 100 percent (Ref. 9) to represent the retail value of the products. Table 9 of this document shows the value of perishable seafood imports from Mexico; table 10 of this document shows the value of perishable seafood imports from Canada.

BILLING CODE 4160–01–P

Table 9.--Perishable Seafood Imported From Mexico

2001 Perishable Mexican Seafood Products	Pounds	Dollars
Atka mackerel, fresh	1,995	2,200
Bass, fresh	1,362	2,218
Clam live, fresh	245,498	274,942
Crab live, fresh	405,621	489,856
Crabmeat, fresh	287,531	1,540,130
Flatfish flounder, fresh	1,518	2,199
Flatfish fillet, fresh	1,705	3,100
Flatfish, fresh	678,768	781,883
Ground fish cod, fresh	4,000	2,400
Grouper, fresh	4,056,054	7,399,434
Lobster, live	8,584	50,474
Rock lobster live, fresh	794,224	5,859,260
Mackerel, fresh	147,334	127,873
Marine fish fillet, fresh	2,120,250	7,395,902
Marine fish, fresh	5,448,771	6,681,485
Marine fish scaled, fresh	162,105	125,346
Mollusks live, fresh	2,147	15,272
Octopus live, fresh	31,680	24,214
Oysters live, fresh	39,930	25,040
Salmon Atlantic fillet farmed, fresh	405	2,552
Sardine, sardinella, brisling, sprat, fresh	71,163	7,591
Scallops live, fresh	472,384	1,418,302
Sea urchin live, fresh	10,501	67,331
Sea urchin roe, fresh	464,946	4,641,659
Shark, fresh	1,500,877	711,349
Shrimp, shell-on, fresh	452,714	861,897
Snapper, fresh	5,835,775	9,254,300
Squid live, fresh	88,042	39,952
Swordfish, fresh	1,615,546	3,759,096
Trout, fresh	82,958	131,353
Rainbow trout farmed, fresh	80,384	161,526
Bigeye tuna, fresh	9,819	12,200
Bluefin tuna, fresh	82,471	332,250
Tuna, fresh	78,747	155,069
Yellowfin tuna, fresh	2,012,848	3,771,488
Whitefish fillet, fresh	3,590	7,560
Total Wholesale Value	27,302,246	56,138,703
Total Retail Value		$112,277,406

Table 10.--Perishable Seafood Imported From Canada

2001 Perishable Canadian Seafood Products	Pounds	Dollars
Bass, fresh	727,830	740,152
Caviar	20,189	272,770
Clam geoduck live, fresh	155,927	1,097,902
Clam live, fresh	9,144,304	22,064,683
Crab live, fresh	9,479,765	24,066,021
Crabmeat, fresh	27,601	80,431
Crustaceans live, fresh	148,925	574,989
Fish liver and roe, fresh	51,154	229,569
Flatfish flounder fillet, fresh	750,468	1,238,031
Flatfish flounder, fresh	6,264,346	4,367,780
Flatfish halibut Atlantic, fresh	1,948,791	7,542,598
Flatfish halibut Pacific, fresh	12,553,266	39,850,556
Flatfish fillet, fresh	853,224	3,536,120
Flatfish, fresh	1,693,516	796,383
Flatfish sole fillet, fresh	1,099,430	2,968,610
Flatfish sole, fresh	1,062,030	1,096,079
Flatfish turbot Greenland fillet, fresh	700,456	2,069,006
Flatfish turbot Greenland, fresh	862,211	3,146,300
Freshwater fish fillet, fresh	2,824,811	4,970,127
Freshwater fish, fresh	549,956	1,008,302
Groundfish cod Atlantic fillet, fresh	1,646,363	4,489,788
Groundfish cod Atlantic, fresh	4,904,368	5,199,471
Groundfish cod fillet, fresh	107,994	288,644
Groundfish cod, fresh	239,987	249,991
Groundfish cusk, fresh	8,281	22,060
Groundfish cusk, pollock fillet, fresh	218,854	362,293
Groundfish haddock fillet, fresh	708,261	2,109,607
Groundfish haddock, fresh	17,391,202	19,469,582
Groundfish hake fillet, fresh	160,972	93,941
Groundfish hake, fresh	14,070,217	9,182,974
Groundfish ocean perch fillet, fresh	5,415,106	10,029,520
Groundfish ocean perch, fresh	898,964	518,431
Groundfish pollock Atlantic, fresh	2,362,637	1,595,615
Groundfish pollock, fresh	161,121	130,308
Herring, fresh	4,009,469	671,338
Lingcod, fresh	612,093	812,597
Lobster, fresh	7,707	60,030
Lobster, live	49,200,925	244,567,173
Rock lobster live, fresh	196,858	1,133,246
Mackerel, fresh	943,155	595,937

Table 10.--Perishable Seafood Imported From Canada

2001 Perishable Canadian Seafood Products	Pounds	Dollars
Marine fish fillet, fresh	10,272,946	24,235,390
Marine fish, fresh	9,084,029	6,610,870
Mollusks live, fresh	809,461	907,048
Monkfish, fresh	89,861	154,267
Mussels live, fresh farmed	18,545,254	13,693,263
Mussels live, fresh wild	98,842	104,273
Oysters live, fresh farmed	2,918,098	4,378,548
Oysters live, fresh wild	579,011	1,236,868
Perch fillet, fresh	529,366	2,079,677
Perch, fresh	337,273	727,284
Pickerel fillet, fresh	850,256	3,715,248
Pickerel, fresh	1,682,743	3,500,552
Pike, fresh	214,390	395,706
Pike perch, yellow pike, fresh	125,114	197,396
Sablefish, fresh	21,648	48,845
Salmon Atlantic fillet, fresh farmed	28,972,418	97,270,694
Salmon Atlantic fillet, fresh wild	404,012	1,281,582
Atlantic Salmon, fresh farmed	107,101,696	248,809,617
Atlantic Salmon, fresh wild	68,732	84,035
Chinook Salmon, fresh farmed	5,752,197	10,614,163
Chinook Salmon, fresh wild	225,509	530,368
Salmon chum, fresh	1,651,221	1,133,029
Salmon coho, fresh farmed	1,382,572	1,963,499
Salmon coho, fresh wild	183,427	270,138
Salmon fillet, fresh	1,640,485	4,361,707
Salmon, fresh	2,820,957	5,430,272
Pink Salmon, fresh	79,981	60,403
Sockeye salmon, fresh	265,505	457,427
Salmonidae, fresh	57,787	149,760
Scallops live, fresh	6,955,476	31,688,064
Sea urchin live, fresh	5,053,710	4,367,434
Sea urchin roe, fresh	11,414	94,706
Dogfish shark, fresh	3,300,398	1,003,294
Shark, fresh	223,788	206,838
Shrimp peeled, fresh	5,401	27,934
Shrimp shell-on, fresh	479,483	1,478,634
Smelts, fresh	509,586	606,463
Snail live, fresh	46,174	121,239
Snapper, fresh	37,316	94,366
Swordfish, fresh	1,809,654	6,488,992

Table 10.--Perishable Seafood Imported From Canada

2001 Perishable Canadian Seafood Products	Pounds	Dollars
Trout, fresh	1,574,672	2,891,806
Rainbow trout, fresh farmed	361,121	608,347
Albacore tuna, fresh	25,859	70,076
Bigeye tuna, fresh	426,547	1,448,778
Bluefin tuna, fresh	288,361	2,464,619
Tuna, fresh	13,429	50,299
Yellowfin tuna, fresh	205,812	666,809
Whitefish fillet, fresh	988,816	1,864,542
Whitefish, fresh	8,224,484	11,262,979
Yellow perch fillet, fresh	1,174,798	6,401,844
Total Wholesale Value	382,663,829	931,608,947
Total Retail Value		$1,863,217,894

BILLING CODE 4160–01–C

We used the same logic for seafood as we did for produce to account for the possibility of having to resubmit prior notice: A change in the type of seafood in the shipment made after the original notice was submitted, less than 1 hour before scheduled arrival, would lead to a reduction in value. We use the reduction in the value of perishable imported seafood to account for the cost of a wait at the border while prior notice is resubmitted. Then, assuming that perishable seafood will keep for 2 days in a consumer's refrigerator (Ref. 10), we find that a 1-hour wait caused by the prior notice requirement for 2.5 percent of the products would result in a 2.1 percent loss in that seafood's value (1 hour out of 48 hours). The lost time would result in a $59,000 loss in value of Mexican perishable seafood imports and a $978,000 loss in value of Canadian perishable seafood imports.

Table 11 of this document shows the loss in value caused by the resubmitted prior notice information for the 2.5 percent of imported Mexican and Canadian fresh seafood and produce affected.

Table 11.--Loss in Value Caused by Resubmitted Prior Notice Under Option 2

Perishable Produce	
2001 Imported Mexican Produce Total Retail Value	$3,458,525,000
0.6% Reduction in value for 2.5% of Mexican produce	$519,000
2001 Imported Canadian Produce Total Retail Value	$401,826,000
0.6% Reduction in value for 2.5% of Canadian produce	$60,000
Total Lost Value for Produce	$579,000
Perishable Seafood	
2001 Imported Mexican Seafood Total Retail Value	$112,277,406
2.1% Reduction in value for 2.5% of Mexican seafood	$59,000
2001 Imported Canadian Seafood Total Retail Value	$1,863,217,894
2.1% Reduction in value for 2.5% of Canadian seafood	$978,000
Total Lost Value for Seafood	$1,037,000

Table 12 of this document presents a summary of the costs associated with option 2. Also presented in table 12 of this document are the present values of the costs associated with this option, calculated using the OMB-recommended discount rates of 3 and 7 percent.

The first 6 rows of the summary table are the same for options 2 through 9. The options differ only in the time set for prior notice and revisions; the differences in cost across options arise from differences in the lost value of produce and seafood, and in some options, the cost of truck time.

TABLE 12.—SUMMARY OF COSTS FOR OPTION 2 (1 HOUR PRIOR NOTICE SUBMISSION TIME)

	Dollars (thousands)
Learning costs	$66,240

TABLE 12.—SUMMARY OF COSTS FOR OPTION 2 (1 HOUR PRIOR NOTICE SUBMISSION TIME)—Continued

	Dollars (thousands)
Coordination costs	$31,095
Computer acquisition costs	$7,600
FDA prior notice system costs	$13,000
Annual costs to fill out prior notice screens	$187,500
Additional costs for BRASS users	$48,462
Lost value for Mexican produce	$519
Lost value for Canadian produce	$60
Lost value for Mexican seafood	$59
Lost value for Canadian seafood	$978
Total first year costs for Option 2	$355,513
Annual costs after first year	$249,372
Present value of costs at 7% for 20 years	$2,741,043
Present value of costs at 3% for 20 years	$3,813,068

c. *Option 3: Minimum prior notice time of 2 hours before arrival; electronic submission of information; any change in information requires resubmission.* Option 3 requires that prior notice be submitted 2 hours before arrival. If the prior notice time for submission is 2 hours instead of 1 hour, the probability of having to adjust and resubmit prior notice information will be greater. Now, instead of 2.5 percent of the importers of perishable products from Canada and Mexico having to cancel and resubmit their notices, we will assume that the 2-hour submission timetable means that 5 percent will have to resubmit their notices. FDA expects most orders to be placed well in advance of the 2-hour timeframe. Carriers of these products may not be able to cross the border for 2 hours instead of 1 hour, which affects 1.2 percent of the produce life span (2 hours out of 168 hours) and 4.2 percent of the seafood life span (2 hours out of 48 hours).

Table 13 of this document shows the loss in value caused by the resubmitted prior notice information for the 5 percent of imported Mexican and Canadian fresh seafood and produce affected.

TABLE 13.—LOSS IN VALUE CAUSED BY RESUBMITTED PRIOR NOTICE UNDER OPTION 3

Perishable Produce	
2001 Imported Mexican produce total retail value	$3,458,525,000
1.2% Reduction in value for 5% of Mexican produce	$2,075,115
2001 Imported Canadian produce total retail value	$401,826,000
1.2% Reduction in value for 5% of Canadian produce	$241,096
Total Lost Value for Produce	$2,316,000
Perishable Seafood	
2001 Imported Mexican seafood total retail value	$112,277,406
4.2% Reduction in value for 5% of Mexican seafood	$235,783
2001 Imported Canadian seafood total retail value	$1,863,217,894
4.2% Reduction in value for 5% of Canadian seafood	$3,912,758
Total Lost Value for Seafood	$4,149,000

We do not include the costs of truck time with this option, as the prior notice timeframe is relatively short and encompassed within the time many trucks currently spend at the borders.

Table 14 of this document presents a summary of the costs associated with option 3. Also presented in table 14 of this document are the present values of the costs associated with this option using the OMB-recommended discount rates of 3 and 7 percent.

TABLE 14.—SUMMARY OF COSTS FOR OPTION 3 (2 HOUR PRIOR NOTICE SUBMISSION TIME)

	Dollars (thousands)
Learning costs	$66,240
Coordination costs	$31,095
Computer acquisition costs	$7,600
FDA prior notice system costs	$13,000
Annual costs to fill out prior notice screens	$187,500
Additional costs for BRASS users	$48,462
Lost value for Mexican produce	$2,075
Lost value for Canadian produce	$241
Lost value for Mexican seafood	$236
Lost value for Canadian seafood	$3,913
Total first year costs for Option 3	$360,362
Annual costs after first year	$254,221
Present value of costs at 7% for 20 years	$2,792,413

TABLE 14.—SUMMARY OF COSTS FOR OPTION 3 (2 HOUR PRIOR NOTICE SUBMISSION TIME)—Continued

	Dollars (thousands)
Present value of costs at 3% for 20 years	$3,885,209

d. *Option 4: Minimum prior notice timeframe of 4 hours before arrival; electronic submission of information; any change in information requires resubmission.* Option 4 requires that prior notice be submitted 4 hours before arrival instead of 2 hours before arrival.

How much the business practices of importers, produce growers, and seafood processors will be affected by prior notice requirements again will depend on how early the orders are received compared with how early prior notice must be submitted. If the order for the product is placed more than 4 hours before the shipment is scheduled to arrive at the border, then there should be no delay in the importation of the product.

What is more likely to cause a wait before crossing the border is if the information on the prior notice changes after the prior notice has been submitted (*i.e.,* quantity shipped is greater than the quantity specified on the prior notice); this situation will be exacerbated if the exporting facility is located within 4 hours of the U.S. border. For example, if the prior notice is submitted for swordfish before the transport is loaded, and the fish to be loaded turns out to be shark instead of swordfish, the prior notice information submitted will not match the actual shipment. This is one way that information on a prior notice submission might change after the prior notice has already been submitted to FDA, thus requiring a cancellation of the prior notice and a resubmission of the corrected information.

Having to resubmit a prior notice to FDA may not cause any delay of the shipment if the original submission was placed early enough. However, it is likely that the necessary corrected prior notice information will be resubmitted not long before the article of food starts heading for the border. Therefore it is likely that some shipments may have to wait several hours before entering the United States.

If the prior notice time for submission is 4 hours before arrival instead of 2 hours, the probability of having to adjust and resubmit prior notice information will be greater. Now, instead of 5 percent of the importers of perishable products from Canada and Mexico having to resubmit their notices, we will assume that the 4-hour submission timetable means that 20 percent will have to resubmit their notices. Since pre-proposal comments asserted that 40 to 100 percent of trucks are loaded less than 4 hours before driving to the border, we will assume one-half of their lower-bound estimate as the percentage of articles of food that will have to have their prior notices resubmitted.

For this option, and other options where the minimum prior notice time for food arriving by airplane is 4 hours or longer, we include the lost value for highly and very highly perishable produce and seafood imported from Central American countries (including some Caribbean countries and Colombia), not subject to the AMAA. Perishable produce from Belize, Costa Rica, the Dominican Republic, Guatemala, Haiti, Jamaica, Honduras, Nicaragua, Panama, and Colombia can all be flown to Miami, FL in 2 to 4 hours, depending on the starting location. Perishable fish products from the Bahamas, Barbados, Costa Rica, the Dominican Republic, El Salvador, Guatemala, Haiti, Honduras, Jamaica, Nicaragua, Panama, and Colombia also can be flown to Miami, FL in 2 to 4 hours. Table 15 of this document shows the retail value of perishable produce imported from Central America to the United States for 2001. Table 16 of this document shows the retail value of perishable seafood imported from Central America for 2001.

BILLING CODE 4160–01–P

Table 15.--Perishable Produce From Central America

Perishable Produce From Central America	Total Volume for 2001 (100,000 lb units)	Current Wholesale Price ($ per lb) (Sept. 2002)	Total Revenues Wholesale ($ thousands)
Asparagus	37	1.29	4,773
Beans	11	0.58	638
Broccoli	1	0.65	65
Cherries	2	1.3	260
Cucumbers	363	0.29	10,527
Eggplant	61	0.4	2,440
Endive	13	0.37	481
Green peas	227	2.2	49,940
Mangoes	439	0.57	25,023
Berries (miscellaneous)	14	1.67	2,338
Okra	2	0.8	160
Papaya	107	0.45	4,815
Peppers	39	0.53	2,067
Squash	73	0.71	5,183
Total 2001 wholesale value			$108,710
Retail Value			$217,420

Table 16.--Perishable Seafood From Central America

2001 Perishable Seafood Products Flown From Central America	Pounds	Dollars
Atka mackerel, fresh	14,128	22,148
Conch live, fresh	2,474,956	5,884,962
Crab live, fresh	248,580	1,125,507
Eels, fresh	207	7,520
Fish liver and roe, fresh	78,606	112,066
Flatfish flounder, fresh	6,622	7,840
Freshwater fish, fresh	211,853	354,798
Groundfish cod, fresh	1,808	2,381
Grouper, fresh	1,077,703	2,092,349
Lingcod, fresh	5,020	8,804
Lobster (Homarus spp), fresh	104,689	1,007,256
Rock lobster, live	55,042	414,237
Mackerel, fresh	178,312	250,169
Marine fish fillet, fresh	5,840,824	12,442,031
Marine fish, fresh	21,284,450	32,628,025
Marine fish scaled, fresh	98,085	196,186
Molluscs live, fresh	7,372	14,739
Oysters live, fresh	4,629	10,380
Perch fillet, fresh	6,461	13,104
Salmon Atlantic fillet, fresh farmed	8,969	16,002
Salmon fillet, fresh	3,766	10,524
Shark, fresh	35,823	45,543
Shrimp peeled, fresh	58,384	177,434
Snapper, fresh	8,502,525	14,314,692
Squid live, fresh	5,914	2,575
Swordfish, fresh	2,272,257	6,626,692
Swordfish steaks, fresh	1,577	5,945
Tilapia fillet, fresh	11,053,830	28,080,704
Toothfish patagonian, fresh	5,636	15,574
Trout, fresh	67,795	130,844
Trout rainbow, fresh farmed	468,200	1,025,162
Tuna albacore, fresh	55,561	113,930
Tuna bigeye, fresh	2,924,770	8,348,825
Tuna bluefin, fresh	1,580	2,148
Tuna, fresh	1,070,384	2,735,066
Tuna yellowfin, fresh	2,542,404	7,652,086
Wholesale Value		$125,898,248
Retail Value		$251,796,496

BILLING CODE 4160–01–C

Importers of perishable products from Canada, Mexico, and Central America may not be able to cross the border for 4 hours, which is 2.4 percent of the produce life span (4 hours out of 168 hours) and 8.3 percent of the seafood life span (4 hours out of 48 hours).

Table 17 of this document shows the loss in value caused by the cancelled and resubmitted prior notice information for the 20 percent of imported Mexican, Canadian, and Central American perishable seafood and produce affected.

TABLE 17.—LOSS IN VALUE CAUSED BY RESUBMITTED PRIOR NOTICE UNDER OPTION 4

Perishable Produce	
2001 Imported Mexican produce total retail value	$3,458,525,000
2.4% Reduction in value for 20% of Mexican produce	$16,600,920
2001 Imported Canadian produce total retail value	$401,826,000
2.4% Reduction in value for 20% of Canadian produce	$1,928,765
2001 Imported Central American produce total retail value	$217,420,000
2.4% Reduction in value for 20% of Central American produce	$1,043,616
Total Lost Value for Produce	$19,574,000
Perishable Seafood	
2001 Imported Mexican seafood total retail value	$112,277,406
8.3% Reduction in value for 20% of Mexican seafood	$1,863,805
2001 Imported Canadian seafood total retail value	$1,863,217,894
8.3% Reduction in value for 20% of Canadian seafood	$30,929,417
2001 Imported Central American produce total retail value	$251,796,496
8.3% Reduction in value for 20% of Central American seafood	$4,179,822
Total Lost Value for Seafood	$36,973,000

For this 4-hour prior notice submission timeframe and for all subsequent options with longer timeframes for submission, we also begin to include some holding time costs paid to carriers of products to be imported. We add in this cost in response to the comments that indicated that at least 40 percent of food products being imported from Canada and Mexico are coming from locations located 4 hours or less from a U.S. border. For products located less than 4 hours from the U.S. border, it is quite possible that the carrier will have to be paid for additional waiting time over what had been established under the current business practices. Comments indicated that additional truck time was a real possibility for all food products being imported and not just perishable products. We therefore include a percentage of all products requiring prior notice in the cost estimate in table 18 of this document.

We do not have information on the number of import entries that may use additional truck time because of prior notice submission times. Therefore, we will assume that 20 percent of the 2.3 million lines that entered the United States by ground transportation in fiscal year 2002 (based on OASIS data) will pay for an additional 1 hour of truck time per entry. We use 20 percent as the percentage of trucks delayed to be consistent with our resubmission rate of 20 percent when the prior notice submission timeframe is 4 hours before arrival.

TABLE 18.—COST OF ADDITIONAL CARRIER TME FOR OPTION 4

2002 OASIS import entry lines by ground transportation (truck or train)	2,300,000
Average number of lines per entry	2.6
Total number of ground entries	884,615
20% of ground entries	176,923
Cost for 1 hour of carrier time ($250 per hour)	$250
Total cost of truck time	$44,231,000

Table 19 of this document presents a summary of the costs associated with option 4. Also presented in table 19 of this document are the present values of the costs associated with this option using the OMB-recommended discount rates of 3 and 7 percent.

TABLE 19.—SUMMARY OF COSTS FOR OPTION 4 (4 HOUR MINIMUM PRIOR NOTICE SUBMISSION TIME)

	Dollars (thousands)
Learning costs	$66,240
Coordination costs	$31,095
Computer acquisition costs	$7,600
FDA prior notice system cost	$13,000
Annual costs to fill out prior notice screens	$187,500
Additional Costs for BRASS users	$48,462
Lost value for Mexican produce	$16,601
Lost value for Canadian produce	$1,929
Lost value for Central American produce	$1,044
Lost value for Mexican seafood	$1,864
Lost value for Canadian seafood	$30,929
Lost value for Central American seafood	$4,180
Cost for truck time	$44,231
Total first year costs for Option 4	$454,675
Annual costs after first year	$348,534
Present value of costs at 7% for 20 years	$3,791,567
Present value of costs at 3% for 20 years	$5,288,348

e. *Option 5: Minimum prior notice time frame of 1 hour before arrival for vehicles, 4 hours before arrival for rail and air, and 8 hours before arrival for vessels; electronic submission of information; any change in information requires resubmission.* Option 5 requires that prior notice be submitted 1 hour before arrival for articles of food being imported by vehicle and 4 hours before arrival for articles of food being imported by rail or air modes of transportation. This option is a combination of the minimum prior notice times used in options 2, 4, and 8. By varying minimum prior notice times by conveyance type, option 5 provides flexibility for the importers where it is most needed.

Importers whose articles of food are transported by vehicle from Canada and Mexico are most constrained by facility proximity to the United States, so a 1-hour minimum prior notice time for these shipments is the least constraining possible while still allowing FDA the time needed to review the import information. Comments on shipments of food arriving in the United States by vehicle indicated that (specifically Mexican) food facilities are often close to the U.S. border, and thus requested that FDA require a minimum prior notice time of 2 hours rather than the proposed 12 noon the calendar day prior to arrival. A minimum prior notice time for vehicle traffic of 1 hour will be even less constraining on importers than the 2 hours requested by the majority of comments.

Importers whose shipments of food are flown in from the Caribbean, Central America, and Colombia, or importers whose food shipments are brought into the United States by train will be less constrained by minimum prior notice time than food shipments arriving by vehicle, but more constrained than food shipments arriving in the United States by vessel. Therefore, for this option, importers bringing food into the United States by airplane or by train are required to give prior notice a minimum 4 hours before arrival. This timeframe is sufficient for even shorter flights from Caribbean countries and Central American countries to the United States. For example, though the actual flying time of a direct flight from the Bahamas to Miami is only 2 hours, the airplane must be loaded, taxied to the runway, cleared for take-off, and on arrival landed, taxied from the runway, and unloaded. A 4-hour minimum prior notice time will therefore seldom be constraining. A 4-hour minimum prior notice time for flights could be constraining for rush orders of food from Canada and Mexico. However, OASIS fiscal year 2002 data shows that only about 10,000 food entry lines were flown in from Canada and only about 20,000 lines flown in from Mexico. This is a very small portion, less than 1 percent, of total shipments from Canada and Mexico.

Option 5 requires that prior notice be submitted 8 hours before arrival for articles of food being imported by vessel. We do not specifically address food importation by vessel in this option because this mode of transport will not be constrained by an 8 hour minimum prior notice timeframe. The costs of this option for vessels will be the same as in the previous option.

(i) *One-hour minimum prior notice time for food arriving by vehicle.* Importers of perishable products from Canada and Mexico, whose articles of food arrive in the United States by vehicle, will have to submit prior notice 1 hour before arrival. This short, minimum submission time should eliminate the probability of having to resubmit prior notice for all but 2.5 percent of those perishable products imported from Canada and Mexico.

OASIS data indicates that approximately 44 percent of all imported food shipments used land transportation to arrive in the United States for fiscal year 2002. These shipments must come from Canada and Mexico (or in some cases transshipped), as these are the countries that have land borders with the United States. OASIS data shows that only about 2 percent of imported food shipments arrived in the United States by rail in 2002, and less than 1 percent of shipments arrived from Canada and Mexico by air. Thus, at least 97 percent of all imported food shipments arriving from Canada and Mexico used vehicles as the mode of transport.

Using this 97 percent estimate, we calculate the proportion of the total retail value of highly perishable produce and seafood from Canada and Mexico that arrives in the United States by vehicle. We then use this new retail value, 97 percent of the total value, to calculate the lost product value (1 hour out of 168 hours for produce, 1 hour out of 48 hours for seafood) for the 2.5 percent of highly perishable produce and seafood from Canada and Mexico for which importers would have to resubmit the prior notice when the minimum submission time is 1 hour. Table 20 of this document shows the loss in value caused by the cancelled and resubmitted prior notice information for the 2.5 percent of imported Mexican and Canadian perishable seafood and produce affected.

We also do not include the cost of truck time with this option, because the minimum prior notice time for articles of food arriving by vehicle is only 1 hour. Given current border wait times and manufacturing/processing facility distance from the U.S. border, it is unlikely that articles of food will have to wait to enter the United States because of prior notice requirements.

TABLE 20.—LOSS IN VALUE CAUSED BY RESUBMITTED PRIOR NOTICE UNDER OPTION 5 FOR SHIPMENTS ARRIVING BY VEHICLE (1-HOUR MINIMUM NOTICE REQUIREMENT)

	Dollars
Perishable Produce:	
2001 Imported Mexican produce total retail value	$3,458,525,000
97% of Total retail value for Mexican produce	$3,354,769,000
0.6% Reduction in value for 2.5% of Mexican produce	$503,215
2001 Imported Canadian produce total retail value	$401,826,000
97% of Total retail value for Canadian produce	$389,771,000
0.6% Reduction in value for 2.5% of Canadian produce	$58,466
Total lost value for produce	$562,000
Perishable Seafood	
2001 Imported Mexican seafood total retail value	$112,277,000
97% of Total retail value for Mexican seafood	$108,909,000
2.1% Reduction in value for 2.5% of Mexican seafood	$57,177
2001 Imported Canadian seafood total retail value	$1,863,218,000

TABLE 20.—LOSS IN VALUE CAUSED BY RESUBMITTED PRIOR NOTICE UNDER OPTION 5 FOR SHIPMENTS ARRIVING BY VEHICLE (1-HOUR MINIMUM NOTICE REQUIREMENT)—Continued

	Dollars
97% of Total retail value for Canadian seafood	$1,807,321,000
2.1% Reduction in value for 2.5% of Canadian seafood	$948,844
Total lost value for seafood	$1,006,000

(ii) *Four-hour minimum prior notice time for food arriving by rail and air.* The 4-hour minimum submission time for prior notice applies to articles of food imported by rail and air modes of transportation. A 4-hour minimum prior notice time for these modes of transportation could be constraining for products arriving from the countries bordering the United States.

Since we are assuming that 97 percent of food imported from Canada and Mexico arrives by vehicle, we are left with 3 percent that is imported by rail or air. We adjust the total retail value of highly perishable produce and seafood from Canada and Mexico to account for this 3 percent. Table 21 of this document shows the lost value for the 20 percent of perishable products arriving by rail and air from Canada and Mexico that may have to resubmit prior notice when the minimum prior notice time is 4 hours.

For Central American countries, it is probable that most, if not all, of their perishable products are imported to the United States by air. Therefore, for the highly perishable produce and seafood coming from the Central American region, we assume that 97 percent of the perishable produce and seafood from Central America is shipped to the United States by air. We adjust the total retail value of the perishable products from Central America to reflect that 97 percent of the total value that arrives in the United States by air. Table 21 of this document shows the loss of value for those 20 percent of air shipments from Central America for which prior notice was resubmitted under option 5.

Table 21.--Loss in Value Caused by Resubmitted Prior Notice Under Option 5 for Shipments Arriving by Air and Rail (4-hour minimum notice requirement)

Perishable Produce	Dollars
2001 Imported Mexican produce total retail value	$3,458,525,000
3% of Total retail value for Mexican produce	$103,756,000
2.4% Reduction in value for 20% of Mexican produce	$498,000
2001 Imported Canadian produce total retail value	$401,826,000
3% of Total retail value for Canadian produce	$12,055,000
2.4% Reduction in value for 20% of Canadian produce	$58,000
2001 Imported Central American produce total retail value	$217,420,000
97% of Total retail value for Central American produce	$210,897,000
2.4% Reduction in value for 20% of Central American produce	$1,012,000
Total lost value for produce	$1,568,000
Perishable Seafood	
2001 Imported Mexican seafood total retail value	$112,277,000
3% of Total retail value for Mexican seafood	$3,368,000
8.3% Reduction in value for 20% of Mexican seafood	$56,000
2001 Imported Canadian seafood total retail value	$1,863,218,000
3% of Total retail value for Canadian seafood	$55,897,000
8.3% Reduction in value for 20% of Canadian seafood	$928,000
2001 Imported Central American seafood total retail value	$251,796,000
97% of Total retail value for Central American seafood	$244,242,000
8.3% Reduction in value for 20% of Central American seafood	$4,054,000
Total lost value for seafood	$5,038,000

Table 22 of this document presents a summary of the costs associated with option 5, including the costs of the option at the OMB-recommended discount rates of 3 and 7 percent.

Table 22.--Summary of Costs for Option 5

	Dollars ($ thousands)
Learning costs	$66,240
Coordination costs	$31,095
Computer acquisition costs	$7,600
FDA prior notice system cost	$13,000
Annual costs to fill out prior notice screens	$187,500
Additional costs for BRASS users	$48,462
Lost value for produce	$2,130
Lost value for seafood	$6,044
Cost for truck time	$0
Total first year costs for option 5	$362,071
Annual costs after first year	$255,929
Present value of costs at 7% for 20 years	$2,810,515
Present value of costs at 3% for 20 years	$3,910,630

e. *Option 6: Minimum prior notice timeframe of 2 hours before arrival for vehicles, 4 hours before arrival for rail and air, and 8 hours before arrival for vessels; electronic submission of information; any change in information requires resubmission (interim final rule).* Option 6 requires that prior notice be submitted 2 hours before arrival for articles of food being imported by vehicle and 4 hours before arrival for articles of food being imported by rail or air modes of transportation.

Option 6 requires that prior notice be submitted 8 hours before arrival for articles of food being imported by vessel. We do not specifically address food import by vessel in this option because this mode of transport will not be constrained by an 8-hour minimum prior notice timeframe. The costs of this option for vessels will be the same as in the previous options.

i. *Two-hour minimum prior notice time for food arriving by vehicle.* Importers of perishable products from Canada and Mexico, whose articles of food arrive in the United States by vehicle, will have to submit prior notice 2 hours before arrival. This short, minimum submission time frame should eliminate the probability of having to resubmit prior notice for all but 5 percent of those perishable products imported from Canada and Mexico.

OASIS data indicates that approximately 44 percent of all imported food shipments used land transportation to arrive in the United States for fiscal year 2002. These shipments must come from Canada and Mexico (or in some cases transshipped), as these are the countries that have land borders with the United States. OASIS data shows that only about 2 percent of imported food shipments arrived in the United States by rail in 2002, and less than 1 percent of shipments arrived from Canada and Mexico by air. Thus, at least 97 percent of all imported food shipments arriving from Canada and Mexico used vehicles as the mode of transport.

Using this 97 percent estimate, we calculate the proportion of the total retail value of highly perishable produce and seafood from Canada and Mexico that arrives in the United States by vehicle. This new retail value, 97 percent of the total value, is then used to calculate the lost product value for the 5 percent of highly perishable produce and seafood from Canada and Mexico for which importers would have to resubmit the prior notice when the minimum submission time is 2 hours. Table 23 of this document shows the loss in value caused by the cancelled and resubmitted prior notice information for the 5 percent of imported Mexican and Canadian perishable seafood and produce affected.

We do not include the lost value for perishable seafood and produce imported from Central America in table 23 of this document since perishable products from Central America are most likely flown into the United States. We also do not include the cost of truck time with this option since the minimum prior notice time for articles of food arriving by vehicle is only 2 hours. Given current border wait times and manufacturing/processing facility distance from the U.S. border, it is unlikely that trucks will have to wait to enter the United States because of prior notice requirements. We expect that some delays will occur, but that they will be relatively rare and will impose little additional cost compared with a 1-hour minimum prior notice time. We therefore do not include any additional truck time costs for this option.

Table 23.--Loss in Value Caused by Resubmitted Prior Notice Under Option 6 for Shipments Arriving by Vehicle (2 hour minimum notice requirement)

Perishable Produce	Dollars
2001 Imported Mexican produce total retail value	$3,458,525,000
97% of Total retail value for Mexican produce	$3,354,769,000
1.2% Reduction in value for 5% of Mexican produce	$2,013,000
2001 Imported Canadian produce total retail value	$401,826,000
97% of Total retail value for Canadian produce	$389,771,000
1.2% Reduction in value for 5% of Canadian produce	$234,000
Total Lost Value for Produce	$2,247,000
Perishable Seafood	
2001 Imported Mexican seafood total retail value	$112,277,000
97% of Total retail value for Mexican seafood	$108,909,000
4.2% Reduction in value for 5% of Mexican seafood	$229,000
2001 Imported Canadian seafood total retail value	$1,863,218,000
97% of total retail value for Canadian seafood	$1,807,321,000
4.2% Reduction in value for 5% of Canadian seafood	$3,795,000
Total Lost Value for Seafood	$4,024,000

ii. *Four-hour minimum prior notice time for food arriving by rail and air.* The 4-hour minimum submission time for prior notice applies to articles of food imported by rail and air modes of transportation. A 4-hour minimum prior notice timeframe for these modes of transportation could be constraining for products arriving from the countries bordering the United States.

Since we are assuming that 97 percent of food imported from Canada and Mexico arrives by vehicle, we are left with 3 percent that is imported by rail or air. We adjust the total retail value of highly perishable produce and seafood from Canada and Mexico to account for this 3 percent. Table 24 of this document shows the lost value for the 20 percent of perishable products arriving by rail and air from Canada and Mexico that may have to resubmit prior notice when the minimum prior notice timeframe is 4 hours.

For Central American countries, it is probable that most, if not all, of their perishable products are imported to the United States by air. Therefore, for the highly perishable produce and seafood coming from the Central American region, we assume that 97 percent of the perishable produce and seafood from Central America is shipped to the United States by air. We adjust the total retail value of the perishable products from Central America to reflect that 97 percent of the total value that arrives in the United States by air. Table 24 of this document shows the loss of value for those 20 percent of air shipments from Central America for which prior notice was resubmitted under option 6.

Table 24.--Loss in Value Caused by Resubmitted Prior Notice Under Option 6 for Shipments Arriving by Air and Rail (4 hour minimum notice requirement)

Perishable Produce	Dollars
2001 Imported Mexican produce total retail value	$3,458,525,000
3% of Total retail value for Mexican produce	$103,756,000
2.4% Reduction in value for 20% of Mexican produce	$498,000
2001 Imported Canadian produce total retail value	$401,826,000
3% of Total retail value for Canadian produce	$12,055,000
2.4% Reduction in value for 20% of Canadian produce	$58,000
2001 Imported Central American produce total retail value	$217,420,000
97% of Total retail value for Central American produce	$210,897,000
2.4% Reduction in value for 20% of Central American produce	$1,012,000
Total Lost Value for Produce	$1,568,000
Perishable Seafood	
2001 Imported Mexican seafood total retail value	$112,277,000
3% of Total retail value for Mexican seafood	$3,368,000
8.3% Reduction in value for 20% of Mexican seafood	$56,000
2001 Imported Canadian seafood total retail value	$1,863,218,000
3% of Total retail value for Canadian seafood	$55,897,000
8.3% Reduction in value for 20% of Canadian seafood	$928,000
2001 Imported Central American seafood total retail value	$251,796,000
97% of Total retail value for Central American seafood	$244,242,000
8.3% Reduction in value for 20% of Central American seafood	$4,054,000
Total Lost Value for Seafood	$5,038,000

Table 25 of this document presents a summary of the costs associated with option 6, including the costs of the option at the OMB-recommended discount rates of 3 and 7 percent.

Table 25.--Summary of Costs for Option 6--Interim Final Rule

	Dollars (thousands)
Learning costs	$66,240
Coordination costs	$31,095
Computer acquisition costs	$7,600
FDA prior notice system cost	$13,000
Annual costs to fill out prior notice screens	$187,500
Additional costs for BRASS users	$48,462
Lost value for produce	$3,815
Lost value for seafood	$9,062
Cost for truck time	$0
Total first year costs for Option 6	$366,744
Annual costs after first year	$260,633
Present value of costs at 7% for 20 years	$2,860,342
Present value of costs at 3% for 20 years	$3,980,603

f. *Option 7: Prior notice required 4 hours before arrival; electronic submission of information; allow changes to the prior notice submission up to 1 hour before arrival.* We now take the estimates in option 4 and adjust them to account for the effects of allowing changes to the prior notice submission without requiring resubmission. Although the original submission time of 4 hours before arrival is relatively short, allowing changes to the original submission, in the form of electronic amendments and updates, would improve the flow of import traffic by reducing the notice resubmission rate. The smaller resubmission rate would reduce the loss of value for perishable foods that might otherwise have to wait extra time before crossing the U.S. border.

Prior notice requires that certain information about each imported food product be relayed to FDA before

arrival. A more flexible entry screen that allows for updates and amendments to some notice information would reduce the likelihood that the original notice would have to be resubmitted by importers, thus lessening the time burden, and therefore the costs of prior notice. Even a 1 hour amendment and updates to prior notice would provide some flexibility for importers in industries where certain information, such as the type of the product being imported and the quantity of the article to be imported, may change or is not known until just before shipping.

It is also important to note here that we assume that the 1 hour time FDA has estimated that it takes to fill out each prior notice is sufficient for this option, even with the opportunity of amending prior notice information. This time is sufficient because amending or updating a particular item in the prior notice submission should only take a few seconds to a few minutes in time.

If prior notice can be amended and updated, fewer resubmissions would occur. For this option, then, with amendment and updates, we will assume that the number of prior notice resubmissions necessitated by changes in information on the notice would be reduced from 20 percent (as in option 4) to 2.5 percent. FDA believes that the resubmission rate for a 4-hour prior notice time with 1-hour amendment will result in about the same resubmission rate as option 2 (a straight, 1 hour before arrival, prior notice timeframe). FDA believes these two timeframes will cause about the same resubmission rate, because both arrival timeframes are relatively short and both are within the timeframe of 4 hours that was suggested by Canadian and Mexican perishable products importers.

Compared with option 4 (4 hours prior notice with no amendments or updates), option 7 would save 4 hours wait time per prior notice submission that can be amended or updated. Prior notice submissions that cannot be amended or updated, however, would lead to waits of 4 hours. Those 2.5 percent of shipments for which prior notice cannot be amended or updated would wait an extra 4 hours before being able to cross the border. This wait translates into 2.4 percent of the perishable produce life span (4 hours out of 168 hours) and 8.3 percent of the perishable seafood life span (4 hours out of 48 hours). Table 26 of this document shows the costs of submitting prior notice for a 4-hour minimum time before arrival, with a 1-hour timeframe before arrival for submitting amendment and updates, for Canadian, Mexican, and Central American perishable produce and seafood.

Table 26.--Loss in Value Caused by Resubmitted Prior Notice Under Option 7

Perishable Produce	Dollars
2001 Imported Mexican produce total retail value	$3,458,525,000
2.4% Reduction in value for 2.5% of Mexican produce	$2,075,115
2001 Imported Canadian produce total retail value	$401,826,000
2.4% Reduction in value for 2.5% of Canadian produce	$241,096
2001 Imported Central American produce total retail value	$217,420,000
2.4% Reduction in value for 2.5% of Central American produce	$130,452
Total Lost Value for Produce	$2,446,000
Perishable Seafood	
2001 Imported Mexican seafood total retail value	$112,277,406
8.3% Reduction in value for 2.5% of Mexican seafood	$232,976
2001 Imported Canadian seafood total retail value	$1,863,217,894
8.3% Reduction in value for 2.5% of Canadian seafood	$3,866,177
2001 Imported Central American seafood total retail value	$251,796,496
8.3% Reduction in value for 2.5% of Central American seafood	$522,478
Total Lost Value for Seafood	$4,621,000

Table 27 of this document compares the reduction in the costs of this interim final rule if amendments and updates to prior notice are allowed (option 7), as opposed to the no-amendment 4-hour option 4.

Table 27.--Comparison of Option 4 With Option 7--Lost Value for Perishables

Perishable Mexican Produce Value Loss	
Option 4--4 hour minimum notice	$16,601,000
Option 7--4 hour notice with changes	$2,075,000
Savings with amendment and update	$14,526,000
Perishable Canadian Produce Value Loss	
Option 4--4 hour minimum notice	$1,929,000
Option 7--4 hour notice with changes	$241,000
Savings with amendment and update	$1,688,000
Perishable Central American Produce Value Loss	
Option 4--4 hour minimum notice	$1,044,000
Option 7--4 hour notice with changes	$130,000
Savings with amendment and update	$914,000
Perishable Mexican Seafood Value Loss	
Option 4--4 hour minimum notice	$1,864,000
Option 7--4 hour notice with changes	$233,000
Savings with amendment and update	$1,631,000
Perishable Canadian Seafood Value Loss	
Option 4--4 hour minimum notice	$30,929,000
Option 7--4 hour notice with changes	$3,866,000
Savings with amendment and update	$27,063,000
Perishable Central American Seafood Value Loss	
Option 4--4 hour minimum notice	$4,180,000
Option 7--4 hour notice with changes	$522,000
Savings with amendment and update	$3,658,000

Although submitters can amend prior notice information with this option, we assume that those 2.5 percent of prior notice submissions that cannot use the amendment, but instead have to wait an additional 4 hours to cross the border, would incur at least some truck costs as a result of this wait time. Therefore, we will assume that 2.5 percent of the 2.3 million lines that entered the United States by ground transportation in fiscal year 2002 (based on OASIS data) would pay for an additional 4 hours of truck time per line. We use 2.5 percent as the percentage of trucks delayed to be consistent with our resubmission rate of 2.5 percent when the prior notice submission timeframe is 4 hours before arrival with a 1-hour amendment option. Table 28 of this document shows the costs of truck time associated with those prior notices that cannot be amended.

TABLE 28.—COST OF ADDITIONAL CARRIER TIME FOR OPTION 7

2002 OASIS import entry lines by ground transportation (truck or train)	2,300,000
Average number of lines per entry	2.6
Total number of ground entries	884,615
2.5% of ground entries	22,115
Cost for 4 hours of carrier time ($250 per hour)	$1,000
Total cost of truck time	$22,115,000

Table 29 of this document presents a summary of the costs associated with option 7. Also presented in table 29 of this document are the present values of the costs associated with this option using the OMB-recommended discount rates of 3 and 7 percent.

Table 29.--Summary of Costs for Option 7 (4 hour minimum submission time, 1 hour amendment)

	Dollars (thousands)
Learning costs	$66,420
Coordination costs	$31,095
Computer acquisition costs	$7,600
FDA prior notice system cost	$13,000
Annual costs to fill out prior notice screens	$187,500
Additional costs for BRASS users	$48,462
Lost value for Mexican produce	$2,075
Lost value for Canadian produce	$241
Lost value for Central American produce	$130
Lost value for Mexican seafood	$233
Lost value for Canadian seafood	$3,866
Lost value for Central American seafood	$522
Cost for truck time	$22,115
Total first year costs for Option 7	$383,079
Annual costs after first year	$276,938
Present value of costs at 7% for 20 years	$3,033,077
Present value of costs at 3% for 20 years	$4,223,181

g. *Option 8: Minimum prior notice timeframe of 8 hours before arrival; electronic submission of information; any change in information requires resubmission (statutory default option).* Option 8 is to issue an interim final rule that incorporates the default minimum timeframe for prior notices as provided in the Bioterrorism Act. Pre-proposal information and comments on the proposed rule indicated that Canadian and Mexican produce growers and seafood processors are concerned that the longer the minimum time required for the prior notice, the less fresh their products will be when they reach U.S. customers. Less-than-optimal fresh (*i.e.*, lower quality) products would result in a lower price paid for the imported produce or seafood shipments, or possibly even the loss of a customer's business to a domestic producer.

For importers of perishable products such as seafood and produce, the 8-hour minimum time for prior notice is expected to change business practices. How much importer, produce grower, and seafood processor business practices will be affected by prior notice requirements will depend on how early the orders are received compared with how early prior notice must be submitted. Also, as the prior notice submission time increases, the location of the exporter in relation to the U.S. border becomes a more important factor in determining whether changes in business practices are needed.

If the prior notice time for submission is 8 hours instead of 4 hours, the probability of having to resubmit prior notice information will be greater. Now, instead of 20 percent of the importers of perishable products from Canada, Mexico, and Central America having to resubmit their notices, we will assume that the 8-hour submission timetable means that 30 percent will have to resubmit their notices.

As explained in option 2, we based the resubmission rate percentages for perishable products coming from Canada and Mexico on comments FDA received indicating that 40 to 100 percent of the products from these two countries are shipped from locations no more than 4 hours from the border. For shorter prior notice timeframes, starting with the 4-hour option and moving downward in minimum prior notice time, we halved the resubmission rate because every hour decrease in required prior notice submission time will eliminate a significant number of prior notice resubmissions for those facilities close to the border. For options with longer timeframes, however, instead of doubling the resubmission rate, we begin to add an additional 10 percent resubmission rate for each additional 4 hours of required prior notice minimum submission time. We do this because, aside from perishable products and rush orders, most foods are ordered in advance of shipping and the quantities of such foods are easily identifiable; these are orders that will not change and thus will not require resubmission of prior notice.

Carriers of products requiring prior notice may not be able to cross the border for 8 hours or longer, instead of 4 hours. This time for prior notice represents 4.8 percent of the produce life span (8 hours out of 168 hours) and 16.7 percent of the seafood life span (8 hours out of 48 hours). Table 30 of this document shows the loss in value caused by the resubmitted prior notice information for the 30 percent of imported Mexican, Canadian, and Central American perishable seafood and produce affected.

Table 30.--Loss in Value Caused by Resubmitted Prior Notice Under Option 8

Perishable Produce	Dollars
2001 Imported Mexican produce total retail value	$3,458,525,000
4.8% Reduction in value for 30% of Mexican produce	$49,802,760
2001 Imported Canadian produce total retail value	$401,826,000
4.8% Reduction in value for 30% of Canadian produce	$5,786,294
2001 Imported Central American produce total retail value	$217,420,000
4.8% Reduction in value for 30% of Central American produce	$3,130,848
Total Lost Value of Produce	$58,720,000
Perishable Seafood	
2001 Imported Mexican seafood total retail value	$112,277,406
16.7% Reduction in value for 30% of Mexican seafood	$5,625,098
2001 Imported Canadian seafood total retail value	$1,863,217,894
16.7% Reduction in value for 30% of Canadian seafood	$93,347,216
2001 Imported Central American seafood total retail value	$251,796,496
16.7% Reduction in value for 30% of Central American seafood	$12,615,004
Total Lost Value for Seafood	$111,587,000

For this 8-hour prior notice submission timeframe, we include holding time costs paid to carriers of products to be imported. We add in this cost in response to comments indicating that for longer submission timeframes and for products located less than 8 hours from the U.S. border, it is quite possible that the carrier would have to be paid for additional waiting time over what had been established under the current business practices.

We do not have information on the number of import entries that may use additional truck time because of prior notice submission timeframes. We will assume that 30 percent of the 2.3 million lines that entered the United States by ground transportation in fiscal year 2002 (based on OASIS data) would pay for an additional 2 hours of truck time per entry. We use 30 percent as the percentage of trucks delayed to be consistent with our resubmission rate of 30 percent when the prior notice submission timeframe is 8 hours before arrival. These costs are summarized in table 31 of this document.

Table 31.--Cost of Additional Carrier Time for Option 8

2001 OASIS import entry lines by ground transportation (truck or train)	2,300,000
Average number of lines per entry	2.6
Total number of ground entries	884,615
30% of ground entries	265,385
Cost for 2 hours of carrier time ($250 per hour)	$500
Total cost of truck time	$132,692,500

Table 32 of this document presents a summary of the costs associated with option 8. Also presented in table 32 of this document are the present values of the costs associated with this option using the OMB-recommended discount rates of 3 and 7 percent.

Table 32.--Summary of Costs for Option 8
(8-hour minimum prior notice submission time)

	Dollars (thousands)
Learning costs	$66,420
Coordination costs	$31,095
Computer acquisition costs	$7,600
FDA prior notice system cost	$13,000
Annual costs to fill out prior notice screens	$187,500
Additional costs for BRASS users	$48,462
Lost value for Mexican produce	$49,803
Lost value for Canadian produce	$5,786
Lost value for Central American produce	$3,131
Lost value for Mexican seafood	$5,625
Lost value for Canadian seafood	$93,347
Lost value for Central American seafood	$12,615
Cost for truck time	$132,693
Total first year costs for Option 8	$656,897
Annual costs after first year	$550,756
Present value of costs at 7% for 20 years	$5,933,909
Present value of costs at 3% for 20 years	$8,296,901

h. *Option 9: Prior notice required 8 hours before arrival; electronic submission of information; allow changes to the prior notice submission up to 1 hour before arrival.* We now take the estimates in option 8 and adjust them to account for the effects of allowing changes to the prior notice submission. With an original submission time of 8 hours before arrival, it is likely that allowing changes to the original submission, in the form of electronic amendments and updates, would improve the flow of import traffic—especially since comments indicated that between 40 and 100 percent of products coming from Canada and Mexico are within 4 hours of a U.S. border. Regardless of when the order is placed, if the exporting facility of the product is located less than 8 hours from a U.S. border, allowing amendments and updates to prior notice would reduce the notice resubmission rate, and also reduce the loss of value for perishable foods that might otherwise have to wait extra time before crossing the U.S. border.

Again, we note with this option, we assume that the FDA 1-hour time estimate for filling out each prior notice is sufficient, even with the option of amending prior notice information. This time is sufficient because amending or updating a particular item in the prior notice submission should only take a few seconds to a few minutes in time.

For this option, with amendment and updates, we will assume that the number of prior notice resubmissions necessitated by changes in information on the notice will be reduced from 30 to 5 percent. Although the amendment will eliminate the need for notice resubmission for many entries, the uncertainty associated with some shipment information increases as the prior notice minimum submission timeframe increases. Thus, for an 8-hour original submission time frame, it is unlikely that the allowance of an amendment will reduce the prior notice resubmission rate to 2.5 percent as presented in option 7. Instead, we assume that an 8-hour prior notice submission timeframe with a 1-hour amendment will reduce the prior notice resubmission rate to 5 percent.

Option 9 saves 8 hours of wait time per entry for prior notices that can be amended or updated. The 5 percent of imports for which the prior notice cannot be amended, however, will end up waiting at the border or at the manufacturing/processing facility an additional 8 hours before arriving in the United States, which is 4.8 percent of the perishable produce life span (8 hours out of 168 hours) and 16.7 percent of the perishable seafood life span (8 hours out of 48 hours). Table 33 of this document shows the costs of submitting prior notice for an 8-hour minimum time, with a 1-hour amendment and updates, for Canadian, Mexican, and Central American perishable produce and seafood.

Table 33.--Loss in Value Caused by Resubmitted Prior Notice Under Option 8

Perishable Produce	Dollars
2001 Imported Mexican Produce total retail value	$3,458,525,000
4.8% Reduction in value for 5% of Mexican produce	$8,300,460
2001 Imported Canadian produce total retail value	$401,826,000
4.8% Reduction in value for 5% of Canadian produce	$964,382
2001 Imported Central American produce total retail value	$217,420,000
4.8% Reduction in value for 5% of Central American produce	$521,808
Lost Value for Produce	$9,786,000
Perishable Seafood	
2001 Imported Mexican seafood total retail value	$112,277,406
16.7% Reduction in value for 5% of Mexican seafood	$937,516
2001 Imported Canadian seafood total retail value	$1,863,217,894
16.7% Reduction in value for 5% of Canadian seafood	$15,557,869
2001 Imported Central American seafood total retail value	$251,796,496
16.7% Reduction in value for 5% of Central American seafood	$2,102,501
Total Lost Value for Seafood	$18,599,000

Table 34 of this document compares the reduction in the costs of this interim final rule if an amendment and update to prior notice is allowed (option 9) as opposed to the no-amendment option 8.

Table 34.--Comparison of Option 8 With Option 9--Lost Value for Perishables

Perishable Mexican Produce Value Loss	
Option 8--8 hour minimum notice	$41,502,000
Option 9--8 hour notice with changes	$8,300,000
Savings with amendment and update	$33,202,000
Perishable Canadian Produce Value Loss	
Option 8--8 hour minimum notice	$4,822,000
Option 9--8 hour notice with changes	$964,000
Savings with amendment and update	$3,858,000
Perishable Central American Produce Value Loss	
Option 8--8 hour minimum notice	$3,131,000
Option 9--8 hour notice with changes	$522,000
Savings with amendment and update	$2,609,000
Perishable Mexican Seafood Value Loss	
Option 8--8 hour minimum notice	$4,688,000
Option 9--8 hour notice with changes	$938,000
Savings with amendment and update	$3,750,000
Perishable Canadian Seafood Value Loss	
Option 8--8 hour minimum notice	$77,789,000
Option 9--8 hour notice with changes	$15,558,000
Savings with amendment and update	$62,231,000
Perishable Central American Seafood Value Loss	
Option 8--8 hour minimum notice	$12,615,000
Option 9--8 hour notice with changes	$2,103,000
Savings with amendment and update	$10,512,000

Although submitters can amend prior notice information with this option, we assume that those 5 percent of entries that cannot use the amendment, but instead have to wait an additional 8 hours before arriving in the United States would incur at least some truck costs as a result of this wait time. We will therefore assume that 5 percent of the 2.3 million lines that entered the United States by ground transportation in fiscal year 2002 (based on OASIS data) would pay for an additional 8 hours of truck time per prior notice submission. We use 5 percent as the percentage of trucks delayed to be consistent with our resubmission rate of 5 percent when the prior notice submission timeframe is 8 hours before arrival with a 1-hour amendment option. Table 35 shows the costs of truck time associated with those prior notices that cannot be amended.

Table 35.--Cost of Additional Carrier Time for Option 9

2002 OASIS import entry lines by ground transportation (truck or train)	2,300,000
Average number of lines per entry	2.6
Total number of ground entries	884,615
5% of ground entries	44,231
Cost for 8 hours of carrier time ($250 per hour)	$2,000
Total cost of truck time	$88,462,000

Table 36 of this document presents a summary of the costs associated with option 9. Also presented in table 36 of this document are the present values of the costs associated with this option using the OMB-recommended discount rates of 3 and 7 percent.

Table 36.--Summary of Costs for Option 9
(8-hour prior notice minimum submission time, 1-hour amendment)

	Dollars (thousands)
Learning costs	$66,420
Coordination costs	$31,095
Computer acquisition costs	$7,600
FDA prior notice system cost	$13,000
Annual costs to fill out prior notice screens	$187,500
Additional costs for BRASS users	$48,462
Lost value for Mexican produce	$8,300
Lost value for Canadian produce	$964
Lost value for Central American produce	$522
Lost value for Mexican seafood	$938
Lost value for Canadian seafood	$15,558
Lost value for Central American seafood	$2,103
Cost for truck time	$88,462
Total first year costs for Option 9	$470,744
Annual costs after first year	$364,603
Present value of costs at 7% for 20 years	$3,961,802
Present value of costs at 3% for 20 years	$5,527,415

i. *Option 10: Prior notice received by 12 noon of the calendar day before arrival; electronic submission of information; any change in information requires resubmission.* This option requires that prior notice be submitted no later than 12 noon of the calendar day before the expected day of arrival. Under this option, prior notice submitters will have to let FDA know of the incoming food shipment at least 12 hours before the shipment reaches the U.S. port of arrival. This option would likely cause a change in importer business practices and the business practices of their clients in much the same way as option 8, but the potential loss of product value is higher because the minimum prior notice time has increased.

Again, how business practices would be affected by prior notice requirements depends on how early the invoice orders are received, when the truck is loaded, and when prior notice is submitted.

As before, we assume that as the minimum notice time increases, the likelihood of a resubmission also increases. Instead of 30 percent of the importers of perishable products from Canada and Mexico having to cancel their original prior notices and resubmit, we will assume that the 12-hour submission timetable means that 40 percent will have to cancel and resubmit their notices.

We increase the percentage of resubmission this time by 10 percent because as the prior notice time frame increases relative to the time of arrival, it becomes more likely that the prior notice information will change after the notice is submitted to FDA, thus requiring resubmission of the notice. The transporters of products with resubmitted prior notices may then have to wait as long as 12 hours, which affects 7.1 percent of the produce life span (12 hours out of 168 hours) and 25 percent of the seafood life span (12 hours out of 48 hours).

Table 37 of this document shows the loss in value caused by the resubmitted prior notice information for the 40 percent of imported Mexican, Canadian, and Central American perishable seafood and produce that might be affected.

Table 37.--Loss in Value Caused by Resubmitted Prior Notice Under Option 10

Perishable Produce	Dollars
2001 Imported Mexican produce total retail value	$3,458,525,000
7.1% Reduction in value for 40% of Mexican produce	$98,222,110
2001 Imported Canadian produce total retail value	$401,826,000
7.1% Reduction in value for 40% of Canadian produce	$11,411,858
2001 Imported Central American produce total retail value	$217,420,000
7.1% Reduction in value for 40% of Central American produce	$6,174,728
Total Lost Value for Produce	$115,809,000
Perishable Seafood	
2001 Imported Mexican seafood total retail value	$112,277,406
25% Reduction in value for 40% of Mexican seafood	$11,227,741
2001 Imported Canadian Seafood total retail value	$1,863,217,894
25% Reduction in value for 40% of Canadian seafood	$186,321,789
2001 Imported Central American seafood total retail value	$251,796,496
25% Reduction in value for 40% of Central American seafood	$25,179,650
Total Lost Value for Seafood	$222,730,000

For option 10, we also include the costs of additional carrier time that may be necessary due to the longer minimum prior notice submission timeframe. For option 8 we had included the cost of an additional 2 hours of truck time for 30 percent of ground-based import entry lines; for this option we will include the cost of an additional 4 hours of truck time for 40 percent of ground-based import entry lines. We expect the percentage of imported shipments that need extra truck time, and the truck time itself, to increase as the prior notice submission timeframe increases. These costs are summarized in table 38 of this document.

Table 38.--Cost of Additional Carrier Time for Option 10

2001 OASIS import entry lines by ground transportation (truck or train)	2,300,000
Average number of lines per entry	2.6
Total number of ground entries	884,615
40% of ground entries	353,846
Cost for 4 hours of carrier time ($250 per hour)	$1,000
Total cost of truck time	$353,846,000

Table 39 of this document presents a summary of the costs associated with option 10. Also presented in table 39 of this document are the present values of the costs associated with this option using the OMB-recommended discount rates of 3 and 7 percent.

Table 39.--Summary of Costs for Option 10
(12 noon the calendar day before arrival minimum submission time)

	Dollars (thousands)
Learning costs	$66,420
Coordination costs	$31,095
Computer acquisition costs	$7,600
FDA prior notice system cost	$13,000
Annual costs to fill out prior notice screens	$187,500
Additional costs for BRASS users	$48,462
Lost value for Mexican produce	$98,222
Lost value for Canadian produce	$11,412
Lost value for Central American produce	$6,175
Lost value for Mexican seafood	$11,228
Lost value for Canadian seafood	$186,322
Lost value for Central American seafood	$25,180
Cost for truck time	$353,846
Total first year costs for Option 10	$1,046,282
Annual costs after first year	$940,141
Present value of costs at 7% for 20 years	$10,059,060
Present value of costs at 3% for 20 years	$14,089,967

j. *Option 11: Prior notice received by 12 noon of the calendar day before arrival; electronic submission of information; allow changes to the prior notice submission up to 1 hour before arrival.* We now take the estimates in option 10 and adjust them to account for the effects of allowing changes to the prior notice submission. Since prior notice must be submitted by 12 noon on the calendar day before arrival, it is reasonable to expect that not all the information required on a prior notice would be final.

The prior notice requires the addresses of the submitter, importer, owner, and consignee, as well as the carrier, manufacturer, and grower if known. Required information also includes the identity of the article of food, its FDA Country of Production, the country from which the food is shipped, its CBP entry identifier, the date, time, and anticipated port of arrival, and planned shipment information.

Increasing the number of required fields that can be changed in the prior notice before arrival reduces the likelihood that the information would have to be completely resubmitted by importers. This change would lessen the time burden, and therefore, the cost of having to submit prior notice. Allowing a 1-hour amendment and updates to prior notice would provide some flexibility for importers in industries where some of the required information, such as the specific type of food (*i.e.*, codfish instead of fish) of the product being imported, may change or is not known until just before shipping. Again we note that we assume that 1-hour time FDA estimates that it takes to fill out each prior notice is sufficient, even with the option of amending prior notice information. This time is sufficient because amending or updating a particular item in the prior notice submission should only take a few seconds to a few minutes.

For this option with amendment and updates, we assume that the number of prior notice resubmissions necessitated by changes in information on the notice would be reduced from 40 percent (as in option 10) to 10 percent. The notice resubmission rate for this option is expected to be higher than previous options with amendments because the original submission must be given by 12 noon on the calendar day before arrival. The lengthening of the minimum prior notice time period from 8 hours with amendment (option 9) to 12 noon the calendar day before arrival with amendment (this option) suggests that there would be significantly more prior notices initially submitted for which all required information has not been completely determined. Less-than-final information on original prior notice submissions increases the likelihood that the notice will require revision, either in the form of an amendment or in the form of a total resubmission of the original prior notice.

Option 11 saves 12 hours wait time per entry line that can be amended or updated for the prior notice over the time used in option 9. Those shipments, whose prior notice must be completely resubmitted, would wait an additional 12 hours at the manufacturing/processing facility or at the U.S. border; 7.1 percent of the perishable produce life span (12 hours out of 168 hours) and 25 percent of the perishable seafood life span (12 hours out of 48 hours). Table 40 of this document shows the costs of submitting prior notice for a 12-hour minimum time, with a 1-hour timeframe for amendment and updates before arrival, for Canadian, Central American, and Mexican perishable produce and seafood.

Table 40.--Loss in Value Caused by Resubmitted Prior Notice Under Option 11

Perishable Produce	Dollars
2001 Imported Mexican produce total retail value	$3,458,525,000
7.1% Reduction in value for 10% of Mexican produce	$24,555,528
2001 Imported Canadian produce total retail value	$401,826,000
7.1% Reduction in value for 10% of Canadian produce	$2,852,965
2001 Imported Central American produce total retail value	$217,420,000
7.1% Reduction in value for 10% of Central American produce	$1,543,682
Total Lost Value for Produce	$28,953,000
Perishable Seafood	
2001 Imported Mexican seafood total retail value	$112,277,406
25% Reduction in value for 10% of Mexican seafood	$2,806,935
2001 Imported Canadian seafood total retail value	$1,863,217,894
25% Reduction in value for 10% of Canadian seafood	$46,580,447
2001 Imported Central American seafood total retail value	$251,796,496
25% Reduction in value for 10% of Central American seafood	$6,294,912
Total Lost Value for Seafood	$55,682,000

Table 41 of this document compares the reduction in the costs of this rule if an amendment and update to prior notice is allowed (option 11) as opposed to the no-amendment option 10.

Table 41.--Comparison of Lost Value for Perishables Between Option 10 With Option 11

Perishable Mexican Produce Value Loss	
Option 10--12 hour minimum notice	$98,222,000
Option 11--12 hour notice with changes	$24,556,000
Savings with amendment and update	$73,666,000
Perishable Canadian Produce Value Loss	
Option 10--12 hour minimum notice	$11,412,000
Option 11--12 hour notice with changes	$2,853,000
Savings with amendment and update	$8,559,000
Perishable Central American Produce Value Loss	
Option 10--12 hour minimum notice	$6,175,000
Option 11--12 hour notice with changes	$1,544,000
Savings with amendment and update	$4,631,000
Perishable Mexican Seafood Value Loss	
Option 10--12 hour minimum notice	$11,228,000
Option 11--12 hour notice with changes	$2,807,000
Savings with amendment and update	$8,421,000
Perishable Canadian Seafood Value Loss	
Option 10--12 hour minimum notice	$186,322,000
Option 11--12 hour notice with changes	$46,580,000
Savings with amendment and update	$139,742,000
Perishable Central American Seafood Value Loss	
Option 10--12 hour minimum notice	$25,180,000
Option 11--12 hour notice with changes	$6,295,000
Savings with amendment and update	$18,885,000

Although submitters can amend prior notice information with this option, we assume that those 10 percent of entry lines that cannot be amended, but instead have to wait an additional 12 hours to arrive in the United States would incur at least some truck costs corresponding to this wait time. Therefore we will assume that 10 percent of the 2.3 million lines that entered the United States by ground transportation in fiscal year 2002 (based on OASIS data) would pay for an additional 12 hours of truck time per line. We use 10 percent as the percentage of trucks delayed to be consistent with our resubmission rate of 10 percent when the prior notice submission timeframe is noon the calendar day before arrival with a 1-hour amendment option. Table 42 of this document shows the costs of truck time associated with those prior notices that cannot be amended.

TABLE 42.—COST OF ADDITIONAL CARRIER TIME FOR OPTION 11

2002 OASIS import entry lines by ground transportation (truck or train)	2,300,000
Average number of lines per entry	2.6
Total number of ground entries	884,615
10% of ground entries	88,462
Cost for 12 hours of carrier time ($250 per hour)	$3,000
Total cost of truck time	$265,386,000

Table 43 of this document presents a summary of the costs associated with option 11. Also presented in table 43 of this document are the present values of the costs associated with this option using the OMB-recommended discount rates of 3 and 7 percent.

Table 43.--Summary of Costs for Option 11 (12 noon the calendar day before arrival minimum submission time with amendment option 1 hour before arrival)

	Dollars (thousands)
Learning costs	$66,420
Coordination costs	$31,095
Computer acquisition costs	$7,600
FDA prior notice system cost	$13,000
Annual costs to fill out prior notice screens	$187,500
Additional costs for BRASS users	$48,462
Lost value for Mexican produce	$24,556
Lost value for Canadian produce	$2,853
Lost value for Central American produce	$1,544
Lost value for Mexican seafood	$2,807
Lost value for Canadian seafood	$46,580
Lost value for Central American seafood	$6,295
Cost of truck time	$265,386
Total first year costs for Option 11	$703,918
Annual costs after first year	$597,777
Present value of costs at 7% for 20 years	$6,432,050
Present value of costs at 3% for 20 years	$8,996,455

k. *Option 12: Prior notice received by 12 noon of the calendar day before arrival; electronic submission of information; allow changes to the prior notice submission up to 2 hours before arrival (proposed rule).* Option 12 is the option that was originally proposed by FDA. This option requires prior notice submission by noon on the calendar day before arrival, with updates and amendments that can be submitted up to 2 hours before scheduled arrival at a U.S. port. We re-present the option here for comparison, as the costs attributable to each option have changed significantly since the proposed rule stage.

For this option with amendment and updates, we assume that the number of prior notice resubmissions necessitated by changes in information on the notice would be reduced from 40 percent (as in option 10) to 15 percent. The notice resubmission rate for this option is expected to be higher than previous options with amendments because the original submission must be given by 12 noon on the calendar day prior to arrival and the minimum amendment timeframe before arrival is now 2 hours instead of 1 hour.

Option 12 saves 12 hours wait time per entry line that can be amended or updated for the prior notice over the time used in option 10. Those shipments whose prior notice must be completely resubmitted however, would wait an additional 12 hours at the manufacturing/processing facility or at the U.S. border; 7.1 percent of the perishable produce life span (12 hours out of 168 hours) and 25 percent of the perishable seafood life span (12 hours out of 48 hours). Table 44 of this document shows the costs of submitting prior notice for a 12-hour minimum time, with a 2-hour timeframe for amendment and updates before arrival, for Canadian, Central American, and Mexican perishable produce and seafood.

Table 44.--Loss in Value Caused by Resubmitted Prior Notice Under Option 12

Perishable Produce	Dollars
2001 Imported Mexican produce total retail value	$3,458,525,000
7.1% Reduction in value for 15% of Mexican produce	$36,833,000
2001 Imported Canadian produce total retail value	$401,826,000
7.1% Reduction in value for 15% of Canadian produce	$4,279,000
2001 Imported Central American produce total retail value	$217,420,000
7.1% Reduction in value for 15% of Central American produce	$2,316,000
Total Lost Value for Produce	$43,428,000
Perishable Seafood	
2001 Imported Mexican seafood total retail value	$112,277,000
25% Reduction in value for 15% of Mexican seafood	$4,210,000
2001 Imported Canadian seafood total retail value	$1,863,218,000
25% Reduction in value for 15% of Canadian seafood	$69,871,000
2001 Imported Central American seafood total retail value	$251,796,000
25% Reduction in value for 15% of Central American seafood	$9,442,000
Total Lost Value for Seafood	$83,523,000

Although submitters can amend prior notice information with this option, we assume that those 15 percent of entry lines that cannot be amended, but instead have to wait an additional 12 hours to arrive in the United States would incur at least some truck costs corresponding to this wait time. Therefore we will assume that 15 percent of the 2.3 million lines that entered the U.S. by ground transportation in fiscal year 2002 (based on OASIS data) would pay for an additional 12 hours of truck time per line. We use 15 percent as the percentage of trucks delayed to be consistent with our resubmission rate of 15 percent when the prior notice submission timeframe is noon the calendar day before arrival with a 2-hour amendment option. Table 45 of this document shows the costs of truck time associated with those prior notices that cannot be amended.

Table 45.--Cost of Additional Carrier Time for Option 12

2002 OASIS import entry lines by ground transportation (truck or train)	2,300,000
Average number of lines per entry	2.6
Total number of ground entries	884,615
15% of ground entries	132,692
Cost for 12 hours of carrier time ($250 per hour)	$3000
Total cost of truck time	$398,076,000

Table 46 of this document presents a summary of the costs associated with option 12. Also presented in table 46 of this document are the present values of the costs associated with this option using the OMB-recommended discount rates of 3 and 7 percent.

Table 46.--Summary of Costs for Option 12 (12 noon the calendar day before arrival minimum submission time with amendment option 2 hours before arrival)

	Dollars (thousands)
Learning costs	$66,420
Coordination costs	$31,095
Computer acquisition costs	$7,600
FDA prior notice system cost	$13,000
Annual costs to fill out prior notice screens	$187,500
Additional costs for BRASS users	$48,462
Lost value for Mexican produce	$36,833
Lost value for Canadian produce	$4,279
Lost value for Central American produce	$2,316
Lost value for Mexican seafood	$4,210
Lost value for Canadian seafood	$69,871
Lost value for Central American seafood	$9,442
Cost of truck time	$398,076
Total first year costs for Option 12	$878,924
Annual costs after first year	$772,783
Present value of costs at 7% for 20 years	$8,286,066
Present value of costs at 3% for 20 years	$11,600,102

4. Summary of Options

Table 47 of this document gives a summary of the costs associated with the prior notice rule for each option presented. The costs associated with the prior notice requirements are included for each option for all modes of transportation. These costs include the following items: Learning the rule, coordinating the required information, acquiring computer equipment, and annual submission costs for all imported food shipments. The cost of lost value for perishable products is included in each option calculation depending on mode of transportation and minimum prior notice submission time. Lost truck time is included for options with longer timeframes.

BILLING CODE 4160–01–P

Table 47.—Summary of Costs Associated With Each Option

Costs	Description of Option											
	Option 1	Option 2	Option 3	Option 4	Option 5	Option 6	Option 7	Option 8	Option 9	Option 10	Option 11	Option 12
	No regulation	Prior notice 1 hour before arrival	Prior notice 2 hours before arrival	Prior notice 4 hours before arrival	Prior notice 1 hour before arrival for vehicles, 4 hours for trains and planes	Prior notice 2 hours before arrival for vehicles, 4 hours for trains and planes (interim final rule)	Prior notice 4 hours before arrival with 1 hour amendment	Prior notice 8 hours before arrival	Prior notice 8 hours before arrival with 1 hour amendment	Prior notice 12 noon the calendar day before arrival	Prior notice 12 noon the calendar day before arrival with 1 hour amendment	Prior notice 12 noon the calendar day before arrival with 2 hour amendment (proposed rule)
	Dollars (thousands)											
Learning costs	0	66,420	66,420	66,420	66,420	66,420	66,420	66,420	66,420	66,420	66,420	66,420
Coordination costs	0	31,095	31,095	31,095	31,095	31,095	31,095	31,095	31,095	31,095	31,095	31,095
Computer acquisition costs	0	7,600	7,600	7,600	7,600	7,600	7,600	7,600	7,600	7,600	7,600	7,600
FDA prior notice system cost	0	13,000	13,000	13,000	13,000	13,000	13,000	13,000	13,000	13,000	13,000	13,000
Annual costs to fill out prior notice screens	0	187,500	187,500	187,500	187,500	187,500	187,500	187,500	187,500	187,500	187,500	187,500
Additional costs for BRASS users	0	48,462	48,462	48,462	48,462	48,462	48,462	48,462	48,462	48,462	48,462	48,462
Lost value for perishable foods	0	1,616	6,465	56,547	8,174	12,877	6,415	154,561	25,760	307,184	76,796	126,951
Cost for truck time	0	0	0	44,231	0	0	22,115	132,693	88,462	338,462	265,386	398,076
First year cost of each option	0	355,513	360,362	454,675	362,071	366,774	383,079	656,897	470,744	1,046,282	703,918	878,924
Annual cost of each option	0	249,372	254,221	348,534	255,929	260,633	276,938	550,756	364,603	940,141	597,777	772,783
Present value total cost of each option at 7% for 20 years	0	2,741,043	2,792,413	3,791,567	2,810,515	2,860,342	3,033,077	5,933,909	3,961,802	10,059,060	6,432,050	8,286,066
Present value total cost of each option at 3% for 20 years	0	3,813,068	3,885,209	5,288,348	3,910,630	3,980,603	4,223,181	8,296,901	5,527,415	14,089,967	8,996,455	11,600,102

BILLING CODE 4160–01–C

Sensitivity analysis. We estimate that the costs of the interim final rule (option 6) will be about $367 million in the first year and $261 million in later years. At a 7 percent discount rate, the present value of the costs of the interim final rule, discounted 20 years into the future, would be about $3 billion; for a discount rate of 3 percent, the present value costs would be $4 billion. These estimates rely on several important assumptions:

- In option 6, for perishable products from Canada, Mexico, and Central America: 5 percent of prior notices will need to be resubmitted if the notice must be submitted 2 hours before arrival for vehicles; 20 percent of prior notices will need to be resubmitted if the notice must be submitted 4 hours before arrival for air and rail.
- The minimum entry time for food shipments imported over land and by air is a constraining factor for those importers who use these modes of transportation. The additional costs for shipments made over land and by air are greater for a specified minimum prior notice time, the closer the facility is to the U.S. border. Shipments arriving by sea are not likely to be affected by a specified minimum prior notice time.
- The retail value of imported fresh seafood and produce is 100 percent higher than its wholesale value.
- The number of entry lines requiring prior notice will not increase over time.
- Prior notice must be submitted for informal food entries, *i.e.*, international mail.
- BRASS is not compatible with submitting prior notice.

We now present a sensitivity analysis, which shows how our estimates of costs for the interim final rule change if we use different assumptions. We substitute the following assumptions for those used previously:

- In option 6 for perishable products from Canada, Mexico, and Central America: 10 percent of prior notices will need to be resubmitted when the prior notice time is 2 hours before arrival for vehicles; 40 percent of prior notices will need to be resubmitted if the prior notice must be submitted 4 hours before arrival for shipments arriving by rail and air.
- The retail value of imported fresh seafood and produce is 200 percent higher than its wholesale value.
- The number of entry lines requiring prior notice will increase 3 percent per year.
- Prior notice does not need to be submitted for informal food entries, *i.e.*, international mail.
- BRASS is compatible with submitting prior notice.

Tables 48 and 49 of this document show the results of the sensitivity analysis. The tables show that the estimated cost of the interim final rule is most sensitive to the assumed fraction of prior notices that will need to be changed. The present value of the interim final rule is most sensitive to the rate of discount.

Table 48.--Sensitivity Analysis for Assumptions Made for Option 6 (interim final rule)

Test	First Year Cost Under Base Assumption	First Year Cost Under Test Assumption	Change in First Year Cost (or value)	Percent Change in Cost
	($ millions)			
10 and 40% prior notices changed	$367	$380	$13	4
Retail value is 200% of wholesale value	$367	$380	$13	4
Prior notice entries increase 3%	$367	$372	$5	1
Informal entries do not submit prior notice	$367	$329	-$38	-10
BRASS is compatible with submitting prior notice	$367	$318	-$49	-13

Table 49.--Present Values for Sensitivity Analysis for Assumptions Made for Option 6 (interim final rule)

Test	Present Value of Total Cost ($ billions)	Present Value Under Test Assumption ($ billions)	Change in Present Value ($ billions)	Percent Change in Present Value
40% prior notices changed (7% present value)	$2.9	$4.3	$0.1	3
40% prior notices changed (3% present value)	$4	$4.2	$0.2	5
Retail value is 200% of wholesale value (7% present value)	$2.9	$3	$0.1	3
Retail value is 200% of wholesale value (3% present value)	$4	$4.2	$0.2	5
Prior notice entries increase 3% (7% present value)	$2.9	$2.9	$0	0
Prior notice entries increase 3% (3% present value)	$4	$4.1	$0.1	3
Informal entries no prior notice (7% present value)	$2.9	$2.5	-$0.4	-14
Informal entries no prior notice (3% present value)	$4	$3.4	-$0.4	-10
BRASS compatible with prior notice (7% present value)	$2.9	$2.3	-$0.6	-21
BRASS compatible with prior notice (3% present value)	$4	$3.3	-$0.7	-18

5. Benefits

The FDA prior notice system will provide FDA with enhanced knowledge of what articles of food are being imported or offered for import into the United States including the anticipated port of arrival, the country of production, and the specific product identity. Requiring prior notice of imported food shipments and defining the required data information will therefore improve FDA's ability to detect accidental and deliberate contamination of food and to deter deliberate contamination.

Currently, FDA does not receive much advance notice about food products entering the United States from foreign sources, or the location of the food's anticipated port of arrival. With the information required by this interim final rule, FDA will know in advance what articles of food are being imported or offered for import, before they arrive at the port. In the event of a credible threat for a specific product or a specific manufacturer/processor, for example, FDA will be able to mobilize and assist in the detention and removal of products that may be a serious health threat to human or animals.

FDA plans to review prior notices in a central location, on a 24/7 basis. These persons will decide on a case-by-case basis whether the article of food needs to be held. Because prior notice will be linked through ABI/ACS system in most instances, if FDA wishes to stop and hold a shipment for examination, inspection, sampling, or other purpose and does not have personnel at the needed location, pursuant to a Memorandum of Understanding between FDA and CBP, CBP will act on FDA's behalf until FDA personnel can reach the location. The prior notice system linked through ABI/ACS will allow FDA to send messages to the screens of individual CBP staff, ensuring that time sensitive information is received and acted upon by the appropriate persons. Having notice of an article of food imported or offered for import into the United States before it reaches a U.S. port will allow FDA personnel to be ready to respond to shipments that appear to pose a significant and immediate serious risk to public health.

Historical evidence suggests that a terrorist or other intentional strike on the food supply is a low-probability, but potentially high-cost event. FDA has conducted its own assessment of the vulnerability of the U.S. food supply and additionally has commissioned two threat assessments, one through the Battelle Memorial Institute and a second through the Institute of Food Technologists. These assessments determined the most serious risks of intentional contamination during various stages of food production and distribution. The results of these assessments are classified. We have also received intelligence information regarding threats to the food supply that are guiding our food security efforts. Nonetheless, FDA lacks data to estimate the likelihood of a strike occurring. Without knowing the likelihood of a strike occurring, we cannot quantitatively measure the reduction in probability of an event occurring.

We can, however, show the potential risk associated with contaminated imported foods. Many past outbreaks have been traced to imported foods (Refs. 12 and 13); table 50 of this document gives some examples. An intentional attack on the food supply that sought to disrupt the food supply and sicken many U.S. citizens could be much larger than the examples given in table 50.

The potential hazard associated with a single shipment of imported food is large. For example, a single line entry from OASIS for a truckload of imported cantaloupe (gross weight 1,000 lb) represents 510 lb (231,332 grams) (g) of edible food, or 1,652 (140 g) servings. If an entire line or shipment is contaminated, then that number of servings represents the potential

exposure to the hazard. The FDA prior notice system alone will not prevent such exposures, but by increasing the amount of information available and giving FDA notice in advance of arrival, an essential component of the barrier against accidental or deliberate contamination of food is formed. FDA is better able to integrate intelligence, vulnerability, and entry data to plan import surveillance activities as a result.

Table 50.--Examples of Outbreaks Resulting From Imported Foods

Pathogen	Location and Year	Vehicle	Number of Cases
Salmonella Poona	Western United States, 2001	Cantaloupe (from Mexico)	29 cases, 4 hospitalizations, 2 deaths
S. Lexington S. Java ETEC; E. coli O6:H16 and O25:NM Giardia	Cruise ship, 2000	Raw frozen shrimp cooked on board	224 cases, with 9 (possibly more) laboratory confirmed
Cyclospora cayaetanensis	United States and Canada, 1996	Raspberries (probably imported from Guatemala)	1,465 cases identified, fewer than 20 hospitalizations
Salmonella typhi, hepatitis A	Florida, 1996	Homemade cheese (from Mexico)	9 cases Salmonella, 14 cases Hepatitis A
Salmonella Stanley	17 States, 1995	Alfalfa sprouts (seeds from Netherlands)	242 cases
Shigella flexneri, type 6 (SF6)	Illinois, 1994	Green onions (Mexico suspected)	171 cases

We can examine the high costs of a potential terrorist event by comparing costs of responding to a terrorist event with and without the advantage of having the FDA prior notice system. For example, if U.S. officials or FDA receives intelligence concerning the possibility of an intentional contamination of an incoming food shipment, in absence of prior notice, even with information on the type of food product, officials would be unlikely to know when and where the food was expected to cross U.S. borders. In this case, it is likely that officials would slow down the movement of food shipments through the border ports or possibly even close down some ports of entry to prevent the contaminated articles from entering the United States.

Information on the west coast port lock-out during Fall 2002, indicated that the closing of 29 major west coast ports cost the U.S. economy $1 billion a day (Refs. 14 and 15). Given that there are 361 ports of entry for the entire United States, if U.S. officials had to close all ports to prevent contaminated food from entering the country, the U.S. economy could lose upwards of $12.5 billion each day the ports remain closed. This cost exceeds the first year costs ($367 million), the annual costs ($261 million), and the present value of costs ($3 billion at the 7 percent discount rate and $4 billion at the 3 percent discount rate) for the chosen option of this rule. Thus, having the FDA prior notice system does not eliminate, but may significantly reduce the costs of a terrorist attack on the food supply as compared to not having the system.

TABLE 51.—COST BENEFIT SUMMARY TABLE

	Annualized costs over 20 years at 7% discount rate ($ millions)	Annualized costs over 20 years at 3% discount rate ($ millions)
Option 5—2 hour prior notice for vehicle, 4 hour for rail and air, 8 hour vessels (interim final rule)	$272	$269
Benefits—FDA will know in advance what articles of food are being imported or offered for import, before they arrive at the port. In the event of a credible threat, FDA will be able to mobilize and assist in the detention and removal of specific products that may pose a serious health threat to human or animals.		

B. Small Entity Analysis (or Final Regulatory Flexibility Analysis)

FDA has examined the economic implications of this interim final rule as required by the Regulatory Flexibility Act (5 U.S.C. 601–612). If a rule has a significant economic impact on a substantial number of small entities, the Regulatory Flexibility Act requires agencies to analyze regulatory options that would lessen the economic effect of the rule on small entities consistent with statutory objectives. FDA finds that this interim final rule will have a significant economic impact on a substantial number of small entities.

1. Number of Establishments Affected

FDA finds that this interim final rule would affect 77,427 U.S. importers. Most of these importers have fewer than 500 employees, thus making them small

businesses as defined by the Small Business Administration. Because most of the importers affected are small, all options considered in the Benefit-Cost Analysis in section IV.A of this document are regulatory relief options.

A few comments stated that FDA's analysis of the impact of prior notice on small businesses was inadequate. The comments also wished to see a breakdown of costs of the rule per small business by industry sector. Unfortunately, FDA does not have detailed information on which businesses subject to this interim final rule are small, nor did comments provide such information. Therefore, FDA cannot perform a detailed analysis of the costs per small business by industry sector. With limited data, FDA can estimate an average cost per importer for some of the prior notice cost categories, estimate some costs of the rule per retail establishment, and provide an average estimate of cost per establishment if the costs of the rule were evenly distributed across the supply chain.

2. Costs per Entity

This interim final rule requires FDA be notified of incoming products electronically before the food arrives at a U.S. port. The annual cost of doing so is about $2,400 per submitter (based on $187.5 million in notification costs/ 77,427 U.S. importers). This calculation is presented in table 52 of this document. Also presented in table 52 is the cost per importer to learn about the prior notice interim final rule and to coordinate the information that needs to be submitted; the costs per importer of these two activities are about $850 and $400, respectively.

As discussed and shown in tables 1B and 2 of this document, about 3,100 U.S. importers are estimated to not have electronic transmitting capacity and will have to obtain computer equipment (at a cost of about $2,000 per importer) and Internet access (at a cost of about $240 annually) in order to comply with this interim final rule. FDA could not provide flexibility for those importers who do not have electronic transmitting capacity, because paper notices could not be submitted in the prior notice timeframe and would therefore actually be more burdensome to importers, and because FDA would not be able to receive, review, and respond to paper prior notices that are submitted on a routine basis.

This interim final rule will cause some loss of product value if the prior notice requirement causes perishable products to have to wait any length of time before arriving at a U.S. port. The costs of lost product value vary with the required notice time. FDA does not have information on the subset of importers who will be affected by these costs; therefore, we cannot calculate a cost per importer for these potential losses. We do discuss the various costs associated with this possibility in the options outlined previously.

Table 52 of this document shows the average costs per importer to learn the rule, coordinate information, and submit prior notice. Table 52 also shows the average costs to the importer to absorb the costs of not being able to use BRASS and to absorb costs of lost value of perishable products. Table 52 also shows these average costs per retail establishment and per establishment across the supply chain. Numbers for establishments come from the County Business Patterns, U.S. Census, and Non-Employer statistics. A complete discussion of these establishment numbers can be found in the FDA Registration of Food Facilities interim final rule (Ref. 20).

Table 52.--Costs per Importer and per Establishment

Activity	Total Costs	Cost per importer (n= 77,427)
Learning costs	$66,240,000	$856
Coordination costs	$31,095,000	$402
Annual costs to fill out prior notice screens	$187,500,000	$2,422
Costs for BRASS users	$48,462,000	$626
Lost value for perishables	$12,877,000	$166
Total estimated average costs per importer		$4,472
Total estimated average costs per retail establishment (n= 238,697)		$1,450
Total estimated average costs per establishment in the distribution chain (n= 454,968)		$761

3. Additional Flexibility Considered

Because of the requirements of the Bioterrorism Act, FDA is precluded from selecting some of the options that typically would be considered to lessen the economic effect of the interim final rule on small entities, including granting an exemption to small entities. FDA concludes that it would be inconsistent with section 307 of the Bioterrorism Act to allow small entities a later effective date, since the Bioterrorism Act establishes an effective date for prior notice that applies to FDA-regulated food imported or offered for import into the United States, whether or not FDA has issued a final rule by this deadline. Thus, FDA concludes that Congress intended for prior notice to apply to FDA-regulated food by the effective date established in the Bioterrorism Act.

C. Unfunded Mandates

Title II of the Unfunded Mandates Reform Act of 1995 (Public Law 104–4) requires cost-benefit and other analyses before any rulemaking if the rule would include a ''Federal mandate that may result in the expenditure by State, local, and tribal governments, in the aggregate, or by the private sector, of $100,000,000 or more (adjusted annually for inflation) in any 1 year.'' The current inflation-adjusted statutory threshold is $113 million. FDA has determined that this interim final rule is significant under the Unfunded Mandates Reform Act. FDA has carried out the cost-benefit analysis in preceding sections (*see* table 47 of this document for the total costs). The other requirements under the Unfunded Mandates Act of 1995 include assessing the rule's effects on the following factors:

- Future costs;
- Particular regions, communities, or industrial sectors;
- National productivity;
- Economic growth;
- Full employment;
- Job creation; and
- Exports.

The issues listed in the bullets are covered in detail in the cost benefit analysis of the preceding sections, with the exception of the trade effects of this interim final rule, which we will discuss here.

Although most of the information required for prior notice is already supplied to CBP when importing food products, this new notice requirement may cause a reduction of imports of certain food products into the United States. For example, food manufacturers, processors, or growers may choose to stop exporting food products to the United States if the additional costs of complying with the prior notice increase the price of the imported product (or perhaps decrease the quality of the product) to the point where they cannot compete with a domestically-grown or produced product. This may be the case for food products that are grown or produced in the United States with an elastic enough supply to meet consumer demand without large increases in price. For example, if Florida-grown and California-grown oranges meet the demand for the fruit in this country at or close to current prices, then it is unlikely that the United States will import many oranges from other countries, if the price of the imported product rises (or the product quality is lowered) because of the prior notice requirement.

On the other hand, for example, there are products for which substitutes, and more specifically, U.S. grown or produced substitutes, are not available. In these cases, and in cases where U.S. demand for the product greatly exceeds domestic supply, importers will pass along to the consumer any increase in price for the product brought about by the prior notice requirement (as long as the quality and other attributes of the product remain intact). For example, exotic fruits such as coconuts, mangoes, and papayas are not grown in significant quantities in the United States; if the demands for those fruits are relatively inelastic, there will not be a significant decrease in quantity demanded in the United States when the importers raise the price of the fruit to cover the costs of submitting prior notice.

D. SBREFA Major Rule

The Small Business Regulatory Enforcement Fairness Act of 1996 (SBREFA) (Pub. L. 104–121) defines a major rule for the purpose of congressional review as having caused or being likely to cause one or more of the following: An annual effect on the economy of $100 million or more; a major increase in costs or prices; significant adverse effects on competition, employment, productivity, or innovation; or significant adverse effects on the ability of U.S.-based enterprises to compete with foreign-based enterprises in domestic or export markets. In accordance with SBREFA, OMB has determined that this interim final rule is a major rule for the purpose of congressional review.

VI. Paperwork Reduction Act of 1995

This interim final rule contains information collection provisions that are subject to review by OMB under the Paperwork Reduction Act of 1995 (44 U.S.C. 3501–3520). A description of these provisions is given below with an estimate of the annual reporting burden. The estimate includes the time for reviewing instructions, searching existing data sources, gathering and maintaining the data needed, and completing and reviewing each collection of information, *i.e.,* each prior notice.

Title: Prior Notice of Imported Food.

A. Description

Section 801(m) of the FD&C Act (21 U.S.C. 381(m)) requires prior notice to the Secretary of Health and Human Services (the Secretary) of an article of food that is being imported or offered for import into the United States. Section 801(m)(1) of the FD&C Act states that the Secretary shall require submission of notice providing the identity of each of the following: The article of food; the manufacturer; the shipper; the grower, if known at the time of notification; the originating country; the shipping country; and the anticipated port of arrival. Section 801(m)(2)(A) of the FD&C Act states that the Secretary shall by regulation prescribe the time of submission of the notification in advance of importation or the offering of the food for import, which period shall be no less than the minimum amount of time necessary for the Secretary to receive, review, and appropriately respond to such notification, but may not exceed 5 days. FDA's prior notification of imported food shipments interim final rule implements these statutory provisions.

1. Comments on the Burden of Information Collection

Some comments on the proposed burden of information collection stated that the information collection would not be necessary if ABI/ACS could be used to submit the required information. Other comments stated that the information collection was unproductive and unduly burdensome for the benefits it would provide. Still other comments stated that FDA had underestimated the hours associated with the reporting burden.

FDA's agreement with CBP to allow most prior notices to be submitted through ABI/ACS will greatly reduce the burden of this new collection of information.

A few comments were concerned that FDA had underestimated the proposed burden because they did not understand that FDA had calculated the submitting burden based on import entries, not entry lines. For each import entry, the prior notice or notices are expected to take about an hour to file. The prior notice or notices for each import entry would cover approximately 2.6 lines, with each line representing a different article of food to be imported. For this interim final rule burden of information analysis, FDA has clarified how the estimates were calculated to allay the comments' concerns.

2. Information Collection Burden Estimate

FDA estimates the burden for this information collection as follows:

Table 53.--Estimated Annual Reporting Burden

21 CFR Section	No. Of Respondents	Annual Frequency per Response	Total Annual Responses	Hours per Response	Total Capital Costs	Operating and Maintenance Costs	Total Hours
1.279-1.285[1]	77,427	1	77,427	40	$6,194,000	$743,000	3,097,080
1.279-1.285[1]	7,743	1	7,743	40	$620,000	$74,400	309,715
1.280-1.281[2]	77,427	84	6,500,000	0.384	$0	$0	2,500,000
1.282[2]	77,427	3.36	260,000	0.5	$0	$0	130,000
1.283(a)(2)(iv), 1.285(c)(4)[2]	77,427	0.168	13,000	0.25	$0	$0	3,250
1.283(a)(5)(ii)[2]	77,427	1.26	97,500	1	$0	$0	97,500
1.283(a)(7)[2]	77,427	0.105	8,125	0.25	$0	$0	2,031
1.283(a)(6)(i)-(a)(6)(iv), 1.285(f)(1)-(f)(4)[2]	77,427	0.168	13,000	8	$0	$0	104,000
Total one time burden hours							3,406,795
Total recurring burden hours							2,836,781

[1] One time burden.
[2] Recurring burden.

B. Hour Burden Estimate

1. Number of Establishments Affected

Using 2001 fiscal year information from OASIS (industry codes 02 through 52, 54, and 70 through 72), FDA has determined that there are approximately 77,427 importers and consignees who receive shipments of food imported or offered for import into the United States. FDA does not have specific information on who will submit prior notice since there are no restrictions on who can submit prior notice. Therefore, FDA estimates prior notice submission information based on the 77,427 importers of food in OASIS.

2. New and Closing Importers

In addition to the U.S. importers currently in existence, in future years new import businesses will open and some existing import businesses will close. These new submitters would have to become familiar with the FDA prior notice system and possibly obtain computer equipment and Internet access to comply with prior notice requirements.

According to the Small Business Administration Office of Advocacy, in 2001, about 10 percent of all businesses were new and 10 percent of businesses closed. Using the 10 percent opening and closing business statistic, and given that there are currently 77,427 U.S. importers, FDA assumes that on a yearly basis 7,743 importers will leave the market and 7,743 importers will enter the market.

3. Hour Burden Estimate Researching the Prior Notice Requirement

a. *Learning the interim final rule.* To become familiar with the requirements for this interim final rule, FDA estimates that one manager and two subordinates from each importing business will attend an 8-hour training session on the prior notice regulation. This one-time research burden for the existing importers is about 1,858,248 hours (3 people per firm × 8 hours × 77,427 importers). This portion of the estimate is for 21 CFR part 1, subpart I, 1.279 through 1.285 and is shown in row 1 of table 53 of this document.

In the years that follow the startup year for prior notice, it is reasonable to expect a certain percentage of importing firms to enter and leave the market. In addition to the first year burden to research prior notice, it is expected that 185,832 hours will be spent annually researching the prior notice requirement by the anticipated 7,743 new importers entering the market annually that must learn about prior notice (3 people per firm × 8 hours × 7,743 new importers). This portion of the estimate is for 21 CFR part 1, subpart I, 1.279 through 1.285 and is shown in row 2 of table 53 of this document.

b. *Coordinating the information.* FDA assumes it will take about 2 business days (16 hours) for an administrative employee of the prior notice-submitting firm to coordinate with others to establish new business practices required to receive the information needed for prior notice. We assume this set-up time is sufficient to coordinate information for existing importing accounts. The total hours needed to gather information for existing accounts is 1,238,832 (77,427 importing firms × 16 hours per firm). This portion of the estimate is for 21 CFR part 1, subpart I, 1.279 through 1.285 and is shown in row 1 of table 53 of this document. Thus, the total burden listed in row 1 is 1,858,248 hours + 1,238,832 hours = 3,097,080 one-time burden hours to learn the rule and coordinate information.

In addition to the first year coordination burden, we expect importing businesses to see a 10 percent turnover in their accounts. Thus, in future years, importing firms will spend 123,883 hours to gather information on their new accounts. This portion of the estimate is for 21 CFR part 1, subpart I, 1.276 through 1.285 and is shown in row 2 of table 53 of this document. Thus, the total burden listed in row 2 is 185,832 hours + 123,883 hours = 309,715 one-time burden hours for new firms to learn the rule and coordinate information.

4. Submitting Prior Notice

To estimate the repetitive effort of submitting a prior notice, FDA assumes the activity takes 1 hour each time an import entry is submitted. An import

entry, on average, constitutes 2.6 different articles of food; a prior notice must be submitted for each article of food. Therefore we estimate that submitting prior notice for each article of food will take 23 minutes to complete (23 minutes per line = 60 minutes/2.6 lines per entry). On an annual basis, submitting prior notice will take about 2.5 million hours (23 minutes (or 0.384 hours) per prior notice × 6.5 million notices). This estimate is for 21 CFR part 1, subpart I, 1.280 through 1.281 and is shown in row 3 of table 53 of this document.

FDA does not have information on how many prior notices will come from each of the 77,427 importers. However, we assume that 6.5 million prior notices will be submitted annually based on fiscal year 2002 OASIS information and estimates of prior notice capacity. We divide 6.5 million lines by the 77,427 importers to get an average annual response frequency per importer of 84 notices.

5. Changes to a Confirmed Prior Notice

The annual total number of changes made by importers to confirmed prior notices will vary depending on the minimum prior notice submission time required. For example, more confirmed prior notices will likely have to be changed if the minimum prior notice submission time is noon the calendar day before arrival as opposed to a minimum submission time of 2 hours before arrival. FDA's interim final rule requires a minimum prior notice submission time for each of the following situations: 2 hours before arrival for articles of food imported by vehicle, 4 hours before arrival for articles of food imported by rail and air, and 8 hours before arrival for articles of food imported by vessel.

By combining the percentages by mode of transport and taking into account the location of the exporting country, we assume that about 4 percent of all prior notices (260,000 notices) will have to be resubmitted after confirmation is received from FDA. We assume that changes in the prior notices will be minor adjustments; therefore, both the cancellation of the original notice and the resubmission of the new notice are estimated to take about 30 minutes. This estimate is for 21 CFR part 1, subpart I, 1.282 and is shown in row 4 of table 53 of this document.

6. Refused Admission

Although FDA at this time does not have enough information to estimate a percent of refusals under the new prior notice program, for the purposes of this analysis FDA estimates the reporting burden assuming a 2 percent refused admission rate.

An imported food product is subject to refusal under section 801(m)(1) of the FD&C Act if it arrives at the port of arrival with untimely, inaccurate, or no prior notice. FDA estimates that about 130,000 of the annual prior notices will be subject to refusal (2 percent of 6.5 million prior notices).

If an article of food is refused under section 801(m)(1) of the FD&C Act, the food must be held until the prior notice has been correctly submitted or until the product is exported. FDA must be notified of the location where the food has been or will be moved within 24 hours of refusal.

In many cases, the location notice will be given as part of a correction and resubmission, as described in the next section. FDA estimates that 13,000 out of the 130,000 annual refusals will give the location notice separately and that it will take about 15 minutes per prior notice to notify FDA of the shipment's location. This will result in about 3,250 hours (13,000 notices × 0.25 hours). This estimate is for 21 CFR part 1, subpart I, 1.283(a)(2)(iv) and 1.285(c)(4) and is shown in row 5 of table 53 of this document.

7. Correction and Resubmission of Prior Notice

FDA estimates that 97,500 out of the 130,000 annual refusals will be because of inaccurate prior notice requiring resubmission, or because no prior notice was submitted. FDA estimates that it will take an hour to cancel, correct, and resubmit, or submit (in the case of no notice) each of these 97,500 notices. This estimate is for 21 CFR part 1, subpart I, 1.283(a)(5)(ii) and is shown in row 6 of table 53 of this document.

8. Exportation of Products Refused Admission

Some importers of articles of food that have been refused admission into the United States will decide to export their product rather than try to submit or resubmit prior notice. FDA estimates that this will occur for only about 25 percent of the 130,000 articles refused admission for inaccurate, untimely, or no prior notice. If an article of food is refused admission under section 801(m)(1) of the FD&C Act and exported, FDA requests, but does not require, that prior notice be cancelled. FDA estimates that for these 32,500 articles of food, prior notice will be cancelled 25 percent of the time and that this cancellation will take 15 minutes per article. This estimate is for 21 CFR part 1, subpart I, 1.283(a)(7) and is shown in row 7 of table 53 of this document.

9. FDA Review Request

If an article of food to be imported is refused under section 801(m)(1) of the FD&C Act or placed under hold under section 801(1), a request may be submitted asking for an FDA review. FDA estimates that of the 130,000 articles of food that are refused admission under section 801(m)(1) of the FD&C Act or placed under hold under section 801(1) of the FD&C Act yearly, 10 percent will request an FDA review (13,000 reviews). FDA estimates that it will take the requestor about 8 hours to prepare the factual and legal information necessary to request a review. Thus, importers will spend about 104,000 hours on review requests annually. This estimate is for 21 CFR part 1, subpart I, 1.283(a)(6)(i) through (a)(6)(iv) and 1.285(f)(1) through (f)(4) and is shown in row 8 of table 53 of this document.

C. Capital Cost and Operating and Maintenance Cost Burden

Since all prior notices must be submitted electronically, we assume that the 3,097 responsible parties without Internet access (4 percent of the 77,427 importers) will have to purchase the appropriate computer equipment and gain Internet access to transmit the information. Assuming computer equipment costs each firm $2,000 and yearly Internet access costs each firm $240 ($20 per month for 12 months), this results in a one-time computer cost for these facilities of $6,194,000 and a recurring Internet access cost of $743,000. This estimate is for 21 CFR part 1, subpart I, 1.279 through 1.285 and is included in row 1 of table 53 of this document.

For the 7,743 new firms that enter the import market each year, we expect 310 of them to need to purchase computer equipment and obtain Internet access. On an annual basis we expect new importers to spend $620,000 on computers and $74,400 on Internet access to be able to submit their prior notice information. This estimate is for 21 CFR part 1, subpart I, 1.279 through 1.285 and is included in row 2 of table 53 of this document.

The information collection provisions of this interim final rule have been submitted to OMB for review.

Prior to the effective date of this interim final rule, FDA will publish a notice in the **Federal Register** announcing OMB's decision to approve, modify, or disapprove the information collection provisions in this interim final rule. An agency may not conduct

or sponsor, and a person is not required to respond to, a collection of information unless it displays a currently valid OMB control number.

VII. Analysis of Environmental Impact

The agency has carefully considered the potential environmental effects of this action. FDA has concluded under 21 CFR 25.30(h) that this action is of a type that does not individually or cumulatively have a significant effect on the human environment. Therefore, neither an environmental assessment nor an environmental impact statement is required.

VIII. Federalism

FDA has analyzed this interim final rule in accordance with the principles set forth in Executive Order 13132. FDA has determined that the rule does not contain policies that have substantial direct effects on the States, on the relationship between the National Government and the States, or on the distribution of power and responsibilities among the various levels of government. Accordingly, the agency has concluded that the rule does not contain policies that have federalism implications as defined in the Executive order and, consequently, a federalism summary impact statement is not required.

IX. References

The following references have been placed on display in the Division of Dockets Management (*see* **ADDRESSES**) and may be seen by interested persons between 9 a.m. and 4 p.m., Monday through Friday. FDA has verified the Web site addresses, but is not responsible for any subsequent changes to the Web sites after this document publishes in the **Federal Register**.

1. Ruling NY G89921 (June 12, 2001), U.S. Bureau of Customs and Border Protection, *http://rulings.customs.gov.*

2. Bureau of Economic Analysis, *http://www.bea.doc.gov.*

3. U.S. Department of Labor, Bureau of Labor Statistics, ''National Compensation Survey: Occupation Wages in the United States, 2000, Summary 01–04,'' available at *http://www.bls.gov/ncs/ocs/sp/ncbl0354.pdf.*

4. USDA Agricultural Marketing Service, March 2002, ''Fresh Fruits and Vegetable Shipments,'' *http://www.ams.usda.gov.*

5. Kasmire, Dr. Robert F., Vegetable Marketing Specialist, *http://www.thepacker.com/rbcs/handbookarticles/properis.htm,* accessed on 9.16.02.

6. USDA Agricultural Marketing Service produce point price reports for various border crossings for the dates September 12, 2002, and September 16, 2002, *http://www.ams.usda.gov.*

7. Florida Department of Agriculture and Consumer Services (FDACS), *http://www.ffva.com/rps.htm.*

8. National Marine Fisheries Service, Fisheries Statistics and Economics Division, *http://www.st.nmfs.gov,* accessed September 2002.

9. Florida Department of Agriculture and Consumer Services, *http://doacs.state.fl.us/press/1999/090999.html* and *http://www.ffva.com/rps.htm.*

10. Center for Food Safety and Applied Nutrition, *http://www.cfsan.fda.gov/~dms/qa-sto8.html.*

11. Small Business Administration Office of Advocacy, ''Small Business by the Numbers'', May 2002, *http://www.sba.gov/advo/.*

12. Herwaldt B.L., M.L. Ackers, and Cyclospora Working Group, ''An Outbreak in 1996 of Cyclosporiasis Associated With Imported Raspberries,'' *New England Journal of Medicine,* May 29, 1997, 1548–1556.

13. Food Safety: Federal Efforts to Ensure the Safety of Imported Foods Are Inconsistent and Unreliable, GAO Publication, April 1998, *http://www.gao.gov.*

14. ''Port Lockout Could Harm U.S. Economy,'' *http://www.firstcoastnews.net/news/2002–10–01/usw_portlockout.asp.*

15. ''Transportation official says strike at U.S. port would ripple across globe,'' *http://www.govexec.com/dailyfed/0202/022702gsn1.htm.*

16. ''The Informal Sector in El Salvador,'' Embassy of the United States of America in El Salvador, *http://sansalvador.usembassy.gov/* Select Economic Info (left column), then select the first option ''Economic and Commercial Reports, Updates,'' at next screen under Socio-Economic Reports, select the last article ''The Informal Sector in El Salvador, 1999,'' and Import Alert 1A1211, FDA Guidance, March 1998, *http://www.fda.gov/ora/_import_ia1211.html.*

17. Guidance for Industry, Importers and Filers, Food Security Preventive Measures Guidance, FDA Publication, March 2003.

18. Investigations Operations Manual, FDA Publication, page 179.

19. FDA Registration of Food Facilities interim final rule, published elsewhere in the issue of the **Federal Register**.

List of Subjects in 21 CFR Part 1

Cosmetics, Drugs, Exports, Food labeling, Imports, Labeling, Reporting and recordkeeping requirements.

■ Therefore, under the Federal Food, Drug, and Cosmetic Act and under authority delegated to the Commissioner of Food and Drugs, 21 CFR part 1 is amended as follows:

PART 1—GENERAL ENFORCEMENT REGULATIONS

■ 1. The authority citation for 21 CFR part 1 continues to read as follows:

Authority: 15 U.S.C. 1453, 1454, 1455; 19 U.S.C. 1490, 1491; 21 U.S.C. 321, 331, 332, 333, 334, 335a, 343, 350c, 350d, 352, 355, 360b, 362, 371, 374, 381, 382, 393; 42 U.S.C. 216, 241, 243, 262, 264.

■ 2. Subpart I, consisting of §§ 1.276 through 1.285, is added to part 1 to read as follows:

Subpart I—Prior Notice of Imported Food

General Provisions

Sec.
1.276 What definitions apply to this subpart?
1.277 What is the scope of this subpart?

Requirements to Submit Prior Notice of Imported Food

1.278 Who is authorized to submit prior notice?
1.279 When must prior notice be submitted to FDA?
1.280 How must you submit prior notice?
1.281 What information must be in a prior notice?
1.282 What must you do if information changes after you have received confirmation of a prior notice from FDA?

Consequences

1.283 What happens to food that is imported or offered for import without adequate prior notice?
1.284 What are the other consequences of failing to submit adequate prior notice or otherwise failing to comply with this subpart?
1.285 What happens to food that is imported or offered for import from unregistered facilities that are required to register under 21 CFR part 1, subpart H?

General Provisions

§ 1.276 What definitions apply to this subpart?

(a) *The act* means the Federal Food, Drug, and Cosmetic Act.

(b) The definitions of terms in section 201 of the act (21 U.S.C. 321) apply when the terms are used in this subpart, unless defined below.

(1) *Calendar day* means every day shown on the calendar.

(2) *Country from which the article originates* means FDA Country of Production.

(3) *Country from which the article is shipped* means the country in which the article of food is loaded onto the conveyance that brings it to the United States or, in the case of food sent by international mail, the country in which the article will be mail.

(4) *FDA Country of Production* means:

(i) For an article of food that is in its natural state, the country where the article of food was grown, including harvested or collected and readied for shipment to the United States. If an article of food is wild fish, including seafood that was caught or harvested outside the waters of the United States by a vessel that is not registered in the United States, the FDA Country of Production is the country in which the vessel is registered. If an article of food that is in its natural state was grown,

including harvested or collected and readied for shipment, in a Territory, the FDA Country of Production is the United States.

(ii) For an article of food that is no longer in its natural state, the country where the article was made; except that, if an article of food is made from wild fish, including seafood, aboard a vessel, the FDA Country of Production is the country in which the vessel is registered. If an article of food that is no longer in its natural state was made in a Territory, the FDA Country of Production is the United States.

(5) *Food* has the meaning given in section 201(f) of the act,

(i) Except for purposes of this subpart, it does not include:

(A) Food contact substances as defined in section 409(h)(6) of the act (21 U.S.C. 348(h)(6)); or

(B) Pesticides as defined in 7 U.S.C. 136(u).

(ii) Examples of food include fruits, vegetables, fish, including seafood, dairy products, eggs, raw agricultural commodities for use as food or as components of food, animal feed (including pet food), food and feed ingredients, food and feed additives, dietary supplements and dietary ingredients, infant formula, beverages (including alcoholic beverages and bottled water), live food animals, bakery goods, snack foods, candy, and canned foods.

(6) *Grower* means a person who engages in growing and harvesting or collecting crops (including botanicals), raising animals (including fish, which includes seafood), or both.

(7) *International mail* means foreign national mail services. International mail does not include express carriers, express consignment operators, or other private delivery services.

(8) *No longer in its natural state* means that an article of food has been made from one or more ingredients or synthesized, prepared, treated, modified, or manipulated. Examples of activities that render food no longer in its natural state are cutting, peeling, trimming, washing, waxing, eviscerating, rendering, cooking, baking, freezing, cooling, pasteurizing, homogenizing, mixing, formulating, bottling, milling, grinding, extracting juice, distilling, labeling, or packaging. Crops that have been cleaned (*e.g.*, dusted, washed), trimmed, or cooled attendant to harvest or collection or treated against pests, waxed, or polished are still in their natural state for purposes of this subpart. Whole fish headed, eviscerated, or frozen attendant to harvest are still in their natural state for purposes of this subpart.

(9) *Port of arrival* means the water, air, or land port at which the article of food is imported or offered for import into the United States, *i.e.*, the port where the article of food first arrives in the United States. This port may be different than the port where consumption or warehouse entry or foreign trade zone admission documentation is presented to the United States Bureau of Customs and Border Protection (CBP).

(10) *Port of entry*, in sections 801(m) and 801(l) of the act, means the port of entry as defined in 19 CFR 101.1.

(11) *Registration number* refers to the registration number assigned by FDA under section 415 of the act (21 U.S.C. 350d) and 21 CFR part 1, subpart H.

(12) *Shipper* means the owner or exporter of the article of food who consigns and ships the article from a foreign country or the person who sends an article of food by international mail to the United States.

(13) *United States* means the Customs territory of the United States (*i.e.*, the 50 states, the District of Columbia, and the Commonwealth of Puerto Rico), but not the Territories.

(14) *You* means the person submitting the prior notice, *i.e.*, the submitter, or the person transmitting prior notice information on behalf of the submitter, *i.e.*, the transmitter.

§ 1.277 What is the scope of this subpart?

(a) This subpart applies to all food for humans and other animals that is imported or offered for import into the United States for use, storage, or distribution in the United States, including food for gifts and trade and quality assurance/quality control samples, food for transshipment through the United States to another country, food for future export, and food for use in a U.S. Foreign Trade Zone.

(b) Notwithstanding paragraph (a), this subpart does not apply to:

(1) Food for an individual's personal use when it is carried by or otherwise accompanies the individual when arriving in the United States;

(2) Food that was made by an individual in his/her personal residence and sent by that individual as a personal gift (*i.e.*, for non-business reasons) to an individual in the United States;

(3) Food that is imported then exported without leaving the port of arrival until export;

(4) Meat food products that at the time of importation are subject to the exclusive jurisdiction of the U.S. Department of Agriculture (USDA) under the Federal Meat Inspection Act (21 U.S.C. 601 *et seq.*);

(5) Poultry products that at the time of importation are subject to the exclusive jurisdiction of USDA under the Poultry Products Inspection Act (21 U.S.C. 451 *et seq.*); and

(6) Egg products that at the time of importation are subject to the exclusive jurisdiction of USDA under the Egg Products Inspection Act (21 U.S.C. 1031 *et seq.*).

Requirements To Submit Prior Notice of Imported Food

§ 1.278 Who is authorized to submit prior notice?

A prior notice for an article of food may be submitted by any person with knowledge of the required information. This person is the submitter. The submitter also may use another person to transmit the required information on his/her behalf. The person who transmits the information is the transmitter. The submitter and transmitter may be the same person.

§ 1.279 When must prior notice be submitted to FDA?

(a) Except as provided in paragraph (c) of this section, you must submit the prior notice to FDA and the prior notice submission must be confirmed by FDA for review as follows:

(1) If the article of food is arriving by land by road, no less than 2 hours before arriving at the port of arrival;

(2) If the article of food is arriving by land by rail, no less than 4 hours before arriving at the port of arrival;

(3) If the article of food is arriving by air, no less than 4 hours before arriving at the port of arrival; or

(4) If the article of food is arriving by water, no less than 8 hours before arriving at the port of arrival.

(b) Except in the case of an article of food imported or offered for import by international mail, you may not submit prior notice more than 5 calendar days before the anticipated date of arrival of the food at the anticipated port of arrival.

(c) Notwithstanding paragraphs (a) and (b) of this section, if the article of food is arriving by international mail, you must submit the prior notice before the article of food is sent to the United States.

(d) FDA will notify you that your prior notice has been confirmed for review with a reply message that contains a Prior Notice (PN) Confirmation Number. Your prior notice will be considered submitted and the prior notice time will start when FDA has confirmed your prior notice for review.

(e) The PN Confirmation Number must accompany any article of food

arriving by international mail. The PN Confirmation Number must appear on the Customs Declaration that accompanies the package.

(f) A copy of the confirmation including the PN Confirmation Number, must accompany any article of food that is subject to this subpart when it is carried by or otherwise accompanies an individual when arriving in the United States. The copy of the confirmation must be provided to CBP or FDA upon arrival.

(g) The PN Confirmation Number must accompany any article of food for which the prior notice was submitted through the FDA Prior Notice System Interface (FDA PN System Interface) when the article arrives in the United States and must be provided to CBP or FDA upon arrival.

§ 1.280 How must you submit prior notice?

(a) You must submit the prior notice electronically to FDA. You must submit all prior notice information in the English language, except that an individual's name, the name of a company, and the name of a street may be submitted in a foreign language. All information, including these items, must be submitted using the Latin (Roman) alphabet. Unless paragraph (d) of this section applies, you must submit prior notice through:

(1) The CBP Automated Broker Interface of the Automated Commercial System (ABI/ACS); or

(2) The FDA PN System Interface at *http://www.access.fda.gov*. You must submit prior notice through the FDA PN System Interface for articles of food imported or offered for import by international mail, other transaction types that cannot be made through ABI/ACS, and articles of food that have been refused under section 801(m)(1) of the act and this subpart.

(b) If a custom broker's or self-filer's system is not working or if the ABI/ACS interface is not working, prior notice must be submitted through the FDA PN System Interface.

(c) If FDA determines that FDA PN System Interface is not working, FDA will issue notification at *http://www.access.fda.gov* and FDA Web site at *http://www.fda.gov* —see Prior Notice. Once FDA issues this notification, if you intended to use the FDA PN System Interface to submit a prior notice, you must submit prior notice information by e-mail or by fax to FDA. The location for receipt of submission by e-mail or fax is listed at *http://www.fda.gov*—see Prior Notice—PN System Interface.

(d) If FDA determines that the Operational and Administration System for Import Support (OASIS) is not working, FDA will issue notification at *http://www.access.fda.gov*, on the FDA Web site at *http://www.fda.gov*, and through messages in ABI/ACS. Once FDA issues this notification, all prior notices must be submitted to FDA by e-mail or by fax. The location for receipt of submission by e-mail or fax is listed at *http://www.fda.gov*—see Prior Notice.

(e) Prior notice information will only be accepted at the listed e-mail or fax locations if FDA determines that the FDA PN System Interface or OASIS is not working.

§ 1.281 What information must be in a prior notice?

(a) *General.* For each article of food that is imported or offered for import into the United States, except by international mail, you must submit the information for the article that is required in this paragraph.

(1) The name of the individual submitting the prior notice and his/her business address, and phone number, fax number, and e-mail address, and the name and address of the submitting firm, if applicable. If a registration number is provided, city and country may be provided instead of the full address;

(2) If different from the submitter, the name of the individual and firm, if applicable, transmitting the prior notice on behalf of the submitter and his/her business address, and phone number, fax number, and e-mail address. If a registration number is provided, city and country may be provided instead of the full address;

(3) The entry type;

(4) The CBP entry identifier (*e.g.*, CBP entry number or in-bond number), if available;

(5) The identity of the article of food being imported or offered for import, as follows:

(i) The complete FDA product code;

(ii) The common or usual name or market name;

(iii) The estimated quantity of food that will be shipped, described from largest container to smallest package size; and

(iv) The lot or code numbers or other identifier of the food if required by the act or FDA regulations, *e.g.*, low acid canned foods, by 21 CFR 113.60(c); acidified foods, by 21 CFR 114.80(b); and infant formula, by 21 CFR 106.90;

(6) For an article of food that is no longer in its natural state, the name and address of the manufacturer and the registration number assigned to the facility that is associated with the article of food. A registration number is not required for a facility associated with an article of food if the article is imported or offered for import for transshipment, storage, and export, or further manipulation and export. If the article of food is sent by an individual as a personal gift (*i.e.*, for nonbusiness reasons) to an individual in the United States, you may provide the name and address of the firm that appears on the label under 21 CFR 101.5 instead of the name, address, and registration number of the manufacturer. If a registration number is provided, city and country may be provided instead of the full address;

(7) For an article of food that is in its natural state, the name and growing location address of the grower, if known. If the submitter does not know the identity of the grower or, if the article has been consolidated, the identity of any of the growers, you may provide the name and address of the firm that has consolidated the articles of food from different growers or different growing locations;

(8) The FDA Country of Production;

(9) The name and address of the shipper and, if the shipper is required to register under 21 CFR part 1, subpart H, the registration number assigned to the shipper's facility that is associated with the article of food. A registration number is not required for a facility associated with an article of food if the article is imported or offered for import for transshipment, storage, and export, or further manipulation and export. If a registration number is provided, city and country may be provided instead of the full address;

(10) The country from which the article is shipped;

(11) Anticipated arrival information about the article of food being imported or offered for import, as follows:

(i) The anticipated port of arrival and, if the anticipated port of arrival has more than one border crossing, the specific anticipated border crossing where the food will be brought into the United States;

(ii) The anticipated date on which the article of food will arrive at the anticipated port of arrival; and

(iii) The anticipated time of that arrival;

(12) The name and address of the importer. If a registration number is provided, city and country may be provided instead of the full address. The identity of the owner is not required for an article of food that is imported or offered for import for transshipment through the United States under a Transportation and Exportation entry;

(13) The name and address of the owner if different from the importer or ultimate consignee. If a registration

number is provided, city and country may be provided instead of the full address. The identity of the importer is not required for an article of food that is imported or offered for import for transshipment through the United States under a Transportation and Exportation entry;

(14) The name and address of the ultimate consignee. If a registration number is provided, city and country may be provided instead of the full address. The identity of the ultimate consignee is not required for an article of food that is imported or offered for import for transshipment through the United States under a Transportation and Exportation entry;

(15) The mode of transportation;

(16) The Standard Carrier Abbreviation Code (SCAC) or International Air Transportation Association (IATA) code of the carrier which is, or will be, carrying the article of food from the country from which the article is shipped to the United States, or if codes are not applicable, then the name and country of the carrier;

(17) Planned shipment information, as applicable:

(i) The Airway Bill number(s) or Bill of Lading number(s). This information is not required for an article of food when carried by or otherwise accompanying an individual when entering the United States;

(ii) For food arriving by ocean vessel, the vessel name and voyage number;

(iii) For food arriving by air carrier, the flight number;

(iv) For food arriving by truck, bus, or rail, the trip number;

(v) For food arriving as containerized cargo by water, air, or land, the container number(s). This information is not required for an article of food when carried by or otherwise accompanying an individual when entering the United States;

(vi) For food arriving by rail, the car number. This information is not required for an article of food when carried by or otherwise accompanying an individual;

(vii) For food arriving by privately owned vehicle, the license plate number and State or province; and

(viii) The 6-digit Harmonized Tariff Schedule (HTS) code.

(b) Articles arriving by international mail. For each article of food that is imported or offered for import into the United States by international mail, you must submit the information for the article that is required in this paragraph.

(1) The name of the individual submitting the prior notice and his/her business address, and phone number, fax number, and e-mail address, and the name and address of the submitting firm, if applicable. If a registration number is provided, city and country may be provided instead of the full address;

(2) If different from the submitter, the name of the individual and firm, if applicable, transmitting the prior notice on behalf of the submitter and his/her business address and phone number, fax number, and e-mail address. If a registration number is provided, city and country may be provided instead of the full address;

(3) The entry type (which will be a mail entry);

(4) The identity of the article of food being imported or offered for import, as follows:

(i) The complete FDA product code;

(ii) The common or usual name or market name;

(iii) The estimated quantity of food that will be shipped, described from largest container to smallest package size; and

(iv) The lot or code numbers or other identifier of the food if required by the act or FDA regulations, *e.g.*, low acid canned foods, by 21 CFR 113.60(c); acidified foods, by 21 CFR 114.80(b); and infant formula, 21 CFR 106.90;

(5) For an article of food that is no longer in its natural state, the name and address of the manufacturer and the registration number assigned to the facility that is associated with the article of food. A registration number is not required for a facility associated with an article of food if the article is imported or offered for import for transshipment, storage and export, or further manipulation and export. If the article of food is sent by an individual as a personal gift (*i.e.*, for non-business reasons) to an individual in the United States, you may provide the name and address of the firm that appears on the label under 21 CFR 101.5 instead of the name, address, and registration number of the manufacturer. If a registration number is provided, city and country may be provided instead of the full address;

(6) For an article of food that is in its natural state, the name and growing location address of the grower, if known. If the submitter does not know the identity of the grower or, if the article has been consolidated, the identity of any of the growers, you may provide the name and address of the firm that has consolidated the articles of food from different growers or different growing locations;

(7) The FDA Country of Production;

(8) The name and address of the shipper and, if the shipper is required to register under 21 CFR part 1, subpart H, the registration number assigned to the shipper's facility that is associated with the article of food. A registration number is not required for a facility associated with an article of food if the article is imported or offered for import for transshipment, storage and export, or further manipulation and export. If a registration number is provided, city and country may be provided instead of the full address;

(9) The country from which the article is shipped (*i.e.*, mailed);

(10) The anticipated date of mailing; and

(11) The name and address of the U.S. recipient.

(c) *Refused articles.* If the article of food has been refused under section 801(m)(1) of the act and this subpart, you must submit the information for the article that is required in this paragraph. However, if the refusal is based on § 1.283(a)(1)(iii) (Untimely Prior Notice), you do not have to re-submit any information previously submitted unless it has changed or the article has been exported and the original prior notice was submitted through ABI/ACS. If the refusal is based on § 1.283(a)(ii), you should cancel the previous submission per § 1.282(b) and (c).

(1) The name of the individual submitting the prior notice and his/her business address, and phone number, fax number, and e-mail address, and the name and address of the submitting firm, if applicable. If a registration number is provided, city and country may be provided instead of the full address;

(2) If different from the submitter, the name of the individual and firm, if applicable, transmitting the prior notice on behalf of the submitter and his/her business address, and phone number, fax number, and e-mail address. If the registration number is provided, city and country may be provided instead of the full address;

(3) The entry type;

(4) The CBP entry identifier (*e.g.*, CBP entry number or in-bond number), if available;

(5) The identity of the article of food being imported or offered for import, as follows:

(i) The complete FDA product code;

(ii) The common or usual name or market name;

(iii) The quantity of food that was shipped, described from largest container to smallest package size; and

(iv) The lot or code numbers or other identifier of the food if required by the act or FDA regulations, *e.g.*, low acid canned foods, by 21 CFR 113.60(c); acidified foods, by 21 CFR 114.80(b); and infant formula, by 21 CFR 106.90;

(6) For an article of food that is no longer in its natural state, the name and address of the manufacturer and the registration number assigned to the facility that is associated with the article of food. A registration number is not required for a facility associated with an article of food if the article is imported or offered for import for transshipment, storage and export, or further manipulation and export. If the article of food is sent by an individual as a personal gift (*i.e.*, for non-business reasons) to an individual in the United States, you may provide the name and address of the firm that appears on the label under 21 CFR 101.5 instead of the name, address, and registration number of the manufacturer. If a registration number is provided, city and country may be provided instead of the full address;

(7) For an article of food that is in its natural state, the name and growing location address of the grower, if known. If the submitter does not know the identity of the grower or, if the article has been consolidated, any of the growers, you may provide the name and address of the firm that has consolidated the articles of food from different growers or different growing locations;

(8) The FDA Country of Production;

(9) The name and address of the shipper and, if the shipper is required to register under 21 CFR part 1, subpart H, the registration number assigned to the shipper's facility that is associated with the article of food. A registration number is not required for a facility associated with an article of food if the article is imported or offered for import for transshipment, storage and export, or further manipulation and export. If a registration number is provided, city and country may be provided instead of the full address;

(10) The country from which the article is shipped;

(11) The port of arrival;

(12) The name and address of the importer. If a registration number is provided, city and country may be provided instead of the full address. The identity of the importer is not required for an article of food that is imported or offered for import for transshipment through the United States under a Transportation and Exportation entry;

(13) The name and address of the owner, if different from the owner or ultimate consignee. If a registration number is provided, city and country may be provided instead of the full address. The identity of the owner is not required for an article of food that is imported or offered for import for transshipment through the United States under a Transportation and Exportation entry;

(14) The name and address of the ultimate consignee. If a registration number is provided, city and country may be provided instead of the full address. The identity of the ultimate consignee is not required for an article of food that is imported or offered for import for transshipment through the United States under a Transportation and Exportation entry;

(15) The mode of transportation;

(16) The Standard Carrier Abbreviation Code (SCAC) or International Air Transportation Association (IATA) code of the carrier which carried the article of food from the country from which the article is shipped to the United States, or if codes are not applicable, then the name and country of the carrier;

(17) Shipment information, as applicable:

(i) The Airway Bill number(s) or Bill of Lading number(s); however, this information is not required for an article of food when carried by or otherwise accompanying an individual when entering the United States;

(ii) For food that arrived by ocean vessel, the vessel name and voyage number;

(iii) For food that arrived by air carrier, the flight number;

(iv) For food that arrived by truck, bus, or rail, the trip number;

(v) For food that arrived as containerized cargo by water, air, or land, the container number(s); however, this information is not required for an article of food when carried by or otherwise accompanying an individual when entering the United States;

(vi) For food that arrived by rail, the car number; however, this information is not required for an article of food when carried by or otherwise accompanying an individual;

(vii) For food that arrived by privately owned vehicle, the license plate number and State or province;

(viii) The 6-digit HTS code; and

(18) The location and address where the article of refused food will be or is being held, the date the article has arrived or will arrive at that location, and identification of a contact at that location.

§ 1.282 What must you do if information changes after you have received confirmation of a prior notice from FDA?

(a)(1) If any of the information required in § 1.281(a) except the information required in:

(i) § 1.281(a)(5)(iii) (quantity),

(ii) § 1.281(a)(11) (anticipated arrival information), or

(iii) § 1.281(a)(17) (planned shipment information) changes after you receive notice that FDA has confirmed your prior notice submission for review, you must resubmit prior notice in accordance with this subpart unless the article of food will not be offered for import or imported into the United States.

(2) If any of the information required in § 1.281(b), except the information required in § 1.281(b)(10) (the anticipated date of mailing), changes after you receive notice that FDA has confirmed your prior notice submission for review, you must resubmit prior notice in accordance with this subpart, unless the article of food will not be offered for import or imported into the United States.

(b) If you submitted the prior notice via the FDA PN System Interface, you should cancel the prior notice via the FDA PN System Interface.

(c) If you submitted the prior notice via ABI/ACS, you should cancel the prior notice via ACS by requesting that CBP delete the entry.

Consequences

§ 1.283 What happens to food that is imported or offered for import without adequate prior notice?

(a) For each article of food that is imported or offered for import into the United States, except for food arriving by international mail or food carried by or otherwise accompanying an individual, the consequences are:

(1) *Inadequate prior notice*—(i) *No prior notice.* If an article of food arrives at the port of arrival and no prior notice has been submitted and confirmed by FDA for review, the food is subject to refusal of admission under section 801(m)(1) of the act (21 U.S.C. 381(m)(1)). If an article of food is refused for lack of prior notice, unless CBP concurrence is obtained for export and the article is immediately exported from the port of arrival under CBP supervision, it must be held within the port of entry for the article unless directed by CBP or FDA.

(ii) *Inaccurate prior notice.* If prior notice has been submitted and confirmed by FDA for review, but upon review of the notice or examination of the article of food, the notice is determined to be inaccurate, the food is subject to refusal of admission under section 801(m)(1) of the act (21 U.S.C. 381(m)(1)). If the article of food is refused due to inaccurate prior notice, unless CBP concurrence is obtained for export and the article is immediately exported from the port of arrival under CBP supervision, it must be held within

the port entry for the article unless directed by CBP or FDA.

(iii) *Untimely prior notice.* If prior notice has been submitted and confirmed by FDA for review, but the full time that applies under § 1.279 of this subpart for prior notice has not elapsed when the article of food arrives, the food is subject to refusal of admission under section 801(m)(1) of the act (21 U.S.C. 381(m)(1)), unless FDA has already reviewed the prior notice, determined its response to the prior notice, and advised CBP of that response. If the article of food is refused due to untimely prior notice, unless CBP concurrence is obtained for export and the article is immediately exported from the port of arrival under CBP supervision, it must be held within the port of entry for the article unless directed by CBP or FDA.

(2) *Status and movement of refused food.* (i) An article of food that has been refused under section 801(m)(1) of the act and paragraph (a) of this section shall be considered general order merchandise as described in section 490 of the Tariff Act of 1930, as amended, 19 U.S.C. 1490.

(ii) Refused food must be moved under appropriate custodial bond. FDA must be notified of the location where the food has been or will be moved, within 24 hours of refusal. The refused food shall not be entered and shall not be delivered to any importer, owner, or ultimate consignee. The food must be taken directly to the designated location.

(3) *Segregation of refused foods.* If an article of food that is refused is part of a shipment that contains articles of food that have not been placed underhold, the refused article of food may be segregated from the rest of the shipment. This segregation must take place within the port, of arrival or where the article is held, if different. FDA or CBP may supervise segregation. If FDA or CBP determines that supervision is necessary, segregation must not take place without supervision.

(4) *Costs.* Neither FDA nor CBP are liable for transportation, storage, or other expenses resulting from refusal.

(5) *Export after refusal.* An article of food that has been refused under § 1.283(a) may be exported with CBP concurrence and under CBP supervision unless it is seized or administratively detained by FDA or CBP under other authority. If an article of food that has been refused admission under § 1.283(a) is exported, the prior notice should be cancelled within 5 business days of exportation.

(6) *No post-refusal submission or request for review.* If an article of food is refused under section 801(m)(1) and no prior notice is submitted or resubmitted, no request for FDA review is submitted in a timely fashion, or export has not occurred in accordance with paragraph (a)(7) of this section, the article of food shall be dealt with as set forth in CBP regulations relating to general order merchandise (19 CFR part 127), except that the article may only be sold for export or destroyed as agreed to by CBP and FDA.

(b) *Food carried by or otherwise accompanying an individual.* If food carried by or otherwise accompanying an individual arriving in the United States is not for personal use and does not have adequate prior notice or the individual cannot provide FDA or CBP with a copy of the PN confirmation, the food is subject to refusal of admission under section 801(m)(1) of the act. If before leaving the port, the individual arrange to have the food held at the port or exported, the article of food shall be destroyed.

(c) Post-Refusal Prior Notice Submissions.

(1) If an article of food is refused under § 1.283(a)(1)(i) (no prior notice) and the food is not exported, prior notice must be submitted in accordance with §§ 1.280 and 1.281(c) of this subpart.

(2) If an article of food is refused under § 1.283(a)(1)(ii) (inaccurate prior notice) and the food is not exported, you should cancel the prior notice in accordance with § 1.282 and must resubmit prior notice in accordance with §§ 1.280 and 1.281(c).

(3) Once the prior notice has been submitted or resubmitted and confirmed by FDA for review, FDA will endeavor to review and respond to the prior notice submission within the timeframes set out in § 1.279.

(d) FDA Review After Refusal.

(1) If an article of food has been refused admission under section 801(m)(1) of the act, a request may be submitted asking FDA to review whether the article is subject to the requirements of this subpart under § 1.276(b)(4) or § 1.277, or whether the information submitted in a prior notice is accurate. A request for review may not be used to submit prior notice or to resubmit an inaccurate prior notice.

(2) A request may be submitted only by the submitter, importer, owner, or ultimate consignee. A request must identify which one the requester is.

(3) A request must be submitted in writing to FDA and delivered by mail, express courier, fax, or e-mail. The location for receipt of a request is listed at *http://www.fda.gov*—see Prior Notice. A request must include all factual and legal information necessary for FDA to conduct its review. Only one request for review may be submitted for each refused article.

(4) The request must be submitted within 5 calendar days of the refusal. FDA will review and respond within 5 calendar days of receiving the request.

(5) If FDA determines that the article is not subject to the requirements of this subpart under § 1.276(b)(5) or § 1.277 or that the prior notice submission is accurate, it will notify the requester, the transmitter, and CBP that the food is no longer subject to refusal under section 801(m)(1) of the act.

(e) International Mail. If an article of food arrives by international mail with inadequate prior notice or the PN confirmation number is not affixed as required, the parcel will be held by CBP for 72 hours for FDA inspection and disposition. If FDA refuses the article under section 801(m) of the act and there is a return address, the parcel may be returned to sender stamped ''No Prior Notice—FDA Refused.'' If the article is refused and there is no return address or FDA determines that the article of food in the parcel appears to present a hazard, FDA may dispose of or destroy the parcel at its expense. If FDA does not respond within 72 hours of the CBP hold, CBP may return the parcel to the sender or, if there is no return address, destroy the parcel, at FDA expense.

(f) *Prohibitions on delivery and transfer.*

(1) Notwithstanding section 801(b) of the act, an article of food refused under section 801(m)(1) of the act may not be delivered to the importer, owner, or ultimate consignee until prior notice is submitted to FDA in accordance with this subpart, FDA has examined the prior notice, FDA has determined that the prior notice is adequate, and FDA has notified CBP and the transmitter that the article of food is no longer refused admission under section 801(m)(1).

(2) During the time an article of food that has been refused under section 801(m)(1) of the act is held, the article may not be transferred by any person from the port or the secure facility until prior notice is submitted to FDA in accordance with this subpart, FDA has examined the prior notice, FDA has determined that the prior notice is adequate, and FDA has notified CBP and the transmitter that the article of food no longer is refused admission under section 801(m)(1). After this notification by FDA to CBP and transmitter, entry may be made in accordance with law and regulation.

(g) *Relationship to other admissibility decisions.* A determination that an

article of food is no longer refused under section 801(m)(1) of the act is different than, and may come before, determinations of admissibility under other provisions of the act or other U.S. laws. A determination that an article of food is no longer refused under section 801(m)(1) does not mean that it will be granted admission under other provisions of the act or other U.S. laws.

§ 1.284 What are the other consequences of failing to submit adequate prior notice or otherwise failing to comply with this subpart?

(a) The importing or offering for import into the United States of an article of food in violation of the requirements of section 801(m), including the requirements of this subpart, is a prohibited act under section 301(ee) of the act (21 U.S.C. 331(ee)).

(b) Section 301 of the act (21 U.S.C. 331) prohibits the doing of certain acts or causing such acts to be done.

(1) Under section 302 of the act (21 U.S.C. 332), the United States can bring a civil action in federal court to enjoin persons who commit a prohibited act.

(2) Under section 303 of the act (21 U.S.C. 333), the United States can bring a criminal action in Federal court to prosecute persons who are responsible for the commission of a prohibited act.

(c) Under section 306 of the act (21 U.S.C. 335a), FDA can seek debarment of any person who has been convicted of a felony relating to importation of food into the United States or any person who has engaged in a pattern of importing or offering adulterated food that presents a threat of serious adverse health consequences or death to humans or animals.

§ 1.285 What happens to food that is imported or offered for import from unregistered facilities that are required to register under 21 CFR part 1, subpart H?

(a) If an article of food from a foreign manufacturer that is not registered as required under section 415 of the act (21 U.S.C. 350d) and subpart H is imported or offered for import into the United States, the food is subject to refusal of admission under section 801(m)(1) of the act and § 1.283 for failure to provide adequate prior notice. The failure to provide the correct registration number of the foreign manufacturer, if registration is required under section 415 of the act and 21 CFR part 1, subpart H, renders the identity of that facility incomplete for purposes of prior notice.

(b) Unless CBP concurrence is obtained for export and the article is immediately exported from the port of arrival, if an article of food is imported or offered for import from a foreign facility that is not registered as required under section 415 of the act and is placed under hold, it must be held within the port of entry for the article unless directed by CBP or FDA.

(c) *Status and movement of held food.* (1) An article of food that has been placed under hold under section 801(l) of the act shall be considered general order merchandise as described in section 490 of the Tariff Act of 1930, as amended (19 U.S.C. 1490).

(2) Food under hold under section 801(l) must be moved under appropriate custodial bond. FDA must be notified of the location where the food has been or will be moved, within 24 hours of the hold. The food subject to hold shall not be entered and shall not be delivered to any importer, owner, or ultimate consignee. The food must be taken directly to the designated facility.

(d) *Segregation of refused foods.* If an article of food that has been placed under hold under section 801(l) is part of a shipment that contains articles that have not been placed under hold of the act, the food under hold may be segregated from the rest of the shipment. This segregation must take place within the port of arrival where the article is held, if different. FDA or CBP may supervise segregation. If FDA or CBP determine that supervision is necessary, segregation must not take place without supervision.

(e) *Costs.* Neither FDA nor CBP will be liable for transportation, storage, or other expenses resulting from any hold.

(f) *Export after refusal.* An article of food that has been placed under hold under section 801(l) of the act may be exported with CBP concurrence and under CBP supervision unless it is seized or administratively detained by FDA or CBP under other authority.

(g) *No Registration or Request for Review.* If an article of food is placed under hold under section 801(l) of the act and no registration or request for FDA review is submitted in a timely fashion or export has not occurred in accordance with subsection (g), the food shall be dealt with as set forth in CBP regulations relating to general order merchandise, except that the article may only be sold for export or destroyed as agreed to by CBP and FDA.

(h) *Food carried by or otherwise accompanying an individual.* If an article of food carried by or otherwise accompanying an individual arriving in the United States is placed under hold under section 801(l) of the act because it is from a foreign facility that is not registered as required under section 415 of the act, 21 U.S.C. 350d, and subpart H, the individual may arrange to have the food held at the port or exported. If such arrangements cannot be made, the article of food may be destroyed.

(i) *Post-refusal and post-hold submissions.* (1) Post-refusal. To resolve the refusal if an article of food is refused under § 1.283(a) because the facility is not registered, the facility must be registered and a registration number has been obtained, you should cancel the prior notice and must resubmit the prior notice in accordance with § 1.283(c).

(2) Post-hold. To resolve a hold, if an article of food is held under § 1.285(b) because it is from a foreign facility that is not registered, the facility must be registered and a registration number must be obtained.

(i) FDA must be notified of the applicable registration number in writing. The notification must provide the name and contact information for the person submitting the information. The notification may be delivered to FDA by mail, express courier, fax, or e-mail. The location for receipt of a notification of registration number associated with an article of food under hold is listed at *http://www.fda.gov*—see Food Facility Registration. The notification should include the applicable CBP identifier.

(ii) If FDA determines that the article is no longer subject to hold, it will notify the person who provided the registration information and CBP that the food is no longer subject to hold under section 801(l) of the act.

(j) *FDA review after hold.* (1) If an article of food has been placed under hold under section 801(l), a request may be submitted asking FDA to review whether the facility associated with the article is subject to the requirements of section 415 of the act. A request for review may not be submitted to obtain a registration number.

(2) A request may be submitted only by the prior notice submitter, importer, owner, or ultimate consignee of the article. A request must identify which one the requestor is.

(3) A request must be submitted in writing to FDA and delivered by mail, express courier, fax or e-mail. The location for receipt of a request is listed at *http://www.fda.gov*—see Prior Notice. A request must include all factual and legal information necessary for FDA to conduct its review. Only one request for review may be submitted for each article under hold.

(4) The request must be submitted within 5 calendar days of the hold. FDA will review and respond within 5 calendar days of receiving the request.

(5) If FDA determines that the article is not from a facility subject to the requirements of section 415, it will

notify the requestor and CBP that the food is no longer subject to hold under section 801(l) of the act.

(k) *International mail.* If an article of food is that arrives by international mail is from a foreign facility that is not registered as required under section 415 of the act (21 U.S.C. 350d) and subpart H, the parcel will be held by CBP for 72 hours for FDA inspection and disposition. If the article is held under section 801(1) of the act and there is a return address, the parcel may be returned to sender stamped ''No Registration—No Admission Permitted.'' If the article is under hold and there is no return address or FDA determines that the article of food is in the parcel appears to present a hazard, FDA may dispose of or destroy the parcel at its expense. If FDA does not respond within 72 hours of the CBP hold, CBP may return the parcel to the sender stamped ''No Registration—No Admission Permitted'' or, if there is no return address, destroy the parcel, at FDA expense.

(l) *Prohibitions on delivery and transfer.* (1) Notwithstanding section 801(b) of the act (21 U.S.C. 381(b)), an article of food that has been refused under section 801(m)(1) of the act may not be delivered to the importer, owner, or ultimate consignee until prior notice is submitted to FDA in accordance with this subpart, FDA has examined the prior notice, FDA has determined that the prior notice is adequate, and FDA has notified CBP and the transmitter that the article of food is no longer refused admission under section 801(m)(1) of the act.

(2) During the time an article of food that has been refused under section 801(m)(1) of the act is held, the article may not be transferred by any person from the port or the secure facility location until prior notice is submitted to FDA in accordance with this subpart, FDA has examined the prior notice, FDA has determined that the prior notice is adequate, and FDA has notified CBP and the transmitter that the article of food is no longer refused admission under section 801(m)(1) of the act. After this notification by FDA to CBP and transmitter, entry may be made in accordance with law and regulation.

(m) *Relationship to other admissibility provisions.* A determination that an article of food is no longer subject to hold under section 801(l) of the act is different than, and may come before, determinations of admissibility under other provisions of the act or other U.S. laws. A determination that an article of food is no longer under hold under section 801(l) does not mean that it will be granted admission under other provisions of the act or other U.S. laws.

Dated: October 2, 2003.

Tommy G. Thompson,

Secretary of Health and Human Services.

Dated: October 8, 2003.

Tom Ridge,

Secretary of Homeland Security.

[FR Doc. 03–25877 Filed 10–9–03; 8:45 am]

BILLING CODE 4160–01–P

DEPARTMENT OF HEALTH AND HUMAN SERVICES

Food and Drug Administration

[Docket No. 2003N–0467]

Risk Assessment for Food Terrorism and Other Food Safety Concerns; Availability

AGENCY: Food and Drug Administration, HHS.

ACTION: Notice.

SUMMARY: The Food and Drug Administration (FDA) is announcing the availability of a risk assessment for food terrorism and other food safety concerns. FDA is making this document available to promote transparency by communicating publicly the risk to public health of acts of food terrorism, as well as incidents of unintentional contamination of food that result in significant foodborne illness. The development of this risk assessment is one of a number of steps the agency is taking to improve its ability to prevent, prepare for, and respond to an incident of food sabotage.

ADDRESSES: Submit written requests for single copies of the risk assessment to the Office of Regulations and Policy (HFS–24), Center for Food Safety and Applied Nutrition, Food and Drug Administration, 5100 Paint Branch Pkwy., College Park, MD 20740. Send one self-addressed adhesive label to assist that office in processing your request, or include a fax number to which the document may be sent. Alternatively, you may request a copy of the document by calling 301–436–1589, or you may fax your request to 301–436–2637. *See* the **SUPPLEMENTARY INFORMATION** section for electronic access to the risk assessment.

FOR FURTHER INFORMATION CONTACT: Leslye Fraser, Associate Director for Regulations, Center for Food Safety and Applied Nutrition (HFS–4), Food and Drug Administration, 5100 Paint Branch Pkwy., College Park, MD 20740, 301–436–2378.

SUPPLEMENTARY INFORMATION:

I. Background

The events of September 11, 2001, and the subsequent anthrax incidents gave rise to concerns about unconventional terrorist attacks, including the threat of attacks on the U.S. food supply. In the aftermath of those incidents, FDA took steps to improve its ability to prevent, prepare for, and respond to incidents of food sabotage.

As part of this effort, the agency prepared various assessments of the risk of food terrorism. Most of these risk assessments were deemed to be classified. The goal of this document is to communicate publicly the risk to public health of acts of food terrorism, as well as incidents of unintentional contamination of food that result in significant foodborne illness.

II. Risk Assessment for Food Terrorism and Other Food Safety Concerns

The risk assessment presents scientific evidence and various risk scenarios, to the extent that such information is unclassified, on both deliberate and accidental contamination of that portion of the food supply regulated by FDA. Unlike traditional risk assessments, which focus on one hazard, this assessment addresses the broad range of hazards that may be introduced into food intentionally or unintentionally. In addition, the very nature of ''bioterrorism'' and the fact that it is a relatively new and evolving threat present challenges in quantitatively evaluating the associated risks. Thus, FDA has prepared a qualitative assessment that follows the generally accepted framework for risk assessments endorsed by the Codex Alimentarius Commission. This framework involves the following steps:

(1) *Hazard identification.* A review of available information on the range of possible biological and chemical agents that might be used by terrorists to deliberately contaminate food or that might be introduced inadvertently into food.

(2) *Hazard characterization.* The assessment of the potential for an act of food terrorism or other food safety emergency to cause illnesses and deaths, economic effects, and social and political implications.

(3) *Exposure assessment.* An evaluation of the likelihood that an act of food terrorism or inadvertent food contamination that results in significant foodborne illness will occur.

(4) *Risk characterization.* The integration of information on potential hazards with the exposure assessment.

The risk assessment also discusses the quality of information available for, and the uncertainties associated with, the assessment.

FDA has determined that this risk assessment, which discusses prior incidents of food contamination and available unclassified information on prior acts of food sabotage, is appropriate to the circumstances.

III. Electronic Access

The risk assessment is available electronically at *http://www.cfsan.fda.gov.*

Dated: October 7, 2003.

Jeffrey Shuren,

Assistant Commissioner for Policy.

[FR Doc. 03–25850 Filed 10–9–03; 8:45 am]

BILLING CODE 4160–01–P

Reader Aids

Federal Register

Vol. 68, No. 197

Friday, October 10, 2003

CUSTOMER SERVICE AND INFORMATION

Federal Register/Code of Federal Regulations	
General Information, indexes and other finding aids	**202–741–6000**
Laws	**741–6000**
Presidential Documents	
Executive orders and proclamations	**741–6000**
The United States Government Manual	**741–6000**
Other Services	
Electronic and on-line services (voice)	**741–6020**
Privacy Act Compilation	**741–6064**
Public Laws Update Service (numbers, dates, etc.)	**741–6043**
TTY for the deaf-and-hard-of-hearing	**741–6086**

ELECTRONIC RESEARCH

World Wide Web

Full text of the daily Federal Register, CFR and other publications is located at: **http://www.access.gpo.gov/nara**

Federal Register information and research tools, including Public Inspection List, indexes, and links to GPO Access are located at: **http://www.archives.gov/federal__register/**

E-mail

FEDREGTOC-L (Federal Register Table of Contents LISTSERV) is an open e-mail service that provides subscribers with a digital form of the Federal Register Table of Contents. The digital form of the Federal Register Table of Contents includes HTML and PDF links to the full text of each document.

To join or leave, go to **http://listserv.access.gpo.gov** and select *Online mailing list archives, FEDREGTOC-L, Join or leave the list (or change settings);* then follow the instructions.

PENS (Public Law Electronic Notification Service) is an e-mail service that notifies subscribers of recently enacted laws.

To subscribe, go to **http://listserv.gsa.gov/archives/publaws-l.html** and select *Join or leave the list* (or change settings); then follow the instructions.

FEDREGTOC-L and **PENS** are mailing lists only. We cannot respond to specific inquiries.

Reference questions. Send questions and comments about the Federal Register system to: **info@fedreg.nara.gov**

The Federal Register staff cannot interpret specific documents or regulations.

FEDERAL REGISTER PAGES AND DATE, SEPTEMBER

56521–56764 1
56765–57318 2
57319–57606 3
57607–57782 6
57783–58008 7
58009–58260 8
58261–58574 9
58575–59078 10

CFR PARTS AFFECTED DURING OCTOBER

At the end of each month, the Office of the Federal Register publishes separately a List of CFR Sections Affected (LSA), which lists parts and sections affected by documents published since the revision date of each title.

3 CFR

Proclamations:
7710 56521
7711 58251
7712 58253
7713 58255
7714 58257
7715 58259
7716 58573

Administrative Orders:
Presidential Determinations:
No. 2003–40 57319
No. 2003–41 58261

5 CFR

575 56665
890 56523
892 ..... 56523, 56525

7 CFR

301 56529
930 57321
956 57324
993 57783
1206 58552
1220 57326

Proposed Rules:
58 57382
923 58636
946 58638
1206 58556

9 CFR

1 58575
2 58575
3 58575
113 57607

Proposed Rules:
113 57638

10 CFR

Ch. 1 58792
30 57327
40 57327
70 57327
72 57785

Proposed Rules:
52 57383
72 57839

12 CFR

3 56530
204 57788
208 56530
225 56530
325 56530
559 57790
562 57790
563 57790
567 56530
702 56537
704 56537
712 56537
723 56537
742 56537

Proposed Rules:
3 56568
208 56568
225 56568
325 56568
567 56568
701 56586
708a 56589
741 56586

13 CFR

120 ..... 56553, 57960

14 CFR

23 58009
39 ..... 57337, 57339, 57343, 57346, 57609, 57611, 58263, 58265, 58268, 58271, 58273, 58578, 58581
71 ..... 57347, 58011, 58582
97 ..... 57347, 57349

Proposed Rules:
25 58042
39 ..... 56591, 56594, 56596, 56598, 56792, 56794, 56796, 56799, 56801, 57392, 57394, 57639, 58044, 58046, 58050, 58283, 58285, 58287, 58289, 58291
73 58052

15 CFR

303 56555

16 CFR

1000 57799

17 CFR

30 58583
230 57760
239 57760
270 57760
274 57760
275 56692
279 56692

Proposed Rules:
239 58226
274 58226
275 58226

19 CFR

12 58371

Proposed Rules:
191 56804

20 CFR

604 58540

21 CFR

1.....58894, 58974
20.....58894
172.....57799, 57957
347.....58273
520.....57351
522.....56765
529.....57613
1300.....57799
1301.....58587
1309.....57799
1310.....57799

Proposed Rules:

1.....56600
356.....57642

22 CFR

120.....57352

24 CFR

598.....57604
599.....57604
982.....57804

Proposed Rules:

203.....58006

25 CFR

Proposed Rules:

514.....58053

26 CFR

1.....56556

27 CFR

73.....58600

Proposed Rules:

9.....57840, 57845

29 CFR

403.....58374
408.....58374

30 CFR

935.....57352
938.....56765, 57805

Proposed Rules:

917.....57398

33 CFR

100 .....58011, 58013, 58603
110.....58015
117 .....57356, 57614, 58018
165 .....57358, 57366, 57368, 57370, 57616, 58015, 58604, 58606
334.....57624

Proposed Rules:

100.....58640
117.....58642
334.....57642

37 CFR

2.....56556
260.....57814

Proposed Rules:

201.....58054

38 CFR

Proposed Rules:

17.....56876
36.....58293

39 CFR

111.....56557, 58273
224.....56557
230.....57372
261.....56557
262.....56557
263.....56557
264.....56557
265.....56557
266.....56557
267.....56557
268.....56557

40 CFR

52 .....58019, 58276, 58608
62.....57518, 58613
63.....58172, 58615
80.....56776, 57815
81.....57820
239.....57824
258.....57824

Proposed Rules:

30.....57850
31.....57850
33.....57850
35.....57850
40.....57850
52 .....58055, 58295, 58644
60.....58838
62.....58646
70.....58055
71.....58055
80.....56805, 57851
82.....56809
131.....58758
141.....58057
142.....58057
143.....58057
228.....58295
239.....57855
258.....57855
261.....56603
300.....57855

41 CFR

101–6.....56560
101–8.....57730

42 CFR

409.....58756
411.....58756
412.....57732
413.....57732, 58756
440.....58756
483.....58756
488.....58756
489.....58756

44 CFR

65.....57625
67.....57825, 57828

Proposed Rules:

67.....57856

47 CFR

1.....58629
24.....57828
25.....58629
52.....56781
64.....56764
73.....57829

Proposed Rules:

73 .....56810, 56811, 57861

48 CFR

Ch. 1.....56668, 56689
1.....56669
2 .....56669, 56676, 56681
4 .....56669, 56676, 56679
5.....56676
6.....56676
7.....56676
8.....56688
9.....56676
10.....56676, 56681
12 .....56676, 56681, 56682
13.....56669, 56681
14.....56676
19.....56676, 56681
22.....56676
24.....56688
25 .....56676, 56681, 56684, 56685
31.....56686
32.....56669, 56682
34.....56676
35.....56676
36.....56676
52 .....56669, 56682, 56684, 56685
202.....56560, 58631
204.....58631
211.....58631
212.....58631
213.....56560
226.....56561
237.....56563
243.....58631
252 .....56560, 56561, 58631
1817.....57629

Proposed Rules:

16.....56613
39.....56613

49 CFR

171.....57629
172.....57629
173.....57629
175.....57629
176.....57629
177.....57629
178.....57629
179.....57629
1503.....58281

50 CFR

17.....56564, 57829
21.....58022
32.....57308
622.....57375
635.....56783
648.....58037, 58281
660.....57379
679 .....56788, 57381, 57634, 57636, 57837, 58037, 58038
697.....56789

Proposed Rules:

17.....57643, 57646
300.....58296
402.....58298
622.....57400
648.....56811

REMINDERS

The items in this list were editorially compiled as an aid to Federal Register users. Inclusion or exclusion from this list has no legal significance.

RULES GOING INTO EFFECT OCTOBER 10, 2003

COMMODITY FUTURES TRADING COMMISSION

Foreign futures and options transactions:

UK regulatory and self-regulatory orgranizations; published 10-10-03

ENVIRONMENTAL PROTECTION AGENCY

Air pollutants, hazardous; national emission standards:

Primary magnesium refining facilities; published 10-10-03

Air quality implementation plans; approval and promulgation; various States:

California; published 8-11-03

Florida; published 8-11-03

Missouri; published 8-11-03

New Jersey; published 8-11-03

West Virginia; published 8-11-03

JUSTICE DEPARTMENT

Drug Enforcement Administration

Records, reports, and exports of listed chemicals:

Gamma-butyrolactone; threshold establishment,; published 9-10-03

TRANSPORTATION DEPARTMENT

Federal Aviation Administration

Airworthiness directives:

Airbus; published 9-5-03

deHavilland; published 9-2-03

EXTRA Flugzeugbau GmbH; published 8-19-03

Pilatus Aircraft Ltd.; published 10-9-03

TRANSPORTATION DEPARTMENT

National Highway Traffic Safety Administration

Motor vehicle safety standards:

Hydraulic and air brake systems—

Heavy vehicle anti-lock brake system (ABS); performance requirement; published 8-11-03

TREASURY DEPARTMENT

Alcohol and Tobacco Tax and Trade Bureau

Electronic signatures; electronic submission of forms; published 10-10-03

RULES GOING INTO EFFECT OCTOBER 11, 2003

POSTAL SERVICE

Domestic Mail Manual:

Semipostal stamp; price; published 8-18-03

RULES GOING INTO EFFECT OCTOBER 12, 2003

HOMELAND SECURITY DEPARTMENT

Coast Guard

Ports and waterways safety:

Portland, OR—

Captain of Port Zone, OR; safety zoness; published 10-10-03

COMMENTS DUE NEXT WEEK

AGRICULTURE DEPARTMENT

Agricultural Marketing Service

Milk marketing orders:

Pacific Northwest et al.; comments due by 10-17-03; published 8-18-03 [FR 03-20689]

Nectarines and peaches grown in—

California; comments due by 10-14-03; published 8-15-03 [FR 03-20875]

COMMERCE DEPARTMENT

National Oceanic and Atmospheric Administration

Fishery conservation and management:

Alaska; fisheries of Exclusive Economic Zone—

Pacific cod; comments due by 10-16-03; published 10-6-03 [FR 03-25265]

Caribbean, Gulf, and South Atlantic fisheries—

Gulf of Mexico shrimp; comments due by 10-14-03; published 8-14-03 [FR 03-20681]

West Coast States and Western Pacific fisheries—

Pacific Coast groundfish; comments due by 10-17-03; published 8-18-03 [FR 03-21069]

Meetings:

New England Fishery Management Council; comments due by 10-15-03; published 8-19-03 [FR 03-21206]

ENERGY DEPARTMENT

Federal Energy Regulatory Commission

Electric rate and corporate regulation filings:

Virginia Electric & Power Co. et al.; Open for comments until further notice; published 10-1-03 [FR 03-24818]

ENVIRONMENTAL PROTECTION AGENCY

Air pollution control:

State operating permit programs—

Iowa; comments due by 10-16-03; published 9-16-03 [FR 03-23585]

State operating permits programs—

Iowa; comments due by 10-16-03; published 9-16-03 [FR 03-23584]

North Dakota; comments due by 10-17-03; published 9-17-03 [FR 03-23751]

North Dakota; comments due by 10-17-03; published 9-17-03 [FR 03-23752]

Air programs; approval and promulgation; State plans for designated facilities and pollutants:

Various States; comments due by 10-17-03; published 9-17-03 [FR 03-23749]

Air programs; approval and promulgation; State plans for designated facilities and pollutants:

Various States; comments due by 10-17-03; published 9-17-03 [FR 03-23750]

Air quality implementation plans; approval and promulgation; various States:

California; comments due by 10-16-03; published 9-16-03 [FR 03-23593]

Illinois; comments due by 10-15-03; published 9-15-03 [FR 03-23268]

Indiana; comments due by 10-16-03; published 9-16-03 [FR 03-23592]

Kansas; comments due by 10-16-03; published 9-16-03 [FR 03-23590]

Missouri; comments due by 10-16-03; published 9-16-03 [FR 03-23591]

North Carolina; comments due by 10-15-03; published 9-15-03 [FR 03-23266]

Wisconsin; comments due by 10-16-03; published 9-16-03 [FR 03-23426]

Pesticides; tolerances in food, animal feeds, and raw agricultural commodities:

Hydramethylnon; comments due by 10-14-03; published 8-13-03 [FR 03-20432]

Tralkoxydim; comments due by 10-14-03; published 8-13-03 [FR 03-20433]

Water pollution; effluent guidelines for point source categories:

Meat and poultry products processing facilities; comments due by 10-14-03; published 9-29-03 [FR 03-24770]

FEDERAL COMMUNICATIONS COMMISSION

Common carrier services:

Satellite communications—

Satellite and earth station license procedures; electronic filings requirements; comments due by 10-14-03; published 9-12-03 [FR 03-23315]

HEALTH AND HUMAN SERVICES DEPARTMENT

Centers for Medicare & Medicaid Services

Medicare:

Claims; electronic submission; comments due by 10-14-03; published 8-15-03 [FR 03-20955]

Part B drugs; payment reform; comments due by 10-14-03; published 8-20-03 [FR 03-21308]

HEALTH AND HUMAN SERVICES DEPARTMENT

Food and Drug Administration

Human drugs and biological products:

Pre- and postmarketing safety reporting requirements; comments due by 10-14-03; published 6-18-03 [FR 03-15341]

Human drugs:

External analgesic products (OTC); administrative record and tentative final monograph; comments

due by 10-15-03; published 7-17-03 [FR 03-17934]

HOMELAND SECURITY DEPARTMENT

Coast Guard

Drawbridge operations:

Louisiana; comments due by 10-17-03; published 8-18-03 [FR 03-21088]

Ports and waterways safety:

Cape Fear River Bridge, NC; security zone; comments due by 10-14-03; published 7-15-03 [FR 03-17836]

INTERIOR DEPARTMENT

Fish and Wildlife Service

Endangered and threatened species:

Critical habitat designations—

Mussels in Mobile River Basin, AL; comments due by 10-14-03; published 8-14-03 [FR 03-20729]

INTERIOR DEPARTMENT

National Park Service

Special regulations:

Yellowstone and Grant Teton National Parks and John D. Rockefeller, Jr. Memorial Parkway, WY; winter visitation and recreational use management; comments due by 10-14-03; published 8-27-03 [FR 03-21332]

JUSTICE DEPARTMENT

Alcohol, Tobacco, Firearms, and Explosives Bureau

Safe Explosives Act; implementation:

Delivery of explosive materials by common or contract carrier; comments due by 10-14-03; published 9-11-03 [FR 03-23093]

LABOR DEPARTMENT

Acquisition regulations; revision; comments due by 10-14-03; published 8-15-03 [FR 03-20095]

LABOR DEPARTMENT

Mine Safety and Health Administration

Metal and nonmetal mine safety and health:

Underground mines—

Diesel particulate matter exposure of miners; comments due by 10-14-03; published 8-14-03 [FR 03-20190]

Diesel particulate matter exposure of miners; comments due by 10-14-03; published 8-26-03 [FR 03-21886]

NATIONAL AERONAUTICS AND SPACE ADMINISTRATION

Grant and Cooperative Agreement Handbook:

NASA Center, facility, computer system, or technical information access; investigative requirements; comments due by 10-14-03; published 8-15-03 [FR 03-20921]

Photographs and illustrations in reports or publications; public acknowledgements; comments due by 10-14-03; published 8-15-03 [FR 03-20920]

NUCLEAR REGULATORY COMMISSION

Byproduct material; domestic licensing:

Portable gauges; security requirements; comments due by 10-15-03; published 8-1-03 [FR 03-19588]

PERSONNEL MANAGEMENT OFFICE

Acquisition regulations:

Federal Employees Health Benefits Program—

Large provider agreements, subcontracts, and miscellaneous changes; comments due by 10-14-03; published 8-15-03 [FR 03-20857]

SECURITIES AND EXCHANGE COMMISSION

Securities:

Depository shares evidenced by American depositary receipts; Form F-6 use; eligibility requirements; comments due by 10-17-03; published 9-17-03 [FR 03-23737]

Insider lending prohibition; foreign bank exemption; comments due by 10-17-03; published 9-17-03 [FR 03-23655]

SOCIAL SECURITY ADMINISTRATION

Social security benefits:

Federal old-age, survivors, and disability insurance—

Stepchildren; entitlement and termination requirements; comments due by 10-14-03; published 8-12-03 [FR 03-20490]

STATE DEPARTMENT

Visas; immigrant documentation:

Diversity Visa Program; diversity Immigrant status; electronic petition; comments due by 10-17-03; published 8-18-03 [FR 03-21071]

TENNESSEE VALLEY AUTHORITY

Agency information collection activities; proposals, submissions, and approvals; comments due by 10-14-03; published 8-27-03 [FR 03-21868]

TRANSPORTATION DEPARTMENT

Federal Aviation Administration

Airworthiness directives:

Boeing; comments due by 10-14-03; published 8-27-03 [FR 03-21873]

Dassault; comments due by 10-14-03; published 9-19-03 [FR 03-23937]

Learjet; comments due by 10-14-03; published 8-12-03 [FR 03-20238]

McDonnell Douglas; comments due by 10-14-03; published 8-27-03 [FR 03-21874]

Pratt & Whitney Canada; comments due by 10-14-03; published 8-14-03 [FR 03-20484]

Rolls-Royce Corp.; comments due by 10-14-03; published 8-13-03 [FR 03-20573]

VOR Federal airways; comments due by 10-14-03; published 8-28-03 [FR 03-22042]

TRANSPORTATION DEPARTMENT

Federal Motor Carrier Safety Administration

Motor carrier safety standards:

Longer combination vehicle operators; minimum training requirements and driver-instructor requirements; comments due by 10-14-03; published 8-12-03 [FR 03-20368]

Special training requirements—

Entry-level comercial motor vehicle operators; minimum training requirements; comments due by 10-14-03; published 8-15-03 [FR 03-20888]

TREASURY DEPARTMENT

Foreign Assets Control Office

Trading with the Enemy Act; implementation:

Civil penalties hearing regulations; comments due by 10-14-03; published 9-11-03 [FR 03-22969]

TREASURY DEPARTMENT

Internal Revenue Service

Employment taxes and collection of income tax at source:

Federal unemployment tax deposits; de minimis threshold; comments due by 10-15-03; published 7-17-03 [FR 03-18042]

Income taxes:

Tax-exempt bonds; remedial actions; comments due by 10-14-03; published 7-21-03 [FR 03-18327]

Tax attributes reduction due to discharge of indebtedness; cross-reference; comments due by 10-16-03; published 7-18-03 [FR 03-18146]

TREASURY DEPARTMENT

Alcohol and Tobacco Tax and Trade Bureau

Alcohol; viticultural area designations:

Dundee Hills, OR; comments due by 10-14-03; published 8-15-03 [FR 03-20914]

VETERANS AFFAIRS DEPARTMENT

Board of Veterans' Appeals:

Appeals regulations and rules of practice—

Grounds of clear and unmistakable error decisions; comments due by 10-14-03; published 9-12-03 [FR 03-23260]

LIST OF PUBLIC LAWS

This is a continuing list of public bills from the current session of Congress which have become Federal laws. It may be used in conjunction with ''P L U S'' (Public Laws Update Service) on 202–741–6043. This list is also available online at *http://www.nara.gov/fedreg/plawcurr.html*.

The text of laws is not published in the **Federal Register** but may be ordered in ''slip law'' (individual pamphlet) form from the Superintendent of Documents, U.S. Government Printing Office, Washington, DC 20402 (phone, 202–512–1808). The text will also be made available on the Internet from

GPO Access at *http://www.access.gpo.gov/nara/nara005.html*. Some laws may not yet be available.

H.R. 659/P.L. 108–91
Hospital Mortgage Insurance Act of 2003 (Oct. 3, 2003; 117 Stat. 1158)

H.R. 978/P.L. 108–92
To amend chapter 84 of title 5, United States Code, to provide that certain Federal annuity computations are adjusted by 1 percentage point relating to periods of receiving disability payments, and for other purposes. (Oct. 3, 2003; 117 Stat. 1160)

S. 111/P.L. 108–93

To direct the Secretary of the Interior to conduct a special resource study to determine the national significance of the Miami Circle site in the State of Florida as well as the suitability and feasibility of its inclusion in the National Park System as part of Biscayne National Park, and for other purposes. (Oct. 3, 2003; 117 Stat. 1161)

S. 233/P.L. 108–94
Coltsville Study Act of 2003 (Oct. 3, 2003; 117 Stat. 1163)

S. 278/P.L. 108–95
Mount Naomi Wilderness Boundary Adjustment Act (Oct. 3, 2003; 117 Stat. 1165)

Last List October 3, 2003

Public Laws Electronic Notification Service (PENS)

PENS is a free electronic mail notification service of newly enacted public laws. To subscribe, go to *http://listserv.gsa.gov/archives/publaws-l.html*

Note: This service is strictly for E-mail notification of new laws. The text of laws is not available through this service. **PENS** cannot respond to specific inquiries sent to this address.