AUTHENTICATED
U.S. GOVERNMENT
INFORMATION
GPO

Federal Register

8–27–03 Wednesday
Vol. 68 No. 166 Aug. 27, 2003

Pages 51429–51672

The **FEDERAL REGISTER** (ISSN 0097–6326) is published daily, Monday through Friday, except official holidays, by the Office of the Federal Register, National Archives and Records Administration, Washington, DC 20408, under the Federal Register Act (44 U.S.C. Ch. 15) and the regulations of the Administrative Committee of the Federal Register (1 CFR Ch. I). The Superintendent of Documents, U.S. Government Printing Office, Washington, DC 20402 is the exclusive distributor of the official edition. Periodicals postage is paid at Washington, DC.

The **FEDERAL REGISTER** provides a uniform system for making available to the public regulations and legal notices issued by Federal agencies. These include Presidential proclamations and Executive Orders, Federal agency documents having general applicability and legal effect, documents required to be published by act of Congress, and other Federal agency documents of public interest.

Documents are on file for public inspection in the Office of the Federal Register the day before they are published, unless the issuing agency requests earlier filing. For a list of documents currently on file for public inspection, see *http://www.nara.gov/fedreg.*

The seal of the National Archives and Records Administration authenticates the Federal Register as the official serial publication established under the Federal Register Act. Under 44 U.S.C. 1507, the contents of the **Federal Register** shall be judicially noticed.

The **Federal Register** is published in paper and on 24x microfiche. It is also available online at no charge as one of the databases on GPO Access, a service of the U.S. Government Printing Office.

The online edition of the **Federal Register** *www.access.gpo.gov/nara,* available through GPO Access, is issued under the authority of the Administrative Committee of the Federal Register as the official legal equivalent of the paper and microfiche editions (44 U.S.C. 4101 and 1 CFR 5.10). It is updated by 6 a.m. each day the **Federal Register** is published and includes both text and graphics from Volume 59, Number 1 (January 2, 1994) forward.

For more information about GPO Access, contact the GPO Access User Support Team, call toll free 1-888-293-6498; DC area 202-512-1530; fax at 202-512-1262; or via email at *gpoaccess@gpo.gov.* The Support Team is available between 7:00 a.m. and 5:30 p.m. Eastern Time, Monday–Friday, except official holidays.

The annual subscription price for the **Federal Register** paper edition is $699, or $764 for a combined **Federal Register, Federal Register** Index and List of CFR Sections Affected (LSA) subscription; the microfiche edition of the **Federal Register** including the **Federal Register** Index and LSA is $264. Six month subscriptions are available for one-half the annual rate. The charge for individual copies in paper form is $10.00 for each issue, or $10.00 for each group of pages as actually bound; or $2.00 for each issue in microfiche form. All prices include regular domestic postage and handling. International customers please add 40% for foreign handling. Remit check or money order, made payable to the Superintendent of Documents, or charge to your GPO Deposit Account, VISA, MasterCard, American Express, or Discover. Mail to: New Orders, Superintendent of Documents, P.O. Box 371954, Pittsburgh, PA 15250-7954; or call toll free 1-866-512-1800, DC area 202-512-1800; or go to the U.S. Government Online Bookstore site, *bookstore@gpo.gov.*

There are no restrictions on the republication of material appearing in the **Federal Register.**

How To Cite This Publication: Use the volume number and the page number. Example: 68 FR 12345.

Postmaster: Send address changes to the Superintendent of Documents, Federal Register, U.S. Government Printing Office, Washington DC 20402, along with the entire mailing label from the last issue received.

SUBSCRIPTIONS AND COPIES

PUBLIC

Subscriptions:

Paper or fiche	**202–512–1800**
Assistance with public subscriptions	**202–512–1806**

General online information **202–512–1530; 1–888–293–6498**

Single copies/back copies:

Paper or fiche	**202–512–1800**
Assistance with public single copies	**1–866–512–1800 (Toll-Free)**

FEDERAL AGENCIES

Subscriptions:

Paper or fiche	**202–741–6005**
Assistance with Federal agency subscriptions	**202–741–6005**

What's NEW!

Federal Register Table of Contents via e-mail

Subscribe to FEDREGTOC, to receive the **Federal Register** Table of Contents in your e-mail every day.

If you get the HTML version, you can click directly to any document in the issue.

To subscribe, go to **http://listserv.access.gpo.gov** and select:

Online mailing list archives
FEDREGTOC-L
Join or leave the list

Then follow the instructions.

What's NEW!

Special Values on Selected Volumes of the 2002 **Code of Federal Regulations**

Selected volumes of the 2002 Code of Federal Regulations are now available for sale by the Government Printing Office at special prices.

Go to: **http://bookstore.gpo.gov/values/cfr.html**

Printed on recycled paper.

Contents

Federal Register

Vol. 68, No. 166

Wednesday, August 27, 2003

Agricultural Marketing Service
PROPOSED RULES
Milk marketing orders:
Central, 51639–51656

Agriculture Department
See Agricultural Marketing Service

Air Force Department
NOTICES
Agency information collection activities; proposals, submissions, and approvals, 51564–51565
Patent licenses; non-exclusive, exclusive, or partially exclusive:
Aircraft missile hit survivability using infrared lamp and sacrificial support structure, 51566

Centers for Disease Control and Prevention
NOTICES
Grant and cooperative agreement awards:
University of Malawi, College of Medicine, 51580

Coast Guard
RULES
Organization, functions, and authority delegations:
Great Lakes Pilotage Director, 51499
Ports and waterways safety:
Illinois River, Morris, IL; safety zone, 51453–51454
Lake Michigan—
Chicago, IL; safety zone, 51449–51451
Grand Haven, MI; safety zone, 51451–51452
NOTICES
Meetings:
National Offshore Safety Advisory Committee, 51583–51584

Commerce Department
See Foreign-Trade Zones Board
See International Trade Administration
See National Institute of Standards and Technology
See National Oceanic and Atmospheric Administration
NOTICES
Agency information collection activities; proposals, submissions, and approvals, 51549

Consumer Product Safety Commission
NOTICES
Meetings:
Upholstered furniture flammability, 51563–51564

Defense Department
See Air Force Department
NOTICES
Federal Acquisition Regulation (FAR):
Agency information collection activities; proposals, submissions, and approvals, 51564

Education Department
NOTICES
Grants and cooperative agreements; availability, etc.:
Postsecondary education—
Business and International Education Program, 51566–51568
Meetings:
Student Financial Assistance Advisory Committee, 51568
Tribal Colleges and Universities, President's Advisory Board, 51568–51569

Energy Department
See Federal Energy Regulatory Commission
RULES
Floodplain and wetland environmental review requirements; compliance, 51429–51436
NOTICES
Environmental statements; availability, etc.:
Tucson Electric Power Co.; Sahurita-Nogales transmission line, AZ, 51569–51571

Environmental Protection Agency
RULES
Air quality implementation plans; approval and promulgation; various States; air quality planning purposes; designation of areas:
West Virginia, 51459–51465
Hazardous waste program authorizations:
New Mexico, 51484–51488
Oklahoma, 51488–51492
Pesticides; tolerances in food, animal feeds, and raw agricultural commodities:
Diflubenzuron, 51479–51484
Flumioxazin, 51465–51471
Thiamethoxam, 51471–51479
PROPOSED RULES
Air quality implementation plans; approval and promulgation; various States; air quality planning purposes; designation of areas:
West Virginia, 51544–51545
Hazardous waste program authorizations:
New Mexico, 51545
Oklahoma, 51545–51546
NOTICES
Reports and guidance documents; availability, etc.:
Tracer-Test Planning Using Efficient Hydrologic Tracer-Test Design Program, 51576–51577

Equal Employment Opportunity Commission
NOTICES
Meetings; Sunshine Act, 51577

Executive Office of the President
See Science and Technology Policy Office

Federal Accounting Standards Advisory Board
NOTICES
Meetings:
Heritage asset and stewardship land; reclassifcation from required supplementary stewardship information, 51578

Federal Aviation Administration
RULES
Airworthiness directives:
Boeing, 51439–51445

Airworthiness standards:
Special conditions—
Avions Marcel Dassault-Breguet Aviation Model Falcon 10 series airplanes, 51436–51438
PROPOSED RULES
Airworthiness directives:
Boeing, 51521–51523
McDonnell Douglas, 51518–51526
NOTICES
Meetings:
RTCA, Inc., 51633–51634
Passenger facility charges; applications, etc.:
Pittsburgh International Airport, PA, 51634

Federal Communications Commission
RULES
Common carrier services:
Satellite communications—
Satellite licensing procedures, 51499–51508
PROPOSED RULES
Common carrier services:
Satellite communications—
Satellite licensing procedures, 51546–51548
NOTICES
Grants and cooperative agreements; availability, etc.:
Rural healthcare universal service support mechanism; application deadline, 51578
Meetings:
Network Reliability and Interoperability Council, 51578–51579

Federal Energy Regulatory Commission
NOTICES
Hydroelectric applications, 51575–51576
Applications, hearings, determinations, etc.:
ANR Pipeline Co., 51571
CenterPoint Energy-Mississippi River Transmission Corp., 51571–51572
Colorado Interstate Gas Co., 51572
Columbia Gas Transmission Corp., 51572
Direct Energy Marketing Inc., 51572–51573
East Tennessee Natural Gas Co., 51573
Gulf South Pipeline Co., LP, 51573–51574
Kern River Gas Transmission Co., 51574
Southern Natural Gas Co., 51574
Transcontinental Gas Pipe Line Corp., 51574–51575

Federal Maritime Commission
NOTICES
Agreements filed, etc., 51579

Federal Railroad Administration
NOTICES
Agency information collection activities; proposals, submissions, and approvals, 51634–51635

Federal Reserve System
NOTICES
Banks and bank holding companies:
Change in bank control, 51579
Formations, acquisitions, and mergers, 51579–51580

Fish and Wildlife Service
RULES
Migratory bird hunting:
Seasons, limits, and shooting hours; establishment, etc., 51657–51672
NOTICES
Endangered and threatened species and marine mammal permit applications, 51588–51589
Environmental statements; availability, etc.:
Survival enhancement permits—
Threemile Canyon Farms, LLC, et al.; Morrow and Gilliam Counties, OR; multi-species candidate conservation agreement with assurances, 51589–51591
Marine mammal permit applications, 51591
Natural resource damage assessment plans; availability, etc.:
Grant County, NM and Graham County, AZ; Phelps, Dodge Chino, Tyrone, and Morenci mines; final preassessment screen, 51591–51592

Food and Drug Administration
RULES
Animal drugs, feeds, and related products:
Moxidectin and praziquantel gel, 51445–51446
Moxidectin gel, 51445

Foreign-Trade Zones Board
NOTICES
Applications, hearings, determinations, etc.:
Michigan
Wacker Chemical Corp.; imported coloring matter and pigments, 51549
Ohio
Northeast Ohio Trade & Economic Corsortium; reorganization and expansion, 51549–51550
Texas, 51550–51551

General Services Administration
NOTICES
Federal Acquisition Regulation (FAR):
Agency information collection activities; proposals, submissions, and approvals, 51564

Health and Human Services Department
See Centers for Disease Control and Prevention
See Food and Drug Administration
See Health Resources and Services Administration
See National Institutes of Health
See Substance Abuse and Mental Health Services Administration

Health Resources and Services Administration
RULES
Smallpox Compensation Program:
Smallpox vaccine injury table, 51492–51499

Homeland Security Department
See Coast Guard

Housing and Urban Development Department
NOTICES
Agency information collection activities; proposals, submissions, and approvals, 51584–51588
Environmental statements; availability, etc.:
Tacoma, WA; Salishan revitalization project, 51588

Interior Department
See Fish and Wildlife Service
See National Park Service
See Surface Mining Reclamation and Enforcement Office

Internal Revenue Service
RULES
Income taxes:
Eligible deferred compensation plans; deferred compensation
Correction, 51446–51447

International Trade Administration
NOTICES
Antidumping:
Cased pencils from—
China, 51551
Electrolytic manganese dioxide from—
Various countries, 51551–51557
Hot-rolled carbon steel flat products from—
India, 51557
Pressure sensitive plastic tape from—
Italy, 51557–51558

International Trade Commission
NOTICES
Import investigations:
Fresh Atlantic salmon from—
Chile, 51593
Integrated repeaters, switches, transceivers, and products containing same, 51593–51594

Justice Department
NOTICES
Pollution control; consent judgments:
Hastings, NE, 51594
Hoosac Water Quality District et al., 51594
Icicle Seafoods, Inc., 51595
Jacobs, Stephen, et al., 51595
Kaiser Aluminum Corp., 51596
Wolin-Levin, Inc., 51596–51597

National Aeronautics and Space Administration
NOTICES
Federal Acquisition Regulation (FAR):
Agency information collection activities; proposals, submissions, and approvals, 51564

National Highway Traffic Safety Administration
NOTICES
Motor vehicle safety standards:
Lamps, reflective devices, and associated equipment—
Replacement equipment; interpretations, 51635–51636

National Institute of Standards and Technology
NOTICES
Information security practices by public and private sector organizations; request for submissions for inclusion in Computer Security Resource Center, 51558–51559
Meetings:
Information Security and Privacy Advisory Board, 51559–51560

National Institutes of Health
NOTICES
Meetings:
National Cancer Institute, 51580
National Human Genome Research Institute, 51581
National Institute of Child Health and Human Development, 51582
National Institute of Dental and Craniofacial Research, 51581
National Institute of Neurological Disorders and Stroke, 51581–51582

National Oceanic and Atmospheric Administration
RULES
Endangered and threatened species:
Sea turtle conservation—
Sea turtle conservation requirements; turtle excluder devices, 51508–51515
Fishery conservation and management:
Alaska; fisheries of Exclusive Economic Zone—
Pacific Ocean perch, 51515
PROPOSED RULES
Fishery conservation and management:
West Coast States and Western Pacific fisheries—
Western Pacific Fishery Management Council; meetings, 51548
NOTICES
Committees; establishment, renewal, termination, etc.:
Atlantic Highly Migratory Species Advisory Panel and Billfish Advisory Panel; meetings, 51560–51561
Reports and guidance documents; availability, etc.:
Alaska, Atlantic and Gulf of Mexico, and Pacific marine mammal stock assessment reports, 51561–51563

National Park Service
PROPOSED RULES
Special regulations:
Yellowstone and Grand Teton National Parks and John D. Rockefeller, Jr. Memorial Parkway, WY; winter visitation and recreational use management, 51526–51544

Nuclear Regulatory Commission
PROPOSED RULES
Source material; domestic licensing:
Utah uranium mills and byproduct material disposal facilities; alternative groundwater protection standards; use, 51516–51518
NOTICES
Environmental statements; availability, etc.:
PSEG Nuclear, LLC, 51597–51598
Viacom, Inc., 51598
Applications, hearings, determinations, etc.:
Nuclear Fuel Services, Inc.; correction, 51597

Research and Special Programs Administration
NOTICES
Committees; establishment, renewal, termination, etc.:
Technical Pipeline Safety Standards Committee and Technical Hazardous Liquid Pipeline Safety Standards Committee, 51636

Science and Technology Policy Office
NOTICES
Meetings:
President's Council of Advisors on Science and Technology, 51577–51578

Securities and Exchange Commission
NOTICES
Investment Company Act of 1940:
Exemption applications—
Fidelity Commonwealth Trust et al., 51598–51602
Merrill Lynch Principal Protected Trust et al., 51602–51606
Public Utility Holding Company Act of 1935 filings, 51606–51608
Securities:
Suspension of trading—
Tamarak, Inc., 51608–51609

Self-regulatory organizations; proposed rule changes:
Municipal Securities Rulemaking Board, 51609–51613
National Association of Securities Dealers, Inc., 51613–51625
Pacific Exchange, Inc., 51625–51626

Small Business Administration
NOTICES
Applications, hearings, determinations, etc.:
Psilos Group Partners II SBIC, L.P., 51626–51627

State Department
NOTICES
Committees; establishment, renewal, termination, etc.:
Cultural Diplomacy Advisory Committee, 51627
Diversity Immigrant Visa Program; registration, 51627–51632
U.S.-Singapore Memorandum of Intent on Cooperation in Environmental Matters; cooperative projects plan of action, 51632–51633

Substance Abuse and Mental Health Services Administration
NOTICES
Agency information collection activities; proposals, submissions, and approvals, 51582–51583
Meetings:
Center for Mental Health Services National Advisory Council, 51583

Surface Mining Reclamation and Enforcement Office
RULES
Permanent program and abandoned mine land reclamation plan submissions:
Pennsylvania, 51447–51449
NOTICES
Agency information collection activities; proposals, submissions, and approvals, 51592–51593

Surface Transportation Board
NOTICES
Railroad services abandonment:
Kansas & Oklahoma Railroad, Inc., 51637

Tennessee Valley Authority
NOTICES
Agency information collection activities; proposals, submissions, and approvals, 51633

Transportation Department
See Federal Aviation Administration
See Federal Railroad Administration
See National Highway Traffic Safety Administration
See Research and Special Programs Administration
See Surface Transportation Board

Treasury Department
See Internal Revenue Service

Veterans Affairs Department
RULES
Disabilities rating schedule:
Spine, 51454–51458
NOTICES
Privacy Act:
Computer matching programs, 51637–51638

Separate Parts In This Issue

Part II
Agriculture Department, Agricultural Marketing Service, 51639–51656

Part III
Interior Department, Fish and Wildlife Service, 51657–51672

Reader Aids

Consult the Reader Aids section at the end of this issue for phone numbers, online resources, finding aids, reminders, and notice of recently enacted public laws.

To subscribe to the Federal Register Table of Contents LISTSERV electronic mailing list, go to http://listserv.access.gpo.gov and select Online mailing list archives, FEDREGTOC-L, Join or leave the list (or change settings); then follow the instructions.

CFR PARTS AFFECTED IN THIS ISSUE

A cumulative list of the parts affected this month can be found in the Reader Aids section at the end of this issue.

7 CFR

Proposed Rules:

1032 51640

10 CFR

1021 51429
1022 51429

Proposed Rules:

40 51516

14 CFR

25 51436
39 51439

Proposed Rules:

39 (3 documents) 51518, 51521, 51523

21 CFR

520 (2 documents) 51445

26 CFR

1 51446
602 51446

30 CFR

938 51447

33 CFR

165 (3 documents) 51449, 51451, 51453

36 CFR

Proposed Rules:

7 51526

38 CFR

4 51454

40 CFR

52 51459
81 51459
180 (3 documents) 51465, 51471, 51479
272 (2 documents) 51484, 51488

Proposed Rules:

52 51544
81 51544
272 (2 documents) 51545

42 CFR

102 51492

46 CFR

1 51499

47 CFR

1 51499
25 51499

Proposed Rules:

25 51546

50 CFR

20 51658
223 51508
679 51515

Proposed Rules:

660 51548

Rules and Regulations

Federal Register

Vol. 68, No. 166

Wednesday, August 27, 2003

This section of the FEDERAL REGISTER contains regulatory documents having general applicability and legal effect, most of which are keyed to and codified in the Code of Federal Regulations, which is published under 50 titles pursuant to 44 U.S.C. 1510.

The Code of Federal Regulations is sold by the Superintendent of Documents. Prices of new books are listed in the first FEDERAL REGISTER issue of each week.

DEPARTMENT OF ENERGY

10 CFR Parts 1021 and 1022

RIN 1901–AA94

Compliance With Floodplain and Wetland Environmental Review Requirements

AGENCY: Department of Energy.

ACTION: Final rule.

SUMMARY: The Department of Energy (DOE) is revising its floodplain and wetland environmental review requirements to add flexibility and remove unnecessary procedural burdens by simplifying DOE public notification procedures for proposed floodplain and wetland actions, exempting additional actions from the floodplain and wetland assessment provisions of these regulations, providing for immediate action in an emergency, expanding the existing list of sources that may be used in determining the location of floodplains and wetlands, and allowing floodplain and wetland assessments for actions proposed to be taken under the Comprehensive Environmental Response, Compensation, and Liability Act (CERCLA) to be coordinated with the CERCLA environmental review process rather than the National Environmental Policy Act (NEPA) process. DOE also is making a conforming change to its NEPA implementing regulations to allow for issuance of a floodplain statement of findings in a final environmental impact statement (EIS) or separately.

EFFECTIVE DATE: These rule changes will become effective September 26, 2003.

FOR FURTHER INFORMATION CONTACT: For information regarding DOE's regulations for compliance with floodplain and wetland environmental review requirements or this rulemaking, or for copies of the final rule, contact Carolyn M. Osborne, U.S. Department of Energy, Office of NEPA Policy and Compliance, 1000 Independence Avenue, SW., Washington, DC 20585–0119. Telephone (202) 586–4600 or leave a message at (800) 472–2756; facsimile to (202) 586–7031; e-mail to *carolyn.osborne@eh.doe.gov.* The final rule also will be available after the effective date specified above on the DOE NEPA Web at *http://tis.eh.doe.gov/nepa.*

For information on DOE's NEPA process, contact Carol M. Borgstrom, Director, Office of NEPA Policy and Compliance, at the above address and telephone numbers.

SUPPLEMENTARY INFORMATION:

I. Background

We published on November 18, 2002 (67 FR 69480), proposed revisions to our regulations entitled ''Compliance with Floodplain/Wetlands Environmental Review Requirements'' (10 CFR Part 1022), which were promulgated originally on March 7, 1979 (44 FR 12596), to implement the requirements of Executive Order (E.O.) 11988, ''Floodplain Management'' (42 FR 2951; May 24, 1977), and E.O. 11990, ''Protection of Wetlands'' (42 FR 26961; May 24, 1977). We also published in our November 18, 2002, **Federal Register** notice a proposed conforming change to our ''National Environmental Policy Act Implementing Procedures'' (10 CFR 1021.313).

Publication of the Notice of Proposed Rulemaking began a 60-day public comment period, ending January 17, 2003. Comments were received from three sources: A State, a county, and a member of the public. Copies of these comments are available for public inspection at the DOE Freedom of Information Office Reading Room, Room 1E–190, Forrestal Building, 1000 Independence Avenue, SW., Washington, DC 20585–0101, (202) 586–3142, between 9 a.m. and 4 p.m., Monday through Friday, except Federal holidays.

This document adopts the revisions proposed on November 18, 2002, with certain changes discussed below, and codifies them at 10 CFR parts 1021 and 1022. In accordance with 40 CFR 1507.3, the Council on Environmental Quality (CEQ) reviewed this notice of final rulemaking and concluded that the proposed amendment to the DOE regulations implementing NEPA is in conformance with NEPA and the CEQ regulations. The Secretary of Energy has approved this notice of final rulemaking for publication.

II. Statement of Purpose

We are revising 10 CFR part 1022 based on our experience implementing the existing requirements for over 20 years. We expect these changes to improve our ability to meet our goals for floodplain and wetland protection in a timely and cost-effective manner. We are revising 10 CFR 1021.313 to conform with 10 CFR 1022.14(c) by allowing floodplain statements of findings to be issued in a final EIS or separately.

The major revisions we are implementing will: (1) Simplify our public notification procedures for proposed floodplain and wetland actions by emphasizing local publication as opposed to publication in the **Federal Register**, (2) exempt additional actions from the floodplain and wetland assessment provisions of these regulations, (3) provide for immediate action in an emergency with documentation to follow, (4) expand the existing list of credible sources that may be used in determining the location of floodplains and wetlands, and (5) allow floodplain and wetland assessments for actions proposed to be taken under CERCLA to be coordinated with the CERCLA environmental review process rather than the NEPA process. The revisions also will make the rule easier to use by reordering sections to parallel the assessment process, clarifying requirements (such as the differences between floodplain and wetland actions and their respective assessment requirements), and simplifying the rule by deleting provisions that are no longer applicable. The revisions streamline existing procedures and add no new requirements.

III. Comments Received and DOE's Responses

We have considered and evaluated the comments received during the public comment period. A number of revisions suggested in these comments have been incorporated into the final rule. The following discussion describes the comments received, provides our response to the comments, and describes any resulting changes to the rule. We also have made editorial and stylistic revisions for clarity and consistency.

A. General Comments

In addition to a comment supporting our intent to simplify and restructure the rule, we received one comment objecting to our streamlining effort on the ground that it would make it easier to sabotage environmental protection before the public could know about potential impacts. This comment is speculative. It does not provide any example to show a potentially adverse effect from any of the proposed amendments to the regulations in 10 CFR parts 1021 and 1022. We believe the revised rule will improve our ability to meet our goals for floodplain and wetland protection. We will be able to focus our resources, and those of the public, on the types of proposed actions that our experience demonstrates are most likely to benefit from an examination of alternatives and mitigating measures and increase the efficiency of our environmental reviews (thereby, for example, allowing earlier identification of mitigation actions).

We received a comment pointing to DOE's obligation to comply with the Coastal Zone Management Act, NEPA, and applicable state laws and regulations. We recognize our legal responsibilities and note that it is the intent of the E.O.'s upon which this regulation is based, and the regulation itself, that implementation be coordinated, and when appropriate, integrated with procedures for implementing other requirements, such as those of NEPA. (*See* §§ 1022.1(b) and 1022.2(b).) We also note that this rulemaking is not a proposal to conduct any activity that would affect any coastal resource. We will comply with 10 CFR part 1022 and all other applicable requirements if we propose any such activity in the future.

B. Comments on Definitions (§ 1022.4)

Two comments requested clarification of ''effects of national concern'' as used in determining whether we are required to publish in the **Federal Register** a notice of proposed action (§ 1022.12(b)) or a floodplain statement of findings (§ 1022.14(e)). In response, we have added a definition to state that effects of national concern are those effects that because of the high quality or function of the affected resource or because of the wide geographic range of effects could create concern beyond the locale or region of the proposed action. The lack of potential effects of national concern does not excuse us from our public notification and participation responsibilities (§§ 1022.3(e), 1022.12, and 1022.14).

C. Comments on Exemptions (§ 1022.5)

One comment recommended that we define terms associated with the exemptions described in § 1022.5(d) to ''ensure that the activities contemplated by the proposed rule changes will have only minimal and temporary adverse impacts on the aquatic environment.'' We do not believe it is practical or useful to attempt to define all the activities that might fall within the rule's three exemptions. We have, however, added examples for each exemption.

The rule now states that routine maintenance activities (§ 1022.5(d)(1)) are those, such as reroofing, plumbing repair, and door and window replacement, needed to maintain and preserve existing facilities and structures for their designated purpose. We believe that the restrictive conditions stated in § 1022.5(d)(2) and § 1022.5(d)(3) help describe the types of activities that could be exempted, but also have added examples in both sections. For site characterization, environmental monitoring, or environmental research activities (§ 1022.5(d)(2)), the rule now includes the examples of sampling and surveying water and air quality, flora and fauna abundance, and soil properties. For minor modification of an existing facility or structure to improve safety or environmental conditions (§ 1022.5(d)(3)), the rule now includes the examples of upgrading lighting, heating, ventilation, and air conditioning systems; installing or improving alarm and surveillance systems; and adding environmental monitoring or control systems.

D. Comments on Public Notification and Information Dissemination (§§ 1022.12 and 1022.14)

We received one comment asking that, when providing public notification, consideration be given to the interest of state government, in addition to local interest, in a proposed action. This has been our practice and is our intent. For clarification, in this final rule, we have added the parenthetical phrase ''(*e.g.*, FEMA [Federal Emergency Management Agency, Department of Homeland Security] regional offices, host and affected states, and tribal and local governments)'' after ''government agencies'' in §§ 1022.12(b) and 1022.14(d). Distribution to these parties, and to others as appropriate for a specific proposed action, facilitates public participation.

One comment questioned whether language in § 1022.14(f) would limit distribution of floodplain statements of findings to only those state agencies identified in a particular list of state contacts maintained by the Office of Management and Budget. To clarify our intent to continue to distribute statements of findings to parties interested in or potentially affected by a proposed action, in § 1022.14(f) of the final rule, we have added the word ''also.'' The rule now states that for actions subject to E.O. 12372, ''Intergovernmental Review of Federal Programs,'' DOE ''also'' shall send the floodplain statement of findings to the state in accordance with 10 CFR part 1005 (DOE's regulations for implementing the E.O.).

With regard to a comment that DOE must establish contacts and maintain current information on them, DOE Order 451.1B, ''National Environmental Policy Act Compliance Program,'' requires each DOE Program and Field Office with NEPA responsibilities to have a Public Participation Plan. With regard specifically to state contacts, we established ongoing relationships with State Clearinghouses in 1990 through contact with the Governors, and we update our State Clearinghouse contacts in the ''Directory of Potential Stakeholders for Department of Energy Action under the National Environmental Policy Act,'' which is distributed broadly within the Department and made available on the DOE NEPA Web site (*http://tis.eh.doe.gov/nepa/guidance.html*, under ''Public Participation'').

One comment opposed our change to allow discretion in whether to include a floodplain statement of findings within a final EIS. We agree with the commenter that information relevant to potential floodplain and wetland impacts is integral to the evaluation of a proposed action and alternatives within an EIS. A final EIS would consider those impacts and mitigations. For example, both the final EIS and the floodplain assessment would evaluate mitigation measures to minimize harm to or within the floodplain. Nonetheless, a floodplain statement of findings may be issued separately as there may be times when it is not appropriate to incorporate the statement within the final EIS (*e.g.*, when steps to be taken to minimize harm are not determined until after the final EIS is issued, or a phased decision involving sequential records of decision is being made and the findings would not be relevant to the initial record of decision). Moreover, E.O. 11988, upon which the floodplain management portions of this regulation are based, does not specify when in the NEPA process the statement of findings

should be published, and E.O. 11990, which addresses wetlands protection, does not require a statement of findings. The E.O.'s allow Federal agencies substantial latitude in implementing the requirements as deemed most appropriate for individual agencies.

E. Comments on Variances (§ 1022.16)

One comment sought clarification of the conditions under which we could waive time limits between various steps in the floodplain or wetland environmental review process and requested a definition of emergency actions and emergency situations. The rule allows us to alter the floodplain or wetland assessment process in response to emergencies and in some non-emergency situations.

Section 1022.16(a) allows us to take immediate action in the event of an emergency, forgoing the assessment process required by this rule until after the emergency has been addressed. We will continue to determine what constitutes an emergency (an emergency action or emergency situation) on a case-by-case basis, as is consistent with the manner in which an emergency has been declared in the past in regard to compliance with these and other requirements (*e.g.*, NEPA). We have declared only three emergency exceptions to our NEPA procedures in the past 25 years.

Section 1022.16(b) allows shortening the review process in non-emergency situations in response to ''statutory deadlines or overriding considerations of program or project expense or effectiveness.'' This section does not allow any exception from completing a required floodplain or wetland assessment nor from following any other provision of this rule or any other applicable requirement before taking action. This provision has been in place since we first promulgated our floodplain and wetland environmental review requirements in 1979, and in practice, we have not experienced difficulty in its implementation.

The comment also asked who determines whether a variance is to be granted. The cognizant DOE official responsible for NEPA or CERCLA implementation, as applicable, normally would consult with the Office of NEPA Policy and Compliance pursuant to § 1022.16(c) before determining whether to grant a variance.

F. Other Revisions

Notable among the editorial and stylistic revisions we made are changes to the definitions of ''floodplain and wetland values'' and ''critical action floodplain'' in §1022.4. We reorganized the examples of floodplain and wetland values to improve readability.

We have added to the definition of critical action floodplain a clarification that was included in the preamble to this proposed rule in November 2002. This clarification regards when we will consider a flood with an expected frequency of less than once in a 500-year period, and thus a larger floodplain, in evaluating potential impacts associated with a critical action (*i.e.*, any DOE action for which even a slight chance of flooding would be too great). In this final rule, and as proposed, we define a critical action floodplain as ''at a minimum, the 500-year floodplain, that is, a floodplain with a 0.2 percent chance of flooding in any given year.'' To this, we have added the clarification that when another requirement applicable to the proposed action requires evaluation of a less frequent flood (*i.e.*, a more severe flood that would inundate a larger floodplain), then we may use the less frequent flood to determine the floodplain for purposes of this rule. For example, where the safety basis documentation under 10 CFR part 830 for a proposed action requires consideration of a 100,000-year flood, then the 100,000-year floodplain could be the critical action floodplain for the proposed action for purposes of this rule.

IV. Procedural Review Requirements

A. Review Under Executive Order 12866

This rule has been determined not to be a ''significant regulatory action'' under E.O. 12866, ''Regulatory Planning and Review'' (58 FR 51735; October 4, 1993), as amended by E.O. 13258 (67 FR 9385; February 28, 2002). Accordingly, today's final regulatory action was not subject to review under that E.O. by the Office of Information and Regulatory Affairs of the Office of Management and Budget.

B. Review Under Executive Order 12988

With respect to the review of existing regulations and the promulgation of new regulations, section 3(a) of E.O. 12988, ''Civil Justice Reform'' (61 FR 4779; February 7, 1996) imposes on Federal agencies the general duty to adhere to the following requirements: Eliminate drafting errors and needless ambiguity, write regulations to minimize litigation, provide a clear legal standard for affected conduct rather than a general standard, and promote simplification and burden reduction. Section 3(b) requires Federal agencies to make every reasonable effort to ensure that a regulation, among other things: Clearly specifies the preemptive effect, if any, adequately defines key terms, and addresses other important issues affecting the clarity and general draftsmanship under guidelines issued by the Attorney General. Section 3(c) of E.O. 12988 requires Executive agencies to review regulations in light of applicable standards in section 3(a) and section 3(b) to determine whether they are met or it is unreasonable to meet one or more of them. DOE has completed the required review and determined that, to the extent permitted by law, the final rule meets the relevant standards of E.O. 12988.

C. Review Under Executive Order 13132

Today's regulatory action has been determined not to be a ''policy that has federalism implications,'' that is, it does not have substantial direct effects on the states, on the relationship between the national government and the states, nor on the distribution of power and responsibility among the various levels of government under E.O. 13132, ''Federalism'' (64 FR 43255; August 10, 1999). Accordingly, no ''federalism summary impact statement'' was prepared or subjected to review under the E.O. by the Director of the Office of Management and Budget.

D. Review Under Executive Order 13175

Under E.O. 13175 (65 FR 67249; November 9, 2000) on ''Consultation and Coordination with Indian Tribal Governments,'' DOE may not issue a discretionary rule that has ''tribal implications'' and imposes substantial direct compliance costs on Indian tribal governments. DOE has determined that this rule would not have such effects and concluded that E.O. 13175 does not apply to this rule.

E. Review Under the Regulatory Flexibility Act

The revisions to the existing regulations have been reviewed under the Regulatory Flexibility Act of 1980 (5 U.S.C.601 *et seq.*) and related provisions of E.O. 13272, ''Proper Consideration of Small Entities in Agency Rulemaking'' (67 FR 53461; August 16, 2002) and DOE's procedures and policies (68 FR 7990; February 19, 2003). The Act requires preparation of an initial regulatory flexibility analysis for any regulation that is likely to have a significant economic impact on a substantial number of small entities. Today's revisions to 10 CFR parts 1021 and 1022 amend DOE policies and streamline existing procedures for environmental review of actions proposed in a floodplain or wetland under two E.O.s. The actions would

neither increase the incidence of floodplain and wetland assessments nor increase burdens associated with carrying out such an assessment. Therefore, DOE certifies that this rule will not have a significant economic impact on a substantial number of small entities, and therefore, no regulatory flexibility analysis has been prepared. We received no comments on our decision not to prepare a regulatory flexibility analysis.

F. Review Under the Paperwork Reduction Act

No additional information or recordkeeping requirements are imposed by this rulemaking. The changes would actually reduce paperwork requirements by eliminating a requirement that public notices always be published in the **Federal Register** and by increasing the number of exemptions from requirements for preparing a floodplain or wetland assessment. Accordingly, no clearance by the Office of Management and Budget was required under the Paperwork Reduction Act (44 U.S.C. 3501 *et seq.*).

G. Review Under the National Environmental Policy Act

DOE has concluded that promulgation of these revisions to existing regulations falls into a class of actions that would not individually or cumulatively have a significant impact on the human environment, as determined by DOE's regulations implementing the National Environmental Policy Act of 1969 (42 U.S.C. 4321 *et seq.*). Specifically, the revisions to 10 CFR parts 1021 and 1022 would amend DOE's policies to streamline and simplify existing procedures for environmental review of actions proposed in a floodplain or wetland under two E.O.s. The proposed regulations are covered under the categorical exclusion in paragraph A6, ''Rulemakings, Procedural'' (rulemakings that are strictly procedural) to Appendix A to subpart D, 10 CFR part 1021. Accordingly, neither an environmental assessment nor an EIS is required.

H. Review Under the Unfunded Mandates Reform Act

Title II of the Unfunded Mandates Reform Act of 1995 (Pub. L. 104–4) requires each Federal agency to prepare a written assessment of the effects of any Federal mandate in a proposed or final agency regulation that may result in the expenditure by state, tribal, or local governments, on the aggregate, or by the private sector, of $100 million in any one year. The Act also requires a Federal agency to develop an effective process to permit timely input by elected officials of state, tribal, or local governments on a proposed ''significant intergovernmental mandate,'' and requires an agency plan for giving notice and opportunity to provide timely input to potentially affected small governments before establishing any requirements that might significantly or uniquely affect small governments. DOE has determined that the revisions to 10 CFR parts 1021 and 1022 published today do not contain any Federal mandates affecting small governments, so these requirements do not apply.

I. Review Under Executive Order 13211

E.O. 13211, ''Actions Concerning Regulations That Significantly Affect Energy Supply, Distribution, or Use'' (66 FR 28355; May 22, 2001) requires Federal agencies to prepare and submit to the Office of Information and Regulatory Affairs in the Office of Management and Budget a Statement of Energy Effects for any significant energy action. Today's rule is not a significant energy action, as that term is defined in the E.O. Accordingly, DOE has not prepared a Statement of Energy Effects.

J. Review Under the Treasury and General Government Appropriations Act

Section 654 of the Treasury and General Government Appropriations Act of 1999 (Pub. L. 105–277) requires Federal agencies to issue a ''Family Policymaking Assessment'' for any proposed rule that may affect family well-being. This rule has no impact on the autonomy or integrity of the family as an institution. Accordingly, DOE has concluded that it is not necessary to prepare a Family Policymaking Assessment.

K. Review Under the Treasury and General Government Appropriations Act, 2001

The Treasury and General Government Appropriations Act, 2001 (44 U.S.C. 3516, note) provides for agencies to review most dissemination of information to the public under guidelines established by each agency pursuant to general guidelines issued by the Office of Management and Budget. The Office ofManagement and Budget guidelines were published at 67 FR 8452 (February 22, 2002), and DOE's guidelines were published at 67 FR 62446 (October 7, 2002). DOE has reviewed today's notice under the Office of Management and Budget and DOE guidelines, and has concluded that it is consistent with applicable policies in those guidelines.

L. Congressional Notification

As required by 5 U.S.C. 801, DOE will submit to Congress a report regarding the issuance of today's final rule prior to the effective date set forth at the outset of this notice. The report will state that is has been determined that the rule is not a ''major rule'' as defined by 5 U.S.C. 801(2).

List of Subjects in 10 CFR Parts 1021 and 1022

Floodplains, Wetlands.

Issued in Washington, DC, August 19, 2003.

Beverly A. Cook,

Assistant Secretary, Environment, Safety and Health.

■ For the reasons set forth in the preamble, parts 1021 and 1022 of chapter III of title 10, Code of Federal Regulations, are amended as follows:

PART 1021—NATIONAL ENVIRONMENTAL POLICY ACT IMPLEMENTING PROCEDURES

■ 1. The authority citation for part 1021 is revised to read as follows:

Authority: 42 U.S.C. 7101 *et seq.*; 42 U.S.C. 4321 *et seq.*; 50 U.S.C. 2401 *et seq.*

§ 1021.313 [Amended]

■ 2. In § 1021.313, paragraph (c), the last sentence is amended as follows:

■ a. Remove the word ''shall'' and add in its place the word ''may''.

■ b. Remove the phrase ''Floodplain/Wetlands'' and add in its place ''Floodplain and Wetland''.

■ c. Remove the period and add the words '', or a Statement of Findings may be issued separately.'' at the end of the sentence.

PART 1022—COMPLIANCE WITH FLOODPLAIN/WETLANDS ENVIRONMENTAL REVIEW REQUIREMENTS

■ 3. Part 1022 is revised to read as follows:

PART 1022—COMPLIANCE WITH FLOODPLAIN AND WETLAND ENVIRONMENTAL REVIEW REQUIREMENTS

Subpart A—General

Sec.

1022.1 Background.
1022.2 Purpose and scope.
1022.3 Policy.
1022.4 Definitions.
1022.5 Applicability.
1022.6 Public inquiries.

Subpart B—Procedures for Floodplain and Wetland Reviews

1022.11 Floodplain or wetland determination.
1022.12 Notice of proposed action.
1022.13 Floodplain or wetland assessment.
1022.14 Findings.
1022.15 Timing.
1022.16 Variances.
1022.17 Follow-up.

Subpart C—Other Requirements

1022.21 Property management.
1022.22 Requests for authorizations or appropriations.
1022.23 Applicant responsibilities.
1022.24 Interagency cooperation.

Authority: 42 U.S.C. 7101 *et seq.*; 50 U.S.C. 2401 *et seq.*; E.O. 11988, 42 FR 26951, 3 CFR, 1977 Comp., p. 117; E.O. 11990, 42 FR 26961, 3 CFR, 1977 Comp., p. 121; E.O. 12372, 47 FR 30959, 3 CFR, 1982 Comp., p. 197.

Subpart A—General

§ 1022.1 Background.

(a) Executive Order (E.O.) 11988—Floodplain Management (May 24, 1977) directs each Federal agency to issue or amend existing regulations and procedures to ensure that the potential effects of any action it may take in a floodplain are evaluated and that its planning programs and budget requests reflect consideration of flood hazards and floodplain management. Guidance for implementation of the E.O. is provided in the floodplain management guidelines of the U.S. Water Resources Council (40 FR 6030; February 10, 1978) and in ''A Unified National Program for Floodplain Management'' prepared by the Federal Interagency Floodplain Management Taskforce (Federal Emergency Management Agency, FEMA 248, June 1994). E.O. 11990—Protection of Wetlands (May 24, 1977) directs all Federal agencies to issue or amend existing procedures to ensure consideration of wetlands protection in decisionmaking and to ensure the evaluation of the potential impacts of any new construction proposed in a wetland.

(b) It is the intent of the E.O.s that Federal agencies implement both the floodplain and the wetland provisions through existing procedures such as those established to implement the National Environmental Policy Act (NEPA) of 1969 (42 U.S.C. 4321 *et seq.*). In those instances where the impacts of the proposed action are not significant enough to require the preparation of an EIS under section 102(2)(C) of NEPA, alternative floodplain or wetland evaluation procedures are to be established. As stated in the E.O.s, Federal agencies are to avoid direct or indirect support of development in a floodplain or new construction in a wetland wherever there is a practicable alternative.

§ 1022.2 Purpose and scope.

(a) This part establishes policy and procedures for discharging the Department of Energy's (DOE's) responsibilities under E.O. 11988 and E.O. 11990, including:

(1) DOE policy regarding the consideration of floodplain and wetland factors in DOE planning and decisionmaking; and

(2) DOE procedures for identifying proposed actions located in a floodplain or wetland, providing opportunity for early public review of such proposed actions, preparing floodplain or wetland assessments, and issuing statements of findings for actions in a floodplain.

(b) To the extent possible, DOE shall accommodate the requirements of E.O. 11988 and E.O. 11990 through applicable DOE NEPA procedures or, when appropriate, the environmental review process under the Comprehensive Environmental Response, Compensation, and Liability Act (CERCLA) (42 U.S.C. 9601 *et seq.*).

§ 1022.3 Policy.

DOE shall exercise leadership and take action to:

(a) Incorporate floodplain management goals and wetland protection considerations into its planning, regulatory, and decisionmaking processes, and shall to the extent practicable:

(1) Reduce the risk of flood loss;

(2) Minimize the impact of floods on human safety, health, and welfare;

(3) Restore and preserve natural and beneficial values served by floodplains;

(4) Require the construction of DOE structures and facilities to be, at a minimum, in accordance with FEMA National Flood Insurance Program building standards;

(5) Promote public awareness of flood hazards by providing conspicuous delineations of past and probable flood heights on DOE property that has suffered flood damage or is in an identified floodplain and that is used by the general public;

(6) Inform parties during transactions guaranteed, approved, regulated, or insured by DOE of the hazards associated with locating facilities and structures in a floodplain;

(7) Minimize the destruction, loss, or degradation of wetlands; and

(8) Preserve and enhance the natural and beneficial values of wetlands.

(b) Undertake a careful evaluation of the potential effects of any proposed floodplain or wetland action.

(c) Avoid to the extent possible the long- and short-term adverse impacts associated with the destruction of wetlands and the occupancy and modification of floodplains and wetlands, and avoid direct and indirect support of development in a floodplain or new construction in a wetland wherever there is a practicable alternative.

(d) Identify, evaluate, and as appropriate, implement alternative actions that may avoid or mitigate adverse floodplain or wetland impacts.

(e) Provide opportunity for early public review of any plans or proposals for floodplain or wetland actions.

§ 1022.4 Definitions.

The following definitions apply to this part:

Action means any DOE activity necessary to carry out its responsibilities for:

(1) Acquiring, managing, and disposing of Federal lands and facilities;

(2) Providing DOE-undertaken, -financed, or -assisted construction and improvements; and

(3) Conducting activities and programs affecting land use, including but not limited to water- and related land-resources planning, regulating, and licensing activities.

Base floodplain means the 100-year floodplain, that is, a floodplain with a 1.0 percent chance of flooding in any given year.

Critical action means any DOE action for which even a slight chance of flooding would be too great. Such actions may include, but are not limited to, the storage of highly volatile, toxic, or water reactive materials.

Critical action floodplain means, at a minimum, the 500-year floodplain, that is, a floodplain with a 0.2 percent chance of flooding in any given year. When another requirement directing evaluation of a less frequent flood event also is applicable to the proposed action, a flood less frequent than the 500-year flood may be appropriate for determining the floodplain for purposes of this part.

Effects of national concern means those effects that because of the high quality or function of the affected resource or because of the wide geographic range of effects could create concern beyond the locale or region of the proposed action.

Environmental assessment (EA) means a document prepared in accordance with the requirements of 40 CFR 1501.4(b), 40 CFR 1508.9, 10 CFR 1021.320, and 10 CFR 1021.321.

Environmental impact statement (EIS) means a document prepared in accordance with the requirements of section 102(2)(C) of NEPA and its

implementing regulations at 40 CFR Parts 1500–1508 and 10 CFR Part 1021.

Facility means any human-made or -placed item other than a structure.

FEMA means the Federal Emergency Management Agency, Department of Homeland Security.

Finding of no significant impact means a document prepared in accordance with the requirements of 40 CFR 1508.13 and 10 CFR 1021.322.

Flood or flooding means a temporary condition of partial or complete inundation of normally dry land areas from the overflow of inland or tidal waters, or the unusual and rapid accumulation or runoff of surface waters from any source.

Floodplain means the lowlands adjoining inland and coastal waters and relatively flat areas and floodprone areas of offshore islands.

Floodplain action means any DOE action that takes place in a floodplain, including any DOE action in a wetland that is also within the floodplain, subject to the exclusions specified at § 1022.5(c) and (d) of this part.

Floodplain and wetland values means the qualities of or functions served by floodplains and wetlands that can include, but are not limited to, living values (*e.g.*, conservation of existing flora and fauna including their long-term productivity, preservation of diversity and stability of species and habitats), cultural resource values (*e.g.*, archeological and historic sites), cultivated resource values (*e.g.*, agriculture, aquaculture, forestry), aesthetic values (*e.g.*, natural beauty), and other values related to uses in the public interest (*e.g.*, open space, scientific study, outdoor education, recreation).

Floodplain or wetland assessment means an evaluation consisting of a description of a proposed action, a discussion of its potential effects on the floodplain or wetland, and consideration of alternatives.

Floodplain statement of findings means a brief document issued pursuant to § 1022.14 of this part that describes the results of a floodplain assessment.

High-hazard areas means those portions of riverine and coastal floodplains nearest the source of flooding that are frequently flooded and where the likelihood of flood losses and adverse impacts on the natural and beneficial values served by floodplains is greatest.

Minimize means to reduce to the smallest degree practicable.

New construction, for the purpose of compliance with E.O. 11990 and this part, means the building of any structures or facilities, draining, dredging, channelizing, filling, diking, impounding, and related activities.

Notice of proposed floodplain action and notice of proposed wetland action mean a brief notice that describes a proposed floodplain or wetland action, respectively, and its location and that affords the opportunity for public review.

Practicable means capable of being accomplished within existing constraints, depending on the situation and including consideration of many factors, such as the existing environment, cost, technology, and implementation time.

Preserve means to prevent modification to the natural floodplain or wetland environment or to maintain it as closely as possible to its natural state.

Restore means to reestablish a setting or environment in which the natural functions of the floodplain or wetland can again operate.

Structure means a walled or roofed building, including mobile homes and gas or liquid storage tanks.

Wetland means an area that is inundated or saturated by surface or groundwater at a frequency and duration sufficient to support, and that under normal circumstances does support, a prevalence of vegetation typically adapted for life in saturated soil conditions, including swamps, marshes, bogs, and similar areas.

Wetland action means any DOE action related to new construction that takes place in a wetland not located in a floodplain, subject to the exclusions specified at § 1022.5(c) and (d) of this part.

§ 1022.5 Applicability.

(a) This part applies to all organizational units of DOE, including the National Nuclear Security Administration, except that it shall not apply to the Federal Energy Regulatory Commission.

(b) This part applies to all proposed floodplain or wetland actions, including those sponsored jointly with other agencies.

(c) This part does not apply to the issuance by DOE of permits, licenses, or allocations to private parties for activities involving a wetland that are located on non-Federal property.

(d) Subject to paragraph (e) of this section, subpart B of this part does not apply to:

(1) Routine maintenance of existing facilities and structures on DOE property in a floodplain or wetland. Maintenance is routine when it is needed to maintain and preserve the facility or structure for its designated purpose (*e.g.*, activities such as reroofing, plumbing repair, door and window replacement);

(2) Site characterization, environmental monitoring, or environmental research activities (*e.g.*, sampling and surveying water and air quality, flora and fauna abundance, and soil properties) in a floodplain or wetland, unless these activities would involve building any structure; involve draining, dredging, channelizing, filling, diking, impounding, or related activities; or result in long-term change to the ecosystem; and

(3) Minor modification (*e.g.*, upgrading lighting, heating, ventilation, and air conditioning systems; installing or improving alarm and surveillance systems; and adding environmental monitoring or control systems) of an existing facility or structure in a floodplain or wetland to improve safety or environmental conditions unless the modification would result in a significant change in the expected useful life of the facility or structure, or involve building any structure or involve draining, dredging, channelizing, filling, diking, impounding, or related activities.

(e) Although the actions listed in paragraphs (d)(1), (d)(2), and (d)(3) of this section normally have very small or no adverse impact on a floodplain or wetland, where unusual circumstances indicate the possibility of adverse impact on a floodplain or wetland, DOE shall determine the need for a floodplain or wetland assessment.

§ 1022.6 Public inquiries.

Inquiries regarding DOE's floodplain and wetland environmental review requirements may be directed to the Office of NEPA Policy and Compliance, U.S. Department of Energy, 1000 Independence Avenue, SW., Washington, DC 20585–0119, 202–586–4600, or a message may be left at 1–800–472–2756, toll free.

Subpart B—Procedures for Floodplain and Wetland Reviews

§ 1022.11 Floodplain or wetland determination.

(a) Concurrent with its review of a proposed action to determine appropriate NEPA or CERCLA process requirements, DOE shall determine the applicability of the floodplain management and wetland protection requirements of this part.

(b) DOE shall determine whether a proposed action would be located within a base or critical action floodplain consistent with the most authoritative information available relative to site conditions from the following sources, as appropriate:

(1) Flood Insurance Rate Maps or Flood Hazard Boundary Maps prepared by FEMA;

(2) Information from a land-administering agency (*e.g.*, Bureau of Land Management) or from other government agencies with floodplain-determination expertise (*e.g.*, U.S. Army Corps of Engineers, Natural Resources Conservation Service);

(3) Information contained in safety basis documents as defined at 10 CFR part 830; and

(4) DOE environmental documents, *e.g.*, NEPA and CERCLA documents.

(c) DOE shall determine whether a proposed action would be located within a wetland consistent with the most authoritative information available relative to site conditions from the following sources, as appropriate:

(1) U.S. Army Corps of Engineers ''Wetlands Delineation Manual,'' Wetlands Research Program Technical Report Y–87–1, January 1987, or successor document;

(2) U.S. Fish and Wildlife Service National Wetlands Inventory or other government-sponsored wetland or land-use inventories;

(3) U.S. Department of Agriculture Natural Resources Conservation Service Local Identification Maps;

(4) U.S. Geological Survey Topographic Maps; and

(5) DOE environmental documents, *e.g.*, NEPA and CERCLA documents.

(d) Pursuant to § 1022.5 of this part and paragraphs (b) and (c) of this section, DOE shall prepare:

(1) A floodplain assessment for any proposed floodplain action in the base floodplain or for any proposed floodplain action that is a critical action located in the critical action floodplain; or

(2) A wetland assessment for any proposed wetland action.

§ 1022.12 Notice of proposed action.

(a) For a proposed floodplain or wetland action for which an EIS is required, DOE shall use applicable NEPA procedures to provide the opportunity for early public review of the proposed action. A notice of intent to prepare the EIS may be used to satisfy the requirement for DOE to publish a notice of proposed floodplain or wetland action.

(b) For a proposed floodplain or wetland action for which no EIS is required, DOE shall take appropriate steps to send a notice of proposed floodplain or wetland action to appropriate government agencies (*e.g.*, FEMA regional offices, host and affected States, and tribal and local governments) and to persons or groups known to be interested in or potentially affected by the proposed floodplain or wetland action. DOE also shall distribute the notice in the area where the proposed action is to be located (*e.g.*, by publication in local newspapers, through public service announcements, by posting on- and off-site). In addition, for a proposed floodplain or wetland action that may result in effects of national concern to the floodplain or wetland or both, DOE shall publish the notice in the **Federal Register**.

§ 1022.13 Floodplain or wetland assessment.

(a) A floodplain or wetland assessment shall contain the following information:

(1) *Project Description.* This section shall describe the proposed action and shall include a map showing its location with respect to the floodplain and/or wetland. For actions located in a floodplain, the nature and extent of the flood hazard shall be described, including the nature and extent of hazards associated with any high-hazard areas.

(2) *Floodplain or Wetland Impacts.* This section shall discuss the positive and negative, direct and indirect, and long- and short-term effects of the proposed action on the floodplain and/or wetland. This section shall include impacts on the natural and beneficial floodplain and wetland values (§ 1022.4) appropriate to the location under evaluation. In addition, the effects of a proposed floodplain action on lives and property shall be evaluated. For an action proposed in a wetland, the effects on the survival, quality, and function of the wetland shall be evaluated.

(3) *Alternatives.* DOE shall consider alternatives to the proposed action that avoid adverse impacts and incompatible development in the floodplain and/or wetland, including alternate sites, alternate actions, and no action. DOE shall evaluate measures that mitigate the adverse effects of actions in a floodplain and/or wetland including, but not limited to, minimum grading requirements, runoff controls, design and construction constraints, and protection of ecologically-sensitive areas.

(b) For proposed floodplain or wetland actions for which an EA or EIS is required, DOE shall prepare the floodplain or wetland assessment concurrent with and included in the appropriate NEPA document.

(c) For floodplain or wetland actions for which neither an EA nor an EIS is prepared, DOE shall prepare the floodplain or wetland assessment separately or incorporate it when appropriate into another environmental review process (*e.g.*, CERCLA).

§ 1022.14 Findings.

(a) If DOE finds that no practicable alternative to locating or conducting the action in the floodplain or wetland is available, then before taking action DOE shall design or modify its action in order to minimize potential harm to or within the floodplain or wetland, consistent with the policies set forth in E.O. 11988 and E.O. 11990.

(b) For actions that will be located in a floodplain, DOE shall issue a floodplain statement of findings, normally not to exceed three pages, that contains:

(1) A brief description of the proposed action, including a location map;

(2) An explanation indicating why the action is proposed to be located in the floodplain;

(3) A list of alternatives considered;

(4) A statement indicating whether the action conforms to applicable floodplain protection standards; and

(5) A brief description of steps to be taken to minimize potential harm to or within the floodplain.

(c) For floodplain actions that require preparation of an EA or EIS, DOE may incorporate the floodplain statement of findings into the finding of no significant impact or final EIS, as appropriate, or issue such statement separately.

(d) DOE shall send copies of the floodplain statement of findings to appropriate government agencies (*e.g.*, FEMA regional offices, host and affected states, and tribal and local governments) and to others who submitted comments on the proposed floodplain action.

(e) For proposed floodplain actions that may result in effects of national concern, DOE shall publish the floodplain statement of findings in the **Federal Register**, describing the location of the action and stating where a map is available.

(f) For floodplain actions subject to E.O. 12372—Intergovernmental Review of Federal Programs (July 14, 1982), DOE also shall send the floodplain statement of findings to the State in accordance with 10 CFR part 1005—Intergovernmental Review of Department of Energy Programs and Activities.

§ 1022.15 Timing.

(a) For a proposed floodplain action, DOE shall allow 15 days for public comment following issuance of a notice of proposed floodplain action. After the close of the public comment period and

before issuing a floodplain statement of findings, DOE shall reevaluate the practicability of alternatives to the proposed floodplain action and the mitigating measures, taking into account all substantive comments received. After issuing a floodplain statement of findings, DOE shall endeavor to allow at least 15 days of public review before implementing a proposed floodplain action. If a **Federal Register** notice is required, the 15-day period begins on the date of publication in the **Federal Register.**

(b) For a proposed wetland action, DOE shall allow 15 days for public comment following issuance of a notice of proposed wetland action. After the close of the public comment period, DOE shall reevaluate the practicability of alternatives to the proposed wetland action and the mitigating measures, taking into account all substantive comments received, before implementing a proposed wetland action. If a **Federal Register** notice is required, the 15-day period begins on the date of publication in the **Federal Register.**

§ 1022.16 Variances.

(a) *Emergency actions.* DOE may take actions without observing all provisions of this part in emergency situations that demand immediate action. To the extent practicable prior to taking an emergency action (or as soon as possible after taking such an action) DOE shall document the emergency actions in accordance with NEPA procedures at 10 CFR 1021.343(a) or CERCLA procedures in order to identify any adverse impacts from the actions taken and any further necessary mitigation.

(b) *Timing.* If statutory deadlines or overriding considerations of program or project expense or effectiveness exist, DOE may waive the minimum time periods in § 1022.15 of this subpart.

(c) *Consultation.* To the extent practicable prior to taking an action pursuant to paragraphs (a) or (b) of this section (or as soon as possible after taking such an action) the cognizant DOE program or project manager shall consult with the Office of NEPA Policy and Compliance.

§ 1022.17 Follow-up.

For those DOE actions taken in a floodplain or wetland, DOE shall verify that the implementation of the selected alternative, particularly with regard to any adopted mitigation measures, is proceeding as described in the floodplain or wetland assessment and the floodplain statement of findings.

Subpart C—Other Requirements

§ 1022.21 Property management.

(a) If property in a floodplain or wetland is proposed for license, easement, lease, transfer, or disposal to non-Federal public or private parties, DOE shall:

(1) Identify those uses that are restricted under applicable floodplain or wetland regulations and attach other appropriate restrictions to the uses of the property; or

(2) Withhold the property from conveyance.

(b) Before completing any transaction that DOE guarantees, approves, regulates, or insures that is related to an area located in a floodplain, DOE shall inform any private party participating in the transaction of the hazards associated with locating facilities or structures in the floodplain.

§ 1022.22 Requests for authorizations or appropriations.

It is DOE policy to indicate in any requests for new authorizations or appropriations transmitted to the Office of Management and Budget, if a proposed action is located in a floodplain or wetland and whether the proposed action is in accord with the requirements of E.O. 11988 and E.O. 11990 and this part.

§ 1022.23 Applicant responsibilities.

DOE may require applicants for any use of real property (*e.g.,* license, easement, lease, transfer, or disposal), permits, certificates, loans, grants, contract awards, allocations, or other forms of assistance or other entitlement related to activities in a floodplain or wetland to provide information necessary for DOE to comply with this part.

§ 1022.24 Interagency cooperation.

If DOE and one or more agencies are directly involved in a proposed floodplain or wetland action, in accordance with DOE's NEPA or CERCLA procedures, DOE shall consult with such other agencies to determine if a floodplain or wetland assessment is required by subpart B of this part, identify the appropriate lead or joint agency responsibilities, identify the applicable regulations, and establish procedures for interagency coordination during the environmental review process.

[FR Doc. 03–21775 Filed 8–26–03; 8:45 am]

BILLING CODE 6450–01–P

DEPARTMENT OF TRANSPORTATION

Federal Aviation Administration

14 CFR Part 25

[Docket No. NM262; Special Conditions No. 25–244–SC]

Special Conditions: Avions Marcel Dassault-Breguet Aviation Model Falcon 10 Series Airplanes; High-Intensity Radiated Fields (HIRF)

AGENCY: Federal Aviation Administration (FAA), DOT.

ACTION: Final special conditions; request for comments.

SUMMARY: These special conditions are issued for Avions Marcel Dassault-Breguet Aviation (AMD/BA) Model Falcon 10 series airplanes modified by Elliott Aviation Technical Products Development, Inc. These modified airplanes will have a novel or unusual design feature when compared to the state of technology envisioned in the airworthiness standards for transport category airplanes. The modification incorporates the installation of dual Innovative Solutions & Support (IS&S) Air Data Display Units (ADDU) with the IS&S Air Data Sensor and an analog interface unit (AIU) that perform critical functions. The applicable airworthiness regulations do not contain adequate or appropriate safety standards for the protection of these systems from the effects of high-intensity-radiated fields (HIRF). These special conditions contain the additional safety standards that the Administrator considers necessary to establish a level of safety equivalent to that established by the existing airworthiness standards.

DATES: The effective date of these special conditions is August 19, 2003.

Comments must be received on or before September 26, 2003.

ADDRESSES: Comments on these special conditions may be mailed in duplicate to: Federal Aviation Administration, Transport Airplane Directorate, Attn: Rules Docket (ANM–113), Docket No. NM262, 1601 Lind Avenue SW., Renton Washington, 98055–4056; or delivered in duplicate to the Transport Directorate at the above address. All comments must be marked: Docket No. NM262.

FOR FURTHER INFORMATION CONTACT: Greg Dunn, FAA, Airplane and Flight Crew Interface Branch, ANM–111, Transport Airplane Directorate, Aircraft Certification Service, 1601 Lind Avenue SW., Renton, Washington 98055–4056; telephone (425) 227–2799; facsimile (425) 227–1149.

SUPPLEMENTARY INFORMATION:

FAA's Determination as to Need for Public Process

The FAA has determined that notice and opportunity for prior public comment is unnecessary because the substance of these special conditions has been subject to the public comment process in several prior instances with no substantive comments received. The FAA, therefore, finds that good cause exists for making these special conditions effective upon issuance; however, the FAA invites interested persons to participate in this rulemaking by submitting comments, data, or views. The most helpful comments reference a specific portion of the special conditions, explain the reason for any recommended change, and include supporting data. We ask that you send us two copies of written comments.

We will file in the docket all comments we receive, as well as a report summarizing each substantive public contact with FAA personnel concerning these special conditions. The docket is available for public inspection before and after the comment closing date. If you wish to review the docket in person, go to the address in the **ADDRESSES** section of this preamble between 7:30 a.m. and 4 p.m., Monday through Friday, except Federal holidays.

We will consider all comments we receive on or before the closing date for comments. We will consider comments filed late if it is possible to do so without incurring expense or delay. We may change these special conditions based on the comments we receive.

If you want the FAA to acknowledge receipt of your comments on these special conditions, include with your comments a pre-addressed, stamped postcard on which the docket number appears. We will stamp the date on the postcard and mail it back to you.

Background

On February 25, 2003, Elliott Aviation Technical Products Development, Inc., PO Box 100, Quad City Airport, Moline, Illinois 61266–0100, applied for a Supplemental Type Certificate (STC) to modify Avions Marcel Dassault-Breguet Aviation Model Falcon 10 series airplanes. This model series is currently approved under Type Certificate No. A33EU. The Avions Marcel Dassault-Breguet Aviation Model Falcon 10 series airplanes are a small category airplane powered by two Airesearch Manufacturing Company TFE731–2–1C turbofan engines, and have a maximum takeoff weight of 18,300 pounds. This airplane operates with a 2-pilot crew and can hold up to 9 passengers. The modification incorporates the installation of Innovative Solutions & Support (IS&S) Air Data Display Units (ADDU) with an IS&S Air Data Sensor and Analog Interface Unit (AIU). The ADDU replaces the existing analog flight instrumentation and provides additional functional capability and redundancy in the system. The AIU is a digital-to-analog adapter used to adapt signals driving the existing Sperry Flight Guidance Computer. The avionics/electronics and electrical systems installed in this airplane have the potential to be vulnerable to HIRF external to the airplane.

Type Certification Basis

Under the provisions of 14 CFR 21.101, Elliott Aviation Technical Products Development, Inc. must show that the Avions Marcel Dassault-Breguet Aviation Model Falcon 10 series airplanes, as changed, continue to meet the applicable provisions of the regulations incorporated by reference in Type Certificate No. A33EU, or the applicable regulations in effect on the date of application for the change. The regulations incorporated by reference in the type certificate are commonly referred to as the ''original type certification basis.'' The certification basis for the Avions Marcel Dassault-Breguet Aviation Model Falcon 10 series airplanes includes 14 CFR part 25 as amended by Amendments 25–1 through 25–20, dated February 1, 1964, except for special conditions and exceptions noted in Type Certificate Data Sheet (TDCS) No. A33EU.

If the Administrator finds that the applicable airworthiness regulations (*i.e.*, part 25, as amended) do not contain adequate or appropriate safety standards for the Avions Marcel Dassault-Breguet Aviation Model Falcon 10 series airplanes because of novel or unusual design features, special conditions are prescribed under the provisions of § 21.16.

In addition to the applicable airworthiness regulations and special conditions, the Avions Marcel Dassault-Breguet Aviation Model Falcon 10 series airplanes must comply with the fuel vent and exhaust emission requirements of 14 CFR part 34 and the noise certification requirement of part 36.

Special conditions, as defined in 14 CFR 11.19, are issued in accordance with § 11.38 and become part of the type certification basis in accordance with § 21.101.

Special conditions are initially applicable to the model for which they are issued. Should Elliott Aviation Technical Products Development, Inc. apply at a later date for a supplemental type certificate to modify any other model included on Type Certificate No. A33EU to incorporate the same or similar novel or unusual design feature, these special conditions would also apply to the other model.

Novel or Unusual Design Features

As noted earlier, the Avions Marcel Dassault-Breguet Aviation Model Falcon 10 series airplanes modified by Elliott Aviation Technical Products Development, Inc. will incorporate systems comprised of dual Air Data Display Units and an analog interface unit that will perform critical functions. These systems may be vulnerable to high-intensity radiated fields external to the airplane. The current airworthiness standards of part 25 do not contain adequate or appropriate safety standards for the protection of this equipment from the adverse effects of HIRF. Accordingly, this system is considered to be a novel or unusual design feature.

Discussion

There is no specific regulation that addresses protection requirements for electrical and electronic systems from HIRF. Increased power levels from ground-based radio transmitters and the growing use of sensitive avionics/electronics and electrical systems to command and control airplanes have made it necessary to provide adequate protection.

To ensure that a level of safety is achieved equivalent to that intended by the regulations incorporated by reference, special conditions are needed for Avions Marcel Dassault-Breguet Aviation Model Falcon 10 series airplanes modified by Elliott Aviation Technical Products Development, Inc. These special conditions require that new avionics/electronics and electrical systems that perform critical functions be designed and installed to preclude component damage and interruption of function due to both the direct and indirect effects of HIRF.

High-Intensity Radiated Fields (HIRF)

With the trend toward increased power levels from ground-based transmitters, and the advent of space and satellite communications coupled with electronic command and control of the airplane, the immunity of critical avionics/electronics and electrical systems to HIRF must be established.

It is not possible to precisely define the HIRF to which the airplane will be exposed in service. There is also uncertainty concerning the effectiveness of airframe shielding for HIRF. Furthermore, coupling of electromagnetic energy to cockpit-installed equipment through the cockpit

window apertures is undefined. Based on surveys and analysis of existing HIRF emitters, an adequate level of protection exists when compliance with the HIRF protection special condition is shown with either paragraph 1, **OR** 2 below:

1. A minimum threat of 100 volts rms (root-mean-square) per meter electric field strength from 10 kHz to 18 GHz.

a. The threat must be applied to the system elements and their associated wiring harnesses without the benefit of airframe shielding.

b. Demonstration of this level of protection is established through system tests and analysis.

2. A threat external to the airframe of the field strengths identified in the table below for the frequency ranges indicated. Both peak and average field strength components from the table below are to be demonstrated.

Frequency	Field Strength (volts per meter)	
	Peak	Average
10 kHz–100 kHz	50	50
100 kHz–500 kHz	50	50
500 kHz–2 MHz	50	50
2 MHz–30 MHz	100	100
30 MHz–70MHz	50	50
70 MHz–100 MHz	50	50
100 MHz–200 MHz	100	100
200 MHz–400 MHz	100	100
400 MHz–700 MHz	700	50
700 MHz–1 GHz	700	100
1 GHz–2 GHz	2000	200
2 GHz–4 GHz	3000	200
4 GHz–6 GHz	3000	200
6 GHz–8 GHz	1000	200
8 GHz–12 GHz	3000	300
12 GHz–18 GHz	2000	200
18 GHz–40 GHz	600	200

The field strengths are expressed in terms of peak of the root-mean-square (rms) over the complete modulation period.

The threat levels identified above are the result of an FAA review of existing studies on the subject of HIRF, in light of the ongoing work of the Electromagnetic Effects Harmonization Working Group of the Aviation Rulemaking Advisory Committee.

Applicability

As discussed above, these special conditions are applicable to Avions Marcel Dassault-Breguet Aviation Model Falcon 10 series airplanes modified by Elliott Aviation Technical Products Development, Inc. Should Elliott Aviation Technical Products Development, Inc. apply at a later date for a supplemental type certificate to modify any other model included on Type Certificate No. A33EU to incorporate the same or similar novel or unusual design features, these special conditions would apply to that model as well.

Conclusion

This action affects only certain novel or unusual design features on the Avions Marcel Dassault-Breguet Aviation Model Falcon 10 series airplanes modified by Elliott Aviation Technical Products Development, Inc. It is not a rule of general applicability and affects only the applicant who applied to the FAA for approval of these features on the airplane.

The substance of these special conditions has been subjected to the notice and comment period in several prior instances and has been derived without substantive change from those previously issued. Therefore, the FAA has determined that prior public notice and comment are unnecessary and impracticable, and good cause exists for adopting these special conditions upon issuance. The FAA is requesting comments to allow interested persons to submit views that may not have been submitted in response to the prior opportunities for comment described above.

List of Subjects in 14 CFR Part 25

Aircraft, Aviation safety, Reporting and recordkeeping requirements.

■ The authority citation for these special conditions is as follows:

Authority: 49 U.S.C. 106(g), 40113, 44701, 44702, 44704.

The Special Conditions

■ Accordingly, pursuant to the authority delegated to me by the Administrator, the following special conditions are issued as part of the supplemental type certification basis for the Avions Marcel Dassault-Breguet Aviation Model Falcon 10 series airplanes modified by Elliott Aviation Technical Products Development, Inc.

1. *Protection From Unwanted Effects of High-Intensity Radiated Fields (HIRF).* Each electrical and electronic system that performs critical functions must be designed and installed to ensure that the operation and operational capability of these systems to perform critical functions are not adversely affected when the airplane is exposed to high-intensity radiated fields.

2. For the purpose of these special conditions, the following definition applies: *Critical Functions:* Functions whose failure would contribute to or cause a failure condition that would prevent the continued safe flight and landing of the airplane.

Issued in Renton, Washington, on August 19, 2003.

Ali Bahrami,

Acting Manager, Transport Airplane Directorate, Aircraft Certification Service.

[FR Doc. 03–21959 Filed 8–26–03; 8:45 am]

BILLING CODE 4910–13–P

DEPARTMENT OF TRANSPORTATION

Federal Aviation Administration

14 CFR Part 39

[Docket No. 2002–NM–128–AD; Amendment 39–13269; AD 2003–16–16]

RIN 2120–AA64

Airworthiness Directives; Boeing Model 747–400 Series Airplanes Equipped With General Electric Model CF6–80C2 Series Engines

AGENCY: Federal Aviation Administration, DOT.

ACTION: Final rule.

SUMMARY: This amendment supersedes an existing airworthiness directive (AD), applicable to certain Boeing Model 747–400 series airplanes, that currently requires repetitive tests of the cone brake of the central drive unit (CDU) of the thrust reversers, and corrective actions if necessary. This amendment requires installation of a thrust reverser actuation system (TRAS) lock and various related modifications and installations. Following installation of the TRAS lock, this action also requires repetitive functional tests of the TRAS lock, and corrective action if necessary. These actions are intended to prevent an inadvertent deployment of a thrust reverser during flight, which could result in loss of control of the airplane.

DATES: Effective October 1, 2003.

The incorporation by reference of certain publications, as listed in the regulations, is approved by the Director of the Federal Register as of October 1, 2003.

The incorporation by reference of certain other publications, as listed in the regulations, was approved previously by the Director of the Federal Register as of September 6, 2000 (65 FR 47252, August 2, 2000).

The incorporation by reference of certain other publications, as listed in the regulations, was approved previously by the Director of the Federal Register as of March 13, 2000 (65 FR 5742, February 7, 2000).

The incorporation by reference of certain other publications, as listed in the regulations, was approved previously by the Director of the Federal Register as of August 25, 1999 (64 FR 39003, July 21, 1999).

ADDRESSES: The service information referenced in this AD may be obtained from Boeing Commercial Airplane Group, P.O. Box 3707, Seattle, Washington 98124–2207; and Distribution, Lockheed Martin Technical Services, 1330 Kemper Meadow Drive, suite 110–C, Cincinnati, Ohio 45240. This information may be examined at the Federal Aviation Administration (FAA), Transport Airplane Directorate, Rules Docket, 1601 Lind Avenue, SW., Renton, Washington; or at the Office of the Federal Register, 800 North Capitol Street, NW., suite 700, Washington, DC.

FOR FURTHER INFORMATION CONTACT: Sulmo Mariano, Aerospace Engineer, Propulsion Branch, ANM–140S, FAA, Seattle Aircraft Certification Office, 1601 Lind Avenue, SW., Renton, Washington 98055–4056; telephone (425) 917–6501; fax (425) 917–6590.

SUPPLEMENTARY INFORMATION: A proposal to amend part 39 of the Federal Aviation Regulations (14 CFR part 39) by superseding AD 2000–09–03, amendment 39–11711 (65 FR 25829, May 4, 2000), which is applicable to certain Boeing Model 747–400 series airplanes, was published in the **Federal Register** on January 30, 2003 (68 FR 4731). The action proposed to continue to require repetitive tests of the cone brake of the central drive unit of the thrust reversers, and corrective actions if necessary. The action proposed to add new requirements for installation of a thrust reverser actuation system (TRAS) lock and various related modifications and installations. The action also proposed to require, following installation of the TRAS lock, repetitive functional tests of the TRAS lock, and corrective action if necessary.

Comments

Interested persons have been afforded an opportunity to participate in the making of this amendment. Due consideration has been given to the comments received from a single commenter.

Request To Add Additional Sources of Service Information

The commenter notes that there are later revisions available for certain service bulletins referenced in the proposed AD. The commenter points out the following:

- Lockheed Martin is now Middle River Aircraft Systems (MRAS).
- Lockheed Martin Service Bulletin 78–1007, Revision 1, dated March 18, 1997, has been superseded by MRAS Service Bulletin 78–1007, Revision 2, dated March 10, 1998.
- Lockheed Martin Service Bulletin 78–1020, Revision 2, dated March 20, 1997, has been superseded by MRAS Service Bulletin 78–1020, Revision 3, dated March 16, 1998; and MRAS CF6–80C2B Service Bulletin 78–1020, Revision 4, dated October 10, 2002.

The commenter notes that no additional work is necessary per the new revisions of the service bulletins.

We infer that the commenter is requesting that we revise the final rule to include references to the later revisions of the service bulletins. We concur and have revised paragraphs (d)(2)(i) and (d)(2)(iii) of this AD to reference the service bulletin revisions cited by the commenter as additional acceptable sources of service information.

Request To Accept Additional Software Versions

The same commenter notes that Boeing Service Bulletin 747–31–2242, dated April 18, 1996, which is cited in paragraph (d)(2)(iv) of the proposed AD, specifies installation of integrated display system (IDS) software version 995–0017–012. The commenter similarly notes that Boeing Service Bulletin 747–45–2016 (Revision 1, dated May 2, 1996), which is cited in paragraph (d)(2)(v) of the proposed AD, specifies installation of central maintenance computer (CMC) software version 685–2270–009. The commenter points out that, since the issuance of those service bulletins, the manufacturer has released several additional software versions. The commenter requests that we include the additional software versions as acceptable parts for the purposes of the proposed AD.

We concur and have added references to acceptable versions of the IDS and CMC software into paragraphs (d)(2)(iv) and (d)(2)(v) of this AD, respectively. We note, however, that the manufacturer has delayed release of one of the CMC software versions to which the commenter refers, 685–2270–012. Because we are unable to determine whether that version would be acceptable for compliance with this AD, this final rule does not refer to that version.

Conclusion

After careful review of the available data, including the comments noted above, the FAA has determined that air safety and the public interest require the adoption of the rule with the changes previously described. The FAA has determined that these changes will neither increase the economic burden on any operator nor increase the scope of the AD.

Changes to 14 CFR Part 39/Effect on the AD

On July 10, 2002, the FAA issued a new version of 14 CFR part 39 (67 FR 47997, July 22, 2002), which governs the

FAA's airworthiness directives system. The regulation now includes material that relates to altered products, special flight permits, and alternative methods of compliance. Because we have now included this material in part 39, we no longer need to include it in each individual AD. However, for clarity and consistency in this final rule, we have retained the language of the NPRM regarding that material.

Change to Labor Rate Estimate

Since we issued the proposed AD, we have reviewed the figures we have used over the past several years to calculate AD costs to operators. To account for various inflationary costs in the airline industry, we find it necessary to increase the labor rate used in these calculations from $60 per work hour to $65 per work hour. The cost impact information, below, reflects this increase in the specified hourly labor rate.

Cost Impact

There are approximately 145 airplanes of the affected design in the worldwide fleet. The FAA estimates that 8 airplanes of U.S. registry will be affected by this AD.

The functional test that is currently required by AD 2000–09–03 takes approximately 12 work hours per airplane to accomplish, at an average labor rate of $65 per work hour. Based on these figures, the cost impact of the currently required actions on U.S. operators is estimated to be $6,240, or $780 per airplane, per test cycle.

The installations in Boeing Service Bulletin 747–78–2151, Revision 2, will take approximately 410 work hours per airplane to accomplish, at an average labor rate of $65 per work hour. Required parts will be provided at no charge. Based on these figures, the cost impact of this requirement on U.S. operators is estimated to be $213,200, or $26,650 per airplane.

The installation specified in Lockheed Martin Service Bulletin 78–1007, Revision 1, or MRAS Service Bulletin 78–1007, Revision 2, will take approximately 60 work hours per airplane to accomplish, at an average labor rate of $65 per work hour. Required parts will be provided at no charge. Based on these figures, the cost impact of this requirement on U.S. operators is estimated to be $31,200, or $3,900 per airplane.

The installation specified in Boeing Service Bulletin 747–78–2132, Revision 2, will take approximately 223 work hours per airplane to accomplish, at an average labor rate of $65 per work hour. Required parts will cost between $32,219 and $36,562 per airplane. Based on these figures, the cost impact of this requirement is estimated to be between $46,714 and $51,057 per airplane. The manufacturer may cover the cost of replacement parts associated with this service bulletin, subject to warranty conditions. As a result, the costs attributable to this required action may be less than stated above.

The installation specified in Lockheed Martin Service Bulletin 78–1020, Revision 2, or MRAS Service Bulletin 78–1020, Revision 3 or 4, will take approximately 16 work hours per airplane to accomplish, at an average labor rate of $65 per work hour. Required parts will be provided at no charge. Based on these figures, the cost impact of this requirement on U.S. operators is estimated to be $8,320, or $1,040 per airplane.

The installation specified in Boeing Service Bulletin 747–31–2242 will take approximately 2 work hours per airplane to accomplish, at an average labor rate of $65 per work hour. The cost of required parts will be negligible. Based on these figures, the cost impact of this requirement is estimated to be $1,040, or $130 per airplane. The manufacturer may cover the cost of replacement parts and labor costs associated with accomplishment of this service bulletin, subject to warranty conditions. As a result, the costs attributable to this required action may be less than stated.

The installation specified in Boeing Service Bulletin 747–45–2016, Revision 1, will take approximately 3 work hours per airplane to accomplish, at an average labor rate of $65 per work hour. The cost of required parts will be negligible. Based on these figures, the cost impact of this requirement is estimated to be $1,560, or $195 per airplane. The manufacturer may cover the labor costs associated with accomplishment of this service bulletin, subject to warranty conditions. As a result, the costs attributable to this required action may be less than stated above.

The functional test that will be required following installation of the TRAS lock would take approximately 12 work hours per airplane to accomplish, at an average labor rate of $65 per work hour. Based on these figures, the cost impact of this requirement is estimated to be $6,240, or $780 per airplane, per test cycle.

The cost impact figures discussed above are based on assumptions that no operator has yet accomplished any of the requirements of this AD action, and that no operator would accomplish those actions in the future if this AD were not adopted. The cost impact figures discussed in AD rulemaking actions represent only the time necessary to perform the specific actions actually required by the AD. These figures typically do not include incidental costs, such as the time required to gain access and close up, planning time, or time necessitated by other administrative actions.

Regulatory Impact

The regulations adopted herein will not have a substantial direct effect on the States, on the relationship between the national Government and the States, or on the distribution of power and responsibilities among the various levels of government. Therefore, it is determined that this final rule does not have federalism implications under Executive Order 13132.

For the reasons discussed above, I certify that this action (1) Is not a ''significant regulatory action'' under Executive Order 12866; (2) is not a ''significant rule'' under DOT Regulatory Policies and Procedures (44 FR 11034, February 26, 1979); and (3) will not have a significant economic impact, positive or negative, on a substantial number of small entities under the criteria of the Regulatory Flexibility Act. A final evaluation has been prepared for this action and it is contained in the Rules Docket. A copy of it may be obtained from the Rules Docket at the location provided under the caption **ADDRESSES.**

List of Subjects in 14 CFR Part 39

Air transportation, Aircraft, Aviation safety, Incorporation by reference, Safety.

Adoption of the Amendment

■ Accordingly, pursuant to the authority delegated to me by the Administrator, the Federal Aviation Administration amends part 39 of the Federal Aviation Regulations (14 CFR part 39) as follows:

PART 39—AIRWORTHINESS DIRECTIVES

■ 1. The authority citation for part 39 continues to read as follows:

Authority: 49 U.S.C. 106(g), 40113, 44701.

§ 39.13 [Amended]

■ 2. Section 39.13 is amended by removing amendment 39–11711 (65 FR 25829, May 4, 2000), and by adding a new airworthiness directive (AD), amendment 39–13269, to read as follows:

2003–16–16 Boeing: Amendment 39–13269. Docket 2002–NM–128–AD. Supersedes AD 2000–09–03, Amendment 39–11711.

Applicability: Model 747–400 series airplanes equipped with General Electric (GE) Model CF6–80C2 series engines, certificated in any category.

Note 1: This AD applies to each airplane identified in the preceding applicability provision, regardless of whether it has been modified, altered, or repaired in the area subject to the requirements of this AD. For airplanes that have been modified, altered, or repaired so that the performance of the requirements of this AD is affected, the owner/operator must request approval for an alternative method of compliance in accordance with paragraph (h)(1) of this AD. The request should include an assessment of the effect of the modification, alteration, or repair on the unsafe condition addressed by this AD; and, if the unsafe condition has not been eliminated, the request should include specific proposed actions to address it.

Compliance: Required as indicated, unless accomplished previously.

To prevent an inadvertent deployment of a thrust reverser during flight, which could result in loss of control of the airplane, accomplish the following:

Requirements of AD 2000–09–03

Repetitive Functional Tests

(a) Within 1,000 hours time-in-service after the most recent test of the center drive unit (CDU) cone brake as specified in paragraph (b)(1) of AD 94–15–05, amendment 39–8976; or within 650 hours time-in-service after May 19, 2000 (the effective date of AD 2000–09–03, amendment 39–11711); whichever occurs later: Perform a functional test to detect discrepancies of the CDU cone brake on each thrust reverser as specified in paragraph (a)(1) or (a)(2) of this AD, as applicable.

(1) For Model 747–400 series airplanes equipped with thrust reversers that have not been modified in accordance with Boeing Service Bulletin 747–78–2151 or a production equivalent: Perform the test in accordance with Boeing Service Bulletin 747–78A2166, Revision 1, dated October 9, 1997; or paragraph 3.C. of Boeing Alert Service Bulletin 747–78A2166, Revision 2, dated March 15, 2001; or the applicable section of paragraph III.A. of the Accomplishment Instructions of Boeing Service Bulletin 747–78A2113, Revision 2, dated June 8, 1995; or Revision 3, dated September 11, 1997. Repeat the test thereafter at intervals not to exceed 650 hours time-in-service.

(2) For Model 747–400 series airplanes equipped with thrust reversers that have been modified in accordance with Boeing Service Bulletin 747–78–2151 or a production equivalent: Perform the test in accordance with Appendix 1 (including Figure 1) of this AD, or paragraph 3.C. of Boeing Alert Service Bulletin 747–78A2166, Revision 2, dated March 15, 2001. After the effective date of this AD, only Boeing Alert Service Bulletin 747–78A2166, Revision 2, may be used. Repeat the test thereafter at intervals not to exceed 1,000 hours time-in-service.

Note 2: Accomplishment of the CDU cone brake test during production in accordance with Production Revision Record (PRR) 80452–102 prior to May 19, 2000, is considered acceptable for compliance with the initial test required by paragraph (a) of this AD.

Note 3: Model 747–400 series airplanes, line numbers 1061 and subsequent, equipped with GE CF6–80C2 engines, had a third locking system installed during production in accordance with PRR 80452–102, and were not modified in accordance with Boeing Service Bulletin 747–78–2151 (which is a retrofit action for airplanes having line numbers 700 through 1060 inclusive).

Terminating Action

(b) Accomplishment of the functional test of the CDU cone brake, as specified in paragraph (a) of this AD, constitutes terminating action for the repetitive tests of the CDU cone brake required by paragraph (b)(1) of AD 94–15–05.

Corrective Action

(c) If any functional test required by paragraph (a) of this AD cannot be successfully performed as specified in the referenced service bulletin, or if any discrepancy is detected during any functional test required by paragraph (a) of this AD, accomplish either paragraph (c)(1) or (c)(2) of this AD.

(1) Prior to further flight, repair in accordance with Boeing Service Bulletin 747–78A2166, Revision 1, dated October 9, 1997; Boeing Alert Service Bulletin 747–78A2166, Revision 2, dated March 15, 2001; Boeing Service Bulletin 747–78A2113, Revision 2, dated June 8, 1995; or Revision 3, dated September 11, 1997. After the effective date of this AD, only Boeing Alert Service Bulletin 747–78A2166, Revision 2; or Boeing Service Bulletin 747–78A2113, Revision 2 or Revision 3; may be used.

(2) The airplane may be operated in accordance with the provisions and limitations specified in the operator's FAA-approved Minimum Equipment List, provided that no more than one thrust reverser on the airplane is inoperative.

New Requirements of This AD

Installation of Thrust Reverser Actuator System Lock and Associated Actions

(d) For airplanes listed in Boeing Service Bulletin 747–78–2151, Revision 2, dated January 13, 2000: Within 36 months after the effective date of this AD, do paragraphs (d)(1) and (d)(2) of this AD.

(1) Install and activate a thrust reverser actuator system (TRAS) lock on each thrust reverser per the Accomplishment Instructions of Boeing Service Bulletin 747–78–2151, Revision 1, dated August 21, 1997; as revised by Notice of Status Change (NSC) 747–78–2151 NSC 04, dated November 26, 1997; and NSC 747–78–2151 NSC 05, dated December 18, 1997; or Boeing Service Bulletin 747–78–2151, Revision 2, dated January 13, 2000. The procedures for completing the installation and activating the TRAS lock include replacing a certain microswitch pack with a new one; adding new wires; routing certain new wire bundles; changing certain wiring, circuit breakers, and components; installing thrust-reverser relay panels; and performing a functional test to ensure that the thrust reverser actuation system operates properly.

(2) Prior to or concurrently with the installation required by paragraph (d)(1) of this AD, do the requirements of paragraphs (d)(2)(i), (d)(2)(ii), (d)(2)(iii), (d)(2)(iv), and (d)(2)(v) of this AD.

(i) Install a bracket and fastening hardware for the third locking system on each thrust reverser, per Lockheed Martin Service Bulletin 78–1007, Revision 1, dated March 18, 1997; or Middle River Aircraft Systems Service Bulletin 78–1007, Revision 2, dated March 10, 1998.

(ii) Install wiring provisions in various areas of the airplane, per the Accomplishment Instructions of Boeing Service Bulletin 747–78–2132, Revision 2, dated December 11, 1997.

(iii) Install a TRAS lock (also called an electromechanical lock or brake) and a flexible drive cable on each thrust reverser, per Lockheed Martin Service Bulletin 78–1020, Revision 2, dated March 20, 1997; or Middle River Aircraft Systems Service Bulletin 78–1020, Revision 3, dated March 16, 1998; or Middle River Aircraft Systems CF6–80C2B Service Bulletin 78–1020, Revision 4, dated October 10, 2002.

(iv) Install new integrated display system (IDS) software in six integrated display units and three electronic flight information/engine indication and crew alerting system (EICAS) interface units, per the Accomplishment Instructions of Boeing Service Bulletin 747–31–2242, dated April 18, 1996. Where the service bulletin specifies installation of IDS software version 995–0017–012, installation of IDS software version 995–0017–013, 995–0017–014, 995–0017–015, 995–0017–016, 995–0017–018, 3174–COL–EG5–01, 3177–COL–EG5–02, or 3176–COL–EG5–03 is also acceptable for compliance with this paragraph.

(v) Replace two central maintenance computers (CMC), part number 622–8592–103, with new, improved CMCs, part number 622–8592–105, and install new software for the CMCs, per the Accomplishment Instructions of Boeing Service Bulletin 747–45–2016, Revision 1, dated May 2, 1996. Where the service bulletin specifies installation of CMC software version 685–2270–009, installation of CMC software version 685–2270–010, or 685–2270–011 is also acceptable for compliance with this paragraph.

Repetitive Tests

(e) For airplanes on which a TRAS lock is installed on the thrust reversers: Within 1,000 flight hours after the installation of the TRAS lock, or within 90 flight hours after the effective date of this AD, whichever is later, do a functional test of the TRAS lock (also called an electromechanical lock or brake) per the Accomplishment Instructions of Boeing Alert Service Bulletin 747–78A2166, Revision 2, dated March 15, 2001. Then, repeat this test at least every 1,000 flight hours. If the functional test cannot be successfully performed, before further flight, repair per the Accomplishment Instructions of the service bulletin, and repeat the test until it is successful.

Dispatch Limitations

(f) If, prior to accomplishment of Boeing Service Bulletin 747–78–2151 on any airplane, it becomes necessary to install a thrust reverser with the TRAS lock installed, dispatch of the airplane is allowed per the provisions and limitations specified in the 747–400 Master Minimum Equipment List (MMEL), provided that the thrust reverser assembly that has the TRAS lock installed is deactivated per the 747–400 Dispatch Deviations Guide, Boeing Document D6U10151, dated June 28, 2002. Installation of a thrust reverser without a TRAS lock installed and reactivation of the thrust reverser must be accomplished within the time constraints specified in the MMEL.

(g) If, after accomplishment of Boeing Service Bulletin 747–78–2151 on any airplane, it becomes necessary to install a thrust reverser assembly that does not have the TRAS lock installed, dispatch of the airplane is allowed per the provisions and limitations specified in the Boeing Model 747–400 MMEL, provided that the thrust reverser assembly that does not have the TRAS lock installed is deactivated per the 747–400 Dispatch Deviations Guide, Boeing Document D6U10151, dated June 28, 2002. Installation of a thrust reverser with the TRAS lock installed and reactivation of the thrust reverser must be accomplished within the time constraints specified in the MMEL.

Alternative Methods of Compliance

(h)(1) An alternative method of compliance or adjustment of the compliance time that provides an acceptable level of safety may be used if approved by the Manager, Seattle Aircraft Certification Office (ACO), FAA. Operators shall submit their requests through an appropriate FAA Principal Maintenance Inspector, who may add comments and then send it to the Manager, Seattle ACO.

(2) Alternative methods of compliance, approved previously in accordance with AD 2000–09–03, amendment 39–11711, are not considered to be approved as alternative methods of compliance with this AD.

Note 4: Information concerning the existence of approved alternative methods of compliance with this AD, if any, may be obtained from the Seattle ACO.

Special Flight Permits

(i) Special flight permits may be issued in accordance with sections 21.197 and 21.199 of the Federal Aviation Regulations (14 CFR 21.197 and 21.199) to operate the airplane to a location where the requirements of this AD can be accomplished.

Incorporation by Reference

(j) Unless otherwise provided by this AD, the actions shall be done in accordance with the service bulletins listed in Table 1 of this AD, as applicable:

TABLE 1.—APPLICABLE SERVICE BULLETINS

Service bulletin	Revision	Date
Boeing Service Bulletin 747–31–2242	original	April 18, 1996.
Boeing Service Bulletin 747–45–2016	1	May 2, 1996.
Boeing Service Bulletin 747–78–2132	2	December 11, 1997.
Boeing Service Bulletin 747–78–2151, as revised by	1	August 21, 1997.
Notice of Status Change 747–78–2151 NSC 04 and	NSC 04	November 26, 1997.
Notice of Status Change 747–78–2151 NSC 05	NSC 05	December 18, 1997.
Boeing Service Bulletin 747–78–2151	2	January 13, 2000.
Boeing Service Bulletin 747–78A2113	2	June 8, 1995.
Boeing Service Bulletin 747–78A2113	3	September 11, 1997.
Boeing Service Bulletin 747–78A2166	1	October 9, 1997.
Boeing Alert Service Bulletin 747–78A2166	2	March 15, 2001.
Lockheed Martin Service Bulletin 78–1007	1	March 18, 1997.
Middle River Aircraft Systems Service Bulletin 78–1007	2	March 10, 1998.
Lockheed Martin Service Bulletin 78–1020	2	March 20, 1997.
Middle River Aircraft Systems Service Bulletin 78–1020	3	March 16, 1998.
Middle River Aircraft Systems CF6–80C2B Service Bulletin 78–1020	4	October 10, 2002.

Middle River Aircraft Systems CF6–80C2B Service Bulletin 78–1020, Revision 4, dated October 10, 2002, contains the following list of effective pages:

Page No.	Revision level shown on page	Date shown on page
1, 7, 20	4	October 10, 2002.
2–6, 8–19, 21–37	3	March 16, 1998.

(1) The incorporation by reference of the service bulletins in Table 2 of this AD is approved by the Director of the Federal Register in accordance with 5 U.S.C. 552(a) and 1 CFR part 51. Table 2 follows:

TABLE 2.—SERVICE BULLETINS INCORPORATED BY REFERENCE

Service bulletin	Revision	Date
Boeing Service Bulletin 747–31–2242	original	April 18, 1996.
Boeing Service Bulletin 747–45–2016	1	May 2, 1996.
Boeing Service Bulletin 747–78–2132	2	December 11, 1997.
Boeing Service Bulletin 747–78–2151, as revised by	1	August 21, 1997.

TABLE 2.—SERVICE BULLETINS INCORPORATED BY REFERENCE—Continued

Service bulletin	Revision	Date
Notice of Status Change 747–78–2151 NSC 04 and	NSC 04	November 26, 1997.
Notice of Status Change 747–78–2151 NSC 05	NSC 05	December 18, 1997.
Boeing Service Bulletin 747–78–2151	2	January 13, 2000.
Boeing Alert Service Bulletin 747–78A2166	2	March 15, 2001.
Middle River Aircraft Systems CF6–80C2B Service Bulletin 78–1020	4	October 10, 2002.

(2) The incorporation by reference of the service bulletins in Table 3 of this AD was approved previously by the Director of the Federal Register as of September 6, 2000 (65 FR 47252, August 2, 2000). Table 3 follows:

TABLE 3.—SERVICE BULLETINS PREVIOUSLY INCORPORATED BY REFERENCE

Service bulletin	Revision	Date
Lockheed Martin Service Bulletin 78–1007	1	March 18, 1997.
Middle River Aircraft Systems Service Bulletin 78–1007	2	March 10, 1998.
Lockheed Martin Service Bulletin 78–1020	2	March 20, 1997.
Middle River Aircraft Systems Service Bulletin 78–1020	3	March 16, 1998.

(3) The incorporation by reference of Boeing Service Bulletin 747–78A2113, Revision 2, dated June 8, 1995; and Boeing Service Bulletin 747–78A2113, Revision 3, dated September 11, 1997; was approved previously by the Director of the Federal Register as of March 13, 2000 (65 FR 5742, February 7, 2000).

(4) The incorporation by reference of Boeing Service Bulletin 747–78A2166, Revision 1, dated October 9, 1997; was approved previously by the Director of the Federal Register as of August 25, 1999 (64 FR 39003, July 21, 1999).

(5) Copies may be obtained from Boeing Commercial Airplane Group, P.O. Box 3707, Seattle, Washington 98124–2207; and Distribution, Lockheed Martin Technical Services, 1330 Kemper Meadow Drive, suite 110–C, Cincinnati, Ohio 45240. Copies may be inspected at the FAA, Transport Airplane Directorate, 1601 Lind Avenue, SW., Renton, Washington; or at the Office of the Federal Register, 800 North Capitol Street, NW., suite 700, Washington, DC.

Effective Date

(k) This amendment becomes effective on October 1, 2003.

Appendix 1—Thrust Reverser CDU Cone Brake Test

1. This procedure contains steps to do a check of the holding torque of the CDU cone brake.

2. CDU cone brake check (Figure 1):

A. Prepare to do the check:

(1) Open the fan cowl panels.

(2) Pull up on the manual release handle to unlock the electro-mechanical brake.

(3) Pull the manual brake release lever on the CDU to release the cone brake.

Note: This will release the pre-load tension that may occur during a stow cycle.

(4) Return the manual brake release lever to the locked position to engage the cone brake.

(5) Remove the two bolts that hold the lockout plate to the CDU and remove the lockout plate.

(6) Install a ¼-inch drive and a dial-type torque wrench into the CDU drive pad.

Caution: Do not use more than 100 pound-inches of torque when you do this check. Excessive torque will damage the CDU.

(7) Turn the torque wrench to try to manually extend the translating cowl until you get at least 15 pound-inches.

Note: The cone brake prevents movement in the extend direction only. If you try to measure the holding torque in the retract direction, you will get a false reading.

(8) If the torque is less than 15 pound-inches, you must replace the CDU.

(9) Reinstall the lockout plate.

B. Return the airplane to its usual condition:

(1) Fully retract the thrust reverser (unless already accomplished).

(2) Pull down on the manual release handle on the electro-mechanical brake until the handle fully engages the retaining clip (unless already accomplished).

Note: This will lock the electro-mechanical brake.

(3) Close the fan cowl panels.

BILLING CODE 4910–13–P

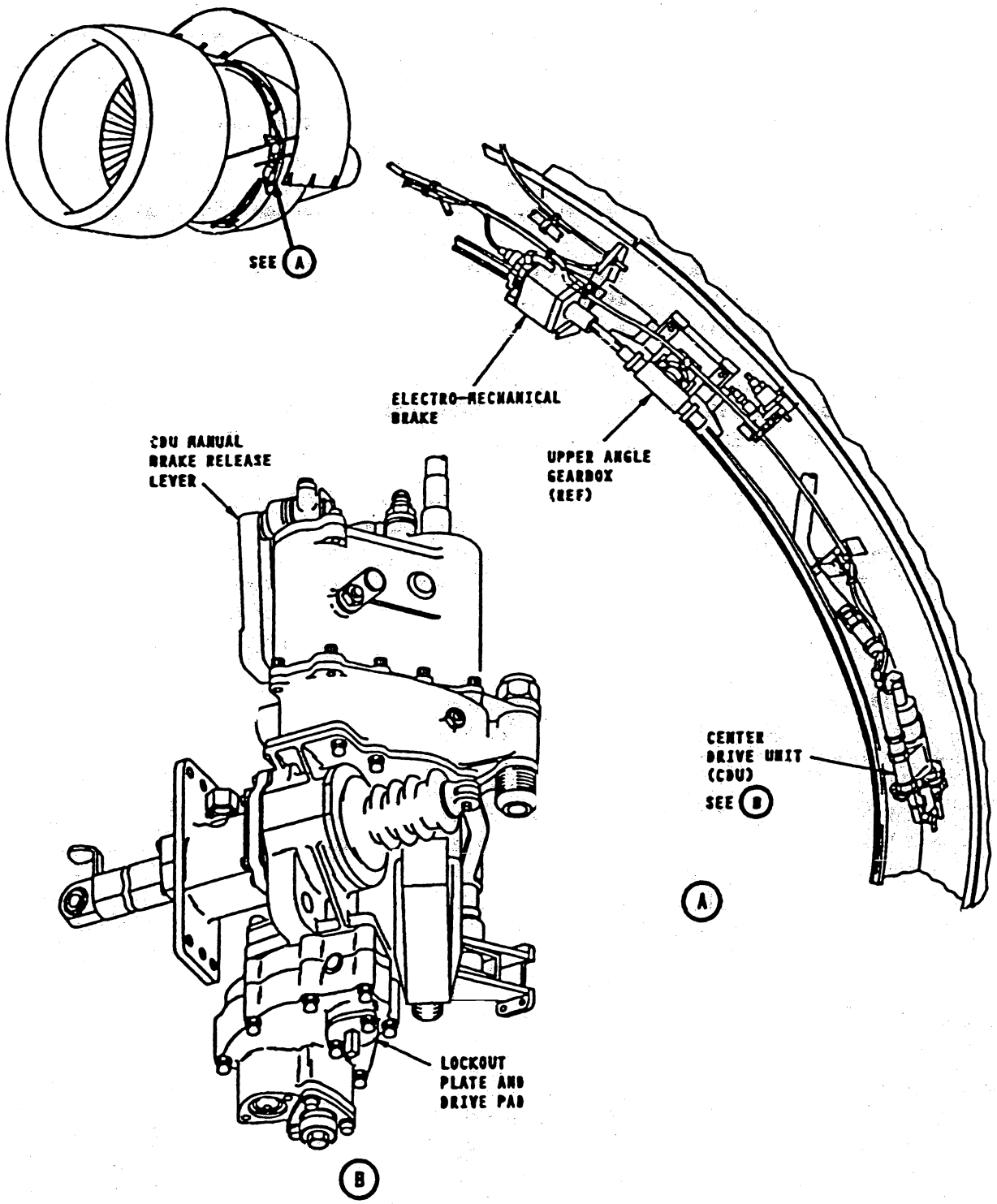

Electro-Mechanical Brake and CDU Cone Brake Torque Check
Figure 1

Issued in Renton, Washington, on August 13, 2003.

Neil D. Schalekamp,

Acting Manager, Transport Airplane Directorate, Aircraft Certification Service.

[FR Doc. 03–21151 Filed 8–26–03; 8:45 am]

BILLING CODE 4910–13–C

DEPARTMENT OF HEALTH AND HUMAN SERVICES

Food and Drug Administration

21 CFR Part 520

Oral Dosage Form New Animal Drugs; Moxidectin Gel

AGENCY: Food and Drug Administration, HHS.

ACTION: Final rule, technical amendment.

SUMMARY: The Food and Drug Administration (FDA) is amending the animal drug regulations to reflect approval of a supplemental new animal drug application (NADA) filed by Fort Dodge Animal Health, Division of Wyeth. The supplemental NADA adds an age precaution to labeling for moxidectin gel used for the control of various species of internal parasites in horses and ponies.

DATES: This rule is effective August 27, 2003.

FOR FURTHER INFORMATION CONTACT: Melanie R. Berson, Center for Veterinary Medicine (HFV–110), Food and Drug Administration, 7500 Standish Pl., Rockville, MD 20855; tel: 301–827–7543; e-mail: *mberson@cvm.fda.gov*.

SUPPLEMENTARY INFORMATION: Fort Dodge Animal Health, Division of Wyeth, 800 Fifth St. NW., Fort Dodge, IA 50501, filed a supplement to NADA 141–087 for QUEST (moxidectin) 2.0% Equine Oral Gel used for the control of various species of internal parasites in horses and ponies. The supplemental NADA adds a precaution to labeling that the product is for oral use in horses and ponies 6 months of age and older. The supplemental NADA is approved as of May 29, 2003, and the regulations are amended in 21 CFR 520.1452 to reflect the approval and to reflect current format. The basis of approval is discussed in the freedom of information summary.

In accordance with the freedom of information provisions of 21 CFR part 20 and 21 CFR 514.11(e)(2)(ii), a summary of safety and effectiveness data and information submitted to support approval of this application may be seen in the Dockets Management Branch (HFA–305), Food and Drug Administration, 5630 Fishers Lane, rm. 1061, Rockville, MD 20852, between 9 a.m. and 4 p.m., Monday through Friday.

The agency has determined under 21 CFR 25.33(d)(1) that this action is of a type that does not individually or cumulatively have a significant effect on the human environment. Therefore, neither an environmental assessment nor an environmental impact statement is required.

This rule does not meet the definition of ''rule'' in 5 U.S.C. 804(3)(A) because it is a rule of ''particular applicability.'' Therefore, it is not subject to the congressional review requirements in 5 U.S.C. 801–808.

List of Subjects in 21 CFR Part 520

Animal drugs.

■ Therefore, under the Federal Food, Drug, and Cosmetic Act and under authority delegated to the Commissioner of Food and Drugs and redelegated to the Center for Veterinary Medicine, 21 CFR part 520 is amended as follows:

PART 520—ORAL DOSAGE FORM NEW ANIMAL DRUGS

■ 1. The authority citation for 21 CFR part 520 continues to read as follows:

Authority: 21 U.S.C. 360b.

■ 2. Section 520.1452 is amended by revising paragraphs (a), (d)(3), and by adding paragraph (c) to read as follows:

§ 520.1452 Moxidectin gel.

(a) *Specifications*. Each milliliter of gel contains 20 milligrams (2 percent) moxidectin.

* * * * *

(c) *Special considerations*. See § 500.25 of this chapter.

(d) * * *

(3) *Limitations*. For oral use in horses and ponies 6 months of age and older. Not for use in horses and ponies intended for food.

Dated: August 13, 2003.

Steven D. Vaughn,

Director, Office of New Animal Drug Evaluation, Center for Veterinary Medicine.

[FR Doc. 03–21834 Filed 8–27–03; 8:45 am]

BILLING CODE 4160–01–S

DEPARTMENT OF HEALTH AND HUMAN SERVICES

Food and Drug Administration

21 CFR Part 520

Oral Dosage Form New Animal Drugs; Moxidectin and Praziquantel Gel

AGENCY: Food and Drug Administration, HHS.

ACTION: Final rule.

SUMMARY: The Food and Drug Administration (FDA) is amending the animal drug regulations to reflect approval of a new animal drug application (NADA) filed by Fort Dodge Animal Health, Division of Wyeth. The NADA provides for use of a moxidectin and praziquantel oral gel for the treatment and control of various species of internal parasites in horses and ponies.

DATES: This rule is effective August 27, 2003.

FOR FURTHER INFORMATION CONTACT: Melanie R. Berson, Center for Veterinary Medicine (HFV–110), Food and Drug Administration, 7500 Standish Pl., Rockville, MD 20855; 301–827–7543; e-mail: *mberson@cvm.fda.gov*.

SUPPLEMENTARY INFORMATION: Fort Dodge Animal Health, Div. of Wyeth, 800 Fifth St. NW., Fort Dodge, IA 50501, filed NADA 141–216 for QUEST PLUS (moxidectin 2.0%/praziquantel 12.5%) Gel for the treatment and control of various species of internal parasites in horses and ponies. The NADA is approved as of May 14, 2003, and part 520 (21 CFR part 520) is amended by adding new § 520.1453 to reflect the approval. The basis of approval is discussed in the freedom of information summary.

In accordance with the freedom of information provisions of 21 CFR part 20 and 21 CFR 514.11(e)(2)(ii), a summary of safety and effectiveness data and information submitted to support approval of this application may be seen in the Dockets Management Branch (HFA–305), Food and Drug Administration, 5630 Fishers Lane, rm. 1061, Rockville, MD 20852, between 9 a.m. and 4 p.m., Monday through Friday.

Under section 512(c)(2)(F)(ii) of the Federal Food, Drug, and Cosmetic Act (21 U.S.C. 360b(c)(2)(F)(ii)), this approval qualifies for 3 years of marketing exclusivity beginning.

The agency has determined under 21 CFR 25.33(d)(1) that this action is of a type that does not individually or cumulatively have a significant effect on the human environment. Therefore,

neither an environmental assessment nor an environmental impact statement is required.

This rule does not meet the definition of ''rule'' in 5 U.S.C. 804(3)(A) because it is a rule of ''particular applicability.'' Therefore, it is not subject to the congressional review requirements in 5 U.S.C. 801–808.

List of Subjects in 21 CFR Part 520

Animal drugs.

■ Therefore, under the Federal Food, Drug, and Cosmetic Act and under authority delegated to the Commissioner of Food and Drugs and redelegated to the Center for Veterinary Medicine, 21 CFR part 520 is amended as follows:

PART 520–ORAL DOSAGE FORM NEW ANIMAL DRUGS

■ 1. The authority citation for 21 CFR part 520 continues to read as follows:

Authority: 21 U.S.C. 360b.

■ 2. Section 520.1453 is added to read as follows:

§ 520.1453 Moxidectin and praziquantel gel.

(a) *Specifications*. Each milliliter of gel contains 20 milligrams (mg) (2.0 percent) moxidectin and 125 mg (12.5 percent) praziquantel.

(b) *Sponsor*. See No. 000856 in § 510.600(c) of this chapter.

(c) *Special considerations*. See § 500.25 of this chapter.

(d) *Conditions of use in horses and ponies*—(1) *Amount*. Administer by mouth as a single dose: 0.4 mg moxidectin per kilogram and 2.5 mg praziquantel per kilogram (2.2 pounds) body weight.

(2) *Indications for use*. For treatment and control of large strongyles (*Strongylus vulgaris* (adults and L4/L5 arterial stages), *S. edentatus* (adults and tissue stages), *Triodontophorus brevicauda* (adults), *T. serratus* (adults)); small strongyles (*Cyathostomum* spp. (adults), *Cyathostomum catinatum* (adults), *Cylicocyclus* spp. (adults), *Cylicostephanus* spp. (adults), *Gyalocephalus capitatus* (adults), undifferentiated lumenal larvae; encysted cyathostomes (late L3 and L4 mucosal cyathostome larvae)); ascarids (*Parascaris equorum* (adults and L4 larval stages)); pinworms (*Oxyuris equi* (adults and L4 larval stages)); hairworms (*Trichostrongylus axei* (adults)); large-mouth stomach worms (*Habronema muscae* (adults)); horse stomach bots (*Gasterophilus intestinalis* (2nd and 3rd instars) and *G. nasalis* (3rd instars)); and tapeworms (*Anoplocephala perfoliata* (adults)). One dose also suppresses strongyle egg production for 84 days.

(3) *Limitations*. For oral use in horses and ponies 6 months of age and older. Not for use in horses and ponies intended for food.

Dated: August 13, 2003.

Stephen F. Sundlof,

Director, Center for Veterinary Medicine.

[FR Doc. 03–21833 Filed 8–26–03; 8:45 am]

BILLING CODE 4160–01–S

DEPARTMENT OF THE TREASURY

Internal Revenue Service

26 CFR Parts 1 and 602

[TD 9075]

RIN 1545–AX52

Compensation Deferred Under Eligible Deferred Compensation Plans; Correction

AGENCY: Internal Revenue Service (IRS), Treasury.

ACTION: Correction to final regulations.

SUMMARY: This document contains final regulations that provide guidance on deferred compensation plans of state and local governments and tax-exempt entities. The regulations reflect the changes made to section 457 by the Tax Reform Act of 2986, the Small Business Job Protection Act of 1996, the Taxpayer Relief Act of 1997, the Economic Growth and Tax Relief Reconciliation Act of 2001, the Job Creation and Worker Assistant Act of 2002, and other legislation. This document was published in the **Federal Register** on July 11, 2003 (68 FR 41230).

EFFECTIVE DATE: These final regulations are effective July 11, 2003.

FOR FURTHER INFORMATION CONTACT: Cheryl Press (202) 622–6060 (not a toll-free number).

SUPPLEMENTARY INFORMATION:

Background

The final regulations that are the subject of these corrections are under sections 457 by the Tax Reform Act of 1986, the Small Business Job Protection Act of 1996, the Taxpayer Relief Act of 1997, the Economic Growth and Tax Relief Reconciliation Act of 2001, the Job Creation and Worker Assistance Act of 2002, and other legislation.

Need for Correction

As published, the final regulations (TD 9075) contain errors that may prove to be misleading and are in need of clarification.

Correction of Publication

■ Accordingly, the publication of the final regulations (TD 9075), which are the subject of FR Doc. 03–17523, is corrected as follows:

§ 1.457–2 [Corrected]

■ 1. On page 41235, column 2, § 1.457–2, paragraph (k), line 10, the language ''treated as agreements or arrangement'' is corrected to read ''treated as agreements or arrangements''.

■ 2. On page 41235, column 3, § 1.457–2, paragraph (i), line 5, the language ''amended by section 1011(e)(6) of'' is corrected to read ''amended by section 1011(e)(6) of the''.

■ 3. On page 41235, column 3, § 1.457–2, paragraph (ii), line 2, the language ''nonelective deferred a compensation'' is corrected to read ''nonelective deferred compensation''.

§ 1.457–4 [Corrected]

■ 4. On page 41236, column 2, § 1.457–4, paragraph (i), of *Example 1,* line 5, the language ''compensation for that year. Participant A is'' is corrected to read ''compensation for that year. A is''.

■ 5. On page 41236, column 3, § 1.457–4, paragraph (b)(ii), paragraph (i), of *Example 3,* line 3, the language ''per year for five years to Participant B's'' is corrected to read ''per year for five years to B's''.

■ 6. On page 41236, column 3, § 1.457–4, paragraph (i), of *Example 3,* lines 3 thru 7, the language ''per year for five years to Participant B's eligible plan account. B's interest in the account vests in 2006. B has annual compensation of $50,000 in each of the five years 2002 through 2006. Participant B is 41'' is corrected to read ''per year for five years to B's eligible plan account. B's interest in the account vests in 2006. B has annual compensation of $50,000 in each of the five years 2002 through 2006. B is 41''.

■ 7. On page 41236, column 3, § 1.457–4, paragraph (ii), of *Example 3,* line 6, the language ''amounts deferred, $17,000, is in excess of the'' is corrected to read ''amounts deferred, $17,000, is in excess of''.

§ 1.457–5 [Corrected]

■ 8. On page 41241, column 1, § 1.457–5, paragraph (i), of *Example 2,* the language ''four eligible plans during 2006: Plan W'' is corrected to read ''four eligible plans during 2006 Plan W''.

§ 1.457–6 [Corrected]

■ 9. On page 41242, column 2, § 1.457–6, paragraph (e)(2), third line from the bottom of the paragraph, the language ''but allow participants or beneficiary

to'' is corrected to read ''but allow a participant or beneficiary''.

§ 1.457–7 [Corrected]

■ 10. On page 41244, column 2, § 1.457–7, paragraph (i), of Example 1, line 18, the language ''participant K, a calendar year taxpayer, has'' is corrected to read ''K, a calendar year taxpayer, has''.

§ 1.457–8 [Corrected]

■ 11. On page 41245, column 3, § 1.457–8, paragraph (b)(2), line 2, the language ''purposes of a paragraph (b)(1) of this'' is corrected to read ''purposes of paragraph (b)(1) of this''.

§ 1.457–9 [Corrected]

■ 12. On page 41246, column 1, § 1.457–9, paragraph (a), line 7, the language ''1.457–8 or 1.447–10. However, the plan'' is corrected to read ''§ 1.457–8 or § 1.447–10. However, the plan''.

§ 1.457–10 [Corrected]

■ 13. On page 41246, column 1, § 1.457–10, paragraph (a)(2), line 8, the language ''under a paragraph (a)(2)(ii) of this'' is corrected to read ''under paragraph (a)(2)(ii) of this''.

■ 14. On page 41246, column 3, § 1.457–10, paragraph (b), line 6, the language ''the conditions in paragraph (b)(2), (3),'' is corrected to read ''the conditions in paragraphs (b)(2), (3),''.

LaNita Van Dyke,

Acting Chief, Publication and Regulations Branch, Legal Processing Division, Associate Chief Counsel (Procedure and Administration).

[FR Doc. 03–21826 Filed 8–26–03; 8:45 am]

BILLING CODE 4830–01–P

DEPARTMENT OF THE INTERIOR

Office of Surface Mining Reclamation and Enforcement

30 CFR Part 938

[PA–142–FOR]

Pennsylvania Regulatory Program

AGENCY: Office of Surface Mining Reclamation and Enforcement (OSM), Interior.

ACTION: Final rule.

SUMMARY: We are removing a required amendment to the Pennsylvania regulatory program (the Pennsylvania program) under the Surface Mining Control and Reclamation Act of 1977 (SMCRA or the Act). The amendment required a review and approval of the configuration and species composition for reclaimed forest land on either a site-by-site basis or a program wide basis by the Pennsylvania Bureau of Forestry. By removing the amendment, we find that the identified Pennsylvania regulations are no less effective than the corresponding Federal Regulations.

EFFECTIVE DATE: August 27, 2003.

FOR FURTHER INFORMATION CONTACT: George Rieger, Acting Director, Harrisburg Field Office, Telephone: (717) 782–4036, e-mail: grieger@osmre.gov.

SUPPLEMENTARY INFORMATION:

Table of Contents

I. Background on the Pennsylvania Program
II. Submission of the Proposed Amendment
III. OSM's Findings
IV. Summary and Disposition of Comments
V. OSM's Decision
VI. Procedural Determinations

I. Background on the Pennsylvania Program

Section 503(a) of the Act permits a State to assume primacy for the regulation of surface coal mining and reclamation operations on non-Federal and non-Indian lands within its borders by demonstrating that its State program includes, among other things, ''a State law which provides for the regulation of surface coal mining and reclamation operations in accordance with the requirements of the Act * * *; and rules and regulations consistent with regulations issued by the Secretary pursuant to the Act.'' *See* 30 U.S.C. 1253(a)(1) and (7). On the basis of these criteria, the Secretary of the Interior conditionally approved the Pennsylvania program on July 30, 1982. You can find background information on the Pennsylvania program, including the Secretary's findings, the disposition of comments, and conditions of approval in the July 30, 1982, **Federal Register** (47 FR 33050). You can also find later actions concerning Pennsylvania's program and program amendments at 30 CFR 938.11, 938.12, 938.15 and 938.16.

II. Submission of the Proposed Amendment

By letter dated January 30, 2002 (Administrative Record No. PA 803.23), the Pennsylvania Department of Environmental Protection (PADEP) submitted a comparison of the State regulations at 25 Pennsylvania (Pa.) Code sections 87.151(d), 89.86(e)(2)(ii)(C), and 90.155(d) and the corresponding Federal regulations along with its explanation of why Pennsylvania's regulations are no less effective than their Federal counterparts regarding approval of the configuration and species composition for reclaimed forest land. This letter was submitted in response to the required amendment to the Pennsylvania program codified at 30 CFR 938.16(fff). Following this correspondence, OSM's Harrisburg Field Office, by letter dated February 22, 2002 (Administrative Record No. PA 803.24), submitted a request to the Pennsylvania Department of Conservation and Natural Resource's Bureau of Forestry that it review the regulations at issue. By letter dated March 20, 2002 (Administrative Record No. PA 803.25), the Bureau of Forestry approved the subject regulations. The Bureau of Forestry also noted that it supported the use of native species when practical and discourages the use of invasive species.

We announced our proposal to remove the required amendment in the June 3, 2003, **Federal Register** (68 FR 33037). In the same document, we opened the public comment period and provided an opportunity for a public hearing or meeting on removing the required amendment. We did not hold a public hearing or meeting because no one requested one. The public comment period ended on July 3, 2003. We received comments from two Federal agencies (the United States Environmental Protection Agency, Region III, and the United States Department of Labor, Mine Safety and Health Administration's New Stanton and Wilkes-Barre Offices). We also received comments from two State agencies (the Pennsylvania Game Commission and the Pennsylvania Historical and Museum Commission, Bureau for Historic Preservation).

III. OSM's Findings

Following are the findings we made concerning removing the required amendment under SMCRA and the Federal regulations at 30 CFR 732.15 and 732.17. We are removing the required amendment because in the March 20th letter, the Bureau of Forestry stated that it ''approve[d] of the Pennsylvania DEP Protection Regulations, particularly the relevant portions of Sections 87.151(d), 89.86(e)(2)(ii)(C), 90.155(d), 90.155(c), 87.155(b)(2), 89.86(e)(2)(ii), and 90.159(b)(2).'' The former three regulations approved in the Bureau's letter contain species composition and configuration rules that apply to reclaimed forest land. Because the Bureau has approved the configuration and species composition for reclaimed forest land, as required under 30 CFR 938.16(fff), we have found that Pennsylvania has met the conditions of the required amendment and we are removing it.

IV. Summary and Disposition of Comments

Public Comments

We asked for public comments on the amendment (Administrative Record No. PA 803.28), but we did not receive any.

Federal Agency Comments

Under 30 CFR 732.17(h)(11)(i) and section 503(b) of SMCRA, we requested comments on the amendment from various Federal agencies with an actual or potential interest in the Pennsylvania program (Administrative Record No. PA 803.28). On July 1, 2003 (Administrative Record No. PA 803.31), the United States Department of Labor, Mine Safety and Health Administration's (MSHA) New Stanton Office wrote to us indicating that the proposed rule did not conflict with any of its rules or regulations. On July 3, 2003 (Administrative Record No. PA 803.30), MSHA's Wilkes-Barre Office wrote to us noting that it had no comments on the proposal.

State Agency Comments

The Pennsylvania Game Commission (PGC) commented on June 24, 2003 (Administrative Record No. PA 803.29), that it generally approves a species composition that contains a minimum of 75% woody species. However, some endangered and threatened species may require more than 25% of their habitat to be open grassy areas devoid of trees and shrubs. PGC noted that in those cases, it must have the ability to alter the tree to grass ratios. PGC further noted that it supports the recommendations of the Bureau of Forestry and believes that removal of the proposed amendment satisfies the applicable criteria of 30 CFR 732.15.

We believe that the Pennsylvania program currently provides regulations that satisfy PGC's concerns regarding species composition. Pennsylvania's regulations at 25 Pa. Code 87.151(d), 89.86(e)(2)(ii)(C), and 90.155(d) provide that the vegetation configuration and species composition for a postmining land use of fish and wildlife habitat must be established in accordance with guidelines from the Fish and Boat Commission and the PGC. Thus, the program provides for input by the PGC on species composition. In addition, the regulations at 25 Pa. Code 87.138, 89.82, and 90.150 provide protections for threatened and endangered species that require consultation with the PGC. This section also provides additional guidelines for selecting and planting vegetation on areas where the approved postmining land use is fish and wildlife habitat.

The Pennsylvania Historical and Museum Commission, Bureau for Historic Preservation (PHMC) submitted comments on July 3, 2003 (Administrative Record No. PA 803.32). PHMC indicated that removing the referenced amendment will not affect the consideration of cultural resources in the mine reclamation process. PHMC further stated it supported the Pennsylvania Bureau of Forestry recommendation to avoid the use of invasive species which can be harmful to the environment and historic buildings and landscapes.

We agree with PHMC's assessment on removal of the required amendment. With regard to PHMC's comment on invasive species, which reflected the Bureau of Forestry's recommendation, Pennsylvania's regulations are no less effective than the Federal regulations at 30 CFR 816/817.111. The Federal regulations require that the revegetation be comprised of native species or, where necessary to achieve the postmining land use, an approved introduced species; be compatible with plant and animal species of the area, and ''meet the requirements of applicable State and Federal seed, poisonous and noxious plant and introduced species laws or regulations.'' Similarly, Pennsylvania's regulations at 25 Pa. Code 87.147, 87.149, 89.86, 90.151 and 90.153 also require that the revegetation be of the same seasonal variety native to the area unless an introduced species is necessary to achieve the postmining land use; compatible with animal and plant species; can not be poisonous or noxious species; and must meet the applicable requirements of State and Federal seed and introduced species statutes. Additionally, Pennsylvania informed us in its January 30, 2002 (Administrative Record No. PA 803.23), letter supporting removal of the required amendment that the configuration and species composition for reclaiming forestland is reviewed and approved on a permit-by-permit basis by foresters in its District Mining Offices.

Environmental Protection Agency (EPA) Comments

Under 30 CFR 732.17(h)(11)(i) we requested comments on the amendment from EPA (Administrative Record No. PA 803.28). EPA responded on July 17, 2003 (Administrative Record No. PA 803.33), that it has determined that removal of the required amendment at 30 CFR 938.16(fff) would not be inconsistent with the Clean Water Act or other statutes or regulations under its jurisdiction.

V. OSM's Decision

Based on the above findings, we are removing the required amendment at 30 CFR 938.16(fff).

VI. Procedural Determinations

Executive Order 12630—Takings

This rule does not have takings implications. This determination is based on the analysis performed for the counterpart Federal regulation.

Executive Order 12866—Regulatory Planning and Review

This rule is exempted from review by the Office of Management and Budget under Executive Order 12866.

Executive Order 12988—Civil Justice Reform

The Department of the Interior has conducted the reviews required by section 3 of Executive Order 12988 and has determined that this rule meets the applicable standards of subsections (a) and (b) of that section. However, these standards are not applicable to the actual language of State regulatory programs and program amendments because each program is drafted and promulgated by a specific State, not by OSM. Under sections 503 and 505 of SMCRA (30 U.S.C. 1253 and 1255) and the Federal regulations at 30 CFR 730.11, 732.15, and 732.17(h)(10), decisions on proposed State regulatory programs and program amendments submitted by the States must be based solely on a determination of whether the submittal is consistent with SMCRA and its implementing Federal regulations and whether the other requirements of 30 CFR parts 730, 731, and 732 have been met.

Executive Order 13132—Federalism

This rule does not have Federalism implications. SMCRA delineates the roles of the Federal and State governments with regard to the regulation of surface coal mining and reclamation operations. One of the purposes of SMCRA is to ''establish a nationwide program to protect society and the environment from the adverse effects of surface coal mining operations.'' Section 503(a)(1) of SMCRA requires that State laws regulating surface coal mining and reclamation operations be ''in accordance with'' the requirements of SMCRA, and section 503(a)(7) requires that State programs contain rules and regulations ''consistent with'' regulations issued by the Secretary pursuant to SMCRA.

Executive Order 13175—Consultation and Coordination With Indian Tribal Governments

In accordance with Executive Order 13175, we have evaluated the potential effects of this rule on Federally-recognized Indian tribes and have determined that the rule does not have substantial direct effects on one or more Indian tribes, on the relationship between the Federal Government and Indian tribes, or on the distribution of power and responsibilities between the Federal Government and Indian tribes. Pennsylvania does not regulate any Native Tribal lands.

Executive Order 13211—Regulations That Significantly Affect the Supply, Distribution, or Use of Energy

On May 18, 2001, the President issued Executive Order 13211 which requires agencies to prepare a Statement of Energy Effects for a rule that is (1) considered significant under Executive Order 12866, and (2) likely to have a significant adverse effect on the supply, distribution, or use of energy. Because this rule is exempt from review under Executive Order 12866 and is not expected to have a significant adverse effect on the supply, distribution, or use of energy, a Statement of Energy Effects is not required.

National Environmental Policy Act

This rule does not require an environmental impact statement because section 702(d) of SMCRA (30 U.S.C. 1292(d)) provides that agency decisions on proposed State regulatory program provisions do not constitute major Federal actions within the meaning of section 102(2)(C) of the National Environmental Policy Act (42 U.S.C. 4332(2)(C)).

Paperwork Reduction Act

This rule does not contain information collection requirements that require approval by OMB under the Paperwork Reduction Act (44 U.S.C. 3507 *et seq.*).

Regulatory Flexibility Act

The Department of the Interior certifies that this rule will not have a significant economic impact on a substantial number of small entities under the Regulatory Flexibility Act (5 U.S.C. 601 *et seq.*). The State submittal, which is the subject of this rule, is based upon counterpart Federal regulations for which an economic analysis was prepared and certification made that such regulations would not have a significant economic effect upon a substantial number of small entities. In making the determination as to whether this rule would have a significant economic impact, the Department relied upon data and assumptions for the counterpart Federal regulations.

Small Business Regulatory Enforcement Fairness Act

This rule is not a major rule under 5 U.S.C. 804(2), the Small Business Regulatory Enforcement Fairness Act. This rule: (a) Does not have an annual effect on the economy of $100 million; (b) Will not cause a major increase in costs or prices for consumers, individual industries, Federal, State, or local government agencies, or geographic regions; and (c) Does not have significant adverse effects on competition, employment, investment, productivity, innovation, or the ability of U.S.-based enterprises to compete with foreign-based enterprises. This determination is based upon the fact that the Pennsylvania submittal, which is the subject of this rule, is based upon counterpart Federal regulations for which an analysis was prepared and a determination made that the Federal regulation was not considered a major rule.

Unfunded Mandates

This rule will not impose an unfunded mandate on State, local, or tribal governments or the private sector of $100 million or more in any given year. This determination is based upon the fact that the Pennsylvania submittal, which is the subject of this rule, is based upon counterpart Federal regulations for which an analysis was prepared and a determination made that the Federal regulation did not impose an unfounded mandate.

List of Subjects in 30 CFR Part 938

Intergovernmental relations, Surface mining, Underground mining.

Dated: August 7, 2003.

Brent Wahlquist,

Regional Director, Appalachian Regional Coordinating Center.

■ For the reasons set out in the preamble, 30 CFR part 938 is amended as set forth below:

PART 938—PENNSYLVANIA

■ 1. The authority citation for part 938 continues to read as follows:

Authority: 30 U.S.C. 1201 *et seq.*

§ 938.16 [Amended]

■ 2. Section 938.16 is amended by removing and reserving paragraph (fff).

[FR Doc. 03–21876 Filed 8–26–03; 8:45 am]

BILLING CODE 4310–05–P

DEPARTMENT OF HOMELAND SECURITY

Coast Guard

33 CFR Part 165

[CGD09–03–261]

RIN 1625–AA00

Safety Zone; Lake Michigan, Chicago, IL

AGENCY: Coast Guard, DHS.

ACTION: Temporary final rule.

SUMMARY: The Coast Guard is establishing a temporary safety for the Chicago to Saint Joseph sailboat race. The safety zone encompasses a portion of Lake Michigan. This safety zone is necessary to ensure vessel safety in the vicinity of the race start area, protecting both competitors and spectators from hazards associated with this sail boat race. This safety zone is intended to restrict vessel traffic from a portion of southern Lake Michigan.

DATES: This temporary final rule is effective from 7 a.m. until 10 a.m. on August 29, 2003.

ADDRESSES: Documents indicated in this preamble as being available in the docket are part of docket CDG09–03–261 and are available for inspection or copying at U.S. Coast Guard Marine Safety Office, 215 W. 83rd Street, Burr Ridge, Illinois 60527 between 7:30 a.m. and 4 p.m. Monday through Friday, except Federal holidays.

FOR FURTHER INFORMATION CONTACT: MST2 Kenneth Brockhouse, U.S. Coast Guard Marine Safety Office Chicago, at (630) 986–2125.

SUPPLEMENTARY INFORMATION:

Regulatory Information

We did not publish a notice of proposed rulemaking (NPRM) for this regulation. Under 5 U.S.C. 553(b)(B) and under 5 U.S.C. 553(d)(3), the Coast Guard finds that good cause exists for not publishing an NPRM and for making this rule effective less than 30 days after publication in the **Federal Register**. The permit application was not received in time to publish an NPRM followed by a final rule before the effective date. Delaying this rule would be contrary to the public interest of ensuring the safety of spectators and vessels during this event and immediate action is necessary to prevent possible loss of life or property. The Coast Guard has not received any complaints or negative comments previously with regard to this event.

Background and Purpose

During the start of the Chicago to Saint Joseph sailboat race, the Coast Guard is establishing a safety zone encompassing the starting area. The Coast Guard expects approximately 150 vessels to participate in this event. This safety zone is required to ensure the safety of vessels and spectators from hazards associated with this sailing event. Entry into, transit through or anchoring within this safety zone is prohibited unless authorized by the Captain of the Port Chicago or the designated On-Scene Representative. The Captain of the Port Chicago or the designated On-Scene Representative on scene may be contacted on VHF Channel 16.

Discussion of Rule

The safety zone will encompass all waters of Lake Michigan bounded by the arc of a circle with a 1000-foot radius with its center in approximate position 41°52′67″ N; 087°35′24″ W. These coordinates are based upon North American Datum 1983 (NAD 83). All vessels except those officially participating in this event are prohibited from entering the safety zone without the permission of the Captain of the Port Chicago or his on-scene representative.

Regulatory Evaluation

This proposed rule is not a ''significant regulatory action'' under section 3(f) of Executive Order 12866 and does not require an assessment of potential costs and benefits under section 6(a)(3) of that order. The Office of Management and Budget has not reviewed this rule under that order. It is not significant under the regulatory policies and procedures of the Department of Homeland Security (DHS).

We expect the economic impact of this proposed rule to be so minimal that a full Regulatory Evaluation under the regulatory policies and procedures of DOT is unnecessary.

This determination is based on the minimal time that vessels will be restricted from the zone and the zone is in an area where the Coast Guard expects insignificant adverse impact to mariners from the zones' activation.

Small Entities

Under the Regulatory Flexibility Act (5 U.S.C. 601–612), we have considered whether this proposed rule would have a significant impact on a substantial number of small entities. The term ''small entities'' comprises small businesses, not-for-profit organizations that are independently owned and operated and are not dominant in their fields, and governmental jurisdictions with populations of less than 50,000.

The Coast Guard certifies under 5 U.S.C. 605(b) that this proposed rule would not have a significant economic impact on a substantial number of small entities.

This proposed rule would affect the following entities, some of which might be small entities: The owners or operators of commercial vessels intending to transit a portion of an activated safety zone.

This safety zone will not have a significant economic impact on a substantial number of small entities for the following reasons: The proposed zone is only in effect for 3 hours on the day of the event.

The designated area is being established to allow for maximum use of the waterway for commercial vessels to enjoy the sailboat race in a safe manner. In addition, commercial vessels transiting the area can transit around the area. The Coast Guard will give notice to the public via a Broadcast to Mariners that the regulation is in effect.

Assistance for Small Entities

Under section 213(a) of the Small Business Regulatory Enforcement Fairness Act of 1996 (Public Law 104–121), we want to assist small entities in understanding this rule so that they can better evaluate its effects and participate in the rulemaking process. If the rule would affect your small business, organization, or governmental jurisdiction and you have questions concerning its provisions or options for compliance, please contact Marine Safety Office Chicago (*see* **ADDRESSES.**)

Small businesses may send comments on the actions of Federal employees who enforce, or otherwise determine compliance with, Federal regulations to the Small Business and Agriculture Regulatory Enforcement Ombudsman and the Regional Small Business Regulatory Fairness Boards. The Ombudsman evaluates these actions annually and rates each agency's responsiveness to small business. If you wish to comment on actions by employees of the Coast Guard, call 1–888–REG–FAIR (1–888–734–3247).

Collection of Information

This proposed rule would call for no new collection of information under the Paperwork Reduction Act of 1995 (44 U.S.C. 3501–3520).

Federalism

We have analyzed this proposed rule under Executive Order 13132 and have determined that this rule does not have implications for federalism under that Order.

Unfunded Mandates Reform Act

The Unfunded Mandates Reform Act of 1995 (2 U.S.C. 1531–1538) governs the issuance of Federal regulations that requires Federal agencies to assess the effects of their discretionary regulatory actions. In particular, the Act addresses actions that may result in the expenditure by a State, local, or tribal government, in the aggregate, or by the private sector of $100,000,000 or more in any one year. Though this proposed rule would not result in such an expenditure, we do discuss the effects of this rule elsewhere in this preamble.

Taking of Private Property

This proposed rule would not effect a taking of private property or otherwise have taking implications under Executive Order 12630, Governmental Actions and Interference with Constitutionally Protected Property Rights.

Civil Justice Reform

This proposed rule meets applicable standards in sections 3(a) and 3(b)(2) of Executive Order 12988, Civil Justice Reform, to minimize litigation, eliminate ambiguity, and reduce burden.

Protection of Children

The Coast Guard has analyzed this proposed rule under Executive Order 13045, Protection of Children from Environmental Health Risks and Safety Risks. This rule is not an economically significant rule and does not concern an environmental risk to health or risk to safety that may disproportionately affect children.

Environment

We have considered the environmental impact of this proposed rule and concluded that, under figure 2–1, paragraph 34(g) of Commandant Instruction M16475.1D, this proposed rule is categorically excluded from further environmental documentation. A written categorical exclusion determination is available in the docket for inspection or copying where indicated under **ADDRESSES.**

Energy Effects

We have analyzed this proposed rule under Executive Order 13211, Actions Concerning Regulations That Significantly Affect Energy Supply, Distribution, or Use. We have determined that it is not a ''significant energy action'' under that order because it is not a ''significant regulatory action''

under Executive Order 12866 and is not likely to have a significant adverse effect on the supply, distribution, or use of energy. It has not been designated by the Administrator of the Office of Information and Regulatory Affairs as a significant energy action. Therefore, it does not require a Statement of Energy Effects under Executive Order 13211.

Indian Tribal Governments

This rule does not have tribal implications under Executive Order 13175, Consultation and Coordination with Indian Tribal Governments, because it does not have a substantial direct effect on one or more Indian tribes, on the relationship between the Federal Government and Indian tribes, or on the distribution of power and responsibilities between the Federal Government and Indian tribes.

List of Subjects in 33 CFR Part 165

Harbors, Marine safety, Navigation (water), Reporting and record keeping requirements, Security measures, Waterways.

■ For the reasons discussed in the preamble, the Coast Guard amends 33 CFR part 165 as follows:

PART 165—REGULATED NAVIGATION AREAS AND LIMITED ACCESS AREAS

■ 1. The authority citation for part 165 continues to read as follows:

Authority: 33 U.S.C. 1226, 1231; 46 U.S.C. Chapter 701; 50 U.S.C. 191, 195; 33 CFR 1.05–1(g), 6.04–1, 6.04–6, and 160.5; Pub. L. 107–295, 116 Stat. 2064; Department of Homeland Security Delegation No. 0170.1

■ 2. A new temporary safety zone § 165.T09–261 is added to read as follows:

§ 165.T09–261 Safety Zone; Lake Michigan, Chicago, Illinois.

(a) *Location.* The following is a safety zone: All waters of Lake Michigan bounded by the arc of a circle with a 1000-foot radius with its center in approximate position 41° 52′67″ N; 087° 35′24″ W (NAD 83).

(b) *Effective period.* This section is effective from 7 a.m. until 10 a.m. on August 29, 2003.

(c) *Regulations.* In accordance with § 165.23, entry into this zone is prohibited unless authorized by the Coast Guard Captain of the Port, Chicago, or the designated On-Scene Representative. Section 165.23 also contains other general requirements.

Dated: August 12, 2003.

Terrence W. Carter,

Captain, U.S. Coast Guard, Captain of the Port Chicago.

[FR Doc. 03–21958 Filed 8–26–03; 8:45 am]

BILLING CODE 4910–15–P

DEPARTMENT OF HOMELAND SECURITY

Coast Guard

33 CFR Part 165

[CGD09–03–260]

RIN 1625–AA00

Safety Zone; APBA Silver Cup Race, Lake Michigan, Grand Haven, MI

AGENCY: Coast Guard, DHS.

ACTION: Temporary final rule.

SUMMARY: The Coast Guard is establishing a temporary safety zone for APBA Silver Cup Race. The safety zone is necessary to protect participants and spectators during the event. This safety zone is intended to restrict vessels from a portion of Lake Michigan.

DATES: This temporary final rule is effective from 1 p.m. until 7 p.m. (local) on August 31, 2003. A rain date is scheduled for September 1, 2003 from 12 a.m. (noon) until 7 p.m. (local).

ADDRESSES: Comments and material received from the public, as well as documents indicated in this preamble as being available in the docket, are part of docket [CDG09–03–260] and are available for inspection or copying at Marine Safety Office Chicago, 215 W. 83rd Street, Suite D, Burr Ridge, Illinois 60527, between 7:30 a.m. and 4 p.m., Monday through Friday, except Federal holidays.

FOR FURTHER INFORMATION CONTACT: MST2 Kenneth Brockhouse, U.S. Coast Guard Marine Safety Office Chicago, at (630) 986–2155.

SUPPLEMENTARY INFORMATION:

Regulatory Information

We did not publish a notice of proposed rulemaking (NPRM) for this regulation. Under 5 U.S.C. 553(b)(B), the Coast Guard finds that good cause exists for not publishing an NPRM. Under 5 U.S.C. 553(d)(3), the Coast Guard finds that good cause exists for making this rule effective less than 30 days after publication in the **Federal Register**. The permit application was not received in time to publish an NPRM followed by a final rule before the effective date. Delaying this rule would be contrary to the public interest of ensuring the safety of spectators and vessels during this event and immediate action is necessary to prevent possible loss of life or property. The Coast Guard has not received any complaints or negative comments previously with regard to this event.

Background and Purpose

For the duration of the APBA Silver Cup Race, the Coast Guard is establishing a safety zone encompassing the race area to protect participating vessels and spectators from the hazards associated with a power boat race. The Coast Guard expects approximately 30 to 40 vessels to participate in this event. The likely combination of large numbers of recreational vessels and congested waterways could easily result in serious injuries or fatalities. Establishing a safety zone to control vessel movement around the location of the race area will help ensure the safety of persons and property of these events and help minimize the associated risks. All persons and vessels shall comply with the directions of the Coast Guard Captain of the Port or the designated On-Scene Representative. Entry into, transiting, or anchoring within the safety zone is prohibited unless authorized by the Captain of the Port Chicago or his designated On-Scene Representative and may be reached via VHF radio channel 16.

Discussion of Rule

The safety zone will include all navigable waters of Lake Michigan encompassed by a line connecting the following points beginning at South Pier Head, 43°03.4′ N, 86°15.4′ W; then heading west to 43°03.2′ N, 86°16.2′ W; then south to 43°01.1′ N, 86°15.3′ W; then east to 43°01.4′ N, 86°14.2′ W; then north to 43°03.5′ N, 86°15.0′ W; then back to the point of origin. These coordinates are based upon North American Datum 1983 (NAD 1983).

Regulatory Evaluation

This temporary rule is not a significant regulatory action under section 3(f) of Executive Order 12866 and does not require an assessment of potential costs and benefits under section 6(a)(3) of that order. The Office of Management and Budget has not reviewed it under that order. It is not significant under the regulatory policies and procedures of the Department of Homeland Security (DHS). The Coast Guard expects the economic impact of this proposal to be so minimal that a full Regulatory Evaluation under the regulatory policies and procedures of DHS is unnecessary.

Small Entities

Under the Regulatory Flexibility Act (5 U.S.C. 601–612), the Coast Guard considered whether this rule will have a significant impact on a substantial number of small businesses and not-for-profit organizations that are independently owned and operated are not dominant in their respective fields, and governmental jurisdictions with populations less than 50,000.

The Coast Guard certifies under section 605 (b) of the Regulatory Flexibility Act (5 U.S.C. 601 *et seq.*) that this temporary final rule will not have a significant economic impact on a substantial number of small entities.

Assistance for Small Entities

In accordance with sec. 213(a) of the Small Business Regulatory Enforcement Fairness Act of 1996 (Public Law 104–121), the Coast Guard offered to assist small entities in understanding this rule so that they can better evaluate its effectiveness and participate in the rulemaking process. Small businesses may send comments on the actions of Federal employees who enforce, or otherwise determine compliance with, Federal regulations to the Small Business and Agriculture Regulatory Enforcement Ombudsman and the Regional Small Business Regulatory Fairness Boards. The Ombudsman evaluates these actions annually and rates each agency's responsiveness to small business. If you wish to comment on actions, call 1–888–REG–FAIR (1–888–734–3247).

Collection of Information

This rule contains no information collection requirements under the Paperwork Reduction Act of 1995 (44 U.S.C. 3501–3520).

Federalism

The Coast Guard has analyzed this rule under Executive Order 13132, Federalism, and has determined that this rule does not have implications under that Order.

Unfunded Mandates Reform Act

The Unfunded Mandates Reform Act of 1995 (2 U.S.C. 1531–1538) requires Federal agencies to assess the effects of their discretionary regulatory actions. In particular, the Act addresses actions that may result in the expenditure by a State, local, or tribal government, in the aggregate, or by the private sector of $100,000,000 or more in any one year. Though this rule would not result in such an expenditure, we do discuss the effects of this rule elsewhere in this preamble.

Taking of Private Property

This rule will not affect a taking of private property or otherwise have taking implications under Executive Order 12630, Governmental Actions and Interference with Constitutionally Protected Property Rights.

Civil Justice Reform

This rule meets applicable standards in sections 3(a) and 3 (b)(2) of Executive Order 12988, Civil Justice Reform, to minimize litigation, eliminate ambiguity, and reduce burden.

Protection of Children

The Coast Guard has analyzed this rule under Executive Order 13045, Protection of Children from Environmental Health Risks and Safety Risks. This rule is not an economically significant rule and does not create an environmental risk to health or risk to safety that may disproportionately affect children.

Indian Tribal Governments

This rule does not have tribal implications under Executive Order 13175, Consultation and Coordination with Indian Tribal Governments, because it does not have a substantial direct effect on one or more Indian tribes, on the relationship between the Federal Government and Indian tribes, or on the distribution of power and responsibilities between the Federal Government and Indian tribes.

Environment

We have considered the environmental impact of this rule and concluded that under figure 2–1, paragraph (34)(g), of Commandant Instruction M16475.lC, this rule is categorically excluded from further environmental documentation. A ''Categorical Exclusion Determination'' is available in the docket for inspection or copying where indicated under **ADDRESSES.**

Energy Effects

We have analyzed this rule under Executive Order 13211, Actions Concerning Regulations That Significantly Affect Energy Supply, Distribution, or Use. We have determined that it is not a ''significant energy action'' under that order because it is not a ''significant regulatory action'' under Executive Order 12866 and is not likely to have a significant adverse effect on the supply, distribution, or use of energy. It has not been designated by the Administrator of the Office of Information and Regulatory Affairs as a significant energy action. Therefore, it does not require a Statement of Energy Effects under Executive Order 13211.

List of Subjects in 33 CFR Part 165

Harbors, Marine safety, Navigation (water), Reporting and recordkeeping requirements, Security measures, Waterways.

■ For the reasons discussed in the preamble, the Coast Guard amends 33 CFR part 165 as follows:

PART 165—REGULATED NAVIGATION AREAS AND LIMITED ACCESS AREAS.

■ 1. The authority citation for part 165 continues to read as follows:

Authority: 33 U.S.C. 1226, 1231; 46 U.S.C. Chapter 701; 50 U.S.C. 191, 195; 33 CFR 1.05–1(g), 6.04–1, 6.04–6, and 160.5; Pub. L. 107–295, 116 Stat. 2064; Department of Homeland Security Delegation No. 0170.1

■ 2. A new temporary safety zone § 165.T09–260, is added to read as follows:

§ 165.T09–260 Safety Zone; Lake Michigan, Grand Haven, MI.

(a) *Location.* The following is a safety zone: all navigable waters of Lake Michigan encompassed by a line connecting the following points beginning at South Pier Head at 43°03.4′ N, 86°15.4′ W; then heading west to 43°03.2′ N, 86°16.2′ W; then south to 43°01.1′ N, 86°15.3′ W; then east to 43°01.4′ N, 86°14.2′ W; then north 43°03.5′ N, 86°15.0′ W; then back to the point of origin. (NAD 83).

(b) *Enforcement period.* This section will be enforced from 1 p.m. until 7 p.m. (local) on August 31, 2003.

(c) *Alternate enforcement period.* In the event that inclement weather prevents the events from being held on August 31, this section will be enforced from 12 a.m. (noon) until 7 p.m. (local) on September 1, 2003.

(d) *Regulations.* In accordance with § 165.23, entry into this zone is prohibited unless authorized by the Coast Guard Captain of the Port, Chicago, or the designated On-Scene Representative. Section 165.23 also contains other general requirements.

Dated: August 12, 2003.

Terrence W. Carter,

Captain, U.S. Coast Guard, Captain of the Port Chicago.

[FR Doc. 03–21957 Filed 8–26–03; 8:45 am]

BILLING CODE 4910–59–P

DEPARTMENT OF HOMELAND SECURITY

COAST GUARD

33 CFR PART 165

[CGD09–03–249]

RIN 1625–AA00

Safety Zone; Grundy County Corn Festival, Morris, IL

AGENCY: Coast Guard, DHS.

ACTION: Temporary final rule.

SUMMARY: The Coast Guard is establishing a temporary safety zone for the Grundy County Corn Festival. The safety zone is necessary to protect vessels and spectators from potential airborne hazards during a planned fireworks display over a portion of the Illinois River. This safety zone is intended to restrict vessels from a portion of the Illinois River in Morris, IL.

DATES: This temporary final rule is effective from 8:30 p.m. until 9 p.m. (local) on September 27, 2003.

ADDRESSES: Comments and material received from the public, as well as documents indicated in this preamble as being available in the docket, are part of docket [CDG09–03–249] and are available for inspection or copying at Marine Safety Office Chicago, 215 W. 83rd Street, Suite D, Burr Ridge, Illinois 60527, between 7:30 a.m. and 4 p.m., Monday through Friday, except Federal holidays.

FOR FURTHER INFORMATION CONTACT: MST2 Kenneth Brockhouse, U.S. Coast Guard Marine Safety Office Chicago, at (630) 986–2155.

SUPPLEMENTARY INFORMATION:

Regulatory Information

We did not publish a notice of proposed rulemaking (NPRM) for this regulation. Under 5 U.S.C. 553(b)(B), the Coast Guard finds that good cause exists for not publishing an NPRM. The permit application was not received in time to publish an NPRM followed by a final rule before the effective date. Delaying this rule would be contrary to the public interest of ensuring the safety of spectators and vessels during this event and immediate action is necessary to prevent possible loss of life or property.

Background and Purpose

A temporary safety zone is necessary to ensure the safety of vessels and spectators from the hazards associated with fireworks display. Based on recent accidents that have occurred in other Captain of the Port zones, and the explosives hazard of fireworks, the Captain of the Port Chicago has determined fireworks launches in close proximity to watercraft pose significant risks to public safety and property. The likely combination of large numbers of recreational vessels, congested waterways, punctuated by bright flashes of light, alcohol use, and debris falling into the water could easily result in serious injuries or fatalities. Establishing a safety zone to control vessel movement around the location of the launch platform will help ensure the safety of persons and property of these events and help minimize the associated risks. Entry into, transiting, or anchoring within the safety zone is prohibited unless authorized by the Captain of the Port Chicago or his designated On-Scene representative. The Captain of the Port or his designated On-Scene representative may be contacted via VHF radio Channel 16.

Discussion of Rule

The safety zone will encompass the waters of the Illinois River within the arc of a circle with a 840-foot radius from the fireworks launch site with its center in the approximate position 41°21.2′ N, 088°23.08′ W. These coordinates are based upon North American Datum 1983 (NAD 1983). The size of this zone was determined using the National Fire Prevention Association guidelines and local knowledge concerning wind, waves, and currents.

Regulatory Evaluation

This temporary rule is not a significant regulatory action under section 3(f) of Executive Order 12866 and does not require an assessment of potential costs and benefits under section 6(a)(3) of that order. The Office of Management and Budget has not reviewed it under that order. It is not significant under the regulatory policies and procedures of the Department of Homeland Security (DHS). The Coast Guard expects the economic impact of this proposal to be so minimal that a full Regulatory Evaluation under the regulatory policies and procedures of DHS is unnecessary.

Small Entities

Under the Regulatory Flexibility Act (5 U.S.C. 601–612), the Coast Guard considered whether this rule will have a significant impact on a substantial number of small businesses and not-for-profit organizations that are independently owned and operated are not dominant in their respective fields, and governmental jurisdictions with populations less than 50,000.

The Coast Guard certifies under section 605 (b) of the Regulatory Flexibility Act (5 U.S.C. 601 *et seq.*) that this temporary final rule will not have a significant economic impact on a substantial number of small entities.

Assistance for Small Entities

In accordance with sec. 213(a) of the Small Business Regulatory Enforcement Fairness Act of 1996 (Public Law 104–121), the Coast Guard offered to assist small entities in understanding this rule so that they can better evaluate its effectiveness and participate in the rulemaking process. Small businesses may send comments on the actions of Federal employees who enforce, or otherwise determine compliance with, Federal regulations to the Small Business and Agriculture Regulatory Enforcement Ombudsman and the Regional Small Business Regulatory Fairness Boards. The Ombudsman evaluates these actions annually and rates each agency's responsiveness to small business. If you wish to comment on actions, call 1–888–REG–FAIR (1–888–734–3247).

Collection of Information

This rule contains no information collection requirements under the Paperwork Reduction Act of 1995 (44 U.S.C. 3501–3520).

Federalism

The Coast Guard has analyzed this rule under Executive Order 13132, Federalism, and has determined that this rule does not have implications under that Order.

Unfunded Mandates Reform Act

The Unfunded Mandates Reform Act of 1995 (2 U.S.C. 1531–1538) requires Federal agencies to assess the effects of their discretionary regulatory actions. In particular, the Act addresses actions that may result in the expenditure by a State, local, or tribal government, in the aggregate, or by the private sector of $100,000,000 or more in any one year. Though this proposed rule would not result in such an expenditure, we do discuss the effects of this rule elsewhere in this preamble.

Taking of Private Property

This proposed rule will not affect a taking of private property or otherwise have taking implications under Executive Order 12630, Governmental Actions and Interference with Constitutionally Protected Property Rights.

Civil Justice Reform

This rule meets applicable standards in sections 3(a) and 3 (b) (2) of Executive Order 12988, Civil Justice Reform, to minimize litigation, eliminate ambiguity, and reduce burden.

Protection of Children

The Coast Guard has analyzed this rule under Executive Order 13045, Protection of Children from Environmental Health Risks and Safety Risks. This rule is not an economically significant rule and does not create an environmental risk to health or risk to safety that may disproportionately affect children.

Indian Tribal Governments

This rule does not have tribal implications under Executive Order 13175, Consultation and Coordination with Indian Tribal Governments, because it does not have a substantial direct effect on one or more Indian tribes, on the relationship between the Federal Government and Indian tribes, or on the distribution of power and responsibilities between the Federal Government and Indian tribes.

Environment

We have considered the environmental impact of this rule and concluded that under figure 2–1, paragraph (34) (g), of Commandant Instruction M16475.lC, this rule is categorically excluded from further environmental documentation. A ''Categorical Exclusion Determination'' is available in the docket for inspection or copying where indicated under **ADDRESSES.**

Energy Effects

We have analyzed this proposed rule under Executive Order 13211, Actions Concerning Regulations That Significantly Affect Energy Supply, Distribution, or Use. We have determined that it is not a ''significant energy action'' under that order because it is not a ''significant regulatory action'' under Executive Order 12866 and is not likely to have a significant adverse effect on the supply, distribution, or use of energy. It has not been designated by the Administrator of the Office of Information and Regulatory Affairs as a significant energy action. Therefore, it does not require a Statement of Energy Effects under Executive Order 13211.

List of Subjects in 33 CFR Part 165

Harbors, Marine Safety, Navigation (water), Reporting and Record Keeping Requirements, Security Measures, Waterways.

■ For the reasons discussed in the preamble, the Coast Guard amends 33 CFR part 165 as follows:

PART 165—REGULATED NAVIGATION AREAS AND LIMITED ACCESS AREAS

■ 1. The authority citation for part 165 continues to read as follows:

Authority: 33 U.S.C. 1226, 1231; 46 U.S.C. Chapter 701; 50 U.S.C. 191, 195; 33 CFR 1.05–1(g), 6.04–1, 6.04–6, and 160.5; Pub. L. 107–295, 116 Stat. 2064; Department of Homeland Security Delegation No. 0170.1.

■ 2. A new temporary safety zone § 165.T09–249 is added to read as follows:

§ 165.T09–249 Safety Zone; Grundy County Corn Festival, Morris, IL

(a) *Location*. The following is a safety zone: All waters of the Illinois River bounded by the arc of a circle with a 840-foot radius from the fireworks launch site with its center in the approximate position 41°21.2′ N, 088°23.08′ W (NAD 1983).

(b) *Effective period*. This section is effective from 8:30 p.m. until 9 p.m. (local) on September 27, 2003.

(c) *Regulations*. In accordance with § 165.23, entry into this zone is prohibited unless authorized by the Coast Guard Captain of the Port, Chicago, or the designated On-Scene Representative. Section 165.23 also contains other general requirements.

Dated: August 12, 2003.

Terrence W. Carter,

Captain, U.S. Coast Guard, Captain of the Port Chicago.

[FR Doc. 03–21956 Filed 8–26–03; 8:45 am]

BILLING CODE 4910–15–P

DEPARTMENT OF VETERANS AFFAIRS

38 CFR Part 4

RIN 2900–AJ60

Schedule for Rating Disabilities; The Spine

AGENCY: Department of Veterans Affairs.

ACTION: Final rule.

SUMMARY: This document amends the Department of Veterans Affairs (VA) Schedule for Rating Disabilities by revising that portion of the Musculoskeletal System that addresses disabilities of the spine. The intended effect of this action is to update this portion of the rating schedule to ensure that it uses current medical terminology and unambiguous criteria, and that it reflects medical advances that have occurred since the last review.

DATES: *Effective Date:* This amendment is effective September 26, 2003.

FOR FURTHER INFORMATION CONTACT: Audrey Tomlinson, Medical Officer, Policy and Regulations Staff (211A), Compensation and Pension Service, Veterans Benefits Administration, Department of Veterans Affairs, 810 Vermont Ave., NW., Washington, DC 20420, (202) 273–7215.

SUPPLEMENTARY INFORMATION: VA has amended its Schedule for Rating Disabilities, 38 CFR part 4, by revising that portion of the Musculoskeletal System that addresses disabilities of the spine. The intended effect of this action is to update this portion of the rating schedule to ensure that it uses current medical terminology and unambiguous criteria, and that it reflects medical advances that have occurred since the last review. VA published a notice of proposed rulemaking in the **Federal Register** on September 4, 2002 (67 FR 56509). Interested persons were invited to submit written comments on or before November 4, 2002. We received comments from two commenters, one from the Disabled American Veterans, and one from a VA employee.

We proposed to evaluate spine disabilities under a General Rating Formula for Diseases and Injuries of the Spine that included the following introductory language: ''With symptoms such as pain (whether or not it radiates), stiffness, or aching in the area of the spine affected by residuals of injury or disease''. One commenter felt that including this language does not allow raters to take into account the impairment that may result from asymptomatic residuals or sequelae of diseases or injury of the spine and also that the proposed rating formula would not recognize pain as disabling unless it is present in conjunction with ankylosis or limitation of motion, *etc.* The commenter went on to say that symptoms such as pain, stiffness, and aching should alone or in combination with each other warrant compensable ratings when severe enough to cause disability.

In response to this comment, we have changed the introductory language quoted above to ''With or without symptoms such as pain (whether or not it radiates), stiffness, or aching in the area of the spine affected by residuals of injury or disease''. Doing so removes the requirement that there be pain, stiffness, or aching in order to assign any evaluation under the General Rating Formula for Diseases and Injuries of the Spine. Pain alone cannot be evaluated without being associated with an underlying pathologic abnormality. In

the case of spine disabilities, it would be rare for pain not to be present. Pain is often the primary factor limiting motion, for example, and is almost always present when there is muscle spasm. Therefore, the evaluation criteria provided are meant to encompass and take into account the presence of pain, stiffness, or aching, which are generally present when there is a disability of the spine.

The prior schedule directed that a vertebral fracture that did not meet the criteria for a 60-percent or higher evaluation would be evaluated on the basis of limited motion or muscle spasm, with 10 percent added for demonstrable vertebral body deformity. Since the term ''demonstrable deformity'' was not defined, however, this provision was applied inconsistently. We proposed that a 10-percent evaluation be assigned for a vertebral body fracture with loss of 50 percent or more of the height. One commenter felt that this requirement was too stringent.

As we reported in the preamble to the proposed regulation, a recent medical textbook on disability evaluation states that vertebral fractures with loss of height of the vertebral body of 50-percent or less ordinarily do not require surgery, heal uneventfully, and are compatible with the resumption of normal activities after healing (''Disability Evaluation,'' 292–3 (Stephen L. Demeter, M.D., Gunnar B.J. Anderson, M.D., Ph.D., and George M. Smith, M.D., 1996)). Furthermore, should a vertebral body fracture with less than 50 percent loss of height prove to be disabling, it may be evaluated based on any specific disabling residuals that are present, such as pain or limitation of motion. In our judgment, the requirement that there be a loss of 50 percent or more of the height of a fractured vertebral body in order to assign a 10-percent evaluation based on deformity alone has a sound medical basis and will promote consistency, and we have made no change based on this comment.

One commenter felt that it is confusing and illogical to list the evaluation criteria for diagnostic codes 5235 to 5242 after diagnostic code 5243. In response, we have moved the General Rating Formula for Diseases and Injuries of the Spine to the beginning of the Spine subsection. For further clarity, we have added the title ''Formula for Rating Intervertebral Disc Syndrome Based on Incapacitating Episodes'' to the set of evaluation criteria under diagnostic code 5243 and explained that intervertebral disc syndrome may be evaluated under either rating formula, depending on which is more beneficial to the veteran. All other spine diseases and injuries will be evaluated under the General Rating Formula for Diseases and Injuries of the Spine.

We proposed that the language under diagnostic code 5243 be: ''Evaluate intervertebral disc syndrome (preoperatively or postoperatively) either on the total duration of incapacitating episodes over the past 12 months or by combining under § 4.25 evaluations under the General Rating Formula for Diseases and Injuries of the Spine along with evaluations for all other disabilities, whichever method results in the higher evaluation.'' A commenter felt that the proposed language was confusing and suggested that we revise it.

We agree that the language could be clearer and have revised it to read: ''Evaluate intervertebral disc syndrome (preoperatively or postoperatively) either under the General Rating Formula for Diseases and Injuries of the Spine or under the Formula for Rating Intervertebral Disc Syndrome Based on Incapacitating Episodes, whichever method results in the higher evaluation when all disabilities are combined under § 4.25.''

One commenter felt that painful motion, even if the range of motion is normal, should be one of the criteria for a 10-percent evaluation because usually any limitation of motion is due to pain, and we usually give 10 percent for pain on motion, under §§ 4.45 (The joints) and 4.59 (Painful motion).

As discussed above, we developed evaluation criteria that are meant to take pain and other symptoms into account. Therefore, an evaluation based on pain alone would not be appropriate, unless there is specific nerve root pain, for example, that could be evaluated under the neurologic sections of the rating schedule.

The same commenter said there is no need for criteria for a zero-percent evaluation, since § 4.31 (Zero percent evaluations) states that a zero percent evaluation can be assigned in any case when the requirements for a compensable evaluation are not met. On further consideration, and in view of other changes we have made in the General Rating Formula, we agree and have removed the zero-percent criteria.

The commenter also suggested that we add diagnostic codes for pyriformis syndrome, mechanical back pain due to poor posture, and neck strain to the rating schedule.

Pyriformis syndrome, often called pseudosciatica, is characterized by sciatica-like pain. It is regarded as a pain syndrome or a functional syndrome because there is no demonstrable pathology to account for the symptoms. It is a controversial diagnosis because there is no agreement on how to diagnose it, and there is no way to confirm the diagnosis by testing. We have not added this to the rating schedule because its diagnosis is controversial and uncertain.

Section 4.40 indicates that functional loss of the musculoskeletal system may be due to pain when it is supported by adequate pathology. The diagnosis of mechanical back pain is a broad general diagnosis that does not identify an underlying pathologic process to account for the pain. Most mechanical back pain (70%) is due to lumbar strain or sprain, with 10% due to degenerative changes in discs and facets, 4% due to herniated discs, 4% due to osteoporotic compression fractures, and 3% due to spinal stenosis. (*http://www.emedicine.com/pmr/topic73.htm*). Examiners should be asked to identify the underlying pathologic process causing back pain, and evaluations can then be made under the appropriate diagnostic codes for spine disabilities that are listed in the rating schedule.

We agree that neck strain is a common disability in veterans and have therefore revised the title of diagnostic code 5237 to ''Lumbosacral or cervical strain''. We have also revised the heading of the General Rating Formula for Diseases and Injuries of the Spine accordingly.

One commenter suggested we add a note explaining when to use diagnostic code 5320 (for muscle injury of Group XX muscles (spinal muscles)) rather than 5237 (lumbosacral or cervical strain).

In our judgment, such a note is unnecessary. Diagnostic code 5320 is primarily used for evaluating muscle injuries due to wounds caused by gunshots or other missiles, as § 4.56 (Evaluation of muscle disabilities) indicates. Lumbosacral and cervical strain do not stem from wounds but mainly from work or recreational injuries that involve sudden twisting, overuse, improper lifting, etc., sometimes superimposed on mechanical problems such as obesity, postural defects, or anatomical defects (*http://users.rowan.edu*, The Merck Manual (17th edition 1999, page 504), *http://www.bonetumour.org/book, http://www.emedicine.com/sports/topic69.htm*). Muscle strains are, therefore, most appropriately evaluated under diagnostic code 5237 (lumbosacral and cervical strain).

VA appreciates the comments submitted in response to the proposed rule. Based on the rationale stated in the proposed rule and in this document, the

proposed rule is adopted with the changes noted.

Paperwork Reduction Act

This document contains no provisions constituting a collection of information under the Paperwork Reduction Act (44 U.S.C. 3501–3521).

Regulatory Flexibility Act

The Secretary hereby certifies that this regulatory amendment will not have a significant economic impact on a substantial number of small entities as they are defined in the Regulatory Flexibility Act (RFA), 5 U.S.C. 601–612. The reason for this certification is that this amendment would not directly affect any small entities. Only VA beneficiaries could be directly affected. Therefore, pursuant to 5 U.S.C. 605(b), this amendment is exempt from the initial and final regulatory flexibility analysis requirements of sections 603 and 604.

Executive Order 12866

This regulatory amendment has been reviewed by the Office of Management and Budget under the provisions of Executive Order 12866, Regulatory Planning and Review, dated September 30, 1993.

Unfunded Mandates

The Unfunded Mandates Reform Act requires, at 2 U.S.C. 1532, that agencies prepare an assessment of anticipated costs and benefits before developing any rule that may result in an expenditure by State, local, or tribal governments, in the aggregate, or by the private sector of $100 million or more in any given year. This amendment would have no such effect on State, local, or tribal governments, or the private sector.

The Catalog of Federal Domestic Assistance program numbers are 64.104 and 64.109.

List of Subjects in 38 CFR Part 4

Disability benefits, Individuals with disabilities, Pensions, Veterans.

Approved: June 12, 2003.

Anthony J. Principi,

Secretary of Veterans Affairs.

■ For the reasons set out in the preamble, 38 CFR part 4, subpart B, is amended as set forth below:

PART 4—SCHEDULE FOR RATING DISABILITIES

Subpart B—Disability Ratings

■ 1. The authority citation for part 4 continues to read as follows:

Authority: 38 U.S.C. 1155, unless otherwise noted.

■ 2. In § 4.71a, the table ''The Spine'' is revised and is transferred so that it precedes the table ''The Hip and Thigh'; and Plate V is added immediately following the table ''The Spine'', to read as follows:

§ 4.71a Schedule of ratings—musculoskeletal system.

* * * * *

THE SPINE

	Rating
General Rating Formula for Diseases and Injuries of the Spine	
(For diagnostic codes 5235 to 5243 unless 5243 is evaluated under the Formula for Rating Intervertebral Disc Syndrome Based on Incapacitating Episodes):	
With or without symptoms such as pain (whther or not it radiates), stiffness, or aching in the area of the spine affected by residuals of injury or disease	
Unfavorable ankylosis of the entire spine	100
Unfavorable ankylosis of the entire thoracolumbar spine	50
Unfavorable ankylosis of the entire cervical spine; or, forward flexion of the thoracolumbar spine 30 degrees or less; or, favorable ankylosis of the entire thoracolumbar spine	40
Forward flexion of the cervical spine 15 degrees or less; or, favorable ankylosis of the entire cervical spine	30
Forward flexion of the thoracolumbar spine greater than 30 degrees but not greater than 60 degrees; or, forward flexion of the cervical spine greater than 15 degrees but not greater than 30 degrees; or, the combined range of motion of the thoracolumbar spine not greater than 120 degrees; or, the combined range of motion of the cervical spine not greater than 170 degrees; or, muscle spasm or guarding severe enough to result in an abnormal gait or abnormal spinal contour such as scoliosis, reversed lordosis, or abnormal kyphosis	20
Forward flexion of the thoracolumbar spine greater than 60 degrees but not greater than 85 degrees; or, forward flexion of the cervical spine greater than 30 degrees but not greater than 40 degrees; or, combined range of motion of the thoracolumbar spine greater than 120 degrees but not greater than 235 degrees; or, combined range of motion of the cervical spine greater than 170 degrees but not greater than 335 degrees; or, muscle spasm, guarding, or localized tenderness not resulting in abnormal gait or abnormal spinal contour; or, vertebral body fracture with loss of 50 percent or more of the height	10
Note (1): Evaluate any associated objective neurologic abnormalities, including, but not limited to, bowel or bladder impairment, separately, under an appropriate diagnostic code.	
Note (2): (See also Plate V.) For VA compensation purposes, normal forward flexion of the cervical spine is zero to 45 degrees, extension is zero to 45 degrees, left and right lateral flexion are zero to 45 degrees, and left and right lateral rotation are zero to 80 degrees. Normal forward flexion of the thoracolumbar spine is zero to 90 degrees, extension is zero to 30 degrees, left and right lateral flexion are zero to 30 degrees, and left and right lateral rotation are zero to 30 degrees. The combined range of motion refers to the sum of the range of forward flexion, extension, left and right lateral flexion, and left and right rotation. The normal combined range of motion of the cervical spine is 340 degrees and of the thoracolumbar spine is 240 degrees.The normal ranges of motion for each component of spinal motion provided in this note are the maximum that can be used for calculation of the combined range of motion.	
Note (3): In exceptional cases, an examiner may state that because of age, body habitus, neurologic disease, or other factors not the result of disease or injury of the spine, the range of motion of the spine in a particular individual should be considered normal for that individual, even though it does not conform to the normal range of motion stated in Note (2). Provided that the examiner supplies an explanation, the examiner's assessment that the range of motion is normal for that individual will be accepted.	
Note (4): Round each range of motion measurement to the nearest five degrees.	

THE SPINE—Continued

	Rating
Note (5): For VA compensation purposes, unfavorable ankylosis is a condition in which the entire cervical spine, the entire thoracolumbar spine, or the entire spine is fixed in flexion or extension, and the ankylosis results in one or more of the following: difficulty walking because of a limited line of vision; restricted opening of the mouth and chewing; breathing limited to diaphragmatic respiration; gastrointestinal symptoms due to pressure of the costal margin on the abdomen; dyspnea or dysphagia; atlantoaxial or cervical subluxation or dislocation; or neurologic symptoms due to nerve root stretching. Fixation of a spinal segment in neutral position (zero degrees) always represents favorable ankylosis.	
Note (6): Separately evaluate disability of the thoracolumbar and cervical spine segments, except when there is unfavorable ankylosis of both segments, which will be rated as a single disability.	
5235 Vertebral fracture or dislocation	
5236 Sacroiliac injury and weakness	
5237 Lumbosacral or cervical strain	
5238 Spinal stenosis	
5239 Spondylolisthesis or segmental instability	
5240 Ankylosing spondylitis	
5241 Spinal fusion	
5242 Degenerative arthritis of the spine (see also diagnostic code 5003)	
5243 Intervertebral disc syndrome	
Evaluate intervertebral disc syndrome (preoperatively or postoperatively) either under the General Rating Formula for Diseases and Injuries of the Spine or under the Formula for Rating Intervertebral Disc Syndrome Based on Incapacitating Episodes, whichever method results in the higher evaluation when all disabilities are combined under § 4.25.	
Formula for Rating Intervertebral Disc Syndrome Based on Incapacitating Episodes	
With incapacitating episodes having a total duration of at least 6 weeks during the past 12 months	60
With incapacitating episodes having a total duration of at least 4 weeks but less than 6 weeks during the past 12 months	40
With incapacitating episodes having a total duration of at least 2 weeks but less than 4 weeks during the past 12 months	20
With incapacitating episodes having a total duration of at least one week but less than 2 weeks during the past 12 months	10

BILLING CODE 8320–01–P

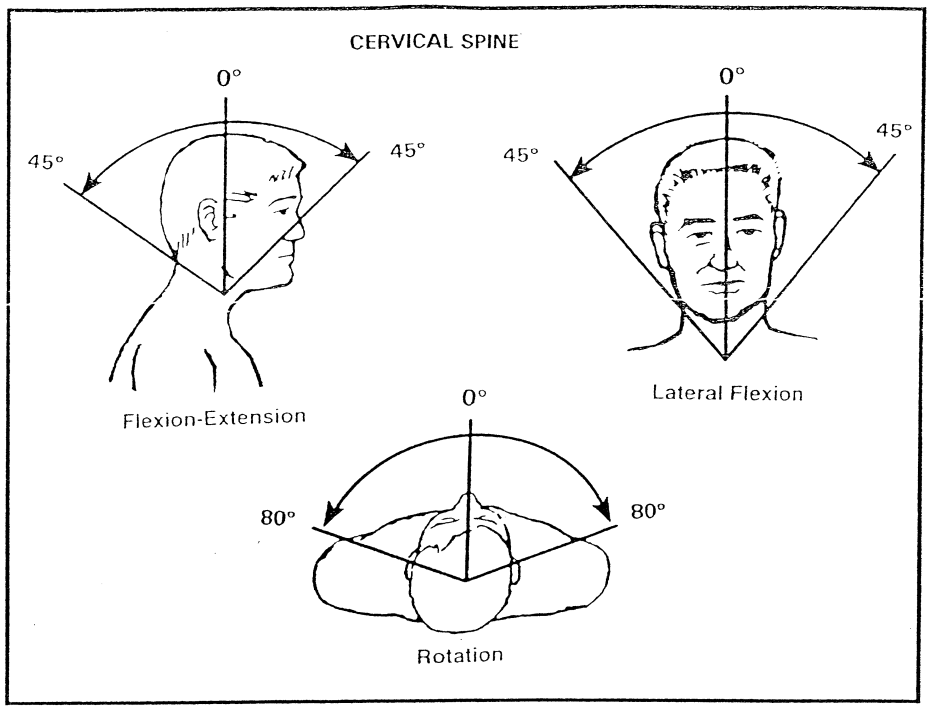

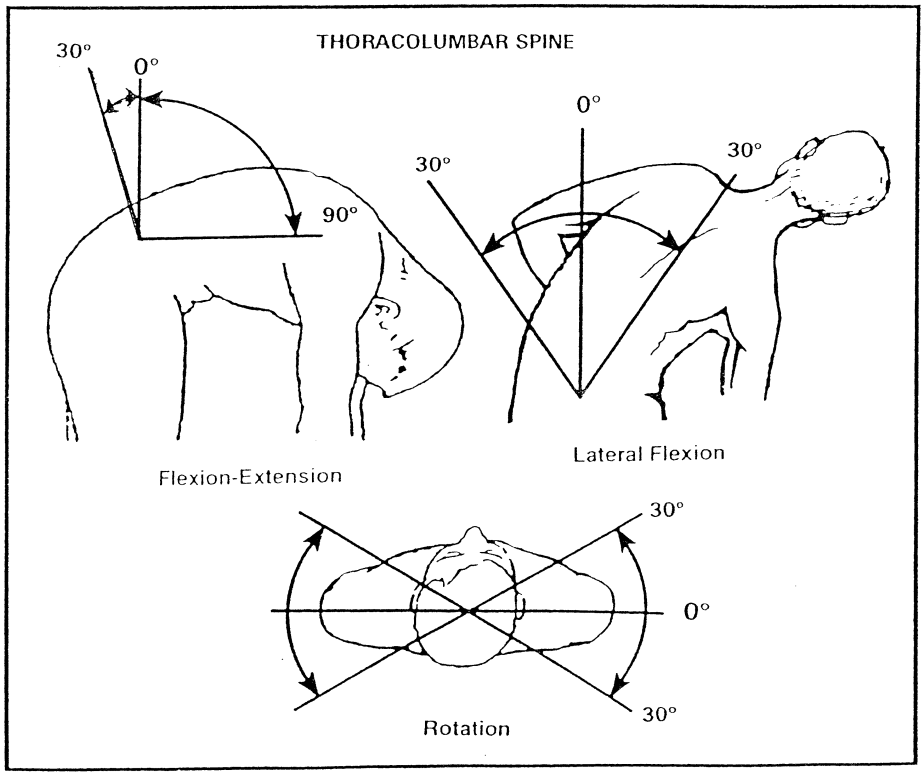

PLATE V
RANGE OF MOTION OF CERVICAL AND THORACOLUMBAR SPINE

[FR Doc. 03–21839 Filed 8–26–03; 8:45 am]
BILLING CODE 8320–01–C

ENVIRONMENTAL PROTECTION AGENCY

40 CFR Parts 52 and 81

[WV061–6031a; FRL–7549–1]

Approval and Promulgation of Air Quality Implementation Plans; West Virginia; Redesignation of the Follansbee PM_{10} Nonattainment Area To Attainment and Approval of the Associated Maintenance Plan

AGENCY: Environmental Protection Agency (EPA).

ACTION: Direct final rule.

SUMMARY: EPA is taking direct final action to approve a request from the State of West Virginia to redesignate the Follansbee area of Brooke County, West Virginia (Follansbee area) from nonattainment to attainment for the national ambient air quality standards (NAAQS) for particulate matter with an aerodynamic diameter less than or equal to a nominal 10 microns (PM_{10}). EPA is also approving the plan for maintaining the PM_{10} standard in the Follansbee area and contingency measures as revisions to the West Virginia State Implementation Plan (SIP). Approval of the maintenance plan will put a plan in place for maintaining the PM_{10} standard for the next ten years in the Follansbee area. EPA is approving the redesignation request, the maintenance plan and the contingency measures in accordance with the requirements of the Clean Air Act (CAA).

DATES: This rule is effective on October 27, 2003 without further notice, unless EPA receives adverse written comment by September 26, 2003. If EPA receives such comments, it will publish a timely withdrawal of the direct final rule in the **Federal Register** and inform the public that the rule will not take effect.

ADDRESSES: Comments may be submitted either by mail or electronically. Written comments should be mailed to Makeba Morris, Chief, Air Quality Planning Branch, Mailcode 3AP21, U.S. Environmental Protection Agency, Region III, 1650 Arch Street, Philadelphia, Pennsylvania 19103. Electronic comments should be sent either to *morris.makeba@epa.gov* or to *http://www.regulations.gov*, which is an alternative method for submitting electronic comments to EPA. To submit comments, please follow the detailed instructions described in Part V of the Supplementary Information section. Copies of the documents relevant to this action are available for public inspection during normal business hours at the Air Protection Division, U.S. Environmental Protection Agency, Region III, 1650 Arch Street, Philadelphia, Pennsylvania 19103; the Air and Radiation Docket and Information Center, U.S. Environmental Protection Agency, 1301 Constitution Avenue, NW., Room B108, Washington, DC 20460; and West Virginia Department of Environmental Protection, Division of Air Quality, 7012 MacCorkle Avenue, SE., Charleston, West Virginia 25304–2943.

FOR FURTHER INFORMATION CONTACT: Ruth Knapp, (215) 814–2191, or by e-mail at *knapp.ruth@epa.gov.*

SUPPLEMENTARY INFORMATION: Throughout this document wherever ''we,'' ''us,'' or ''our'' is used we mean EPA.

Table of Contents

Introduction
I. Area Designated Nonattainment for PM_{10}
II. Geographic Boundaries of the PM_{10} Nonattainment Area
III. Criteria for Redesignation
IV. Analysis of How the State Met the Criteria for Redesignation
A. Data Shows Attainment of the PM_{10} NAAQS in the Follansbee Area
B. Fully Approved SIP Under Section 110(k) of the CAA
1. Section 110 Requirements
2. Part D Requirements
a. Subparts 1 and 4 of Part D—Sections 172(c) and 189(a) Provisions
b. Subpart 1 of Part D—Section 176 Conformity Provisions
C. The Improvement in Air Quality is Due to Permanent and Enforceable Measures
D. The Maintenance Plan Under Section 175A
1. Maintenance Plan Requirements
a. Emissions inventory
b. Maintenance demonstration
c. Commitment to continue monitoring air quality
d. Verification of continued attainment
e. Contingency plan
2. Commitment to Submit Subsequent Maintenance Plan Revisions
E. The Submittal Meets the Applicable Requirements of Section 110 and Part D
V. Final Action
VI. Statutory and Executive Order Reviews
A. General Requirements
B. Submission to Congress and the Comptroller General
C. Petitions for Judicial Review

Introduction

Under the CAA, EPA may redesignate areas to attainment if sufficient data are available to warrant such changes and the area meets the criteria contained in section 107(d)(3) of the Act. This includes full approval of a maintenance plan for the area. EPA may approve a maintenance plan which meets the requirements of section 175A of the CAA. On May 12, 2003, the State of West Virginia submitted a redesignation request and maintenance plan for the Follansbee PM_{10} moderate nonattainment area. When approved, the section 175A maintenance plan will become a Federally enforceable part of the West Virginia SIP for this area.

I. Area Designated Nonattainment for PM_{10}

On November 15, 1990, the Clean Air Act (CAA) amendments were enacted. Pursuant to section 107(d)(4)(B), the Follansbee area in Brooke County, West Virginia was designated nonattainment by operation of law. The nonattainment classification and designation of Follansbee as a moderate PM_{10} area was codified in 40 CFR part 81 on November 6, 1991 (56 FR 56848). Prior to enactment of the CAA amendments this area along with a portion of Jefferson County, Ohio near Steubenville was classified as a single Group I PM_{10} nonattainment area. Under the 1990 CAA amendments, these two adjacent areas were each designated by operation of law as nonattainment areas. Although the State of West Virginia and the State of Ohio worked together to provide an attainment demonstration for both the Follansbee, West Virginia nonattainment area and the Jefferson County, Ohio nonattainment area, each area is treated separately for purposes of redesignation. Specific information on the Jefferson County, Ohio area's redesignation to attainment can be found in EPA's approval of the State of Ohio's redesignation request and maintenance plan for Jefferson County. (*See* December 11, 2000, 65 FR 77308).

II. Geographic Boundaries of the PM_{10} Nonattainment Area

The Follansbee PM_{10} nonattainment area in Brooke County, West Virginia is bounded on the north by the Market Street Bridge, on the east by West Virginia Route 2, on the south by the extension of the southern boundary of Steubenville Township in Jefferson County, Ohio, and on the west by the Ohio/West Virginia border.

The adjacent Jefferson County, Ohio area is bounded by Market Street (State Route 43) from the West Virginia /Ohio border west to Sunset Boulevard (U.S. Route 22), Sunset Boulevard west to the Steubenville Township /Cross Creek Township boundary, the Township boundary south to the Steubenville Corporation limit, the corporation boundary east to State Route 7, State Route 7 South to the Steubenville Township /Wells Township boundary, the Township boundary east to the West Virginia Ohio border, and North on the border to Market Street.

III. Criteria for Redesignation

Section 107(d)(3)(E) of the CAA specifies five requirements that must be met to redesignate an area from nonattainment to attainment as follows:

1. The area has attained the applicable NAAQS;
2. The area has a fully approved SIP under section 110(k);
3. The air quality improvement is permanent and enforceable;
4. The area has a fully approved maintenance plan pursuant to section 175A; and
5. The area has met all relevant requirements under section 110 and part D of the Act.

IV. Analysis of How the State Met the Criteria for Redesignation

The EPA has reviewed the redesignation request submitted by West Virginia for the Follansbee nonattainment area and finds that the request meets the five requirements of section 107(d)(3)(E).

A. Data Shows Attainment of the PM_{10} NAAQS in the Follansbee Area

For purposes of assessing air quality, monitoring data in both West Virginia and Ohio was reviewed. The monitor in Brooke County, West Virginia has always been located outside the boundary of the nonattainment area but is included in the review to provide an overall picture of air quality in the area. Three monitors are currently operating in the Jefferson County, Ohio area previously described in section II entitled, Geographic Boundaries. The redesignation request is based upon the three most recent years of quality-assured PM_{10} air monitoring data (1999–2001) available during preparation of the May 12, 2003 submittal. The PM_{10} NAAQS includes both a daily and an annual standard. An area is attaining the daily and annual NAAQS if there are no violations, as determined in accordance with 40 CFR 50.6 and appendix K, based upon three complete consecutive calendar years of quality assured monitoring data. The daily standard is met if the expected frequency of values above 150 ug/m^3 is 1.0 or less. The data must be collected and quality assured in accordance with 40 CFR part 58, and recorded in the Aerometric Information Retrieval System (AIRS) now known as the Air Quality System (AQS).

West Virginia's formal submittal included data from 1990 through 2002. This data shows that the area has not recorded any exceedances of the daily NAAQS in the past decade. The formal redesignation request is based upon data from 1999 through 2001. This data has been quality assured and recorded in AQS. During the 1999 through 2001 time period, there were no actual exceedances of the daily standard, and the average number of expected exceedances is less than 1.0 for the same time period. During 2002, no exceedances were recorded. Therefore, the area has attained and continues to attain the daily NAAQS. During 1999 through 2002 the maximum annual average recorded at these sites was 35 ug/m3. As the annual standard is based on the average annual mean over three years, the area has attained and continues to attain the annual PM_{10} standard. Since the area has attained the daily and annual NAAQS based upon the most recent three years of quality-assured data available during preparation of the May 12, 2003 submittal, and continues to attain the NAAQS, the first criterion of section 107(d)(3)(E) has been satisfied. West Virginia has committed to continue monitoring in Brooke County in accordance with 40 CFR parts 53 and 58.

B. Fully Approved SIP Under Section 110(k) of the CAA

1. Section 110 Requirements

On November 15, 1991, West Virginia submitted an attainment plan to EPA consisting of an attainment demonstration and control measures for the Follansbee area. On July 25, 1994 (59 FR 37696) EPA took a limited approval/limited disapproval action on the submittal. EPA fully approved the control measures portion of the plan, but disapproved the attainment demonstration and took no action on the contingency measures with specific regard to section 172(c)(9) of the CAA. On November 22, 1995, West Virginia submitted a revised attainment demonstration, and EPA approved that attainment demonstration on November 15, 1996 (61 FR 58481) but did not take action on the contingency measures. In this rulemaking, EPA is approving the contingency measures submitted on November 15, 1991 as fulfilling the requirements of section 172(c)(9). Therefore, EPA fully approved all applicable requirements of section 110(a)(2)(I) of the Act, including all applicable requirements of part D (relating to nonattainment), which were due prior to the time of the redesignation request.

2. Part D Requirements

Part D of the CAA contains general provisions that apply to all nonattainment plans and certain sections that apply to specific pollutants. Before EPA may redesignate the Follansbee PM_{10} nonattainment area to attainment, the SIP must have fulfilled the applicable requirements of part D. Under part D, an area's classification indicates the requirements to which it is subject. Subpart 1 of part D sets forth the basic nonattainment requirements applicable to all nonattainment areas. EPA designated the Follansbee area of Brooke County as a moderate PM_{10} nonattainment area on November 6, 1991 (codified at 40 CFR 81.339). Therefore, to be redesignated to attainment, the area must meet the applicable requirements of subpart 1 of part D, specifically sections 172(c) and 176. Section 189(a) of subpart 4 of the CAA also must be met.

a. Subparts 1 and 4 of Part D—Sections 172(c) and 189(a) Provisions

Subpart 1 of part D addresses nonattainment areas in general and subpart 4 addresses PM_{10} nonattainment areas specifically. Except for contingency measures, all the relevant SIP elements required under sections 172(c) and 189(a) including an emissions inventory, Reasonably Available Control Measures (RACM); and an attainment demonstration were approved by EPA on July 25, 1994 (59 FR 37696) and, November 15, 1996 (61 FR 58481). Although contingency measures were contained in consent orders that were fully approved and incorporated into the West Virginia SIP by EPA on July 25, 1994 (59 FR 37696), our approval did not specifically take action to approve them as contingency measures pursuant to section 172(c)(9) at that time. However, as the consent orders' requirements were made part of the Federally approved SIP, if the area had not reached attainment, the additional reductions from these measures would have been implemented. Within 365 days of receiving notice that attainment had not been achieved, the following sources would have implemented additional PM_{10} emission reductions: Follansbee Steel would have obtained additional PM_{10} actual reductions of 0.22 lbs/hr and 0.96 tpy; Wheeling Pittsburgh Steel would have achieved additional actual reductions of 6.5 lbs/hr and 28.5 tpy; International Mill Services would have obtained actual reductions of 0.1 lbs/hr and 0.4 tpy; and Koppers Industries would add additional dust control on access roads. Since the area did attain the standard, these measures were not triggered. Given that the Follansbee area did attain the standard and is being redesignated to attainment, it may be argued that the need for EPA to approve these SIP-approved measures as contingency measures specifically

pursuant to section 172(c)(9) is moot. Nonetheless, EPA is now approving these measures as meeting the criteria of section 172(c)(9) for contingency measures in order to be clear that the area has a full approved plan for all applicable Part D requirements. The Federal requirements for new source review (NSR) in nonattainment areas are contained in section 172(c)(5). EPA guidance indicates the requirements of the part D NSR program will be replaced by the prevention of significant deterioration (PSD) program when an area has reached attainment and been redesignated, provided there are assurances that PSD will become fully effective immediately upon redesignation. Regulations for the Prevention of Significant Deterioration of Air Quality were approved into the West Virginia SIP on April 11, 1986 (51 FR 12518). Therefore, the PSD program will become fully effective in the Follansbee area immediately upon redesignation.

b. Subpart 1 of Part D—Section 176 Conformity Provisions

The Follansbee area was not required to have a transportation conformity budget for PM_{10}. The most significant causes of nonattainment in this area were emissions from steel and industrial facilities in the area and not mobile source emissions. PM_{10} emissions from public roads contributed 5% or less to the ambient impacts of PM_{10} in the Follansbee area. Because the PM_{10} violations had been caused by stationary sources and motor vehicles were not an important contributor to the nonattainment problem, no additional quantitative analysis for transportation related PM_{10} impacts are required for conformity purposes. While section 176 provides that a State's conformity revisions must be consistent with Federal Conformity regulations promulgated by EPA, given the nature of the area's former nonattainment problem, it is reasonable to interpret those conformity requirements as not applying for purposes of evaluating the redesignation request.

C. The Improvement in Air Quality Due to Permanent and Enforceable Measures

In order to redesignate an area, EPA must determine that the improvement in air quality is due to permanent and enforceable reductions in emissions resulting from implementation of the applicable SIP, applicable Federal air pollutant control regulations and other permanent and enforceable reductions. The State's approved 1991 PM_{10} SIP for the Follansbee area identified the measures to bring the area into attainment. These measures included emission standards and operating restrictions for various sources of PM_{10}. The facilities that were required to implement additional controls were Follansbee Steel Corporation, International Mill Services, Koppers Industries, Standard Lafarge, Starvaggi Industries Incorporated, and Wheeling Pittsburgh Steel Corporation. All of these facilities received reduced allowable emission rates for PM_{10}. All of these sources except for Follansbee Steel Corporation were required to implement new or improved dust control measures. Both Follansbee Steel and Koppers Industries were required to implement ''add-on'' control equipment to reduce process PM_{10} emissions.

In addition to these emission reductions, other reductions have occurred since the attainment demonstration inventory was prepared and the modeled demonstration of attainment was performed. The sinter plant at Wheeling Pittsburgh Steel shutdown in 1999 and operations at International Mill Services have also shutdown. The additional emission reductions resulting from these shutdowns are permanent and enforceable given that any reactivation of these facilities would be subject to applicable new source review requirements.

The May 12, 2003 redesignation request demonstrates that actual enforceable emission reductions are responsible for the air quality improvements in the Follansbee area. EPA finds that emission reductions due to the control measures and emission limitations imposed by the SIP-approved 1991 attainment plan and emission reductions due to permanent and enforceable shutdowns have reduced the ambient PM_{10} levels such that the Follansbee area attained the NAAQS and continues to attain the NAAQS.

D. The Maintenance Plan Under Section 175A

Section 175A of the Act sets forth the necessary elements of a maintenance plan needed for areas seeking redesignation from nonattainment to attainment. The plan must demonstrate continued attainment of the applicable NAAQS for at least 10 years after the EPA approves a redesignation to attainment. Eight years after the redesignation, West Virginia must submit a revised maintenance plan which demonstrates attainment for the 10 years following the initial 10-year period. To address potential future NAAQS violations, the maintenance plan must contain contingency measures, with a schedule for implementation adequate to assure prompt correction of any air quality problems. Under section 175A(d), contingency provisions must include a requirement that the State will implement all control measures that were in the SIP prior to redesignation as an attainment area. EPA is approving the maintenance plan for the Follansbee nonattainment area because EPA finds that the submittal meets the requirements of section 175A. The details of the maintenance plan requirements and how the submittal meets these requirements are detailed in the following paragraphs. A maintenance plan must contain the following elements.

(1) An emissions inventory reflective of PM_{10} emissions in the monitored attainment years;

(2) A maintenance demonstration which is expected to provide adequate assurance of maintenance over the initial 10-year period;

(3) A commitment to continue monitoring in the area;

(4) A method for verifying continued attainment; and

(5) A contingency plan with specific indicators or triggers for implementation of the plan.

1. Maintenance Plan Requirements

a. Emissions inventory

The maintenance plan indicates that the attainment inventory is the emission inventory used to perform the modeling demonstration of attainment and provides updates to that inventory for 2001 for sources in the Follansbee nonattainment area. Emissions have declined somewhat in the area due to the previously described shutdowns. Any future increases in emissions and/or significant changes to the stack configurations/parameters from those modeled in the attainment demonstration due to new or modifying stationary sources would be subject to new source review requirements including a demonstration that the NAAQS is protected.

b. Maintenance demonstration

Steel and industrial facilities were the main cause of nonattainment in the area. The attainment demonstration was based upon allowable emission levels for stationary sources impacting the nonattainment area. PM_{10} emissions from public on-road sources did not play a significant role in nonattainment and their impacts were less than 5% of the PM_{10} concentrations. Therefore, no conformity budgets are required for Brooke County. Population in the

incorporated area of Follansbee (which is larger than the nonattainment area) has increased slightly since 1990 and may experience a minor increase in population over the next ten years. However, population in Brooke County has been decreasing since 1990 and is expected to continue to decline over the next ten years. Manufacturing employment in the metropolitan area which includes Follansbee has been decreasing since 1994, and this decline in manufacturing is expected to continue for the next 10 years. As a result of these factors, PM_{10} emissions are expected to remain at or below the emission levels used to demonstrate attainment for the next 10 years. The area, therefore, is expected to maintain the PM_{10} NAAQS for the next 10 years as it has for the past 10 years. Moreover as noted previously, any future increases in emissions and/or significant changes to the stack configurations/parameters form those modeled in the attainment demonstration due to new or modifying stationary sources would be subject to new source review requirements including a demonstration that the NAAQS is protected.

c. Commitment to continue monitoring air quality

The maintenance plan includes commitments to continue to operate and maintain the monitor located in Follansbee, Brooke County in accordance with 40 CFR parts 53 and 58. Information regarding the State of Ohio's monitoring commitment can be found in EPA's notice approving the maintenance plan for Jefferson County on December 11, 2000 (65 FR 77308).

d. Verification of continued attainment

In addition to reviewing ambient monitoring data in the Follansbee area on annual basis to verify continued attainment, the State of West Virginia will continue to examine the air quality impact of any major new sources or modifications through its approved PSD program. New minor sources will also be evaluated to assure maintenance of the area. In addition the State will review their PM_{10} inventory every three years.

e. Contingency plan

The maintenance plan contingency measures consist of control measures on source material handling operations and/or potential fuel switching at fuel burning units. The State will track air quality data in the Follansbee area. Upon a determination that three exceedances of the PM_{10} standard have occurred within a three-year period, the State will notify subject companies that the potential for a violation exists. The companies must then prepare detailed action plans containing specific measures selected from the contingency measures for implementation in the event of a violation. These plans must be submitted to the West Virginia Department of Environmental Protection (WVDEP) within 6 months of notification that the potential for a violation exists, and the plan shall include an implementation timeline such that the final milestone of the plan calls for implementation of the measures no later than 18 months after the company is notified that a violation has occurred. Within 6 months of a violation, the State will enter into consent orders or a legislative rule to incorporate the specific measures and compliance deadlines in the action plans and these measures will be made federally enforceable.

2. Commitment To Submit Subsequent Maintenance Plan Revisions

A new maintenance plan must be submitted to EPA within eight years of the redesignation of the nonattainment area, as required by section 175(A)(b). This subsequent maintenance plan must constitute a SIP revision and provide for the maintenance of the PM_{10} NAAQS for a period of 10 years after the expiration of the initial 10 year maintenance period. The State commits to submit a SIP revision as required by section 175(A)(b).

E. The Submittal Meets the Applicable Requirements of Section 110 and Part D

General SIP elements are delineated in section 110(a)(2) of Title I, part A. These requirements include but are not limited to the following: submittal of a SIP that has been adopted by the state after reasonable notice and public hearing, provisions for establishment and operation of appropriate apparatus, methods, systems and procedures necessary to monitor ambient air quality, implementation of a permit program, provisions for part C, Prevention of Significant Deterioration (PSD), and part D, New Source Review (NSR) permit programs, criteria for stationary source emission control measures, monitoring and reporting, and provisions for public and local agency participation. For the purposes of redesignation, the West Virginia SIP was reviewed to ensure that all requirements under the amended CAA were satisfied through approved SIP provisions for the Follansbee nonattainment area. EPA has concluded that the Commonwealth's SIP for the Follansbee nonattainment area satisfies all of the section 110 SIP requirements of the CAA and that all applicable requirements of part D have been satisfied.

V. Final Action

EPA is approving West Virginia's request to redesignate the Follansbee PM_{10} nonattainment area to attainment because the State has complied with the requirements of section 107(d)(3)(E) of the CAA. In addition, EPA is approving the West Virginia's maintenance plan for the Follansbee area as a SIP revision because it meets the requirements of section 175A. Lastly, we are approving the contingency measures submitted in the November 15, 1991 submittal as meeting the criteria of section 172(c)(9). EPA has prepared a Technical Support Document (TSD) in support of this rulemaking. Copies are available upon request, from the person identified in the **FOR FUTHER INFORMATION CONTACT** section. EPA is publishing this rule without prior proposal because the Agency views this as a noncontroversial amendment and anticipates no adverse comments. However, in the ''Proposed Rules'' section of today's **Federal Register**, EPA is publishing a separate document that will serve as the proposal to approve the SIP revision if adverse comments are filed. This rule will be effective on October 27, 2003 without further notice unless EPA receives adverse comment by September 26, 2003. If EPA receives adverse comment, EPA will publish a timely withdrawal in the **Federal Register** informing the public that the rule will not take effect. EPA will address all public comments in a subsequent final rule based on the proposed rule. EPA will not institute a second comment period on this action. Any parties interested in commenting must do so at this time. Please note that if EPA receives adverse comment on an amendment, paragraph, or section of this rule and if that provision may be severed from the remainder of the rule, EPA may adopt as final those provisions of the rule that are not the subject of an adverse comment.

You may submit comments either electronically or by mail. To ensure proper receipt by EPA, identify the appropriate rulemaking identification number WV061–6031a in the subject line on the first page of your comment. Please ensure that your comments are submitted within the specified comment period. Comments received after the close of the comment period will be marked ''late.'' EPA is not required to consider these late comments.

A. *Electronically.* If you submit an electronic comment as prescribed below, EPA recommends that you

include your name, mailing address, and an e-mail address or other contact information in the body of your comment. Also include this contact information on the outside of any disk or CD ROM you submit, and in any cover letter accompanying the disk or CD ROM. This ensures that you can be identified as the submitter of the comment and allows EPA to contact you in case EPA cannot read your comment due to technical difficulties or needs further information on the substance of your comment. EPA's policy is that EPA will not edit your comment, and any identifying or contact information provided in the body of a comment will be included as part of the comment that is placed in the official public docket, and made available in EPA's electronic public docket. If EPA cannot read your comment due to technical difficulties and cannot contact you for clarification, EPA may not be able to consider your comment.

1. *E-mail.* Comments may be sent by electronic mail (e-mail) to *morris.makeba@epa.gov*, attention WV–061–6031a. EPA's e-mail system is not an ''anonymous access'' system. If you send an e-mail comment directly without going through *Regulations.gov*, EPA's e-mail system automatically captures your e-mail address. E-mail addresses that are automatically captured by EPA's e-mail system are included as part of the comment that is placed in the official public docket, and made available in EPA's electronic public docket.

2. *Regulations.gov.* Your use of *Regulations.gov* is an alternative method of submitting electronic comments to EPA. Go directly to *http://www.regulations.gov*, then select ''Environmental Protection Agency'' at the top of the page and use the ''go'' button. The list of current EPA actions available for comment will be listed. Please follow the online instructions for submitting comments. The system is an ''anonymous access'' system, which means EPA will not know your identity, e-mail address, or other contact information unless you provide it in the body of your comment.

3. *Disk or CD ROM.* You may submit comments on a disk or CD ROM that you mail to the mailing address identified in the **ADDRESSES** section of this document. These electronic submissions will be accepted in WordPerfect, Word or ASCII file format. Avoid the use of special characters and any form of encryption.

B. *By Mail.* Written comments should be addressed to the EPA Regional office listed in the **ADDRESSES** section of this document. For public commenters, it is important to note that EPA's policy is that public comments, whether submitted electronically or in paper, will be made available for public viewing at the EPA Regional Office, as EPA receives them and without change, unless the comment contains copyrighted material, CBI, or other information whose disclosure is restricted by statute. When EPA identifies a comment containing copyrighted material, EPA will provide a reference to that material in the version of the comment that is placed in the official public rulemaking file. The entire printed comment, including the copyrighted material, will be available at the Regional Office for public inspection.

Submittal of CBI Comments

Do not submit information that you consider to be CBI electronically to EPA. You may claim information that you submit to EPA as CBI by marking any part or all of that information as CBI (if you submit CBI on disk or CD ROM, mark the outside of the disk or CD ROM as CBI and then identify electronically within the disk or CD ROM the specific information that is CBI). Information so marked will not be disclosed except in accordance with procedures set forth in 40 CFR part 2.

In addition to one complete version of the comment that includes any information claimed as CBI, a copy of the comment that does not contain the information claimed as CBI must be submitted for inclusion in the official public regional rulemaking file. If you submit the copy that does not contain CBI on disk or CD ROM, mark the outside of the disk or CD ROM clearly that it does not contain CBI. Information not marked as CBI will be included in the public file and available for public inspection without prior notice. If you have any questions about CBI or the procedures for claiming CBI, please consult the person identified in the **FOR FURTHER INFORMATION CONTACT** section.

Considerations When Preparing Comments to EPA

You may find the following suggestions helpful for preparing your comments:

1. Explain your views as clearly as possible.
2. Describe any assumptions that you used.
3. Provide any technical information and/or data you used that support your views.
4. If you estimate potential burden or costs, explain how you arrived at your estimate.
5. Provide specific examples to illustrate your concerns.
6. Offer alternatives.
7. Make sure to submit your comments by the comment period deadline identified.
8. To ensure proper receipt by EPA, identify the appropriate regional file/rulemaking identification number in the subject line on the first page of your response. It would also be helpful if you provided the name, date, and **Federal Register** citation related to your comments.

VI. Statutory and Executive Order Reviews

A. General Requirements

Under Executive Order 12866 (58 FR 51735, October 4, 1993), this action is not a ''significant regulatory action'' and therefore is not subject to review by the Office of Management and Budget. For this reason, this action is also not subject to Executive Order 13211, ''Actions Concerning Regulations That Significantly Affect Energy Supply, Distribution, or Use'' (66 FR 28355, May 22, 2001). This action merely approves state law as meeting Federal requirements and imposes no additional requirements beyond those imposed by state law. Accordingly, the Administrator certifies that this rule will not have a significant economic impact on a substantial number of small entities under the Regulatory Flexibility Act (5 U.S.C. 601 *et seq.*). Because this rule approves pre-existing requirements under state law and does not impose any additional enforceable duty beyond that required by state law, it does not contain any unfunded mandate or significantly or uniquely affect small governments, as described in the Unfunded Mandates Reform Act of 1995 (Pub. L. 104–4). This rule also does not have tribal implications because it will not have a substantial direct effect on one or more Indian tribes, on the relationship between the Federal Government and Indian tribes, or on the distribution of power and responsibilities between the Federal Government and Indian tribes, as specified by Executive Order 13175 (65 FR 67249, November 9, 2000). This action also does not have Federalism implications because it does not have substantial direct effects on the States, on the relationship between the national government and the States, or on the distribution of power and responsibilities among the various levels of government, as specified in Executive Order 13132 (64 FR 43255, August 10, 1999). This action merely approves a state rule implementing a Federal standard, and does not alter the relationship or the distribution of power and responsibilities established in the Clean Air Act. This rule also is not subject to Executive Order 13045 ''Protection of Children From Environmental Health Risks and Safety Risks'' (62 FR 19885, April 23, 1997),

because it is not economically significant.

In reviewing SIP submissions, EPA's role is to approve State choices, provided that they meet the criteria of the Clean Air Act. In this context, in the absence of a prior existing requirement for the State to use voluntary consensus standards (VCS), EPA has no authority to disapprove a SIP submission for failure to use VCS. It would thus be inconsistent with applicable law for EPA, when it reviews a SIP submission, to use VCS in place of a SIP submission that otherwise satisfies the provisions of the Clean Air Act. Thus, the requirements of Section 12(d) of the National Technology Transfer and Advancement Act of 1995 (15 U.S.C. 272 note) do not apply. This rule does not impose an information collection burden under the provisions of the Paperwork Reduction Act of 1995 (44 U.S.C. 3501 *et seq.*).

B. Submission to Congress and the Comptroller General

The Congressional Review Act, 5 U.S.C. 801 *et seq.*, as added by the Small Business Regulatory Enforcement Fairness Act of 1996, generally provides that before a rule may take effect, the agency promulgating the rule must submit a rule report, which includes a copy of the rule, to each House of the Congress and to the Comptroller General of the United States. EPA will submit a report containing this rule and other required information to the U.S. Senate, the U.S. House of Representatives, and the Comptroller General of the United States prior to publication of the rule in the **Federal Register**. This rule is not a ''major rule'' as defined by 5 U.S.C. 804(2).

C. Petitions for Judicial Review

Under Section 307(b)(1) of the Clean Air Act, petitions for judicial review of this action must be filed in the United States Court of Appeals for the appropriate circuit by October 27, 2003. Filing a petition for reconsideration by the Administrator of this final rule does not affect the finality of this rule for the purposes of judicial review nor does it extend the time within which a petition for judicial review may be filed, and shall not postpone the effectiveness of such rule or action. This action, redesignating the Follansbee, Brooke County, West Virginia PM_{10} area to attainment and approval of the area's maintenance plan and contingency measures, may not be challenged later in proceedings to enforce its requirements. (*See* section 307(b)(2).)

List of Subjects

40 CFR Part 52

Environmental protection, Air pollution control, Incorporation by reference, Intergovernmental relations, Particulate matter, Reporting and recordkeeping requirements.

40 CFR Part 81

Air pollution control, National parks, Wilderness areas.

Dated: August 18, 2003.

Donald S. Welsh,

Regional Administrator, Region III.

■ 40 CFR Parts 52 and 81 are amended as follows:

PART 52—[AMENDED]

■ 1. The authority citation for Part 52 continues to read as follows:

Authority: 42 U.S.C. 7401 *et seq.*

Subpart XX—West Virginia

■ 2. Section 52.2520 is amended by adding paragraph (c)(54) to read as follows:

§ 52.2520 Identification of plan.

* * * * *

(c) * * *

(54) The PM_{10} Redesignation and Maintenance Plan for the Follansbee, West Virginia nonattainment area submitted by the West Virginia Department of Environmental Protection on May 12, 2003.

(i) Incorporation by reference.

(A) Letter of May 12, 2003 from the West Virginia Department of Environmental Protection transmitting the redesignation request and maintenance plan for the PM_{10} nonattainment area in the Follansbee area of Brooke County.

(B) Maintenance Plan for the Follansbee PM_{10} nonattainment area, effective April 28, 2003.

(ii) *Additional Material.*—Remainder of the May 12, 2003 State submittal pertaining to the revisions listed in paragraph (c)(54)(i) of this section.

§ 52.2522 [Amended]

■ 3. In § 52.2522 (Approval status), paragraph (d) is removed and reserved.

■ 4. Section 52.2526 is added to read as follows:

§ 52.2526 Control strategy: Particulate matter.

EPA approves West Virginia's November 15, 1991 SIP submittal for fulfilling the PM_{10}-specific requirement of part D for contingency measures required under section 172(c)(9) of the Clean Air Act applicable to the Follansbee, West Virginia PM_{10} nonattainment area.

PART 81—[AMENDED]

Subpart C—Section 107 Attainment Status Designations

■ 1. The authority citation for part 81 continues to read as follows:

Authority: 42 U.S.C. 7401 *et seq.*

■ 2. In § 81.349, the table for ''West Virginia—PM_{10}'' is amended by revising the entry for the Follansbee Area of Brooke County to read as follows:

§ 81.349 West Virginia.

* * * * *

WEST VIRGINIA—PM_{10}

Designated area	Designation		Classification	
	Date	Type	Date	Type
Brooke				
Follansbee area bounded on the north by the Market Street Bridge, on the east by West Virginia Route 2, on the south by the extension of the southern boundary of Steubenville Township in Jefferson County, Ohio, and on the west by the Ohio/West Virginia border.	October 27, 2003..	Attainment.		
* * * * * * *				

* * * * *

[FR Doc. 03–21910 Filed 8–26–03; 8:45 am]
BILLING CODE 6560–50–P

ENVIRONMENTAL PROTECTION AGENCY

40 CFR Part 180

[OPP–2003–0253; FRL–7319–4]

Flumioxazin; Pesticide Tolerances for Emergency Exemptions

AGENCY: Environmental Protection Agency (EPA).

ACTION: Final rule.

SUMMARY: This regulation establishes a time-limited tolerance for residues of flumioxazin in or on sweet potato, roots in connection with a crisis exemption declared by the State of Louisiana. This regulation establishes a maximum permissible level for residues of flumioxazin in this food commodity. The tolerance will expire and is revoked on June 30, 2006.

DATES: This regulation is effective August 27, 2003. Objections and requests for hearings, identified by docket ID number OPP–2003–0253, must be received on or before October 27, 2003.

ADDRESSES: Written objections and hearing requests may be submitted electronically, by mail, or through hand delivery/courier. Follow the detailed instructions as provided in Unit VII. of the **SUPPLEMENTARY INFORMATION**.

FOR FURTHER INFORMATION CONTACT: Libby Pemberton, Registration Division (7505C), Office of Pesticide Programs, Environmental Protection Agency, 1200 Pennsylvania Ave., NW., Washington, DC 20460–0001; telephone number: (703) 308–9364; e-mail address: *pemberton.libby@epa.gov.*

SUPPLEMENTARY INFORMATION:

I. General Information

A. Does this Action Apply to Me?

You may be potentially affected by this action if you a Federal or State government agency involved in administration of environmental quality programs. Potentially affected entities may include, but are not limited to:

- Federal or State Government Entity, (NAICS 9241), i.e., Departments of Agriculture, Environment, etc.

This listing is not intended to be exhaustive, but rather provides a guide for readers regarding entities likely to be affected by this action. Other types of entities not listed in this unit could also be affected. The North American Industrial Classification System (NAICS) codes have been provided to assist you and others in determining whether this action might apply to certain entities. If you have any questions regarding the applicability of this action to a particular entity, consult the person listed under **FOR FURTHER INFORMATION CONTACT**.

B. How Can I Get Copies of This Document and Other Related Information?

1. *Docket*. EPA has established an official public docket for this action under docket identification (ID) number OPP–2003–0253. The official public docket consists of the documents specifically referenced in this action, any public comments received, and other information related to this action. Although a part of the official docket, the public docket does not include Confidential Business Information (CBI) or other information whose disclosure is restricted by statute. The official public docket is the collection of materials that is available for public viewing at the Public Information and Records Integrity Branch (PIRIB), Rm. 119, Crystal Mall #2, 1921 Jefferson Davis Hwy., Arlington, VA. This docket facility is open from 8:30 a.m. to 4 p.m., Monday through Friday, excluding legal holidays. The docket telephone number is (703) 305–5805.

2. *Electronic access*. You may access this **Federal Register** document electronically through the EPA Internet under the ''**Federal Register**'' listings at *http://www.epa.gov/fedrgstr/*. A frequently updated electronic version of 40 CFR part 180 is available at *http://www.access.gpo.gov/nara/cfr/cfrhtml_00/Title_40/40cfr180_00.html*, a beta site currently under development.

An electronic version of the public docket is available through EPA's electronic public docket and comment system, EPA Dockets. You may use EPA Dockets at *http://www.epa.gov/edocket/* to submit or view public comments, access the index listing of the contents of the official public docket, and to access those documents in the public docket that are available electronically. Although not all docket materials may be available electronically, you may still access any of the publicly available docket materials through the docket facility identified in Unit I.B.1. Once in the system, select ''search,'' then key in the appropriate docket ID number.

II. Background and Statutory Findings

EPA, on its own initiative, in accordance with sections 408(e) and 408 (l)(6) of the Federal Food, Drug, and Cosmetic Act (FFDCA), 21 U.S.C. 346a, is establishing a tolerance for residues of the herbicide flumioxazin, 2-[7-fluoro-3,4-dihydro-3-oxo-4-(2-propynyl)-2H-1,4-benzoxazin-6-yl]-4,5,6,7-tetrahydro-1H-isoindole-1,3(2H)-dione, in or on sweet potato, roots at 0.02 parts per million (ppm). This tolerance will expire and is revoked on June 30, 2006. EPA will publish a document in the **Federal Register** to remove the revoked tolerance from the Code of Federal Regulations.

Section 408(l)(6) of the FFDCA requires EPA to establish a time-limited tolerance or exemption from the requirement for a tolerance for pesticide chemical residues in food that will result from the use of a pesticide under an emergency exemption granted by EPA under section 18 of FIFRA. Such tolerances can be established without providing notice or period for public comment. EPA does not intend for its actions on section 18 related tolerances to set binding precedents for the application of section 408 of the FFDCA and the new safety standard to other tolerances and exemptions. Section 408(e) of the FFDCA allows EPA to establish a tolerance or an exemption from the requirement of a tolerance on its own initiative, i.e., without having received any petition from an outside party.

Section 408(b)(2)(A)(i) of the FFDCA allows EPA to establish a tolerance (the legal limit for a pesticide chemical residue in or on a food) only if EPA determines that the tolerance is ''safe.'' Section 408(b)(2)(A)(ii) of the FFDCA defines ''safe'' to mean that ''there is a reasonable certainty that no harm will result from aggregate exposure to the pesticide chemical residue, including all anticipated dietary exposures and all other exposures for which there is reliable information.'' This includes exposure through drinking water and in residential settings, but does not include occupational exposure. Section 408(b)(2)(C) of the FFDCA requires EPA to give special consideration to exposure of infants and children to the pesticide chemical residue in establishing a tolerance and to ''ensure that there is a reasonable certainty that no harm will result to infants and children from aggregate exposure to the pesticide chemical residue. . . .''

Section 18 of the FIFRA authorizes EPA to exempt any Federal or State agency from any provision of FIFRA, if EPA determines that ''emergency conditions exist which require such exemption.'' This provision was not amended by the Food Quality Protection Act of 1996 (FQPA). EPA has established regulations governing such emergency exemptions in 40 CFR part 166.

III. Emergency Exemption for Flumioxazin on Sweet Potato, Roots and FFDCA Tolerances

Ineffectiveness of registered alternatives in controlling sedges, pigweeds, and other broadleaf weeds has allowed these weeds to flourish and become more problematic each year. Louisiana has declared a crisis exemption under FIFRA section 18 for the use of flumioxazin on sweet potato, roots for control of certain broadleaf weeds.

As part of its assessment of this emergency exemption, EPA assessed the potential risks presented by residues of flumioxazin in or on sweet potato, roots. In doing so, EPA considered the safety standard in section 408(b)(2) of the FFDCA, and EPA decided that the necessary tolerance under section 408(l)(6) of the FFDCA would be consistent with the safety standard and with FIFRA section 18. Consistent with the need to move quickly on the emergency exemption in order to address an urgent non-routine situation and to ensure that the resulting food is safe and lawful, EPA is issuing this tolerance without notice and opportunity for public comment as provided in section 408(l)(6) of the FFDCA. Although this tolerance will expire and is revoked on June 30, 2006, under section 408(l)(5) of the FFDCA, residues of the pesticide not in excess of the amounts specified in the tolerance remaining in or on sweet potato, roots after that date will not be unlawful, provided the pesticide is applied in a manner that was lawful under FIFRA, and the residues do not exceed a level that was authorized by this tolerance at the time of that application. EPA will take action to revoke this tolerance earlier if any experience with, scientific data on, or other relevant information on this pesticide indicate that the residues are not safe.

Because this tolerance is being approved under emergency conditions, EPA has not made any decisions about whether flumioxazin meets EPA's registration requirements for use on sweet potato, roots or whether a permanent tolerance for this use would be appropriate. Under these circumstances, EPA does not believe that this tolerance serves as a basis for registration of flumioxazin by a State for special local needs under FIFRA section 24(c). Nor does this tolerance serve as the basis for any State other than Louisiana to use this pesticide on this crop under section 18 of FIFRA without following all provisions of EPA's regulations implementing FIFRA section 18 as identified in 40 CFR part 166. For additional information regarding the emergency exemption for flumioxazin, contact the Agency's Registration Division at the address provided under **FOR FURTHER INFORMATION CONTACT**.

IV. Aggregate Risk Assessment and Determination of Safety

EPA performs a number of analyses to determine the risks from aggregate exposure to pesticide residues. For further discussion of the regulatory requirements of section 408 of the FFDCA and a complete description of the risk assessment process, see the final rule on Bifenthrin Pesticide Tolerances (62 FR 62961, November 26, 1997) (FRL–5754–7) .

Consistent with section 408(b)(2)(D) of the FFDCA, EPA has reviewed the available scientific data and other relevant information in support of this action. EPA has sufficient data to assess the hazards of flumioxazin and to make a determination on aggregate exposure, consistent with section 408(b)(2) of the FFDCA, for a time-limited tolerance for residues of flumioxazin in or on sweet potato, roots at 0.02 ppm. EPA's assessment of the dietary exposures and risks associated with establishing the tolerance follows.

A. Toxicological Endpoints

The dose at which no adverse effects are observed (the NOAEL) from the toxicology study identified as appropriate for use in risk assessment is used to estimate the toxicological endpoint. However, the lowest dose at which adverse effects of concern are identified (the LOAEL) is sometimes used for risk assessment if no NOAEL was achieved in the toxicology study selected. An uncertainty factor (UF) is applied to reflect uncertainties inherent in the extrapolation from laboratory animal data to humans and in the variations in sensitivity among members of the human population as well as other unknowns. An UF of 100 is routinely used, 10X to account for interspecies differences and 10X for intraspecies differences.

For dietary risk assessment (other than cancer) the Agency uses the UF to calculate an acute or chronic reference dose (acute RfD or chronic RfD) where the RfD is equal to the NOAEL divided by the appropriate UF (RfD = NOAEL/UF). Where an additional safety factor is retained due to concerns unique to the FQPA, this additional factor is applied to the RfD by dividing the RfD by such additional factor. The acute or chronic Population Adjusted Dose (aPAD or cPAD) is a modification of the RfD to accommodate this type of FQPA SF.

For non-dietary risk assessments (other than cancer) the UF is used to determine the level of concern (LOC). For example, when 100 is the appropriate UF (10X to account for interspecies differences and 10X for intraspecies differences) the LOC is 100. To estimate risk, a ratio of the NOAEL to exposures (margin of exposure (MOE) = NOAEL/exposure) is calculated and compared to the LOC.

The linear default risk methodology (Q*) is the primary method currently used by the Agency to quantify carcinogenic risk. The Q* approach assumes that any amount of exposure will lead to some degree of cancer risk. A Q* is calculated and used to estimate risk which represents a probability of occurrence of additional cancer cases (e.g., risk is expressed as 1×10^{-6} or one in a million). Under certain specific circumstances, MOE calculations will be used for the carcinogenic risk assessment. In this non-linear approach, a ''point of departure'' is identified below which carcinogenic effects are not expected. The point of departure is typically a NOAEL based on an endpoint related to cancer effects though it may be a different value derived from the dose response curve. To estimate risk, a ratio of the point of departure to exposure (MOE_{cancer} = point of departure/exposures) is calculated. A summary of the toxicological endpoints for flumioxazin used for human risk assessment is shown in the following Table 1:

TABLE 1.—SUMMARY OF TOXICOLOGICAL DOSES AND ENDPOINTS FOR FLUMIOXAZIN

Endpoint	Dose (mg/kg/day)	HIARC/FQPA determination	Conclusion
Acute Dietary	NOAEL = 3.0 UF = 100	Cardiac effects (interventricular septal defects) were seen in the oral developmental and supplemental prenatal studies in rats.	This risk assessment is required for the population subgroup Females 13–50. Acute RfD=0.03 mg/kg/day
Chronic Dietary	NOAEL = 2 UF = 100	Kidney effects were seen in males and anemia was seen in females in the 2-year toxicity study in rats.	This risk assessment is required. Chronic RfD =0.02 mg/kg/day.
FQPA Safety Factor	NA	Safety factor was retained because (1) there was evidence of increased susceptibility of fetuses exposed to flumioxazin by both the oral and dermal route in the prenatal developmental toxicity studies in rats, (2) there was evidence of increased susceptibility of young animals exposed to flumioxazin in the 2-generation reproduction toxicity in rats, and (3) there is concern for the severity of the effects in fetuses and young animals when compared to the maternal or parental animals.	10x Safety factor was retained aPAD=0.003 mg/kg/dy cPAD=0.002 mg/kg/dy
Carcinogenicity	NA	The HIARC determined that flumioxazin is ''not likely'' to be a human carcinogen (HIARC Memo, In Review).	A cancer risk assessment is not required.

B. Exposure Assessment

1. *Dietary exposure from food and feed uses.* Tolerances have been established (40 CFR 180.568) for the residues of flumioxazin, in or on peanuts and soybean seed. Risk assessments were conducted by EPA to assess dietary exposures from flumioxazin in food as follows:

i. *Acute exposure.* Acute dietary risk assessments are performed for a food-use pesticide if a toxicological study has indicated the possibility of an effect of concern occurring as a result of a one day or single exposure. The Dietary Exposure Evaluation Model (DEEM®) analysis evaluated the individual food consumption as reported by respondents in the USDA 1994–1996 and 1998 nationwide Continuing Surveys of Food Intake by Individuals (CSFII) and accumulated exposure to the chemical for each commodity. The following assumptions were made for the acute exposure assessments: For this acute analysis the assumption was made that 100% of the crops with flumioxazin tolerances are treated with flumioxazin. In addition, the assumption was made that all commodities contain tolerance level residues when consumed, with the exception of those with default processing factors. Default processing factors were used for peanuts-butter (1.89x) and for soybeans-sprouted seeds (0.33x). As the exposure and risk estimates were low, no further refinements were made to this analysis.

ii. *Chronic exposure.* In conducting this chronic dietary risk assessment the DEEM® analysis evaluated the individual food consumption as reported by respondents in the USDA 1994–1996 and 1998 nationwide CSFII and accumulated exposure to the chemical for each commodity. The following assumptions were made for the chronic exposure assessments: For this chronic analysis the assumption was made that 100% of the crops with flumioxazin tolerances are treated with flumioxazin. In addition, the assumption was made that all commodities contain tolerance level residues when consumed, with the exception of those with default processing factors. Default processing factors were used for peanuts-butter (1.89x) and for soybeans-sprouted seeds (0.33x). As the exposure and risk estimates were low, no further refinements were made to this analysis.

2. *Dietary exposure from drinking water.* The Agency lacks sufficient monitoring exposure data to complete a comprehensive dietary exposure analysis and risk assessment for flumioxazin in drinking water. Because the Agency does not have comprehensive monitoring data, drinking water concentration estimates are made by reliance on simulation or modeling taking into account data on the physical characteristics of flumioxazin.

The Agency uses the Generic Estimated Environmental Concentration (GENEEC) or the Pesticide Root Zone/Exposure Analysis Modeling System (PRZM/EXAMS) to estimate pesticide concentrations in surface water and Screening Concentration in Ground Water Modeling System (SCI-GROW), which predicts pesticide concentrations in ground water. In general, EPA will use GENEEC (a tier 1 model) before using PRZM/EXAMS (a tier 2 model) for a screening-level assessment for surface water. The GENEEC model is a subset of the PRZM/EXAMS model that uses a specific high-end runoff scenario for pesticides. GENEEC incorporates a farm pond scenario, while PRZM/EXAMS incorporate an index reservoir environment in place of the previous pond scenario. The PRZM/EXAMS model includes a percent crop area factor as an adjustment to account for the maximum percent crop coverage within a watershed or drainage basin.

None of these models include consideration of the impact processing (mixing, dilution, or treatment) of raw water for distribution as drinking water would likely have on the removal of pesticides from the source water. The primary use of these models by the Agency at this stage is to provide a coarse screen for sorting out pesticides for which it is highly unlikely that drinking water concentrations would ever exceed human health levels of concern.

Since the models used are considered to be screening tools in the risk assessment process, the Agency does not use estimated environmental concentrations (EECs) from these models to quantify drinking water exposure and risk as a percent of the reference dose or percent of the population adjusted dose (%RfD or %PAD). Instead, drinking water levels of comparison (DWLOCs) are calculated and used as a point of comparison against the model estimates of a pesticide's concentration in water. DWLOCs are theoretical upper limits on

a pesticide's concentration in drinking water in light of total aggregate exposure to a pesticide in food, and from residential uses. Since DWLOCs address total aggregate exposure to flumioxazin they are further discussed in the aggregate risk sections below.

The hydrolysis study for flumioxazin indicates that flumioxazin forms the metabolite 482-HA, which can further hydrolyze to metabolites APF and THPA. The rates of the two hydrolytic reactions are very pH dependent, but the parent is not very stable at any likely environmental pH. Additional data indicated that THPA and APF are likely to be very mobile. Although THPA can comprise a major portion of the total residue in water, it does not possess the phenyl ring and is thus considered significantly less toxic than parent, APF, and 482-HA, thus THPA needs not be included in the residue of concern for drinking water. Therefore, parent flumioxazin and the metabolites 482-HA and APF are the residues of concern in drinking water.

Based on the GENEEC and SCI-GROW models the EECs of flumioxazin for acute exposures are estimated to be 2.4 parts per billion (ppb) for surface water and 6.3 ppb for ground water. The EECs for chronic exposures are estimated to be 0.67 ppb for surface water and 6.3 ppb for ground water.

3. *From non-dietary exposure*. The term ''residential exposure'' is used in this document to refer to non-occupational, non-dietary exposure (e.g., for lawn and garden pest control, indoor pest control, termiticides, and flea and tick control on pets). Flumioxazin is not registered for use on any sites that would result in residential exposure.

4. *Cumulative exposure to substances with a common mechanism of toxicity*. Section 408(b)(2)(D)(v) of the FFDCA requires that, when considering whether to establish, modify, or revoke a tolerance, the Agency consider ''available information'' concerning the cumulative effects of a particular pesticide's residues and ''other substances that have a common mechanism of toxicity.''

EPA does not have, at this time, available data to determine whether flumioxazin has a common mechanism of toxicity with other substances or how to include this pesticide in a cumulative risk assessment. Unlike other pesticides for which EPA has followed a cumulative risk approach based on a common mechanism of toxicity, flumioxazin does not appear to produce a toxic metabolite produced by other substances. For the purposes of this tolerance action, therefore, EPA has not assumed that flumioxazin has a common mechanism of toxicity with other substances. For information regarding EPA's efforts to determine which chemicals have a common mechanism of toxicity and to evaluate the cumulative effects of such chemicals, see the final rule for Bifenthrin Pesticide Tolerances (62 FR 62961, November 26, 1997).

C. Safety Factor for Infants and Children

1. *In general*. Section 408 of the FFDCA provides that EPA shall apply an additional tenfold margin of safety for infants and children in the case of threshold effects to account for prenatal and postnatal toxicity and the completeness of the data base on toxicity and exposure unless EPA determines that a different margin of safety will be safe for infants and children. Margins of safety are incorporated into EPA risk assessments either directly through use of a MOE analysis or through using uncertainty (safety) factors in calculating a dose level that poses no appreciable risk to humans.

2. *Prenatal and postnatal sensitivity*. The data for flumioxazin indicate that there is both quantitative and qualitative evidence of increased susceptibility to flumioxazin from prenatal or postnatal exposures. Quantitative susceptibility is observed when the young respond more than the adults at a given dose, and qualitative susceptibility is observed when there is a unique biological target, such as the developing brain, that predisposes the individual. The quantitative and qualitative evidence of increased susceptibility is observed with the rat fetuses to *in utero* exposure to flumioxazin in the oral and dermal developmental studies. In both studies, there was an increased incidence in fetal cardiovascular anomalies (especially ventricular septal defects). In the oral study, no maternal effects were seen at the highest dose tested (HDT) (30 milligrams/kilograms (mg/kg/day)); whereas, the effects in the fetuses were observed at 10 mg/kg/day. In the dermal study, no maternal effects were noted at the HDT (300 mg/kg/day); whereas, the effects in the fetuses were observed at 100 mg/kg/day. Regarding the 2-generation rat reproduction study, parental effects (red substance in vagina and increased mortality in females as well as decreases in male and female body weights, body weight gains, and food consumption) were noted at 18.9 mg/kg/day in males HDT and 22.7 mg/kg/day in females HDT. Based on the results of the study, no apparent reproduction effects were attributed to test article administration. The effects observed regarding the offspring were a decrease in both the number of liveborn and pup body weights at 12.7 mg/kg/day for males and 15.1 mg/kg/day for females. Therefore, it was considered that there was both a quantitative and qualitative increase in susceptibility.

5. *Conclusion*. There is a complete toxicity data base for flumioxazin and exposure data are complete or are estimated based on data that reasonably accounts for potential exposures. The FQPA safety factor (as required by the Food Quality Protection Act of August 3,1996) has been retained at 10x for all population subgroups for all exposure durations (acute and chronic) in assessing the risk posed by this chemical. The reasons for retaining the 10x safety factor are as follows. First, there is evidence of increased susceptibility of the rat fetuses to *in utero* exposure to flumioxazin by the oral and dermal route in the prenatal developmental toxicity studies in rats. In addition, there is evidence of increased susceptibility of young animals exposed to flumioxazin in the 2-generation reproduction toxicity study in rats. Finally, there is concern for the severity of the effects observed in fetuses and young animals when compared to those observed in the maternal and parental animals (dose- and treatment-related increase in the incidence of cardiovascular abnormalities, particularly ventricular septal defect, in the developmental studies; and decreases in the number of live born pups and pup body weights in the absence of parental toxicity in the reproduction study).

D. Aggregate Risks and Determination of Safety

To estimate total aggregate exposure to a pesticide from food, drinking water, and residential uses, the Agency calculates DWLOCs which are used as a point of comparison against the model estimates of a pesticide's concentration in water (EECs). DWLOC values are not regulatory standards for drinking water. DWLOCs are theoretical upper limits on a pesticide's concentration in drinking water in light of total aggregate exposure to a pesticide in food and residential uses. In calculating a DWLOC, the Agency determines how much of the acceptable exposure (i.e., the PAD) is available for exposure through drinking water [e.g., allowable chronic water exposure (mg/kg/day) = cPAD - (average food + chronic non-dietary, non-occupational exposure)]. This allowable exposure through drinking water is used to calculate a DWLOC.

A DWLOC will vary depending on the toxic endpoint, drinking water

consumption, and body weights. Default body weights and consumption values as used by the USEPA Office of Water are used to calculate DWLOCs: 2 liter (L)/70 kg (adult male), 2L/60 kg (adult female), and 1L/10 kg (child). Default body weights and drinking water consumption values vary on an individual basis. This variation will be taken into account in more refined screening-level and quantitative drinking water exposure assessments. Different populations will have different DWLOCs. Generally, a DWLOC is calculated for each type of risk assessment used: Acute, short-term, intermediate-term, chronic, and cancer.

When EECs for surface water and ground water are less than the calculated DWLOCs, EPA concludes with reasonable certainty that exposures to flumioxazin in drinking water (when considered along with other sources of exposure for which EPA has reliable data) would not result in unacceptable levels of aggregate human health risk at this time. Because EPA considers the aggregate risk resulting from multiple exposure pathways associated with a pesticide's uses, levels of comparison in drinking water may vary as those uses change. If new uses are added in the future, EPA will reassess the potential impacts of flumioxazin on drinking water as a part of the aggregate risk assessment process.

1. *Acute risk*. Using the exposure assumptions discussed in this unit for acute exposure, the acute dietary exposure from food to flumioxazin will occupy 6% of the aPAD for females 13 years and older. In addition, despite the potential for acute dietary exposure to flumioxazin in drinking water, after calculating DWLOCs and comparing them to conservative model estimated environmental concentrations of flumioxazin in surface water and ground water, EPA does not expect the aggregate exposure to exceed 100% of the aPAD, as shown in the following Table 2:

TABLE 2.—AGGREGATE RISK ASSESSMENT FOR ACUTE EXPOSURE TO FLUMIOXAZIN

Population subgroup	aPAD (mg/kg)	% aPAD (Food)	Surface water EEC (ppb)	Ground water EEC (ppb)	Acute DWLOC (ppb)[a]
Females (13–50 years old)	0.003	4.6	2.4	6.3	86

[a] DWLOC = Drinking Water Level of Comparison = (PAD - dietary exposure) × 1,000 μg/mg × body weight ÷ consumption. Standard body weights are 70 kg adult males, 60 kg adult females, 10 kg infants and children. Standard consumption values are 2 L/day for adults and 1 L/day for infants and children. DWLOC values are rounded to 2 significant figures.

2. *Chronic risk*. Using the exposure assumptions described in this unit for chronic exposure, EPA has concluded that exposure to flumioxazin from food will utilize 4% of the cPAD for the U.S. population, 12% of the cPAD for children 3–5 years old, the subpopulation at greatest exposure and 11% of the cPAD for children 1–2 years old. There are no residential uses for flumioxazin that result in chronic residential exposure to flumioxazin. In addition, despite the potential for chronic dietary exposure to flumioxazin in drinking water, after calculating DWLOCs and comparing them to conservative model estimated environmental concentrations of flumioxazin in surface and ground water, EPA does not expect the aggregate exposure to exceed 100% of the cPAD, as shown in the following Table 3:

TABLE 3.—AGGREGATE RISK ASSESSMENT FOR CHRONIC EXPOSURE TO FLUMIOXAZIN

Population subgroup	cPAD (mg/kg)	% cPAD (Food)	Surface water EEC (ppb)	Ground water EEC (ppb)	Chronic DWLOC (ppb)a
U.S. Population	0.002	4	2.4	6.3	68
All Infants (<1 year old)	0.00	6	2.4	6.3	18
Children (1–2 years old)	0.002	11	2.4	6.3	19
Children (3–5 years old)	0.002	12	2.4	6.3	19
Females (13–49 years old)	0.002	3	2.4	6.3	58
Children (6–12 years old)	0.002	9	2.4	6.3	67
Youths (13–19years old)	0.002	4	2.4	6.3	68
Adults (50+)	0.002	3	2.4	6.3	69

[a] DWLOC = Drinking Water Level of Comparison = (PAD - dietary exposure) × 1000 μg/mg × body weight ÷ consumption. Standard body weights are 70 kg adult males, 60 kg adult females, 10 kg infants and children. Standard consumption values are 2 L/day for adults and 1 L/day for infants and children. DWLOC values are rounded to 2 significant figures.

3. *Short-term risk*. Short-term aggregate exposure takes into account residential exposure plus chronic exposure to food and water (considered to be a background exposure level). Flumioxazin is not registered for use on any sites that would result in residential exposure. Therefore, the aggregate risk is the sum of the risk from food and water, which were previously addressed.

4. *Determination of safety*. Based on these risk assessments, EPA concludes that there is a reasonable certainty that no harm will result to the general population, and to infants and children from aggregate exposure to flumioxazin residues.

V. Other Considerations

A. Analytical Enforcement Methodology

Adequate enforcement methodology is available to enforce the tolerance

expression. The method may be requested from: Calvin Furlow, PIRIB, IRSD (7502C), Office of Pesticide Programs, Environmental Protection Agency, 1200 Pennsylvania Ave., NW, Washington, DC 20460; telephone number: (703) 305–5229; e-mail address:*furlow.calvin@epa.gov.*

B. International Residue Limits

There are no Codex, Canadian or Mexican maximum residue limits established on soybeans or peanuts.

VI. Conclusion

Therefore, the tolerance is established for residues of flumioxazin, 2-[7-fluoro-3,4-dihydro-3-oxo-4-(2-propynyl)-2H-1,4-benzoxazin-6-yl]-4,5,6,7-tetrahydro-1H-isoindole-1,3(2H)-dione, in or on sweet potato, roots at 0.02 ppm.

VII. Objections and Hearing Requests

Under section 408(g) of the FFDCA, as amended by the FQPA, any person may file an objection to any aspect of this regulation and may also request a hearing on those objections. The EPA procedural regulations which govern the submission of objections and requests for hearings appear in 40 CFR part 178. Although the procedures in those regulations require some modification to reflect the amendments made to the FFDCA by the FQPA, EPA will continue to use those procedures, with appropriate adjustments, until the necessary modifications can be made. The new section 408(g) of the FFDCA provides essentially the same process for persons to ''object'' to a regulation for an exemption from the requirement of a tolerance issued by EPA under new section 408(d) of the FFDCA, as was provided in the old sections 408 and 409 of the FFDCA. However, the period for filing objections is now 60 days, rather than 30 days.

A. What Do I Need To Do To File an Objection or Request a Hearing?

You must file your objection or request a hearing on this regulation in accordance with the instructions provided in this unit and in 40 CFR part 178. To ensure proper receipt by EPA, you must identify docket ID number OPP–2003–0253 in the subject line on the first page of your submission. All requests must be in writing, and must be mailed or delivered to the Hearing Clerk on or before October 27, 2003.

1. *Filing the request.* Your objection must specify the specific provisions in the regulation that you object to, and the grounds for the objections (40 CFR 178.25). If a hearing is requested, the objections must include a statement of the factual issues(s) on which a hearing is requested, the requestor's contentions on such issues, and a summary of any evidence relied upon by the objector (40 CFR 178.27). Information submitted in connection with an objection or hearing request may be claimed confidential by marking any part or all of that information as CBI. Information so marked will not be disclosed except in accordance with procedures set forth in 40 CFR part 2. A copy of the information that does not contain CBI must be submitted for inclusion in the public record. Information not marked confidential may be disclosed publicly by EPA without prior notice.

Mail your written request to: Office of the Hearing Clerk (1900C), Environmental Protection Agency, 1200 Pennsylvania Ave., NW., Washington, DC 20460–0001. You may also deliver your request to the Office of the Hearing Clerk in Rm. 104, Crystal Mall #2, 1921 Jefferson Davis Hwy., Arlington, VA. The Office of the Hearing Clerk is open from 8 a.m. to 4 p.m., Monday through Friday, excluding legal holidays. The telephone number for the Office of the Hearing Clerk is (703) 603–0061.

2. *Tolerance fee payment.* If you file an objection or request a hearing, you must also pay the fee prescribed by 40 CFR 180.33(i) or request a waiver of that fee pursuant to 40 CFR 180.33(m). You must mail the fee to: EPA Headquarters Accounting Operations Branch, Office of Pesticide Programs, P.O. Box 360277M, Pittsburgh, PA 15251. Please identify the fee submission by labeling it ''Tolerance Petition Fees.''

EPA is authorized to waive any fee requirement ''when in the judgement of the Administrator such a waiver or refund is equitable and not contrary to the purpose of this subsection.'' For additional information regarding the waiver of these fees, you may contact James Tompkins by phone at (703) 305–5697, by e-mail at *tompkins.jim@epa.gov*, or by mailing a request for information to Mr. Tompkins at Registration Division (7505C), Office of Pesticide Programs, Environmental Protection Agency, 1200 Pennsylvania Ave., NW., Washington, DC 20460–0001.

If you would like to request a waiver of the tolerance objection fees, you must mail your request for such a waiver to: James Hollins, Information Resources and Services Division (7502C), Office of Pesticide Programs, Environmental Protection Agency, 1200 Pennsylvania Ave., NW., Washington, DC 20460–0001.

3. *Copies for the Docket.* In addition to filing an objection or hearing request with the Hearing Clerk as described in Unit VII.A., you should also send a copy of your request to the PIRIB for its inclusion in the official record that is described in Unit I.B.1. Mail your copies, identified by the docket ID number OPP–2003–0253, to: Public Information and Records Integrity Branch, Information Resources and Services Division (7502C), Office of Pesticide Programs, Environmental Protection Agency, 1200 Pennsylvania Ave., NW., Washington, DC 20460–0001. In person or by courier, bring a copy to the location of the PIRIB described in Unit I.B.1. You may also send an electronic copy of your request via e-mail to: *opp-docket@epa.gov*. Please use an ASCII file format and avoid the use of special characters and any form of encryption. Copies of electronic objections and hearing requests will also be accepted on disks in WordPerfect 6.1/8.0 or ASCII file format. Do not include any CBI in your electronic copy. You may also submit an electronic copy of your request at many Federal Depository Libraries.

B. When Will the Agency Grant a Request for a Hearing?

A request for a hearing will be granted if the Administrator determines that the material submitted shows the following: There is a genuine and substantial issue of fact; there is a reasonable possibility that available evidence identified by the requestor would, if established resolve one or more of such issues in favor of the requestor, taking into account uncontested claims or facts to the contrary; and resolution of the factual issues(s) in the manner sought by the requestor would be adequate to justify the action requested (40 CFR 178.32).

VIII. Statutory and Executive Order Reviews

This final rule establishes a time-limited tolerance under section 408 of the FFDCA. The Office of Management and Budget (OMB) has exempted these types of actions from review under Executive Order 12866, entitled *Regulatory Planning and Review* (58 FR 51735, October 4, 1993). Because this rule has been exempted from review under Executive Order 12866 due to its lack of significance, this rule is not subject to Executive Order 13211, *Actions Concerning Regulations That Significantly Affect Energy Supply, Distribution, or Use* (66 FR 28355, May 22, 2001). This final rule does not contain any information collections subject to OMB approval under the Paperwork Reduction Act (PRA), 44 U.S.C. 3501 *et seq.*, or impose any enforceable duty or contain any unfunded mandate as described under Title II of the Unfunded Mandates

Reform Act of 1995 (UMRA) (Public Law 104–4). Nor does it require any special considerations under Executive Order 12898, entitled *Federal Actions to Address Environmental Justice in Minority Populations and Low-Income Populations* (59 FR 7629, February 16, 1994); or OMB review or any Agency action under Executive Order 13045, entitled *Protection of Children from Environmental Health Risks and Safety Risks* (62 FR 19885, April 23, 1997). This action does not involve any technical standards that would require Agency consideration of voluntary consensus standards pursuant to section 12(d) of the National Technology Transfer and Advancement Act of 1995 (NTTAA), Public Law 104–113, section 12(d) (15 U.S.C. 272 note). Since tolerances and exemptions that are established on the basis of a FIFRA section 18 exemption under section 408 of the FFDCA, such as the tolerance in this final rule, do not require the issuance of a proposed rule, the requirements of the Regulatory Flexibility Act (RFA) (5 U.S.C. 601 *et seq.*) do not apply. In addition, the Agency has determined that this action will not have a substantial direct effect on States, on the relationship between the national government and the States, or on the distribution of power and responsibilities among the various levels of government, as specified in Executive Order 13132, entitled *Federalism* (64 FR 43255, August 10, 1999). Executive Order 13132 requires EPA to develop an accountable process to ensure ''meaningful and timely input by State and local officials in the development of regulatory policies that have federalism implications.'' ''Policies that have federalism implications'' is defined in the Executive order to include regulations that have ''substantial direct effects on the States, on the relationship between the national government and the States, or on the distribution of power and responsibilities among the various levels of government.'' This final rule directly regulates growers, food processors, food handlers, and food retailers, not States. This action does not alter the relationships or distribution of power and responsibilities established by Congress in the preemption provisions of section 408(n)(4) of the FFDCA. For these same reasons, the Agency has determined that this rule does not have any ''tribal implications'' as described in Executive Order 13175, entitled *Consultation and Coordination with Indian Tribal Governments* (65 FR 67249, November 6, 2000). Executive Order 13175, requires EPA to develop an accountable process to ensure ''meaningful and timely input by tribal officials in the development of regulatory policies that have tribal implications.'' ''Policies that have tribal implications'' is defined in the Executive order to include regulations that have ''substantial direct effects on one or more Indian tribes, on the relationship between the Federal Government and the Indian tribes, or on the distribution of power and responsibilities between the Federal Government and Indian tribes.'' This rule will not have substantial direct effects on tribal governments, on the relationship between the Federal Government and Indian tribes, or on the distribution of power and responsibilities between the Federal Government and Indian tribes, as specified in Executive Order 13175. Thus, Executive Order 13175 does not apply to this rule.

IX. Congressional Review Act

The Congressional Review Act, 5 U.S.C. 801 *et seq.*, as added by the Small Business Regulatory Enforcement Fairness Act of 1996, generally provides that before a rule may take effect, the agency promulgating the rule must submit a rule report, which includes a copy of the rule, to each House of the Congress and to the Comptroller General of the United States. EPA will submit a report containing this rule and other required information to the U.S. Senate, the U.S. House of Representatives, and the Comptroller General of the United States prior to publication of this final rule in the **Federal Register**. This final rule is not a ''major rule'' as defined by 5 U.S.C. 804(2).

List of Subjects in 40 CFR Part 180

Environmental protection, Administrative practice and procedure, Agricultural commodities, Pesticides and pests, Reporting and recordkeeping requirements.

Dated: August 19, 2003.

Debra Edwards,

Director, Registration Division, Office of Pesticide Programs.

■ Therefore, 40 CFR chapter I is amended as follows:

PART 180—[AMENDED]

■ 1. The authority citation for part 180 continues to read as follows:

Authority: 21 U.S.C. 321(q), 346(a) and 371.

■ 2. Section 180.568 is amended by adding text to paragraph (b) to read as follows:

§ 180.568 Flumioxazin; tolerances for residues.

* * * * *

(b) *Section 18 emergency exemptions.* Time-limited tolerances are established for residues of the herbicide flumioxazin in connection with the use of the pesticides under section 18 emergency exemptions granted by EPA. The tolerances will expire and are revoked on the dates specified in the following table.

Commodity	Parts per million	Expiration/ Revocation date
Sweet potato, roots	0.02	06/30/05

* * * * *

[FR Doc. 03–21662 Filed 8–26–03; 8:45 am]

BILLING CODE 6560–50–S

ENVIRONMENTAL PROTECTION AGENCY

40 CFR Part 180

[OPP–2003–0254; FRL–7320–2]

Thiamethoxam; Pesticide Tolerances for Emergency Exemptions

AGENCY: Environmental Protection Agency (EPA).

ACTION: Final rule.

SUMMARY: This regulation establishes time-limited tolerances for the combined residues of thiamethoxam and CGA–322704 on hops at 0.10 parts per million (ppm); bean, succulent at 0.02 ppm; and bean, dried at 0.02 ppm. This action is in response to EPA's granting of emergency exemptions under section 18 of the Federal Insecticide, Fungicide, and Rodenticide Act (FIFRA) authorizing use of the pesticide on hops, succulent bean seed and dry bean seed. This regulation establishes maximum permissible levels for residues of thiamethoxam in these food commodities. The tolerances will expire and are revoked on December 31, 2006.

DATES: This regulation is effective August 27, 2003. Objections and requests for hearings, identified by docket ID number OPP–2003–0254, must be received on or before October 27, 2003.

ADDRESSES: Written objections and hearing requests may be submitted electronically, by mail, or through hand delivery/courier. Follow the detailed instructions as provided in Unit VII. of the **SUPPLEMENTARY INFORMATION.**

FOR FURTHER INFORMATION CONTACT: Andrew Ertman, Registration Division (7505C), Office of Pesticide Programs, Environmental Protection Agency, 1200 Pennsylvania Ave., NW., Washington, DC 20460–0001; telephone number: (703) 308–9367; e-mail address: *Sec-18-Mailbox@epa.gov.*

SUPPLEMENTARY INFORMATION:

I. General Information

A. Does This Action Apply to Me?

You may be potentially affected by this action if you are a Federal or State Government Agency involved in administration of environmental quality programs (i.e., United States Departments of Agriculture, Environment, etc). Potentially affected entities may include, but are not limited to:

- Federal or State Government Entity (NAICS 9241).

This listing is not intended to be exhaustive, but rather provides a guide for readers regarding entities likely to be affected by this action. Other types of entities not listed in this unit could also be affected. The North American Industrial Classification System (NAICS) codes have been provided to assist you and others in determining whether this action might apply to certain entities. If you have any questions regarding the applicability of this action to a particular entity, consult the person listed under **FOR FURTHER INFORMATION CONTACT**.

B. How Can I Get Copies of This Document and Other Related Information?

1. *Docket*. EPA has established an official public docket for this action under docket ID number OPP–2003–0254. The official public docket consists of the documents specifically referenced in this action, any public comments received, and other information related to this action. Although a part of the official docket, the public docket does not include Confidential Business Information (CBI) or other information whose disclosure is restricted by statute. The official public docket is the collection of materials that is available for public viewing at the Public Information and Records Integrity Branch (PIRIB), Rm. 119, Crystal Mall #2, 1921 Jefferson Davis Hwy., Arlington, VA. This docket facility is open from 8:30 a.m. to 4 p.m., Monday through Friday, excluding legal holidays. The docket telephone number is (703) 305–5805.

2. *Electronic access*. You may access this **Federal Register** document electronically through the EPA Internet under the ''**Federal Register**'' listings at *http://www.epa.gov/fedrgstr/*. A frequently updated electronic version of 40 CFR part 180 is available at *http://www.access.gpo.gov/nara/cfr/cfrhtm_00/Title_40/40cfr180_00.html*, a beta site currently under development.

An electronic version of the public docket is available through EPA's electronic public docket and comment system, EPA Dockets. You may use EPA Dockets at *http://www.epa.gov/edocket/* to submit or view public comments, access the index listing of the contents of the official public docket, and to access those documents in the public docket that are available electronically. Although not all docket materials may be available electronically, you may still access any of the publicly available docket materials through the docket facility identified in Unit I.B.1. Once in the system, select ''search,'' then key in the appropriate docket ID number.

II. Background and Statutory Findings

EPA, on its own initiative, in accordance with sections 408(e) and 408(l)(6) of the Federal Food, Drug, and Cosmetic Act (FFDCA), 21 U.S.C. 346(a), is establishing tolerances for the combined residues of thiamethoxam and CGA–322704 on hops at 0.10 ppm; bean, succulent at 0.02 ppm; and bean, dried at 0.02 ppm. These tolerances will expire and are revoked on December 31, 2006. EPA will publish a document in the **Federal Register** to remove the revoked tolerances from the Code of Federal Regulations.

Section 408(l)(6) of the FFDCA requires EPA to establish a time-limited tolerance or exemption from the requirement for a tolerance for pesticide chemical residues in food that will result from the use of a pesticide under an emergency exemption granted by EPA under section 18 of FIFRA. Such tolerances can be established without providing notice or period for public comment. EPA does not intend for its actions on section 18-related tolerances to set binding precedents for the application of section 408 of the FFDCA and the new safety standard to other tolerances and exemptions. Section 408(e) of the FFDCA allows EPA to establish a tolerance or an exemption from the requirement of a tolerance on its own initiative, i.e., without having received any petition from an outside party.

Section 408(b)(2)(A)(i) of the FFDCA allows EPA to establish a tolerance (the legal limit for a pesticide chemical residue in or on a food) only if EPA determines that the tolerance is ''safe.'' Section 408(b)(2)(A)(ii) of the FFDCA defines ''safe'' to mean that ''there is a reasonable certainty that no harm will result from aggregate exposure to the pesticide chemical residue, including all anticipated dietary exposures and all other exposures for which there is reliable information.'' This includes exposure through drinking water and in residential settings, but does not include occupational exposure. Section 408(b)(2)(C) of the FFDCA requires EPA to give special consideration to exposure of infants and children to the pesticide chemical residue in establishing a tolerance and to ''ensure that there is a reasonable certainty that no harm will result to infants and children from aggregate exposure to the pesticide chemical residue. . . .''

Section 18 of FIFRA authorizes EPA to exempt any Federal or State Agency from any provision of FIFRA, if EPA determines that ''emergency conditions exist which require such exemption.'' This provision was not amended by the Food Quality Protection Act (FQPA) of 1996. EPA has established regulations governing such emergency exemptions in 40 CFR part 166.

III. Emergency Exemption for Thiamethoxam on Hops, Succulent Bean Seed and Dry Bean Seed and FFDCA Tolerances

The States of Washington and Idaho requested the use of thiamethoxam on succuelent and dry bean seed to control leaf hoppers. EPA has authorized under FIFRA section 18 the use of thiamethoxam on succulent and dry bean seed for control of leaf hoppers in Washington and Idaho. After having reviewed the submissions, EPA concurs that emergency conditions exist for these States. The State of Oregon requested the use of thiamethoxam on hops to control garden symphylans. EPA has authorized under FIFRA section 18 the use of thiamethoxam on hops for control of garden symphylans in Oregon. After having reviewed the submission, EPA concurs that an emergency condition exists for this State.

As part of its assessment of this emergency exemption, EPA assessed the potential risks presented by residues of thiamethoxam in or on hops, succulent bean seed and dry bean seed. In doing so, EPA considered the safety standard in section 408(b)(2) of the FFDCA, and EPA decided that the necessary tolerances under section 408(l)(6) of the FFDCA would be consistent with the safety standard and with FIFRA section 18. Consistent with the need to move quickly on the emergency exemption in order to address an urgent non-routine situation and to ensure that the resulting food is safe and lawful, EPA is issuing

these tolerances without notice and opportunity for public comment as provided in section 408(l)(6) of the FFDCA. Although these tolerances will expire and are revoked on December 31, 2006, under section 408(l)(5) of the FFDCA, residues of the pesticide not in excess of the amounts specified in the tolerances remaining in or on hops, succulent beans and dry beans after that date will not be unlawful, provided the pesticide is applied in a manner that was lawful under FIFRA, and the residues do not exceed a level that was authorized by these tolerances at the time of that application. EPA will take action to revoke these tolerances earlier if any experience with, scientific data on, or other relevant information on this pesticide indicate that the residues are not safe.

Because these tolerances are being approved under emergency conditions, EPA has not made any decisions about whether thiamethoxam meets EPA's registration requirements for use on hops, succulent bean seed and dry bean seed or whether permanent tolerances for these uses would be appropriate. Under these circumstances, EPA does not believe that these tolerances serve as a basis for registration of thiamethoxam by a State for special local needs under FIFRA section 24(c). Nor do these tolerances serve as the basis for any State other than Washington and Idaho (succulent and dry bean seed) and Oregon (hops) to use this pesticide on these crops under section 18 of FIFRA without following all provisions of EPA's regulations implementing FIFRA section 18 as identified in 40 CFR part 166. For additional information regarding the emergency exemption for thiamethoxam, contact the Agency's Registration Division at the address provided under **FOR FURTHER INFORMATION CONTACT**.

IV. Aggregate Risk Assessment and Determination of Safety

EPA performs a number of analyses to determine the risks from aggregate exposure to pesticide residues. For further discussion of the regulatory requirements of section 408 of the FFDCA and a complete description of the risk assessment process, see the final rule on Bifenthrin Pesticide Tolerances November 26, 1997 (62 FR 62961) (FRL–5754–7).

Consistent with section 408(b)(2)(D) of the FFDCA, EPA has reviewed the available scientific data and other relevant information in support of this action. EPA has sufficient data to assess the hazards of thiamethoxam and to make a determination on aggregate exposure, consistent with section 408(b)(2) of the FFDCA, for time-limited tolerances for the combined residues of thiamethoxam and CGA–322704 on hops at 0.10 ppm; bean, succulent at 0.02 ppm; and bean, dried at 0.02 ppm. EPA's assessment of the dietary exposures and risks associated with establishing the tolerance follows.

A. Toxicological Endpoints

The dose at which no observed adverse effect levels are observed (the NOAEL) from the toxicology study identified as appropriate for use in risk assessment is used to estimate the toxicological endpoint. However, the lowest dose at which adverse effects of concern are identified (the LOAEL) is sometimes used for risk assessment if no NOAEL was achieved in the toxicology study selected. An uncertainty factor (UF) is applied to reflect uncertainties inherent in the extrapolation from laboratory animal data to humans and in the variations in sensitivity among members of the human population as well as other unknowns. An UF of 100 is routinely used, 10X to account for interspecies differences and 10X for intraspecies differences.

For dietary risk assessment (other than cancer) the Agency uses the UF to calculate an acute or chronic reference dose (aRfD or cRfD) where the RfD is equal to the NOAEL divided by the appropriate UF (RfD = NOAEL/UF). Where an additional safety factor is retained due to concerns unique to the FQPA, this additional factor is applied to the RfD by dividing the RfD by such additional factor. The acute or chronic Population Adjusted Dose (aPAD or cPAD) is a modification of the RfD to accommodate this type of FQPA SF.

For non-dietary risk assessments (other than cancer) the UF is used to determine the level of concern (LOC). For example, when 100 is the appropriate UF (10X to account for interspecies differences and 10X for intraspecies differences) the LOC is 100. To estimate risk, a ratio of the NOAEL to exposures (margin of exposure (MOE) = NOAEL/exposure) is calculated and compared to the LOC.

The linear default risk methodology (Q*) is the primary method currently used by the Agency to quantify carcinogenic risk. The Q* approach assumes that any amount of exposure will lead to some degree of cancer risk. A Q* is calculated and used to estimate risk which represents a probability of occurrence of additional cancer cases (e.g., risk is expressed as 1×10^{-6} or one in a million). Under certain specific circumstances, MOE calculations will be used for the carcinogenic risk assessment. In this non-linear approach, a ''point of departure'' is identified below which carcinogenic effects are not expected. The point of departure is typically a NOAEL based on an endpoint related to cancer effects though it may be a different value derived from the dose response curve. To estimate risk, a ratio of the point of departure to exposure (MOE_{cancer} = point of departure/exposures) is calculated. A summary of the toxicological endpoints for thiamethoxam used for human risk assessment is shown in the following Table 1:

TABLE 1.—SUMMARY OF TOXICOLOGICAL DOSE AND ENDPOINTS FOR THIAMETHOXAM FOR USE IN HUMAN RISK ASSESSMENT

Exposure scenario	Dose used in risk assessment, UF	FQPA SF* and level of concern for risk assessment	Study and toxicological effects
Acute dietary (general population including infants and children)	NOAEL = 100 mg/kg/day UF = 100 Acute RfD = 1 mg/kg/day	FQPA SF = 10 aPAD = acute RfD FQPA SF = 0.1 mg/kg/day	Acute mammalian neurotoxicity study in the rat LOAEL = 500 mg/kg/day based on treatment-related neurobehavioral effects observed in the FOB and LMA testing (drooped palpebral closure, decreased rectal temperature and locomotor activity, increased forelimb grip strength).

TABLE 1.—SUMMARY OF TOXICOLOGICAL DOSE AND ENDPOINTS FOR THIAMETHOXAM FOR USE IN HUMAN RISK ASSESSMENT—Continued

Exposure scenario	Dose used in risk assessment, UF	FQPA SF* and level of concern for risk assessment	Study and toxicological effects
Chronic dietary (all populations)	NOAEL = 0.6 mg/kg/day UF = 100 Chronic RfD = 0.006 mg/kg/day	FQPA SF = 10 cPAD = chronic RfD FQPA SF = 0.0006 mg/kg/day	2-Generation reproduction study LOAEL = 1.8 mg/kg/day based on increased incidence and severity of tubular atrophy in testes of F1 generation males.
Oral nondietary (all durations)	NOAEL = 0.6 mg/kg/day	LOC for MOE = 1,000 (Residential)	2-Generation reproduction study LOAEL = 1.8 mg/kg/day based on increased incidence and severity of tubular atrophy in testes of F1 generation males.
Dermal (all durations) (Residential)	Oral study NOAEL = 0.6 mg/kg/day (dermal absorption rate = 5%)	LOC for MOE = 1,000 (Residential) LOC for MOE = 100 (Occupational)	2-Generation reproduction study LOAEL = 1.8 mg/kg/day based on increased incidence and severity of tubular atrophy in testes of F1 generation males.
Inhalation (all durations) (Residential)	Oral study NOAEL= 0.6 mg/kg/day (inhalation absorption rate = 100%)	LOC for MOE = 1,000 (Residential) LOC for MOE = 100 (Occupational)	2-Generation reproduction study LOAEL = 1.8 mg/kg/day based on increased incidence and severity of tubular atrophy in testes of F1 generation males.
Cancer (oral, dermal, inhalation)	Likely carcinogen for humans based on increased incidence of hepatocellular adenomas and carcinomas in male and female mice. Quantification of risk based on most potent unit risk: male mouse liver adenoma and/or carcinoma combined tumor rate. The upper bound estimate of unit risk, Q1* milligrams/kilogram/day $(mg/kg/day)^{-1}$ is 3.77×10^{-2} in human equivalents.		

*The reference to the FQPA SF refers to any additional SF retained due to concerns unique to the FQPA.

B. Exposure Assessment

1. *Dietary exposure from food and feed uses.* Tolerances have been established for the combined residues of thiamethoxam, in or on a variety of raw agricultural commodities (RAC). The following RAC's have established tolerances: Barley, canola, cotton, sorghum, wheat, tuberous and corm vegetables crop subgroup, fruiting vegetables, crop group, tomato paste, cucurbit vegetables crop group, pome fruits crop group, milk and the meat and meat by products of cattle, goats, horses, and sheep. Risk assessments were conducted by EPA to assess dietary exposures from thiamethoxam in food as follows:

i. *Acute exposure.* Acute dietary risk assessments are performed for a food-use pesticide if a toxicological study has indicated the possibility of an effect of concern occurring as a result of a 1–day or single exposure. The Dietary Exposure Evaluation Model (DEEM™) analysis evaluated the individual food consumption as reported by respondents in the United States Department of Agriculture (USDA) 1994–1996 nationwide Continuing Surveys of Food Intake by Individuals (CSFII) and accumulated exposure to the chemical for each commodity. The following assumptions were made for the acute exposure assessments: Tolerence level residues and 100% crop treated.

ii. *Chronic exposure.* In conducting this chronic dietary risk assessment the DEEM™ analysis evaluated the individual food consumption as reported by respondents in the USDA 1994–1996 nationwide CSFII and accumulated exposure to the chemical for each commodity. The chronic exposure estimates are based on Tier 3 analyses that incorporate anticipated residues and percent crop treated (PCT) for most commodities.

iii. *Cancer.* Cancer dietary exposure has been estimated using the DEEM-FCID version 1.3. The cancer exposure estimates are based on Tier 3 analyses that incorporate anticipated residues and PCT for most commodities.

iv. *Anticipated residue and PCT information.* Section 408(b)(2)(E) of the FFDCA authorizes EPA to use available data and information on the anticipated residue levels of pesticide residues in food and the actual levels of pesticide chemicals that have been measured in food. If EPA relies on such information, EPA must require that data be provided 5 years after the tolerance is established, modified, or left in effect, demonstrating that the levels in food are not above the levels anticipated. Following the initial data submission, EPA is authorized to require similar data on a time frame it deems appropriate. As required by section 408(b)(2)(E) of the FFDCA, EPA will issue a Data Call-In for information relating to anticipated residues to be submitted no later than 5 years from the date of issuance of this tolerance.

Section 408(b)(2)(F) of the FFDCA states that the Agency may use data on the actual percent of food treated for assessing chronic dietary risk only if the Agency can make the following findings: Condition 1, that the data used are reliable and provide a valid basis to show what percentage of the food derived from such crop is likely to contain such pesticide residue; condition 2, that the exposure estimate does not underestimate exposure for any significant subpopulation group; and condition 3, if data are available on pesticide use and food consumption in a particular area, the exposure estimate does not understate exposure for the population in such area. In addition, the Agency must provide for periodic evaluation of any estimates used. To

provide for the periodic evaluation of the estimate of PCT as required by section 408(b)(2)(F) of the FFDCA, EPA may require registrants to submit data on PCT.

The Agency used PCT information as follows: Potatos, 19%; fruiting vegetables, 15%; cucumbers, 5%; melons, 13%; casabas, 44%; crenshaws, 44%; squash, 44%; pumpkins, 44%; apples, 5%; crabapples, 53%; pears, 9%; quinces, 53%; loquat, 53%; barley, 0.1%; sorghum, 9%; wheat, 2%; canola, 55%; cotton, 20%.

The Agency believes that the three conditions listed above have been met. With respect to condition 1, PCT estimates are derived from Federal and private market survey data, which are reliable and have a valid basis. EPA uses a weighted average PCT for chronic dietary exposure estimates. This weighted average PCT figure is derived by averaging State-level data for a period of up to 10 years, and weighting for the more robust and recent data. A weighted average of the PCT reasonably represents a person's dietary exposure over a lifetime, and is unlikely to underestimate exposure to an individual because of the fact that pesticide use patterns (both regionally and nationally) tend to change continuously over time, such that an individual is unlikely to be exposed to more than the average PCT over a lifetime. For acute dietary exposure estimates, EPA uses an estimated maximum PCT. The exposure estimates resulting from this approach reasonably represent the highest levels to which an individual could be exposed, and are unlikely to underestimate an individual's acute dietary exposure. The Agency is reasonably certain that the percentage of the food treated is not likely to be an underestimation. As to conditions 2 and 3, regional consumption information and consumption information for significant subpopulations is taken into account through EPA's computer-based model for evaluating the exposure of significant subpopulations including several regional groups. Use of this consumption information in EPA's risk assessment process ensures that EPA's exposure estimate does not understate exposure for any significant subpopulation group and allows the Agency to be reasonably certain that no regional population is exposed to residue levels higher than those estimated by the Agency. Other than the data available through national food consumption surveys, EPA does not have available information on the regional consumption of food to which thiamethoxam may be applied in a particular area.

2. *Dietary exposure from drinking water*. The Agency lacks sufficient monitoring exposure data to complete a comprehensive dietary exposure analysis and risk assessment for thiamethoxam in drinking water. Because the Agency does not have comprehensive monitoring data, drinking water concentration estimates are made by reliance on simulation or modeling taking into account data on the physical characteristics of thiamethoxam.

The Agency uses the Generic Estimated Environmental Concentration (GENEEC) or the Pesticide Root Zone/ Exposure Analysis Modeling System (PRZM/EXAMS) to estimate pesticide concentrations in surface water and (SCI-GROW), which predicts pesticide concentrations in ground water. In general, EPA will use GENEEC (a Tier 1 model) before using PRZM/EXAMS (a Tier 2 model) for a screening-level assessment for surface water. The GENEEC model is a subset of the PRZM/ EXAMS model that uses a specific high-end runoff scenario for pesticides. GENEEC incorporates a farm pond scenario, while PRZM/EXAMS incorporate an index reservoir environment in place of the previous pond scenario. The PRZM/EXAMS model includes a percent crop area factor as an adjustment to account for the maximum percent crop coverage within a watershed or drainage basin.

None of these models include consideration of the impact processing (mixing, dilution, or treatment) of raw water for distribution as drinking water would likely have on the removal of pesticides from the source water. The primary use of these models by the Agency at this stage is to provide a coarse screen for sorting out pesticides for which it is highly unlikely that drinking water concentrations would ever exceed human health levels of concern.

Since the models used are considered to be screening tools in the risk assessment process, the Agency does not use estimated environmental concentrations (EECs) from these models to quantify drinking water exposure and risk as a percent reference dose (%RfD) or percent population adjusted dose (%PAD). Instead drinking water levels of comparison (DWLOCs) are calculated and used as a point of comparison against the model estimates of a pesticide's concentration in water. DWLOCs are theoretical upper limits on a pesticide's concentration in drinking water in light of total aggregate exposure to a pesticide in food, and from residential uses. Since DWLOCs address total aggregate exposure to thiamethoxam, they are further discussed in the aggregate risk sections below.

Based on the PRZM/EXAMS and SCI-GROW models, the EECs of thiamethoxam for acute exposures are estimated to be 7.1 parts per billion (ppb) for surface water and 1.94 ppb for ground water. The EECs for chronic exposures are estimated to be 0.43 (non-cancer) and 0.13 ppb (cancer) for surface water and 1.94 ppb for ground water (cancer and non-cancer).

3. *From non-dietary exposure*. The term ''residential exposure'' is used in this document to refer to non-occupational, non-dietary exposure (e.g., for lawn and garden pest control, indoor pest control, termiticides, and flea and tick control on pets). Thiamethoxam is not registered for use on any sites that would result in residential exposure.

4. *Cumulative exposure to substances with a common mechanism of toxicity*. Section 408(b)(2)(D)(v) of the FFDCA requires that, when considering whether to establish, modify, or revoke a tolerance, the Agency consider ''available information'' concerning the cumulative effects of a particular pesticide's residues and ''other substances that have a common mechanism of toxicity.''

EPA does not have, at this time, available data to determine whether thiamethoxam has a common mechanism of toxicity with other substances or how to include this pesticide in a cumulative risk assessment. Unlike other pesticides for which EPA has followed a cumulative risk approach based on a common mechanism of toxicity, thiamethoxam does not appear to produce a toxic metabolite produced by other substances. For the purposes of this tolerance action, therefore, EPA has not assumed that thiamethoxam has a common mechanism of toxicity with other substances. For information regarding EPA's efforts to determine which chemicals have a common mechanism of toxicity and to evaluate the cumulative effects of such chemicals, see the final rule for Bifenthrin Pesticide Tolerances (62 FR 62961, November 26, 1997).

C. Safety Factor for Infants and Children

1. *In general*. Section 408 of the FFDCA provides that EPA shall apply an additional tenfold margin of safety for infants and children in the case of threshold effects to account for prenatal and postnatal toxicity and the completeness of the data base on toxicity and exposure unless EPA determines that a different margin of

safety will be safe for infants and children. Margins of safety are incorporated into EPA risk assessments either directly through use of a MOE analysis or through using uncertainty (safety) factors in calculating a dose level that poses no appreciable risk to humans.

2. *Prenatal and postnatal sensitivity*. The developmental toxicity studies indicated no quantitative or qualitative evidence of increased susceptibility of rat or rabbit fetus to *in utero* exposure based on the fact that the developmental NOAELs are either higher than or equal to the maternal NOAELs. However, the reproductive studies indicate effects in male rats in the form of increased incidence and severity of testicular tubular atrophy. These data are considered to be evidence of increased quantitative susceptibility for male pups when compared to the parents.

3. *Conclusions*. Based on:

i. Effects on endocrine organs observed across species.

ii. The significant decrease in alanine amino transferase levels in the companion animal studies and in the dog studies.

iii. The mode of action of this chemical in insects (interferes with the nicotinic acetyl choline receptors of the insect's nervous system) thus a developmental neurotoxicity study is required.

iv. The transient clinical signs of neurotoxicity in several studies across species.

v. The suggestive evidence of increased quantitative susceptibility in the rat reproduction study, the Agency is retaining the FQPA factor which is l0X.

D. Aggregate Risks and Determination of Safety

To estimate total aggregate exposure to a pesticide from food, drinking water, and residential uses, the Agency calculates DWLOCs which are used as a point of comparison against the model estimates of a pesticide's concentration in water (EECs). DWLOC values are not regulatory standards for drinking water. DWLOCs are theoretical upper limits on a pesticide's concentration in drinking water in light of total aggregate exposure to a pesticide in food and residential uses. In calculating a DWLOC, the Agency determines how much of the acceptable exposure (i.e., the PAD) is available for exposure through drinking water e.g., allowable chronic water exposure (mg/kg/day) = cPAD - (average food + chronic non-dietary, non-occupational exposure). This allowable exposure through drinking water is used to calculate a DWLOC.

A DWLOC will vary depending on the toxic endpoint, drinking water consumption, and body weights. Default body weights and consumption values as used by EPA Office of Water are used to calculate DWLOCs: 2 liter (L)/70 kg (adult male), 2L/60 kg (adult female), and 1L/10 kg (child). Default body weights and drinking water consumption values vary on an individual basis. This variation will be taken into account in more refined screening-level and quantitative drinking water exposure assessments. Different populations will have different DWLOCs. Generally, a DWLOC is calculated for each type of risk assessment used: Acute, short-term, intermediate-term, chronic, and cancer.

When EECs for surface water and ground water are less than the calculated DWLOCs, EPA concludes with reasonable certainty that exposures to thiamethoxam in drinking water (when considered along with other sources of exposure for which EPA has reliable data) would not result in unacceptable levels of aggregate human health risk at this time. Because EPA considers the aggregate risk resulting from multiple exposure pathways associated with a pesticide's uses, levels of comparison in drinking water may vary as those uses change. If new uses are added in the future, EPA will reassess the potential impacts of thiamethoxam on drinking water as a part of the aggregate risk assessment process.

1. *Acute risk*. Using the exposure assumptions discussed in this unit for acute exposure, the acute dietary exposure from food to thiamethoxam will occupy 3% of the aPAD for the U.S. population; 2% of the aPAD for females 13 years and older; 7% of the aPAD for all infants <1 year old; and 9% of the aPAD for children 1–2 years old. In addition, despite the potential for acute dietary exposure to thiamethoxam in drinking water, after calculating DWLOCs and comparing them to conservative EECs of thiamethoxam in surface water and ground water, EPA does not expect the aggregate exposure to exceed 100% of the aPAD, as shown in the following Table 2:

TABLE 2.—AGGREGATE RISK ASSESSMENT FOR ACUTE EXPOSURE TO THIAMETHOXAM

Population subgroup	aPAD (mg/kg)	% aPAD (Food)	Surface water EEC (ppb)	Ground water EEC (ppb)	Acute DWLOC (ppb)
General U.S. population	0.1	3	7.1	1.94	3,400
All Infants (<1 year old)	0.1	7	7.1	1.94	930
Children (1–2 years old)	0.1	9	7.1	1.94	910
Children (3–5 years old)	0.1	6	7.1	1.94	940
Children (6–12 years old)	0.1	4	7.1	1.94	960
Youth (13–19 years old)	0.1	2	7.1	1.94	3,400
Adults (20–49 years old)	0.1	2	7.1	1.94	3,400
Adults (50+ years old)	0.1	2	7.1	1.94	3,400
Females (13–49 years old)	0.1	2	7.1	1.94	3,000

2. *Chronic risk*. Using the exposure assumptions described in this unit for chronic exposure, EPA has concluded that exposure to thiamethoxam from food will utilize 4% of the cPAD for the U.S. population, 8% of the cPAD for all

infants <1 year old and 12% of the cPAD for children 1–2 years old. There are no residential uses for thiamethoxam that result in chronic residential exposure to thiamethoxam. In addition, despite the potential for chronic dietary exposure to thiamethoxam in drinking water, after calculating DWLOCs and comparing them to conservative model estimated environmental concentrations of thiamethoxam in surface water and ground water, EPA does not expect the aggregate exposure to exceed 100% of the cPAD, as shown in the following Table 3:

TABLE 3.—AGGREGATE RISK ASSESSMENT FOR CHRONIC (NON-CANCER) EXPOSURE TO THIAMETHOXAM

Population subgroup	cPAD mg/kg/day	% cPAD (Food)	Surface water EEC (ppb)	Ground water EEC (ppb)	Chronic DWLOC (ppb)
General U.S. population	0.0006	4	0.43	1.94	20
All infants (<1 year old)	0.0006	8	0.43	1.94	5.6
Children (1–2 years old)	0.0006	12	0.43	1.94	5.3
Children (3–5 years old)	0.0006	10	0.43	1.94	5.4
Children (6–12 years old)	0.0006	6	0.43	1.94	5.6
Youth (13–19 years old)	0.0006	4	0.43	1.94	20
Adults (20–49 years old)	0.0006	3	0.43	1.94	20
Adults (50+ years old)	0.0006	3	0.43	1.94	20
Females (13–49 years old)	0.0006	3	0.43	1.94	17

3. *Short-term risk*. Short-term aggregate exposure takes into account residential exposure plus chronic exposure to food and water (considered to be a background exposure level). Thiamethoxam is not registered for use on any sites that would result in residential exposure. Therefore, the aggregate risk is the sum of the risk from food and water, which were previously addressed.

4. *Intermediate-term risk*. Intermediate-term aggregate exposure takes into account non-dietary, non-occupational exposure plus chronic exposure to food and water (considered to be a background exposure level). Thiamethoxam is not registered for use on any sites that would result in residential exposure. Therefore, the aggregate risk is the sum of the risk from food and water, which were previously addressed.

5. *Aggregate cancer risk for U.S. population*. At the present time, there are no uses of thiamethoxam that will result in non-dietary, non-occupational (i.e., residential) exposures. Therefore, aggregate cancer risk estimates for thiamethoxam address only the food and drinking water pathways of exposure. EECs for thiamethoxam for comparison to the DWLOCs are 1.94 µg/L for cancer scenarios. The Agency does not have aggregate risk concerns when the estimated residues in water are less than the DWLOCs.

For cancer risk, which is estimated for the total U.S. population only, the DWLOC is 2.15 µg/L and assumes a negligible risk level of 3×10^{-6} rather than 1×10^{-6}. For risk management purposes, EPA considers a cancer risk to be greater than negligible when it exceeds the range of 1 in 1 million, however the Agency has generally treated cancer risks up to 3 in 1 million as within the range of 1 in 1 million. The DWLOC value indicates that aggregate exposure to thiamethoxam is not likely to exceed the Agency's level of concern as shown in the following Table 4:

TABLE 4.—AGGREGATE RISK ASSESSMENT FOR CHRONIC (CANCER) EXPOSURE TO THIAMETHOXAM

Population subgroup	Maximum acceptable exposure (mg/kg/day)[1]	Food exposure (mg/kg/day)	Maximum water exposure (mg/kg/day)[2]	Surface water EEC (ppb)	Ground water EEC (ppb)	Cancer DWLOC (ppb)[3]
General U.S. population	0.0000795	0.000018	0.000062	0.13	1.94	2.15

[1] Maximum acceptable exposure = $3 \times 10^{-6} \div 0.0377$ (mg/kg/day)$^{-1}$ = 7.95×10^{-5} mg/kg/day.
[2] Maximum water exposure = maximum acceptable exposure - food exposure.
[3] DWLOC = maximum water exposure (mg/kg/day) 1,000 µg/mg H body weight (70 kg general population) ÷ water consumption (2 L/day). Value has been rounded to three significant figures.

EPA recognizes that the active ingredient clothianidin is identical to the thiamethoxam metabolite-of-concern CGA–322704; however, clothianidin has not been classified as a carcinogen and therefore, it has been removed from the cancer assessment.

6. *Determination of safety*. Based on these risk assessments, EPA concludes that there is a reasonable certainty that no harm will result to the general population, and to infants and children from aggregate exposure to thiamethoxam residues.

V. Other Considerations

A. Analytical Enforcement Methodology

Adequate enforcement methodology High Performance Liquid Chromatography using Ultra Violet or Mass Spectrometry (HPLC/UV or MS) is

available to enforce the tolerance expression. The method may be requested from: Calvin Furlow, PIRIB, IRSD (7502C), Office of Pesticide Programs, Environmental Protection Agency, 1200 Pennsylvania Ave., NW., Washington, DC 20460; telephone number: (703) 305–5229; e-mail address: *furlow.calvin@epa.gov*.

B. International Residue Limits

There are no CODEX, Canadian, or Mexican maximum residue limits that impact this action.

C. Conditions

The thiamethoxam label currently contains the following rotational crop restriction: Immediate rotation to any crop on the label or to cucurbit vegetables, fruiting vegetables, cotton, sorghum, corn, wheat, barley, canola, tuberous and corm vegetables, and tobacco. For all other crops, a 120–day plant back interval must be observed. That restriction is adequate to cover the requested section 18 use as a seed treatment for succulent and dried beans. Hops is not rotated and, therefore, does not raise any potential rotational crop issues.

VI. Conclusion

Therefore, the tolerances are established for the combined residues of thiamethoxam and CGA–322704 on hops at 0.10 ppm; bean, succulent at 0.02 ppm; and bean, dried at 0.02 ppm.

VII. Objections and Hearing Requests

Under section 408(g) of the FFDCA, as amended by the FQPA, any person may file an objection to any aspect of this regulation and may also request a hearing on those objections. The EPA procedural regulations which govern the submission of objections and requests for hearings appear in 40 CFR part 178. Although the procedures in those regulations require some modification to reflect the amendments made to the FFDCA by the FQPA, EPA will continue to use those procedures, with appropriate adjustments, until the necessary modifications can be made. The new section 408(g) of the FFDCA provides essentially the same process for persons to ''object'' to a regulation for an exemption from the requirement of a tolerance issued by EPA under new section 408(d) of the FFDCA, as was provided in the old sections 408 and 409 of the FFDCA. However, the period for filing objections is now 60 days, rather than 30 days.

A. What Do I Need To Do To File an Objection or Request a Hearing?

You must file your objection or request a hearing on this regulation in accordance with the instructions provided in this unit and in 40 CFR part 178. To ensure proper receipt by EPA, you must identify docket ID number OPP–2003–0254 in the subject line on the first page of your submission. All requests must be in writing, and must be mailed or delivered to the Hearing Clerk on or before October 27, 2003.

1. *Filing the request*. Your objection must specify the specific provisions in the regulation that you object to, and the grounds for the objections (40 CFR 178.25). If a hearing is requested, the objections must include a statement of the factual issues(s) on which a hearing is requested, the requestor's contentions on such issues, and a summary of any evidence relied upon by the objector (40 CFR 178.27). Information submitted in connection with an objection or hearing request may be claimed confidential by marking any part or all of that information as CBI. Information so marked will not be disclosed except in accordance with procedures set forth in 40 CFR part 2. A copy of the information that does not contain CBI must be submitted for inclusion in the public record. Information not marked confidential may be disclosed publicly by EPA without prior notice.

Mail your written request to: Office of the Hearing Clerk (1900C), Environmental Protection Agency, 1200 Pennsylvania Ave., NW., Washington, DC 20460–0001. You may also deliver your request to the Office of the Hearing Clerk in Rm.104, Crystal Mall #2, 1921 Jefferson Davis Hwy., Arlington, VA. The Office of the Hearing Clerk is open from 8 a.m. to 4 p.m., Monday through Friday, excluding legal holidays. The telephone number for the Office of the Hearing Clerk is (703) 603–0061.

2. *Tolerance fee payment*. If you file an objection or request a hearing, you must also pay the fee prescribed by 40 CFR 180.33(i) or request a waiver of that fee pursuant to 40 CFR 180.33(m). You must mail the fee to: EPA Headquarters Accounting Operations Branch, Office of Pesticide Programs, P.O. Box 360277M, Pittsburgh, PA 15251. Please identify the fee submission by labeling it ''Tolerance Petition Fees.''

EPA is authorized to waive any fee requirement ''when in the judgement of the Administrator such a waiver or refund is equitable and not contrary to the purpose of this subsection.'' For additional information regarding the waiver of these fees, you may contact James Tompkins by phone at (703) 305–5697, by e-mail at *tompkins.jim@epa.gov*, or by mailing a request for information to Mr. Tompkins at Registration Division (7505C), Office of Pesticide Programs, Environmental Protection Agency, 1200 Pennsylvania Ave., NW., Washington, DC 20460–0001.

If you would like to request a waiver of the tolerance objection fees, you must mail your request for such a waiver to: James Hollins, Information Resources and Services Division (7502C), Office of Pesticide Programs, Environmental Protection Agency, 1200 Pennsylvania Ave., NW., Washington, DC 20460–0001.

3.*Copies for the Docket*. In addition to filing an objection or hearing request with the Hearing Clerk as described in Unit VII.A., you should also send a copy of your request to the PIRIB for its inclusion in the official record that is described in Unit I.B.1. Mail your copies, identified by the docket ID number OPP–2003–0254, to: Public Information and Records Integrity Branch, Information Resources and Services Division (7502C), Office of Pesticide Programs, Environmental Protection Agency, 1200 Pennsylvania Ave., NW., Washington, DC 20460–0001. In person or by courier, bring a copy to the location of the PIRIB described in Unit I.B.1. You may also send an electronic copy of your request via e-mail to: *opp-docket@epa.gov*. Please use an ASCII file format and avoid the use of special characters and any form of encryption. Copies of electronic objections and hearing requests will also be accepted on disks in WordPerfect 6.1/8.0 or ASCII file format. Do not include any CBI in your electronic copy. You may also submit an electronic copy of your request at many Federal Depository Libraries.

B. When Will the Agency Grant a Request for a Hearing?

A request for a hearing will be granted if the Administrator determines that the material submitted shows the following: There is a genuine and substantial issue of fact; there is a reasonable possibility that available evidence identified by the requestor would, if established resolve one or more of such issues in favor of the requestor, taking into account uncontested claims or facts to the contrary; and resolution of the factual issues(s) in the manner sought by the requestor would be adequate to justify the action requested (40 CFR 178.32).

VIII. Statutory and Executive Order Reviews

This final rule establishes time-limited tolerances under section 408 of

the FFDCA. The Office of Management and Budget has exempted these types of actions from review under Executive Order 12866, entitled *Regulatory Planning and Review* (58 FR 51735, October 4, 1993). Because this rule has been exempted from review under Executive Order 12866 due to its lack of significance, this rule is not subject to Executive Order 13211, *Actions Concerning Regulations That Significantly Affect Energy Supply, Distribution, or Use* (66 FR 28355, May 22, 2001). This final rule does not contain any information collections subject to OMB approval under the Paperwork Reduction Act (PRA), 44 U.S.C. 3501 *et seq.*, or impose any enforceable duty or contain any unfunded mandate as described under Title II of the Unfunded Mandates Reform Act of 1995 (UMRA) (Public Law 104–4). Nor does it require any special considerations under Executive Order 12898, entitled *Federal Actions to Address Environmental Justice in Minority Populations and Low-Income Populations* (59 FR 7629, February 16, 1994); or OMB review or any Agency action under Executive Order 13045, entitled *Protection of Children from Environmental Health Risks and Safety Risks* (62 FR 19885, April 23, 1997). This action does not involve any technical standards that would require Agency consideration of voluntary consensus standards pursuant to section 12(d) of the National Technology Transfer and Advancement Act of 1995 (NTTAA), Public Law 104–113, section 12(d) (15 U.S.C. 272 note). Since tolerances and exemptions that are established on the basis of a FIFRA section 18 exemption under section 408 of the FFDCA, such as the [tolerances] in this final rule, do not require the issuance of a proposed rule, the requirements of the Regulatory Flexibility Act (RFA) (5 U.S.C. 601 *et seq.*) do not apply. In addition, the Agency has determined that this action will not have a substantial direct effect on States, on the relationship between the national government and the States, or on the distribution of power and responsibilities among the various levels of government, as specified in Executive Order 13132, entitled *Federalism* (64 FR 43255, August 10, 1999). Executive Order 13132 requires EPA to develop an accountable process to ensure ''meaningful and timely input by State and local officials in the development of regulatory policies that have federalism implications. ''Policies that have federalism implications'' is defined in the Executive Order to include regulations that have ''substantial direct effects on the States, on the relationship between the national government and the States, or on the distribution of power and responsibilities among the various levels of government.'' This final rule directly regulates growers, food processors, food handlers, and food retailers, not States. This action does not alter the relationships or distribution of power and responsibilities established by Congress in the preemption provisions of section 408(n)(4) of the FFDCA. For these same reasons, the Agency has determined that this rule does not have any ''tribal implications'' as described in Executive Order 13175, entitled *Consultation and Coordination with Indian Tribal Governments* (65 FR 67249, November 6, 2000). Executive Order 13175, requires EPA to develop an accountable process to ensure ''meaningful and timely input by tribal officials in the development of regulatory policies that have tribal implications.'' ''Policies that have tribal implications'' is defined in the Executive Order to include regulations that have ''substantial direct effects on one or more Indian tribes, on the relationship between the Federal Government and the Indian tribes, or on the distribution of power and responsibilities between the Federal Government and Indian tribes.'' This rule will not have substantial direct effects on tribal governments, on the relationship between the Federal Government and Indian tribes, or on the distribution of power and responsibilities between the Federal Government and Indian tribes, as specified in Executive Order 13175. Thus, Executive Order 13175 does not apply to this rule.

IX. Congressional Review Act

The Congressional Review Act, 5 U.S.C. 801 *et seq.*, as added by the Small Business Regulatory Enforcement Fairness Act of 1996, generally provides that before a rule may take effect, the agency promulgating the rule must submit a rule report, which includes a copy of the rule, to each House of the Congress and to the Comptroller General of the United States. EPA will submit a report containing this rule and other required information to the U.S. Senate, the U.S. House of Representatives, and the Comptroller General of the United States prior to publication of this final rule in the **Federal Register**. This final rule is not a ''major rule'' as defined by 5 U.S.C. 804(2).

List of Subjects in 40 CFR Part 180

Environmental protection, Administrative practice and procedure, Agricultural commodities, Pesticides and pests, Reporting and recordkeeping requirements.

Dated: August 14, 2003.

Debra Edwards,

Director, Registration Division, Office of Pesticide Programs.

■ Therefore, 40 CFR chapter I is amended as follows:

PART 180—AMENDED

■ 1. The authority citation for part 180 continues to read as follows:

Authority: 21 U.S.C. 321(q), 346(a) and 371.

■ 2. Section 180.565 is amended by adding text to paragraph (b) to read as follows:

§ 180.565 Thiamethoxam; tolerances for residues.

* * * * *

(b) *Section 18 emergency exemptions.* Time-limited tolerances are established for the combined residues of the insecticide thiamethoxam [3-[(2-chloro-5-thiazolyl)methyl]tetrahydro-5-methyl-*N*-nitro-4H-1,3,5-oxadiazin-4-imine] and its metabolite CGA-322704 in connection with use of the pesticide under section 18 emergency exemptions granted by EPA. These tolerances will expire and are revoked on the dates specified in the following table:

Commodity	Parts per million	Expiration/revocation date
Bean, dried	0.02	12/31/06
Bean, succulent	0.02	12/31/06
Hops	0.10	12/31/06

* * * * *

[FR Doc. 03–21783 Filed 8–26–03; 8:45 am]

BILLING CODE 6560–50–S

ENVIRONMENTAL PROTECTION AGENCY

40 CFR Part 180

[OPP–2003–0279; FRL–7323–1]

Diflubenzuron; Pesticide Tolerances for Emergency Exemptions

AGENCY: Environmental Protection Agency (EPA).

ACTION: Final rule.

SUMMARY: This regulation establishes time-limited tolerances for combined residues of diflubenzuron in or on wheat and barley commodities. This action is in response to treatment of these crops under section 18 of the Federal Insecticide, Fungicide, and

Rodenticide Act (FIFRA). This regulation establishes maximum permissible levels for residues of diflubenzuron in these food commodities. The tolerances will expire and are revoked on December 31, 2005.

DATES: This regulation is effective August 27, 2003. Objections and requests for hearings, identified by docket (ID) number OPP–2003–0279, must be received on or before October 27, 2003.

ADDRESSES: Written objections and hearing requests may be submitted electronically, by mail, or through hand delivery/courier. Follow the detailed instructions as provided in Unit VII. of the **SUPPLEMENTARY INFORMATION**.

FOR FURTHER INFORMATION CONTACT: Andrea Conrath, Registration Division (7505C), Office of Pesticide Programs, Environmental Protection Agency, 1200 Pennsylvania Ave., NW., Washington, DC 20460–0001; telephone number: (703) 308–9356; e-mail address: *conrath.andrea@epa.gov*.

SUPPLEMENTARY INFORMATION:

I. General Information

A. Does this Action Apply to Me?

You may be potentially affected by this action if you are an agricultural producer, food manufacturer, or pesticide manufacturer. Potentially affected entities may include, but are not limited to:

- Crop producers (NAICS 111)
- Animal producers (NAICS 112)
- Food manufacturing (NAICS 311)
- Pesticide manufacturing (NAICS 32532)

This listing is not intended to be exhaustive, but rather provides a guide for readers regarding entities likely to be affected by this action. Other types of entities not listed in this unit could also be affected. The North American Industrial Classification System (NAICS) codes have been provided to assist you and others in determining whether this action might apply to certain entities. If you have any questions regarding the applicability of this action to a particular entity, consult the person listed under **FOR FURTHER INFORMATION CONTACT**.

B. How Can I Get Copies of this Document and Other Related Information?

1. *Docket*. EPA has established an official public docket for this action under docket identification ID number OPP–2003–0279. The official public docket consists of the documents specifically referenced in this action, any public comments received, and other information related to this action. Although a part of the official docket, the public docket does not include Confidential Business Information (CBI) or other information whose disclosure is restricted by statute. The official public docket is the collection of materials that is available for public viewing at the Public Information and Records Integrity Branch (PIRIB), Rm. 119, Crystal Mall #2, 1921 Jefferson Davis Hwy., Arlington, VA. This docket facility is open from 8:30 a.m. to 4 p.m., Monday through Friday, excluding legal holidays. The docket telephone number is (703) 305–5805.

2. *Electronic access*. You may access this **Federal Register** document electronically through the EPA Internet under the ''**Federal Register**'' listings at *http://www.epa.gov/fedrgstr/*. A frequently updated electronic version of 40 CFR part 180 is available at *http://www.access.gpo.gov/nara/cfr/cfrhtml_00/Title_40/4 0cfr180_00.html*, a beta site currently under development.

An electronic version of the public docket is available through EPA's electronic public docket and comment system, EPA Dockets. You may use EPA Dockets at *http://www.epa.gov/edocket/* to submit or view public comments, access the index listing of the contents of the official public docket, and to access those documents in the public docket that are available electronically. Although not all docket materials may be available electronically, you may still access any of the publicly available docket materials through the docket facility identified in Unit I.B.1. Once in the system, select ''search,'' then key in the appropriate docket ID number.

II. Background and Statutory Findings

EPA, on its own initiative, in accordance with sections 408(e) and 408 (l)(6) of the Federal Food, Drug, and Cosmetic Act (FFDCA), 21 U.S.C. 346a, is establishing tolerances for combined residues of the insecticide diflubenzuron, [*N*-[[(4-chlorophenyl)amino]carbonyl]-2,6-difluorobenzamide and its metabolites 4-chlorophenlyurea and 4-chloroaniline (CPU) and (PCA)], in or on wheat and barley grain at 0.05 parts per million (ppm), wheat and barley straw at 0.50 ppm, wheat and barley hay at 1.0 ppm, wheat milled byproducts at 0.10 ppm, and aspirated grain fractions at 30 ppm. These tolerances will expire and are revoked on December 31, 2005. EPA will publish a document in the **Federal Register** to remove the revoked tolerances from the Code of Federal Regulations.

Section 408(l)(6) of the FFDCA requires EPA to establish a time-limited tolerance or exemption from the requirement for a tolerance for pesticide chemical residues in food that will result from the use of a pesticide under an emergency exemption granted by EPA under section 18 of FIFRA. Such tolerances can be established without providing notice or period for public comment. EPA does not intend for its actions on section 18 related tolerances to set binding precedents for the application of section 408 of the FFDCA and the new safety standard to other tolerances and exemptions. Section 408(e) of the FFDCA allows EPA to establish a tolerance or an exemption from the requirement of a tolerance on its own initiative, i.e., without having received any petition from an outside party.

Section 408(b)(2)(A)(i) of the FFDCA allows EPA to establish a tolerance (the legal limit for a pesticide chemical residue in or on a food) only if EPA determines that the tolerance is ''safe.'' Section 408(b)(2)(A)(ii) of the FFDCA defines ''safe'' to mean that ''there is a reasonable certainty that no harm will result from aggregate exposure to the pesticide chemical residue, including all anticipated dietary exposures and all other exposures for which there is reliable information.'' This includes exposure through drinking water and in residential settings, but does not include occupational exposure. Section 408(b)(2)(C) of the FFDCA requires EPA to give special consideration to exposure of infants and children to the pesticide chemical residue in establishing a tolerance and to ''ensure that there is a reasonable certainty that no harm will result to infants and children from aggregate exposure to the pesticide chemical residue. . . .''

Section 18 of the FIFRA authorizes EPA to exempt any Federal or State agency from any provision of FIFRA, if EPA determines that ''emergency conditions exist which require such exemption.'' This provision was not amended by the Food Quality Protection Act of (FQPA) 1996. EPA has established regulations governing such emergency exemptions in 40 CFR part 166.

III. Emergency Exemptions for Diflubenzuron on Wheat and Barley and FFDCA Tolerances

The requesting States (Idaho, Montana, and Washington) are experiencing severe outbreaks of grasshoppers in their wheat and barley fields this year. In most areas, densities of grasshoppers have reached 40 or more per square yard, and without the use of diflubenzuron, the Applicants estimate that yield could drop by 50%,

resulting in severe crop devastation and significant economic impact to wheat and barley producers in these States. It is believed that the mild winters over the last several years have allowed grasshopper nymphs to survive the winter and multiply more rapidly in the spring, leading to population explosions of grasshoppers to levels of up to 60 grasshoppers per square foot in some cases. The Applicants state that materials registered for grasshopper control either are not effective with populations at the current levels, are toxic to beneficial insects, or provide insufficient residual control, given the outbreak levels of grasshopper infestation. Under the crisis provisions (40 CFR 166.40) of section 18 of FIFRA the Applicants used diflubenzuron on wheat and barley for control of grasshoppers.

As part of its assessment of this emergency exemption, EPA assessed the potential risks presented by residues of diflubenzuron in or on barley and wheat commodities. In doing so, EPA considered the safety standard in section 408(b)(2) of the FFDCA, and EPA decided that the necessary tolerance under section 408(l)(6) of the FFDCA would be consistent with the safety standard and with FIFRA section 18. Consistent with the need to move quickly on the emergency exemption in order to address an urgent non-routine situation and to ensure that the resulting food is safe and lawful, EPA is issuing this tolerance without notice and opportunity for public comment as provided in section 408(l)(6) of the FFDCA. Although this tolerance will expire and is revoked on December 31, 2005, under section 408(l)(5) of the FFDCA, residues of the pesticide not in excess of the amounts specified in the tolerances remaining in or on barley and wheat commodities after that date will not be unlawful, provided it is demonstrated pursuant to section 408(l)(5) that the residues are the result of the application or the use of a pesticide at a time and in a manner that was lawful under FIFRA, and the residues do not exceed levels that were authorized by these tolerances at the time of that application or use. EPA will take action to revoke these tolerances earlier if any experience with, scientific data on, or other relevant information on this pesticide indicate that the residues they allow are not safe.

Because these tolerances are being approved under emergency conditions, EPA has not made any decisions about whether diflubenzuron meets EPA's registration requirements for use on barley and wheat or whether permanent tolerances for these uses would be appropriate. Under these circumstances, EPA does not believe that these tolerances serve as a basis for registration of diflubenzuron by a State for special local needs under FIFRA section 24(c). Nor does this tolerance serve as the basis for any States other than Montana, Washington, and Idaho to use this pesticide on this crop under section 18 of FIFRA without following all provisions of EPA's regulations implementing FIFRA section 18 as identified in 40 CFR part 166. For additional information regarding the emergency exemption for diflubenzuron, contact the Agency's Registration Division at the address provided under **FOR FURTHER INFORMATION CONTACT**.

IV. Aggregate Risk Assessment and Determination of Safety

EPA performs a number of analyses to determine the risks from aggregate exposure to pesticide residues. For further discussion of the regulatory requirements of section 408 of the FFDCA and a complete description of the risk assessment process, see the final rule on Bifenthrin Pesticide Tolerances November 26, 1997 (62 FR 62961) (FRL–5754–7).

Consistent with section 408(b)(2)(D) of the FFDCA , EPA has reviewed the available scientific data and other relevant information in support of this action. EPA has sufficient data to assess the hazards of diflubenzuron and to make a determination on aggregate exposure, consistent with section 408(b)(2) of the FFDCA, for time-limited tolerances for combined residues of diflubenzuron in or on wheat and barley grain at 0.05 ppm, wheat and barley straw at 0.50 ppm, wheat and barley hay at 1.0 ppm, wheat milled byproducts at 0.10 ppm, and aspirated grain fractions at 30 ppm.

EPA has received objections to a separate tolerance-setting involving the use of diflubenzuron on pears. These objections were filed by the Natural Resources Defense Council (NRDC) and raised several issues regarding aggregate exposure estimates and the additional safety factor for the protection of infants and children. Although that proceeding remains ongoing, EPA has considered whether it is appropriate to establish the emergency exemption tolerances for diflubenzuron on wheat and barley commodities while the objections are still pending.

Factors taken into account by EPA included how close the Agency is to concluding the proceedings on the objections, the nature of the current action, whether NRDC's objections raised non-frivolous issues, and the extent to which the issues raised by NRDC had already been considered by EPA. Although NRDC's objections are not frivolous, the other factors all support establishing these tolerances at this time. First, the objections proceeding is unlikely to conclude prior to when action is necessary on this petition. [NRDC's objections raise complex legal, scientific, policy, and factual matters and EPA initiated a 60 day public comment period on them in the **Federal Register** on June 19, 2002 (67 FR 41628) (FRL–7167–7). That comment period was extended until October 16, 2002 in the **Federal Register** of September 17, 2002 (67 FR 58536) (FRL–7275–3),] and EPA is now examining the extensive comments received. Moreover, NRDC itself submitted further information to the Agency in June 2003, and the Agency is in the process of evaluating that information as well. Second, the nature of the current actions are extremely time-sensitive as they address emergency situations. Third, the issues raised by NRDC are not new matters but questions that already have been the subject of considerable evaluation by EPA and comment by stakeholders. Accordingly, EPA is proceeding with establishing these tolerances for diflubenzuron. EPA has determined at this time that these tolerances rest on a reasonable certainty that no harm will result from aggregate exposure to the pesticide chemical residues involved. As suggested above, if during the life of these tolerances EPA determines that any experience with, scientific data on, or other relevant information on this pesticide indicates that the residues these tolerances allow are not safe, EPA will take action to revoke the tolerances prior to their otherwise applicable expiration date. The action EPA is taking at this time should not be construed to constitute action on NRDC's aforesaid objections. The Agency continues to consider those objections and information concerning them, including the new information which NRDC submitted in June 2003.

The most recent estimated aggregate risks resulting from the use of diflubenzuron, are discussed in the **Federal Register** of September 19, 2002 (67 FR 59017) (FRL–7200–4), final rule establishing tolerances for residues of diflubenzuron in/on grass forage, fodder, and hay; peppers; stone fruits; and tree nuts. In that prior action, risk was estimated using anticipated residue (AR) information based on field trial data and percent crop treated (PCT) information for some commodities. Available residue data indicate that the

use pattern for these emergency exemptions will not result in residues of diflubenzuron in excess of the following levels: Wheat and barley grain at 0.05 ppm, wheat and barley straw at 0.50 ppm, wheat and barley hay at 1.0 ppm, wheat milled byproducts at 0.10 ppm, and aspirated grain fractions at 30 ppm.

Therefore, tolerances are being established for these commodities at these levels. The risk assessment related to incremental addition of these items at this level to dietary exposure is discussed below. Refer also to the September 19, 2002 **Federal Register** document for a detailed discussion of the aggregate risk assessments and determination of safety. EPA relies in part upon that risk assessment and the findings made in that **Federal Register** document in support of this action. Below is a brief summary of the aggregate risk assessment.

EPA has evaluated the available toxicity data and considered its validity, completeness, and reliability as well as the relationship of the results of the studies to human risk. EPA has also considered available information concerning the variability of the sensitivities of major identifiable subgroups of consumers, including infants and children. A summary of the toxicological dose and endpoints for diflubenzuron for use in human risk assessment is discussed in the final rule mentioned above, published in the **Federal Register** of September 19, 2002 (67 FR 59017) (FRL–7200–4).

EPA assessed risk scenarios for diflubenzuron under chronic exposures only. Chronic risk estimates were calculated for the residues of toxicological concern, the parent compound of the insecticide diflubenzuron (*N*-[[4-chlorophenyl)amino]-carbonyl]-2,6-difluorobenzamide) and its metabolites, CPU and PCA. For the chronic analysis, ARs and PCT information for some commodities were also used. An acute dietary exposure analysis was not performed, because there were no acute toxicological endpoints identified (no effects of concern occurring as a result of a 1 day or single exposure). Short-term aggregate exposure, which takes into account residential exposure plus chronic exposure, was not assessed since diflubenzuron is not registered for use on any sites that would result in substantial residential exposure. Intermediate-term aggregate exposure, which takes into account residential exposure plus chronic exposure to food and water was not assessed, because intermediate-term exposure to diflubenzuron would not be expected from the registered and proposed use patterns. Aggregate cancer risk for the U.S. population was assessed, since the metabolite, CPU, is of concern for aggregate cancer risk and could be found in drinking water.

A refined, chronic dietary exposure assessment was conducted for the general U.S. population and various population subgroups using the Dietary Exposure Evaluation Model (DEEM™) Version 1.3. software with the Food Commodity Intake Database (FCID). The chronic analysis was performed using ARs and PCT information for several registered plant and livestock commodities, and recommended tolerance-level residues and 100% CT information for all proposed commodities. The chronic dietary exposure estimates are below levels of concern (<100% of the chronic population adjusted dose (cPAD)) for that general U.S. population and all population subgroups. The most highly exposed population subgroups are all infants <1 year old and children 1–2 years old (both at 3% of the cPAD).

A cancer dietary exposure assessment from consumption of PCA and CPU was conducted in the previous risk assessment. Based on the submitted metabolism studies, there are two possible sources for dietary exposure to PCA and CPU: Residues in fungi (mushrooms), and residues in animal commodities (milk and liver). As the wheat and barley uses will not result in additional dietary exposure to PCA and CPU, an updated cancer dietary exposure assessment was not needed to support the current section 18 request. The results of the previous cancer analysis indicated that the estimated cancer dietary risk associated with the use of diflubenzuron is below the Agency's level of concern

Dietary exposure from drinking water. For the current use on wheat and barley, a chronic aggregate exposure (food + drinking water) assessment was performed. Acute, short-term and intermediate-term aggregate risk assessments were not performed because an acute dietary endpoint was not selected and there are no registered or proposed non-food uses resulting in significant residential exposure, respectively. A cancer aggregate exposure (food + drinking water) assessment was not conducted because, as mentioned above, the current uses will not result in additional dietary exposure to CPU.

Since EPA does not have ground water and surface water monitoring data to calculate a quantitative aggregate exposure, Drinking Water Levels of Concern (DWLOCs) were calculated. A DWLOC is a theoretical upper limit on a pesticide's concentration in drinking water in light of total aggregate exposure to a pesticide in food, drinking water, and through residential uses. A DWLOC will vary depending on the toxic endpoint, drinking water consumption, body weights, and pesticide uses. Different populations will have different DWLOCs. EPA uses DWLOCs in the risk assessment process to assess potential concern for exposure associated with pesticides in drinking water. DWLOC values are not regulatory standards for drinking water. To calculate DWLOCs, the dietary food estimates (from DEEM™-FCID) were subtracted from the population adjusted dose (PAD) value to obtain the maximum water exposure level. DWLOCs were then calculated using the standard body weights and drinking water consumption figures: 70kg/2L (U.S. population and adult male), 60 kg/2L (adult female and youth), and 10kg/1L (infants and children). For chronic dietary exposure, EPA's level of concern is exceeded when estimated dietary risk exceeds 100% of the cPAD.

The chronic drinking water assessment resulted in chronic DWLOCs for the overall U.S. population of 690 parts per billion (ppb), and for all infants (<1 year old) and children (1–2 years) of 190 ppb (the population subgroups with the lowest DWLOC). All chronic DWLOCs were well above the chronic estimated environmental concentration (EEC) for ground water of 0.067 ppb. The chronic DWLOCs were also above the chronic EEC for surface water of 0.32 ppb.

Thus, results of the chronic analysis indicate that the estimated chronic dietary risk associated with the proposed use of diflubenzuron is below levels of concern, and chronic aggregate risk estimates are also below the level of concern.

Based on these risk assessments, EPA concludes that there is a reasonable certainty that no harm will result to the general population, and to infants and children from aggregate exposure to diflubenzuron residues.

V. Other Considerations

A. Analytical Enforcement Methodology

Adequate methods are available for the analysis of diflubenzuron, PCA, and CPU in crops. Three enforcement methods for diflubenzuron are published in the Pesticide Analytical Method Volume II (PAM II) as Methods I, II, and III.

B. International Residue Limits

There are no Codex proposals, Canadian, or Mexican limits for residues

of diflubenzuron on wheat and barley commodities. Therefore there are no compatibility issues associated with the proposed tolerances.

C. Conditions

One application per growing season may be made of the pesticide, diflubenzuron, to wheat and barley, at a rate of 2.0 fl. oz. product (0.44 fl. oz. of active ingredient) per acre. Applications may be made by ground or aerial equipment. A preharvest interval of 45 days must be observed, and all label directions on the federally registered label, as well as the section 18 use directions must be followed.

VI. Conclusion

Therefore, the tolerance is established for combined residues of diflubenzuron, and its metabolites CPU and PCA, in or on wheat and barley grain at 0.05 ppm, wheat and barley straw at 0.50 ppm, wheat and barley hay at 1.0 ppm, wheat milled byproducts at 0.10 ppm, and aspirated grain fractions at 30 ppm.

VII. Objections and Hearing Requests

Under section 408(g) of the FFDCA, as amended by the FQPA, any person may file an objection to any aspect of this regulation and may also request a hearing on those objections. The EPA procedural regulations which govern the submission of objections and requests for hearings appear in 40 CFR part 178. Although the procedures in those regulations require some modification to reflect the amendments made to the FFDCA by the FQPA, EPA will continue to use those procedures, with appropriate adjustments, until the necessary modifications can be made. The new section 408(g) of the FFDCA provides essentially the same process for persons to ''object'' to a regulation for an exemption from the requirement of a tolerance issued by EPA under new section 408(d) of the FFDCA, as was provided in the old sections 408 and 409 of the FFDCA. However, the period for filing objections is now 60 days, rather than 30 days.

A. What Do I Need To Do To File an Objection or Request a Hearing?

You must file your objection or request a hearing on this regulation in accordance with the instructions provided in this unit and in 40 CFR part 178. To ensure proper receipt by EPA, you must identify docket ID number OPP–2003–0279 in the subject line on the first page of your submission. All requests must be in writing, and must be mailed or delivered to the Hearing Clerk on or before October 27, 2003.

1. *Filing the request.* Your objection must specify the specific provisions in the regulation that you object to, and the grounds for the objections (40 CFR 178.25). If a hearing is requested, the objections must include a statement of the factual issues(s) on which a hearing is requested, the requestor's contentions on such issues, and a summary of any evidence relied upon by the objector (40 CFR 178.27). Information submitted in connection with an objection or hearing request may be claimed confidential by marking any part or all of that information as CBI. Information so marked will not be disclosed except in accordance with procedures set forth in 40 CFR part 2. A copy of the information that does not contain CBI must be submitted for inclusion in the public record. Information not marked confidential may be disclosed publicly by EPA without prior notice.

Mail your written request to: Office of the Hearing Clerk (1900C), Environmental Protection Agency, 1200 Pennsylvania Ave., NW., Washington, DC 20460–0001. You may also deliver your request to the Office of the Hearing Clerk in Rm.104, Crystal Mall #2, 1921 Jefferson Davis Hwy., Arlington, VA. The Office of the Hearing Clerk is open from 8 a.m. to 4 p.m., Monday through Friday, excluding legal holidays. The telephone number for the Office of the Hearing Clerk is (703) 603–0061.

2. *Tolerance fee payment.* If you file an objection or request a hearing, you must also pay the fee prescribed by 40 CFR 180.33(i) or request a waiver of that fee pursuant to 40 CFR 180.33(m). You must mail the fee to: EPA Headquarters Accounting Operations Branch, Office of Pesticide Programs, P.O. Box 360277M, Pittsburgh, PA 15251. Please identify the fee submission by labeling it ''Tolerance Petition Fees.''

EPA is authorized to waive any fee requirement ''when in the judgement of the Administrator such a waiver or refund is equitable and not contrary to the purpose of this subsection.'' For additional information regarding the waiver of these fees, you may contact James Tompkins by phone at (703) 305–5697, by e-mail at *tompkins.jim@epa.gov*, or by mailing a request for information to Mr. Tompkins at Registration Division (7505C), Office of Pesticide Programs, Environmental Protection Agency, 1200 Pennsylvania Ave., NW., Washington, DC 20460–0001.

If you would like to request a waiver of the tolerance objection fees, you must mail your request for such a waiver to: James Hollins, Information Resources and Services Division (7502C), Office of Pesticide Programs, Environmental Protection Agency, 1200 Pennsylvania Ave., NW., Washington, DC 20460–0001.

3. *Copies for the Docket.* In addition to filing an objection or hearing request with the Hearing Clerk as described in Unit VII.A., you should also send a copy of your request to the PIRIB for its inclusion in the official record that is described in Unit I.B.1. Mail your copies, identified by the docket ID number OPP–2003–0279, to: Public Information and Records Integrity Branch, Information Resources and Services Division (7502C), Office of Pesticide Programs, Environmental Protection Agency, 1200 Pennsylvania Ave., NW., Washington, DC 20460–0001. In person or by courier, bring a copy to the location of the PIRIB described in Unit I.B.1. You may also send an electronic copy of your request via e-mail to: *opp-docket@epa.gov*. Please use an ASCII file format and avoid the use of special characters and any form of encryption. Copies of electronic objections and hearing requests will also be accepted on disks in WordPerfect 6.1/8.0 or ASCII file format. Do not include any CBI in your electronic copy. You may also submit an electronic copy of your request at many Federal Depository Libraries.

B. When Will the Agency Grant a Request for a Hearing?

A request for a hearing will be granted if the Administrator determines that the material submitted shows the following: There is a genuine and substantial issue of fact; there is a reasonable possibility that available evidence identified by the requestor would, if established resolve one or more of such issues in favor of the requestor, taking into account uncontested claims or facts to the contrary; and resolution of the factual issues(s) in the manner sought by the requestor would be adequate to justify the action requested (40 CFR 178.32).

VIII. Statutory and Executive Order Reviews

This final rule establishes time-limited tolerances under section 408 of the FFDCA. The Office of Management and Budget (OMB) has exempted these types of actions from review under Executive Order 12866, entitled *Regulatory Planning and Review* (58 FR 51735, October 4, 1993). Because this rule has been exempted from review under Executive Order 12866 due to its lack of significance, this rule is not subject to Executive Order 13211, *Actions Concerning Regulations That Significantly Affect Energy Supply, Distribution, or Use* (66 FR 28355, May 22, 2001). This final rule does not

contain any information collections subject to OMB approval under the Paperwork Reduction Act (PRA), 44 U.S.C. 3501 *et seq.*, or impose any enforceable duty or contain any unfunded mandate as described under Title II of the Unfunded Mandates Reform Act of 1995 (UMRA) (Public Law 104–4). Nor does it require any special considerations under Executive Order 12898, entitled *Federal Actions to Address Environmental Justice in Minority Populations and Low-Income Populations* (59 FR 7629, February 16, 1994); or OMB review or any Agency action under Executive Order 13045, entitled *Protection of Children from Environmental Health Risks and Safety Risks* (62 FR 19885, April 23, 1997). This action does not involve any technical standards that would require Agency consideration of voluntary consensus standards pursuant to section 12(d) of the National Technology Transfer and Advancement Act of 1995 (NTTAA), Public Law 104–113, section 12(d) (15 U.S.C. 272 note). Since tolerances and exemptions that are established on the basis of a FIFRA section 18 exemption under section 408 of the FFDCA, such as the tolerances in this final rule, do not require the issuance of a proposed rule, the requirements of the Regulatory Flexibility Act (RFA) (5 U.S.C. 601 *et seq.*) do not apply. In addition, the Agency has determined that this action will not have a substantial direct effect on States, on the relationship between the national government and the States, or on the distribution of power and responsibilities among the various levels of government, as specified in Executive Order 13132, entitled *Federalism* (64 FR 43255, August 10, 1999). Executive Order 13132 requires EPA to develop an accountable process to ensure ''meaningful and timely input by State and local officials in the development of regulatory policies that have federalism implications.'' ''Policies that have federalism implications'' is defined in the Executive Order to include regulations that have ''substantial direct effects on the States, on the relationship between the national government and the States, or on the distribution of power and responsibilities among the various levels of government.'' This final rule directly regulates growers, food processors, food handlers, and food retailers, not States. This action does not alter the relationships or distribution of power and responsibilities established by Congress in the preemption provisions of section 408(n)(4) of the FFDCA. For these same reasons, the Agency has determined that this rule does not have any ''tribal implications'' as described in Executive Order 13175, entitled *Consultation and Coordination with Indian Tribal Governments* (65 FR 67249, November 6, 2000). Executive Order 13175, requires EPA to develop an accountable process to ensure ''meaningful and timely input by tribal officials in the development of regulatory policies that have tribal implications.'' ''Policies that have tribal implications'' is defined in the Executive Order to include regulations that have ''substantial direct effects on one or more Indian tribes, on the relationship between the Federal Government and the Indian tribes, or on the distribution of power and responsibilities between the Federal Government and Indian tribes.'' This rule will not have substantial direct effects on tribal governments, on the relationship between the Federal Government and Indian tribes, or on the distribution of power and responsibilities between the Federal Government and Indian tribes, as specified in Executive Order 13175. Thus, Executive Order 13175 does not apply to this rule.

IX. Congressional Review Act

The Congressional Review Act, 5 U.S.C. 801 *et seq.*, as added by the Small Business Regulatory Enforcement Fairness Act of 1996, generally provides that before a rule may take effect, the agency promulgating the rule must submit a rule report, which includes a copy of the rule, to each House of the Congress and to the Comptroller General of the United States. EPA will submit a report containing this rule and other required information to the U.S. Senate, the U.S. House of Representatives, and the Comptroller General of the United States prior to publication of this final rule in the **Federal Register**. This final rule is not a ''major rule'' as defined by 5 U.S.C. 804(2).

List of Subjects in 40 CFR Part 180

Environmental protection, Administrative practice and procedure, Agricultural commodities, Pesticides and pests, Reporting and recordkeeping requirements.

Dated: August 18, 2003.

Debra Edwards,

Director, Registration Division, Office of Pesticide Programs.

■ Therefore, 40 CFR chapter I is amended as follows:

PART 180—[AMENDED]

■ 1. The authority citation for part 180 continues to read as follows:

Authority: 21 U.S.C. 321(q), 346(a) and 371.

■ 2. Section 180.377 is amended by revising the table in paragraph (b) to read as follows:

§ 180.377 Diflubenzuron; tolerances for residues.

* * * * *

(b) * * *

Commodity	Parts per million	Expiration/revocation date
Alfalfa, forage ...	6.0	6/30/04
Alfalfa, hay	6.0	6/30/04
Barley, grain	0.05	12/31/05
Barley, hay	1.0	12/31/05
Barley, straw	0.50	12/31/05
Wheat, aspirated grain fractions	30	12/31/05
Wheat, grain	0.05	12/31/05
Wheat, hay	1.0	12/31/05
Wheat, milled byproducts	0.10	12/31/05
Wheat, straw	0.50	12/31/05

* * * * *

[FR Doc. 03–21935 Filed 8–26–03; 8:45 am]

BILLING CODE 6560–50–S

ENVIRONMENTAL PROTECTION AGENCY

40 CFR Part 272

[FRL–7479–5]

New Mexico: Incorporation by Reference of Approved State Hazardous Waste Management Program

AGENCY: Environmental Protection Agency (EPA).

ACTION: Immediate final rule.

SUMMARY: The Resource Conservation and Recovery Act (RCRA), allows the Environmental Protection Agency (EPA) to authorize States to operate their hazardous waste management programs in lieu of the Federal program. EPA uses the regulations entitled ''Approved State Hazardous Waste Management Programs'' to provide notice of the authorization status of State programs and to incorporate by reference those provisions of the State statutes and regulations that will be subject to EPA's inspection and enforcement. The rule codifies in the regulations the prior approval of New Mexico's hazardous waste management program and incorporates by reference authorized

provisions of the State's statutes and regulations.

DATES: This regulation is effective October 27, 2003, unless EPA receives adverse written comment on this regulation by the close of business September 26, 2003. If EPA receives such comments, it will publish a timely withdrawal of this immediate final rule in the **Federal Register** informing the public that this rule will not take effect. The incorporation by reference of authorized provisions in the New Mexico statutes and regulations contained in this rule is approved by the Director of the Federal Register as of October 27, 2003 in accordance with 5 U.S.C. 552(a) and 1 CFR part 51.

ADDRESSES: Send written comments referring to Docket Number NM–01–02 to Alima Patterson, Region 6 Authorization Coordinator, Grants and Authorization Section (6PD–G), Multimedia Planning and Permitting Division, EPA Region 6, 1445 Ross Avenue, Dallas, Texas 75202–2733, Phone number: (214) 665–8533. You can inspect the records related to this codification effort from 8:30 a.m. to 4 p.m. Monday through Friday in the EPA Region 6 1445 Ross Avenue, Dallas, Texas 75202–2733, Phone number: (214) 665–6444.

FOR FURTHER INFORMATION CONTACT: Alima Patterson, Region 6 Authorization Coordinator, Grants and Authorization Section (6PD–G), Multimedia Planning and Permitting Division, EPA Region 6, 1445 Ross Avenue, Dallas, Texas 75202–2733, Phone number: (214) 665–8533.

SUPPLEMENTARY INFORMATION:

A. What Is Codification?

Codification is the process of placing a State's statutes and regulations that comprise the State's authorized hazardous waste management program into the Code of Federal Regulations (CFR). Section 3006(b) of RCRA, as amended, allows the Environmental Protection Agency (EPA) to authorize State hazardous waste management programs to operate in lieu of the Federal hazardous waste management regulatory program. EPA codifies its authorization of State programs in 40 CFR part 272 and incorporates by reference State statutes and regulations that EPA will enforce under sections 3007 and 3008 of RCRA and any other applicable statutory provisions.

The incorporation by reference of State authorized programs in the CFR should substantially enhance the public's ability to discern the current status of the authorized State program and State requirements that can be Federally enforced. This effort provides clear notice to the public of the scope of the authorized program in each State.

B. What Is the History of the Authorization and Codification of New Mexico's Hazardous Waste Management Program?

New Mexico initially received Final authorization effective January 25, 1985, (50 FR 1515) to implement its Base Hazardous Waste Management program. Subsequently, the EPA approved additional program revision applications effective April 10, 1990 (55 FR 4604); July 25, 1990 (55 FR 28397); December 4, 1992 (57 FR 45717); August 23, 1994 (59 FR 29734); December 21, 1994 (59 FR 51122); July 10, 1995 (60 FR 20238); January 2, 1996 (60 FR 53708) as affirmed by EPA in the **Federal Register** notice published on January 26, 1996 (61 FR 2450)); and March 10, 1997 (61 FR 67474). The EPA incorporated by reference New Mexico's then authorized hazardous waste program effective December 13, 1993 (58 FR 52677); August 21, 1995 (60 FR 32113); November 18, 1996 (61 FR 49265); and July 13, 1998 (63 FR 23224). Effective October 9, 2001 (66 FR 42140), EPA granted authorization to New Mexico for additional program revisions. In this document, EPA is approving a conforming change to the New Mexico regulations at Title 20, Chapter 4, Part 1, New Mexico Administrative code, section 20.4.1.1103, and incorporating by reference the authorized State hazardous waste program in New Mexico. The State's provision at section 20.4.1103 clarifies that references to any provisions of 40 CFR Part 280 within the text of any other provision of 40 CFR as adopted in Part 1 would mean the New Mexico Underground Storage Tank Regulations, 20 NMAC 5.1 through 5.16.

C. What Decisions Have We Made in This Rule?

The purpose of today's **Federal Register** document is to codify New Mexico's base hazardous waste management program and its revisions to that program. EPA provided notices and opportunity for comments on the Agency's decisions to authorize the New Mexico program, and EPA is not now reopening the decisions, nor requesting comments, on the New Mexico authorizations as published in the **Federal Register** notices specified in Section B of this document.

This document incorporates by reference New Mexico's hazardous waste statutes and regulations and clarifies which of these provisions are included in the authorized and Federally enforceable program. By codifying New Mexico's authorized program and by amending the Code of Federal Regulations, the public will be more easily able to discern the status of Federally approved requirements of the New Mexico hazardous waste management program.

The EPA is incorporating by reference the New Mexico authorized hazardous waste program in subpart GG of 40 CFR part 272. Section 272.1601 incorporates by reference New Mexico's authorized hazardous waste statutes and regulations. Section 272.1601 also references the statutory provisions (including procedural and enforcement provisions) which provide the legal basis for the State's implementation of the hazardous waste management program, the Memorandum of Agreement, the Attorney General's Statements and the Program Description, which are approved as part of the hazardous waste management program under Subtitle C of RCRA.

D. What Is the Effect of New Mexico's Codification on Enforcement?

The EPA retains its authority under statutory provisions, including but not limited to, RCRA sections 3007, 3008, 3013 and 7003, and other applicable statutory and regulatory provisions to undertake inspections and enforcement actions and to issue orders in authorized States. With respect to these actions, the EPA will rely on Federal sanctions, Federal inspection authorities, and Federal procedures rather than any authorized State analogues to these provisions. Therefore, the EPA is not incorporating by reference such particular, approved New Mexico procedural and enforcement authorities. Section 272.1601(b)(2) of 40 CFR lists the statutory provisions which provide the legal basis for the State's implementation of the hazardous waste management program, as well as those procedural and enforcement authorities that are part of the State's approved program, but these are not incorporated by reference.

E. What State Provisions Are Not Part of the Codification?

The public needs to be aware that some provisions of New Mexico's hazardous waste management program are not part of the Federally authorized State program. These non-authorized provisions include:

(1) provisions that are not part of the RCRA subtitle C program because they are ''broader in scope'' than RCRA subtitle C (*see* 40 CFR 271.1(i));

(2) Federal rules for which New Mexico is not authorized, but which have been incorporated into the State

regulations because of the way the State adopted Federal regulations by reference.

State provisions that are ''broader in scope'' than the Federal program are not part of the RCRA authorized program and EPA will not enforce them. Therefore, they are not incorporated by reference in 40 CFR part 272. For reference and clarity, 40 CFR 272.1601(b)(3) lists the New Mexico regulatory provisions which are ''broader in scope'' than the Federal program and which are not part of the authorized program being incorporated by reference. ''Broader in scope'' provisions cannot be enforced by EPA; the State, however, may enforce such provisions under State law.

With respect to any requirement pursuant to the Hazardous and Solid Waste Amendments of 1984 (HSWA) for which the State has not yet been authorized, EPA will continue to enforce the Federal HSWA standards until the State is authorized for these provisions.

F. What Will Be the Effect of Federal HSWA Requirements on the Codification?

The EPA is not amending 40 CFR part 272 to include HSWA requirements and prohibitions that are implemented by EPA. Section 3006(g) of RCRA provides that any HSWA requirement or prohibition (including implementing regulations) takes effect in authorized and not authorized States at the same time. A HSWA requirement or prohibition supersedes any less stringent or inconsistent State provision which may have been previously authorized by EPA (50 FR 28702, July 15, 1985). EPA has the authority to implement HSWA requirements in all States, including authorized States, until the States become authorized for such requirement or prohibition. Authorized States are required to revise their programs to adopt the HSWA requirements and prohibitions, and then to seek authorization for those revisions pursuant to 40 CFR part 271.

Instead of amending the 40 CFR part 272 every time a new HSWA provision takes effect under the authority of RCRA section 3006(g), EPA will wait until the State receives authorization for its analog to the new HSWA provision before amending the State's 40 CFR part 272 incorporation by reference. Until then, persons wanting to know whether a HSWA requirement or prohibition is in effect should refer to 40 CFR 271.1(j), as amended, which lists each such provision.

Some existing State requirements may be similar to the HSWA requirement implemented by EPA. However, until EPA authorizes those State requirements, EPA can only enforce the HSWA requirements and not the State analogs. EPA will not codify those State requirements until the State receives authorization for those requirements.

G. Administrative Requirements

The Office of Management and Budget (OMB) has exempted this action from the requirements of Executive Order 12866 (58 FR 51735, October 4, 1993), and therefore this action is not subject to review by OMB. This rule incorporates by reference New Mexico's authorized hazardous waste management regulations and does not impose new burdens on small entities. Accordingly, I certify that this action will not have a significant economic impact on a substantial number of small entities under the Regulatory Flexibility Act (5 U.S.C. 601 *et seq.*). Because this rule merely incorporates by reference certain existing State hazardous waste management program requirements which EPA already approved under 40 CFR part 271, and with which regulated entities must already comply, it does not contain any unfunded mandate or significantly or uniquely affect small governments, as described in the Unfunded Mandates Reform Act of 1995 (Pub. L. 104–4). For the same reason, this action also does not have tribal implications within the meaning of Executive Order 13175 (65 FR 67249, November 6, 2000). It does not have substantial direct effects on tribal governments, on the relationship between the Federal government and the Indian tribes, or on the distribution of power and responsibilities between the Federal government and Indian tribes, as specified in Executive Order 13175. This action will not have substantial direct effects on the States, on the relationship between the Federal government and the States, or on the distribution of power and responsibilities among the various levels of government, as specified in Executive Order 13132 (64 FR 43255, August 10, 1999), because it merely incorporates by reference existing authorized State hazardous waste management program requirements without altering the relationship or the distribution of power and responsibilities established by RCRA. This action also is not subject to Executive Order 13045 (62 FR 19885, April 23, 1997), because it is not economically significant and it does not make decisions based on environmental health or safety risks. This rule is not subject to Executive Order 13211, ''Actions Concerning Regulations That Significantly Affect Energy Supply, Distribution, or Use'' (66 FR 28355 (May 22, 2001)) because it is not a significant regulatory action under Executive Order 12866.

The requirements being codified are the result of New Mexico's voluntary participation in EPA's State program authorization process under RCRA Subtitle C. Thus, the requirements of section 12(d) of the National Technology Transfer and Advancement Act of 1995 (15 U.S.C. 272 note) do not apply. As required by section 3 of Executive Order 12988 (61 FR 4729, February 7, 1996), in issuing this rule, EPA has taken the necessary steps to eliminate drafting errors and ambiguity, minimize potential litigation, and provide a clear legal standard for affected conduct. EPA has complied with Executive Order 12630 (53 FR 8859, March 15, 1988) by examining the takings implications of the rule in accordance with the ''Attorney General's Supplemental Guidelines for the Evaluation of Risk and Avoidance of Unanticipated Takings'' issued under the executive order. This rule does not impose an information collection burden under the provisions of the Paperwork Reduction Act of 1995 (44 U.S.C. 3501 *et seq.*).

The Congressional Review Act, 5 U.S.C. 801 *et seq.,* as amended by the Small Business Regulatory Enforcement Fairness Act of 1996, generally provides that before a rule may take effect, the agency promulgating the rule must submit a rule report, which includes a copy of the rule, to each House of the Congress and to the Comptroller General of the United States. EPA will submit a report containing this document and other required information to the U.S. Senate, the U.S. House of Representatives, and the Comptroller General of the United States prior to publication in the **Federal Register**. A major rule cannot take effect until 60 days after it is published in the **Federal Register**. This action is not a ''major rule'' as defined by 5 U.S.C. 804(2). This action will be effective October 27, 2003.

List of Subjects in 40 CFR Part 272

Environmental protection, Administrative practice and procedure, Confidential business information, Hazardous waste, Hazardous waste transportation, Incorporation by reference, Indian lands, Intergovernmental relations, Penalties, Reporting and recordkeeping requirements, Water pollution control, Water supply.

Authority: This action is issued under the authority of sections 2002(a), 3006 and

7004(b) of the Solid Waste Disposal Act as amended, 42 U.S.C. 6912(a), 6926, 6974(b).

Dated: March 27, 2003.

Lawrence E. Starfield,

Acting Regional Administrator, EPA Region 6.

■ For the reasons set forth in the preamble, 40 CFR part 272 is amended as follows:

PART 272—APPROVED STATE HAZARDOUS WASTE MANAGEMENT PROGRAMS

■ 1. The authority citation for part 272 continues to read as follows:

Authority: Secs. 2002(a), 3006, and 7004(b) of the Solid Waste Disposal Act, as amended by the Resource Conservation and Recovery Act, as amended, 42 U.S.C. 6912(a), 6926, and 6974(b).

■ 2. Subpart GG is amended by revising § 272.1601 to read as follows:

§ 272.1601 New Mexico State-administered Program: Final authorization.

(a) Pursuant to section 3006(b) of RCRA, 42 U.S.C. 6926(b), New Mexico has final authorization for the following elements as submitted to EPA in New Mexico's base program application for final authorization which was approved by EPA effective on January 25, 1985. Subsequent program revision applications were approved effective on April 10, 1990, July 25, 1990, December 4, 1992, August 23, 1994, December 21, 1994, July 10, 1995, January 2, 1996, March 10, 1997, and October 9, 2001.

(b) *State Statutes and Regulations.*

(1) The New Mexico regulations cited in paragraph (b)(1)(i) of this section are incorporated by reference as part of the hazardous waste management program under subtitle C of RCRA, 42 U.S.C. 6921 *et seq.* (See § 272.2).

(i) The Binder entitled ''EPA Approved New Mexico Statutory and Regulatory Requirements Applicable to the Hazardous Waste Management Program'', dated October 2001.

(ii) [Reserved]

(2) The following provisions provide the legal basis for the State's implementation of the hazardous waste management program, but they are not being incorporated by reference and do not replace Federal authorities:

(i) New Mexico Statutes 1978 Annotated, Inspection of Public Records Act, Chapter 14, Article 2, (1994 Cumulative Supplement), sections 14–2–1 *et seq.*

(ii) New Mexico Statutes 1978 Annotated, Hazardous Waste Act, Chapter 74, Article 4, (1993 Replacement Pamphlet), sections 74–4–4 (except 74–4–4C), 74–4–4.1, 74–4–4.2C through 74–4–4.2F, 74–4–4.2G(1), 74–4–4.2H, 74–4–4.2I, 74–4–4.3 (except 74–4–4.3A(2) and 74–4–4.3F), 74–4–4.7B, 74–4–4.7C, 74–4–5, 74–4–7, 74–4–10, 74–4–10.1 (except 74–4–10.1C), 74–4–11 through 74–4–14.

(iii) Title 20, Chapter 4, part 1, New Mexico Administrative Code, effective June 14, 2000, sections 20.4.1.901 (except 20.4.1.901.B.1 through 20.4.1.901.B.6 and 20.4.1.901.E), 20.4.1.1100, 20.4.1.1104, 20.4.1.1105, and 20.4.1.1107.

(3)(i) The following statutory and regulatory provisions are broader in scope than the Federal program, are not part of the authorized program, and are not incorporated by reference:

(ii) New Mexico Statutes 1978 Annotated, Hazardous Waste Act, Chapter 74, Article 4, (1993 Replacement Pamphlet), sections 74–4–3.3 and 74–4–4.2J.

(4) *Unauthorized State Amendments.*—(i) The State's adoption of the Federal rules listed in the following table is not approved by EPA and are, therefore, not enforceable:

Federal requirement	**Federal Register** reference	Publication date
Biennial Report	48 FR 3977	01/28/83
Permit Rules; Settlement Agreement	48 FR 39611	09/01/83
Interim Status Standards; Applicability	48 FR 52718	11/22/83
Chlorinated Aliphatic Hydrocarbon Listing (F024)	49 FR 5308	02/10/84
National Uniform Manifest	49 FR 10490	03/20/84
Recycled Used Oil Management Standards	57 FR 41566: Amendments to 40 CFR parts 260, 261 and 266.	09/10/92
	58 FR 26420: Amendments to 40 CFR parts 261, 264 and 265.	05/03/93
	58 FR 33341: Amendments to 40 CFR parts 261, 264 and 265.	06/17/93
	63 FR 24963: Amendments to 40 CFR part 261	05/06/98
Revision of Conditional Exemption for Small Scale Treatability Studies.	59 FR 8362	02/18/94
Letter of Credit Revision	59 FR 29958	06/10/94
Universal Waste Rule, Petition Provisions to Add a New Universal Waste.	60 FR 25492	05/11/95
Recovered Used Oil Exclusion; Correction	61 FR 13103	03/26/96
Mineral Processing Secondary Materials	63 FR 28556; Amendments to 40 CFR part 261	06/26/98
Hazardous Remediation Waste Requirements (HWIR-Media), except as they apply to the standards for staging piles and to 40 CFR 264.1(j) and 264.101(d).	63 FR 65874	11/30/98

(ii) Additionally, New Mexico has adopted but is not authorized to implement the HSWA rules that are listed in the following table in lieu of EPA. EPA will continue to enforce the Federal HSWA standards for which New Mexico is not authorized until the State receives specific authorization from EPA:

Federal requirement	**Federal Register** reference	Publication date
Toxicity Characteristic; Hydrocarbon Recovery Operations	55 FR 40834	10/05/90
	56 FR 3978	02/01/91
	56 FR 13406	04/02/91
Toxicity Characteristic; Chlorofluorocarbon Refrigerants	56 FR 5910	02/13/91

Federal requirement	**Federal Register** reference	Publication date
Revisions to the Petroleum Refining Primary and Secondary Oil/Water/Solids Separation Sludge Listings (F037 and F038).	56 FR 21955	05/13/91
Boilers and Industrial Furnaces; Administrative Stay and Interim Standards for Bevill Residues.	58 FR 59598	11/09/93
Hazardous Remediation Waste Requirements (HWIR-Media), to the extent that they apply to the standards for staging piles and to 40 CFR 264.1(j) and 264.101(d).	63 FR 65874	11/30/98

(5) *Memorandum of Agreement.* The Memorandum of Agreement between EPA Region 6 and the State of New Mexico, signed by the EPA Regional Administrator on July 30, 2001, is referenced as part of the authorized hazardous waste management program under subtitle C of RCRA, 42 U.S.C. 6921 *et seq.*

(6) *Statement of Legal Authority.* ''Attorney General's Statement for Final Authorization'', signed by the Attorney General of New Mexico January, 1985, and revisions, supplements and addenda to that Statement dated April 13, 1988; September 14, 1988; July 19, 1989; July 23, 1992; February 14, 1994; July 18, 1994; July 20, 1994; August 11, 1994; November 28, 1994; August 24, 1995; and January 12, 1996; and June 14, 2000 are referenced as part of the authorized hazardous waste management program under subtitle C of RCRA, 42 U.S.C. 6921 *et seq.*

(7) *Program Description.* The Program Description and any other materials submitted as supplements thereto are referenced as part of the authorized hazardous waste management program under subtitle C of RCRA, 42 U.S.C. 6921 *et seq.*

■ 3. Appendix A to Part 272 is amended by revising the listing for ''New Mexico'' to read as follows:

Appendix A to Part 272—State Requirements

* * * * *

New Mexico

The statutory provisions include:

New Mexico Statutes 1978 Annotated, Hazardous Waste Act, Chapter 74, Article 4 (1993 Replacement Pamphlet), sections 74–4–2, 74–4–3 (except 74–4–3L, 74–4–3O and 74–4–3R), 74–4–3.1, 74–4–4.2A, 74–4–4.2B, 74–4–4.2G introductory paragraph, 74–4–4.2G(2), 74–4–4.3F, 74–4–4.7 (except 74–4–4.7B and 74–4–4.7C), 74–4–9 and 74–4–10.1C, as published by the Michie Company, Law Publishers, 1 Town Hall Square, Charlottesville, Virginia 22906–7587.

The regulatory provisions include:

Title 20, Chapter 4, part 1, New Mexico Annotated Code, effective June 14, 2000, sections 20.4.100, 20.4.1.101, 20.4.1.200, 20.4.1.300, 20.4.1.400, 20.4.1.401, 20.4.1.500, 20.4.1.501, 20.4.1.600, 20.4.1.601, 20.4.1.700, 20.4.1.800, 20.4.801, 20.4.1.900, 20.4.1.901.B.1 through 20.4.1.901.B.6, 20.4.1.901.E, 20.4.1.1000, 20.4.1.1001, 20.4.1.1102 and 20.4.1103. Copies of the New Mexico regulations can be obtained from the New Mexico Commission of Public Records, State Records Center and Archives, Administrative Law Division, 1205 Camino Carlos Rey, Santa Fe, NM 87507.

* * * * *

[FR Doc. 03–21594 Filed 8–26–03; 8:45 am]

BILLING CODE 6560–50–P

ENVIRONMENTAL PROTECTION AGENCY

40 CFR Part 272

[FRL–7479–3]

Oklahoma: Incorporation by Reference of Approved State Hazardous Waste Management Program

AGENCY: Environmental Protection Agency (EPA).

ACTION: Immediate final rule.

SUMMARY: The Resource Conservation and Recovery Act (RCRA) allows the Environmental Protection Agency (EPA) to authorize States to operate their hazardous waste management programs in lieu of the Federal program. EPA uses the regulations entitled ''Approved State Hazardous Waste Management Programs'' to provide notice of the authorization status of State programs and to incorporate by reference those provisions of the State statutes and regulations that will be subject to EPA's inspection and enforcement. The rule codifies in the regulations the prior approval of Oklahoma's hazardous waste management program and incorporates by reference authorized provisions of the State's statutes and regulations. In addition, today's document corrects technical errors made in the table of authorities published in previous authorization **Federal Register** notices for Oklahoma.

DATES: This regulation is effective October 27, 2003, unless EPA receives adverse written comment on this regulation by the close of business September 26, 2003. If EPA receives such comments, it will publish a timely withdrawal of this immediate final rule in the **Federal Register** informing the public that this rule will not take effect. The incorporation by reference of authorized provisions in the Oklahoma statutes and regulations contained in this rule is approved by the Director of the Federal Register as of October 27, 2003 in accordance with 5 U.S.C. 552(a) and 1 CFR part 51.

ADDRESSES: Send written comments referring to Docket Number OK–02–02 to Alima Patterson, Region 6 Authorization Coordinator, Grants and Authorization Section (6PD–G), Multimedia Planning and Permitting Division, EPA Region 6, 1445 Ross Avenue, Dallas, Texas 75202–2733, Phone number: (214) 665–8533. You can inspect the records related to this codification effort from 8:30 a.m. to 4 p.m. Monday through Friday in the EPA Region 6 Library, 1445 Ross Avenue, Dallas, Texas 75202–2733.

FOR FURTHER INFORMATION CONTACT: Alima Patterson, Region 6 Authorization Coordinator, Grants and Authorization Section (6PD–G), Multimedia Planning and Permitting Division, EPA Region 6, 1445 Ross Avenue, Dallas, Texas 75202–2733, Phone number: (214) 665–8533.

SUPPLEMENTARY INFORMATION:

I. Technical Corrections

A. Corrections to Previously Published Authorization **Federal Register** *Notices for Oklahoma*

There were typographical and effective date errors in the tables of authorities published as part of the following authorization notices for Oklahoma. The affected entries are as follows:

1. December 9, 1998 (63 FR 67800) authorization notice:

(a) All references to ''Sec. 2–7–104'' are corrected to ''Sec. 2–2–104'';

(b) Specific to Checklist 151 (Item 4), the second reference to ''2–7–106'' is corrected to ''2–7–107A(10)'' the corresponding effective date of ''July 1, 1994'' is corrected to ''July 1, 1993''.

2. March 29, 2000 (65 FR 16258) authorization notice:

(a) Specific to Checklist 154 (item 2) and Checklist 159 (item 7), the references to ''2–2104'' are corrected to ''Sec. 2–2–104'';

3. January 2, 2001 (66 FR 28) authorization notice:

(a) Specific to Checklist 166 (Item 1), the reference to ''2–2–106'' is corrected to ''2–7–106'' .

II. Incorporation By Reference

A. What Is Codification?

Codification is the process of placing a State's statutes and regulations that comprise the State's authorized hazardous waste management program into the Code of Federal Regulations (CFR). Section 3006(b) of RCRA, as amended, allows the Environmental Protection Agency (EPA) to authorize state hazardous waste management programs to operate in lieu of the federal hazardous waste management regulatory program. EPA codifies its authorization of the state programs in 40 CFR part 272 and incorporates by reference state statutes and regulations that EPA will enforce under sections 3007 and 3008 of RCRA and any other applicable statutory provisions.

The incorporation by reference of state authorized programs in the Code of Federal Regulations should substantially enhance the public's ability to discern the current status of the authorized state program and state requirements that can be federally enforced. This effort provides clear notice to the public of the scope of the authorized program in each state.

B. What Is the History of the Authorization and Codification of Oklahoma's Hazardous Waste Management Program?

Oklahoma received final authorization to implement its Base Hazardous Waste Management program, effective January 10, 1985, (49 FR 50362) . Subsequently, the EPA approved additional program revision applications effective on June 18, 1990 (55 FR 14280), November 27, 1990 (55 FR 39274), June 3, 1991 (56 FR 13411), November 19, 1991 (56 FR 47675), November 29, 1993 (58 FR 50854), December 21, 1994 (59 FR 51116), April 27, 1995 (60 FR 2699), March 14, 1997 (62 FR 12100), July 14, 1998 (63 FR 23673) and November 23, 1998 (63 FR 50528). The EPA incorporated by reference Oklahoma's then authorized hazardous waste program effective December 13, 1993 (58 FR 52679), July 14, 1998 (63 FR 23673) and October 25, 1999 (64 FR 46567). Effective February 8, 1999 (63 FR 67800), May 30, 2000 (65 FR 16528), July 10, 2000 (65 FR 29981), and March 5, 2001 (66 FR 28), EPA granted authorization to Oklahoma for additional program revisions. In this document, EPA is approving a change to the Oklahoma regulations at OKLA. ADMIN. CODE section 252:205–7–4, which makes it clear that transporters are prohibited from mixing or combining incompatible hazardous waste within a common container.

C. What Decisions Have We Made in This Rule?

The purpose of today's **Federal Register** document is to codify Oklahoma's base hazardous waste management program and its revisions to that program. EPA provided notices and opportunity for comments on the agency's decisions to authorize the Oklahoma program. EPA is not now reopening the decisions, nor requesting comments, on the Oklahoma authorizations as published in the **Federal Register** notices specified in Section B of this document.

This document incorporates by reference Oklahoma's hazardous waste statutes and regulations and clarifies which of these provisions are included in the authorized and federally enforceable program. By codifying Oklahoma's authorized program and by amending the Code of Federal Regulations, the public will be more easily able to discern the status of federally approved requirements of the Oklahoma hazardous waste management program.

The EPA is incorporating by reference the Oklahoma authorized hazardous waste program in subpart LL of 40 CFR part 272. 40 CFR 272.1851 incorporates by reference Oklahoma's authorized hazardous waste statutes and regulations. Section 272.1851 also references the statutory provisions (including procedural and enforcement provisions) which provide the legal basis for the state's implementation of the hazardous waste management program, the Memorandum of Agreement, the Attorney General's Statements and the Program Description, which are approved as part of the hazardous waste management program under Subtitle C of RCRA.

D. What Is the Effect of Oklahoma's Codification on Enforcement?

The EPA retains its authority under statutory provisions, including but not limited to, RCRA sections 3007, 3008, 3013 and 7003, and other applicable statutory and regulatory provisions to undertake inspections and enforcement actions and to issue orders in all authorized states. On occasion when EPA might need to undertake these actions, it will rely on Federal sanctions, Federal inspection authorities, and Federal procedures rather than any authorized state analogues to these provisions. Therefore, the EPA is not incorporating by reference any such approved Oklahoma procedural and enforcement authorities. 40 CFR 272.1851(b)(2) lists the statutory provisions which provide the legal basis for the state's implementation of the hazardous waste management program, as well as those procedural and enforcement authorities that are part of the state's approved program, but these are not incorporated by reference.

E. What State Provisions Are Not Part of the Codification?

The public needs to be aware that some provisions of Oklahoma's hazardous waste management program are not part of the federally authorized state program. These non-authorized provisions include:

(1) Provisions that are not part of the RCRA subtitle C program because they are ''broader in scope'' than RCRA subtitle C (*see* 40 CFR 271.1(i));

(2) Federal rules for which Oklahoma is not authorized, but which have been incorporated into the state regulations because of the way the state adopted Federal regulations by reference.

State provisions that are ''broader in scope'' than the Federal program are not part of the RCRA authorized program and EPA will not enforce them. Therefore, they are not incorporated by reference in 40 CFR part 272. For reference and clarity, 40 CFR 272.1851(b)(3) lists the Oklahoma regulatory provisions which are ''broader in scope'' than the Federal program and which are not part of the authorized program being incorporated by reference. ''Broader in scope'' provisions cannot be enforced by EPA; the state, however, may enforce such provisions under state law.

Oklahoma has adopted but is not authorized for the Federal rule regarding exclusion of a waste from the list of hazardous waste, 40 CFR 260.20 *et seq.*, (''delisting'') published on July 15, 1985 (50 FR 28702) and amended on June 27,

1989 (54 FR 27114); and the Federal rules published in the **Federal Register** on October 5, 1990 (55 FR 40834); February 1, 1991 (56 FR 3978); February 13, 1991 (56 FR 5910); April 2, 1991 (56 FR 13406); May 1, 1991 (56 FR 19951); December 23, 1991 (56 FR 66365); June 29, 1995 (60 FR 33912) and May 26, 1998 (63 FR 28556). Therefore, these Federal amendments included in Oklahoma's adoption by reference at OKLA. ADMIN. CODE sections 252:205–7–4, 252:205–3–2(b) through 252:205–3–2(k), are not part of the state's authorized program and are not part of the incorporation by reference addressed by today's **Federal Register** document.

With respect to any requirement pursuant to the Hazardous and Solid Waste Amendments of 1984 (HSWA) for which the State has not yet been authorized, EPA will continue to enforce the Federal HSWA standards until the State is authorized for these provisions.

F. What Will Be the Effect of Federal HSWA Requirements on the Codification?

The EPA is not amending 40 CFR part 272 to include HSWA requirements and prohibitions that are implemented by EPA. Section 3006(g) of RCRA provides that any HSWA requirement or prohibition (including implementing regulations) takes effect in authorized and not authorized states at the same time. A HSWA requirement or prohibition supersedes any less stringent or inconsistent state provision which may have been previously authorized by EPA (50 FR 28702, July 15, 1985). EPA has the authority to implement HSWA requirements in all states, including authorized states, until the states become authorized for such requirement or prohibition. Authorized states are required to revise their programs to adopt the HSWA requirements and prohibitions, and then to seek authorization for those revisions pursuant to 40 CFR part 271.

Instead of amending the 40 CFR part 272 every time a new HSWA provision takes effect under the authority of RCRA section 3006(g), EPA will wait until the state receives authorization for its analog to the new HSWA provision before amending the state's 40 CFR part 272 incorporation by reference. Until then, persons wanting to know whether a HSWA requirement or prohibition is in effect should refer to 40 CFR 271.1(j), as amended, which lists each such provision.

Some existing state requirements may be similar to the HSWA requirement implemented by EPA. However, until EPA authorizes those state requirements, EPA can only enforce the HSWA requirements and not the state analogs. EPA will not codify those state requirements until the state receives authorization for those requirements.

III. Administrative Requirements

The Office of Management and Budget (OMB) has exempted this action from the requirements of Executive Order 12866 (58 FR 51735, October 4, 1993), and therefore this action is not subject to review by OMB. This rule incorporates by reference Oklahoma's authorized hazardous waste management regulations and does not impose new burdens on small entities. Accordingly, I certify that this action will not have a significant economic impact on a substantial number of small entities under the Regulatory Flexibility Act (5 U.S.C. 601 *et seq.*). Because this rule merely incorporates by reference certain existing State hazardous waste management program requirements which EPA already approved under 40 CFR part 271, and with which regulated entities must already comply, it does not contain any unfunded mandate or significantly or uniquely affect small governments, as described in the Unfunded Mandates Reform Act of 1995 (Pub. L. 104–4). For the same reason, this action also does not have tribal implications within the meaning of Executive Order 13175 (65 FR 67249, November 6, 2000). It does not have substantial direct effects on tribal governments, on the relationship between the Federal government and the Indian tribes, or on the distribution of power and responsibilities between the Federal government and Indian tribes, as specified in Executive Order 13175. This action will not have substantial direct effects on the States, on the relationship between the Federal government and the States, or on the distribution of power and responsibilities among the various levels of government, as specified in Executive Order 13132 (64 FR 43255, August 10, 1999), because it merely incorporates by reference existing authorized state hazardous waste management program requirements without altering the relationship or the distribution of power and responsibilities established by RCRA. This action also is not subject to Executive Order 13045 (62 FR 19885, April 23, 1997), because it is not economically significant and it does not make decisions based on environmental health or safety risks. This rule is not subject to Executive Order 13211, ''Actions Concerning Regulations That Significantly Affect Energy Supply, Distribution, or Use'' (66 FR 28355 (May 22, 2001)) because it is not a significant regulatory action under Executive Order 12866.

The requirements being codified are the result of Oklahoma's voluntary participation in EPA's State program authorization process under RCRA Subtitle C. Thus, the requirements of section 12(d) of the National Technology Transfer and Advancement Act of 1995 (15 U.S.C. 272 note) do not apply. As required by section 3 of Executive Order 12988 (61 FR 4729, February 7, 1996), in issuing this rule, EPA has taken the necessary steps to eliminate drafting errors and ambiguity, minimize potential litigation, and provide a clear legal standard for affected conduct. EPA has complied with Executive Order 12630 (53 FR 8859, March 15, 1988) by examining the takings implications of the rule in accordance with the ''Attorney General's Supplemental Guidelines for the Evaluation of Risk and Avoidance of Unanticipated Takings'' issued under the executive order. This rule does not impose an information collection burden under the provisions of the Paperwork Reduction Act of 1995 (44 U.S.C. 3501 *et seq.*).

The Congressional Review Act, 5 U.S.C. 801 *et seq.*, as amended by the Small Business Regulatory Enforcement Fairness Act of 1996, generally provides that before a rule may take effect, the agency promulgating the rule must submit a rule report, which includes a copy of the rule, to each House of the Congress and to the Comptroller General of the United States. EPA will submit a report containing this document and other required information to the U.S. Senate, the U.S. House of Representatives, and the Comptroller General of the United States prior to publication in the **Federal Register**. A major rule cannot take effect until 60 days after it is published in the **Federal Register**. This action is not a ''major rule'' as defined by 5 U.S.C. 804(2). This action will be effective October 27, 2003.

List of Subjects in 40 CFR Part 272

Environmental protection, Administrative practice and procedure, Confidential business information, Hazardous waste, Hazardous waste transportation, Incorporation by reference, Indian lands, Intergovernmental relations, Penalties, Reporting and recordkeeping requirements, Water pollution control, Water supply.

Authority: This action is issued under the authority of sections 2002(a), 3006 and

7004(b) of the Solid Waste Disposal Act as amended, 42 U.S.C. 6912(a), 6926, 6974(b).

Dated: March 27, 2003.

Lawrence E. Starfield,

Acting Regional Administrator, Region 6.

■ For the reasons set forth in the preamble, 40 CFR part 272 is amended as follows:

PART 272—APPROVED STATE HAZARDOUS WASTE MANAGEMENT PROGRAMS

■ 1. The authority citation for part 272 continues to read as follows:

Authority: Secs. 2002(a), 3006, and 7004(b) of the Solid Waste Disposal Act, as amended by the Resource Conservation and Recovery Act, as amended, 42 U.S.C. 6912(a), 6926, and 6974(b).

Subpart LL—[Amended]

■ 2. Section 272.1851 is revised to read as follows:

§ 272.1851 Oklahoma State-administered program: Final authorization.

(a) Pursuant to section 3006(b) of RCRA, 42 U.S.C. 6926(b), Oklahoma has final authorization for the following elements as submitted to EPA in Oklahoma's base program application for final authorization which was approved by EPA effective on January 10, 1985. Subsequent program revision applications were approved effective on June 18, 1990, November 27, 1990, June 3, 1991, November 19, 1991, November 29, 1993, December 21, 1994, April 27, 1995, March 14, 1997, July 14, 1998, November 23, 1998, February 8, 1999, May 30, 2000, July 10, 2000 and March 5, 2001.

(b) State Statutes and Regulations.

(1) The Oklahoma statutes and regulations cited in paragraph (b)(1)(i) of this section are incorporated by reference as part of the hazardous waste management program under subtitle C of RCRA, 42 U.S.C. 6921 *et seq.* (*See* § 272.2).

(i) The Binder entitled ''EPA Approved Oklahoma Statutory and Regulatory Requirements Applicable to the Hazardous Waste Management Program'', dated March, 2001.

(ii) [Reserved]

(2) The following provisions provide the legal basis for the State's implementation of the hazardous waste management program, but they are not being incorporated by reference and do not replace Federal authorities:

(i) Oklahoma Hazardous Waste Management Act, as amended, 27A Oklahoma Statute (O.S.) 1997 Edition (unless otherwise specified), Sections 2–2–104, 2–7–102, 2–7–104, 2–7–105 (except 2–7–105(27), 2–7–105(29) and 2–7–105(34)), 2–7–106, 2–7–107, 2–7–108(B)(2), 2–7–110(A), 2–7–113.1, 2–7–115, 2–7–116(A), 2–7–116(G), 2–7–116(H)(1), 2–7–123, 2–7–126 (1999 Supplement), 2–7–129, 2–7–130, 2–7–131 and 2–7–133.

(ii) The Oklahoma Administrative Code, Title 252, Chapter 205, Hazardous Waste Management, effective June 12, 2000: Subchapter 1, Sections 252:205–1–1(b), 252:205–1–3(a) and (b), 252:205–1–4(a)–(d); Subchapter 3, Sections 252:205–3–2 introductory paragraph, and 252:205–3–2(a)(1).

(3) The following statutory and regulatory provisions are broader in scope than the Federal program, are not part of the authorized program, and are not incorporated by reference:

(i) Oklahoma Hazardous Waste Management Act, as amended, 27A Oklahoma Statute 1997 Edition, Sections 2–7–119, 2–7–121 and 2–7–134.

(ii) The Oklahoma Administrative Code, Title 252, Chapter 205, effective June 12, 2000: Subchapter 1, Section 252:205–1–1(c)(2)–(4), 252:205–1–2 ''RRSIA''. 252:205–1–2 ''Reuse'', 252:205–1–2 ''Speculative accumulation'', 252:205–1–2 ''Transfer facility'', 252:205–1–2 ''Transfer station'', 252:205–1–4(e) and (f); Subchapter 5, Sections 252:205–5–1(4), Subchapter 15; Subchapter 17; Subchapter 21; and 252:205 Appendices A, B, and C.

(4) *Unauthorized State Amendments.* The State's adoption of the Federal rules listed below is not yet approved by EPA and is, therefore, not enforceable:

Federal requirement	**Federal Register** reference	Publication date
Delisting	50 FR 28702	07/15/85
	54 FR 27114	06/27/89
	Amendments to 260.22(a) through 260.22(e).	
Toxicity Characteristics; Hydrocarbon Recovery Operations	55 FR 40834	10/05/90
	56 FR 3978	02/01/91
	56 FR 13406	04/02/92
Toxicity Characteristics; Chlorofluorocarbon Refrigerants	56 FR 5910	02/13/91
Administrative Stay for K069 Listing	56 FR 19951	05/01/91
Amendments to Interim Status Standards for Downgradient Ground-water Monitoring Well Locations.	56 FR 66365	12/23/91
Removal of Legally Obsolete Rules	60 FR 33912	06/29/95
Mineral Processing Secondary Materials Exclusion	63 FR 28556	05/26/98

(5) *Memorandum of Agreement.* The Memorandum of Agreement between EPA Region 6 and the State of Oklahoma (ODEQ), signed by the EPA Regional Administrator on March 1, 2000, is referenced as part of the authorized hazardous waste management program under subtitle C of RCRA, 42 U.S.C. 6921 *et seq.*

(6) *Statement of Legal Authority.* ''Attorney General's Statement for Final Authorization'', signed by the Attorney General of Oklahoma on January 20, 1984 and revisions, supplements and addenda to that Statement dated January 14, 1988 (as amended July 20, 1989); December 22, 1988 (as amended June 7, 1989 and August 13, 1990); November 20, 1989; November 16, 1990; November 6, 1992; June 24, 1994; December 8, 1994; March 4, 1996; April 15, 1997; February 6, 1998, December 2, 1998, October 15, 1999 and May 31, 2000, are referenced as part of the authorized hazardous waste management program under subtitle C of RCRA, 42 U.S.C. 6921 *et seq.*

(7) *Program Description.* The Program Description and any other materials submitted as supplements thereto are referenced as part of the authorized hazardous waste management program under subtitle C of RCRA, 42 U.S.C. 6921 *et seq.*

■ 3. Appendix A to part 272 is amended by revising the listing for ''Oklahoma'' to read as follows:

Appendix A to Part 272—State Requirements

* * * * *

Oklahoma

The statutory provisions include:

Oklahoma Hazardous Waste Management Act, as amended, 27A Oklahoma Statute 1997 Edition, Sections 2–7–103, 2–7–108(A), 2–7–108(B)(1), 2–7–108(B)(3), 2–7–108(C), 2–7–110(B), 2–7–110(C), 2–7–111(A), 2–7–111(B) (except the last sentence and the phrase, ''recycling'' in the first sentence), 2–7–111(C)(2)(a) (except the phrase ''Except as provided in subparagraph b of this paragraph'' and the word ''recycling'' in the first sentence), 2–7–111(D), 2–7–111(E) (except the word ''recycling'' in the first sentence), 2–7–112, 2–7–116(B) through 2–7–116(F), 2–7–116(H)(2), 2–7–118(A), 2–7–124, 2–7–125, 2–7–127 and 2–10–301(G).

Copies of the Oklahoma statutes that are incorporated by reference are available from West Publishing Company, 610 Opperman Drive, PO Box 64526, St. Paul, Minnesota 55164–0526.

The regulatory provisions include:

The Oklahoma Administrative Code, Title 252, Chapter 205, effective June 12, 2000: Subchapter 1, Sections 252:205–1–1(a), 252:205–1–1(c) introductory paragraph, 252:205–1–1(c)(1), 252:205–1–2 introductory paragraph, 252:205–1–2 ''OHWMA'', 252:205–1–2 ''Post-closure permit'', 252:205–1–3(c); Subchapter 3, Sections 252:205–3–1, 252:205–3–2(a)(2), 252:205–3–2(b)–(m), 252:205–3–4, 252:205–3–5 and 252:205–3–6; Subchapter 5, Sections 252:205–5–1 (except 252:205–5–1(4)), 252:205–5–2 through 252:205–5–5; Subchapter 7, Sections 252:205–7–1 through 252:205–7–3 and 252:205–7–4 (except the phrase ''or in accordance with 252:205–15–1(d)); Subchapter 9 (except 252:205–9–5 and 252:205–9–6); Subchapter 11, 252:205–11–1(a) (except the word ''recycling''), 252:205–11–1(b) through 252:205–11–1(e) and 252:205–11–2; and Subchapter 13, Sections 252:205–13–1(a)—(e).

Copies of the Oklahoma regulations that are incorporated by reference can be obtained from The Oklahoma Register, Office of Administrative Rules, Secretary of State, 101 State Capitol, Oklahoma City, Oklahoma 73105.

* * * * *

[FR Doc. 03–21592 Filed 8–26–03; 8:45 am]

BILLING CODE 6560–50–P

DEPARTMENT OF HEALTH AND HUMAN SERVICES

Health Resources and Services Administration

42 CFR Part 102

RIN 0906–AA60

Smallpox Vaccine Injury Compensation Program: Smallpox (Vaccinia) Vaccine Injury Table

AGENCY: Health Resources and Services Administration, HHS.

ACTION: Interim Final Rule.

SUMMARY: The Smallpox Emergency Personnel Protection Act of 2003 (SEPPA), Public Law 108–20, 117 Stat. 638, authorized the Secretary of Health and Human Services (the Secretary), through the establishment of the Smallpox Vaccine Injury Compensation Program (the Program), to provide benefits and/or compensation to certain persons who have sustained injuries as a result of the administration of smallpox covered countermeasures (including the smallpox vaccine) or as a result of vaccinia contracted through accidental vaccinia inoculations.

The SEPPA directed the Secretary to establish, by interim final rule, a table identifying adverse effects (including injuries, disabilities, conditions, and deaths) that shall be presumed to result from the administration of or exposure to the smallpox vaccine, and the time interval in which the first symptom or manifestation of each listed injury must manifest in order for such presumption to apply. As mandated by law, the Secretary is establishing such a Smallpox (Vaccinia) Vaccine Injury Table (the Table) through this interim final rule. The Secretary is also establishing a set of Table Definitions and Requirements, which define the terms and conditions included on the Table and are to be read in conjunction with the Table.

The Secretary is seeking public comment on the Table established through this interim final rule. At a later date, the Secretary will publish a companion final rule setting forth the administrative implementation of the Program. The public will then be afforded an additional opportunity to comment on the procedures set forth therein.

DATES: This regulation is effective on August 27, 2003. Written comments must be submitted on or before October 27, 2003. The Secretary will consider the comments received and will decide whether to amend the Table based upon such comments.

ADDRESSES: All written comments concerning this interim final rule should be submitted to the Director, Smallpox Vaccine Injury Compensation Program, Office of Special Programs, Health Resources and Services Administration, Parklawn Building, Room 16C–17, 5600 Fishers Lane, Rockville, Maryland 20857. Express and courier mail should be sent to Smallpox Vaccine Injury Compensation Program, Office of Special Programs, Health Resources and Services Administration, 4350 East West Highway, 10th Floor, Bethesda, Maryland 20814. Electronic comments should be sent to *smallpox@hrsa.gov.* Comments received will be available for public inspection at the Office of Special Programs, Health Resources and Services Administration, 4350 East West Highway, 10th Floor, Bethesda, Maryland 20814, between the hours of 8:30 a.m. and 5 p.m. on Federal Government work days.

FOR FURTHER INFORMATION CONTACT: Dr. Vito Caserta, telephone (301) 443–4956. This is not a toll-free number. Electronic inquiries should be sent to *smallpox@hrsa.gov.*

SUPPLEMENTARY INFORMATION:

Background

Prior to its eradication, smallpox (variola) was a serious illness that manifested either as outbreaks of variola major with death rates of greater than 20 percent or variola minor with death rates approaching 1 percent. Those who survived were frequently left with significant disabilities, such as blindness. Smallpox (vaccinia) vaccine (referred to in this rule as the ''smallpox vaccine'') was an essential tool for the successful global eradication of smallpox (variola), announced by the World Health Organization in 1980. Despite such eradication, concern exists that terrorists may have access to the smallpox (variola) virus (referred to in this rule as the ''smallpox virus'').

On December 13, 2002, the President announced a plan to protect the population of the United States against the threat of a possible smallpox attack. This plan was based on heightened concerns, in the wake of the attacks of September and October 2001, that terrorists may have access to the smallpox virus and may attempt to use it against the population of the United States and government facilities abroad. Under this plan, which the Secretary is actively working to implement, State and local governments have formed volunteer smallpox response teams that will be prepared to provide critical services to the population of the United

States in the event of a smallpox virus attack.

In furtherance of the President's plan, the Secretary issued a Declaration Regarding Administration of Smallpox Countermeasures on January 24, 2003 (68 FR 4212). In this Declaration, the Secretary declared that ''a potential bioterrorist incident makes it advisable to administer, on a voluntary basis, covered countermeasures specified * * * for prevention or treatment of smallpox [(virus infection)] or control or treatment of adverse events related to smallpox vaccination, to [specified] categories of individuals. * * *'' The specific ''covered countermeasures'' described in the Declaration are smallpox vaccines, cidofovir and derivatives thereof, and Vaccinia Immune Globulin. The categories of persons to whom the Secretary recommended the administration of such covered countermeasures, on a voluntary basis, included certain health care workers, members of smallpox response teams identified by State or local government entities or the Department of Health and Human Services, certain public safety personnel, and certain personnel associated with certain Federal facilities abroad. The Secretary recommended that such persons volunteer to receive the smallpox vaccine in order to ensure that critical personnel would be able to mobilize immediately and provide critical services to the population of the United States in the event of a smallpox virus attack. The Secretary's Declaration became effective on January 24, 2003, and will remain effective until January 23, 2004, unless the Secretary extends or shortens the effective period of the Declaration by amendment.

The smallpox vaccine contains a live vaccinia virus that induces immunity to smallpox infection, but does not lead to variola infection or disease. Vaccinia virus is an orthopox type virus that is different from, but related to, the smallpox virus. Different strains of vaccinia have been used in the development of smallpox vaccines throughout the world, with some strains causing more injuries than other strains. The New York City Board of Health strain, ''the NYCBH strain,'' is the only strain currently used in vaccines administered in the United States. The NYCBH strain was selected for use in such vaccines because it has shown itself to be both relatively safe and effective when compared to other vaccinia strains. Nevertheless, the routine use of smallpox vaccination in the United States and several other countries, irrespective of the strain used, was discontinued prior to the certification of global eradication of smallpox. This was due to the relatively high complication rate observed with the smallpox vaccine, in addition to the lower risk of importation of smallpox with the increasing success of the global eradication program.

Because the vaccinia virus in the smallpox vaccine is live, it can be transmitted to other parts of the body of the vaccine recipient, *e.g.*, by touching a vaccination site before it has healed and then touching another part of the recipient's body (self-inoculation), or to another person, *e.g.*, by touching a vaccination site in a recipient before it has healed and then touching another person (accidental person-to-person inoculation). For purposes of this rule, the term ''vaccination'' refers to the administration and receipt of the smallpox vaccine and not through contact. Likewise, for purposes of this rule, the term ''inoculation'' is meant to refer to transmission of and subsequent infection with the vaccinia virus through a means other than smallpox vaccination, as described above.

Even though several studies documented the rate of serious complications after receipt of the smallpox vaccine during the 1960s and 1970s, these rates may be higher today as more individuals are immunocompromised, which has the same meaning for purposes of this regulation as immunosuppressed or immunodeficient. Furthermore, persons receiving primary smallpox vaccination under a smallpox emergency response plan will be doing so as adults. The earlier studies also primarily sought information only on what was known already to be caused by the smallpox vaccine. Unrecognized adverse reactions that may become more clearly evident with improved surveillance may not have been studied in the past.

The SEPPA authorized the Secretary to establish and implement the Smallpox Vaccine Injury Compensation Program. Under the Program, certain persons may receive benefits and/or compensation for covered injuries, described below, sustained as a result of such vaccination or accidental vaccinia inoculation. Specifically, SEPPA authorizes the Secretary to make available such benefits and/or compensation to two categories of persons who sustain covered injuries, provided they meet other legal requirements, *e.g.*, filing deadlines. The first category, described as ''recipients,'' includes certain persons who volunteer for and are selected to be a member of a smallpox emergency response plan and are vaccinated with smallpox vaccine. In the event that recipients sustain covered injuries as the result of the administration of the smallpox vaccine or other covered countermeasures listed in the Secretary's Declaration, they may be entitled to benefits and/or compensation under the Program. The second category, described as ''contacts,'' includes certain persons who sustained covered injuries as the result of vaccinia contracted through accidental vaccinia inoculation through contact with categories of recipients described in the SEPPA or the contacts of such recipients. In addition, survivors of deceased recipients or contacts may be eligible for benefits and/or compensation under the Program in certain circumstances. Persons who do not meet the criteria for one of these categories (*e.g.*, individuals who receive the smallpox vaccine, but not as part of an approved smallpox emergency response plan) will not be entitled to benefits.

In order to obtain benefits and/or compensation under the Program, eligible individuals in these categories must file a request with the Program and demonstrate to the Secretary in their requests that applicable eligibility, benefits, and compensation criteria are satisfied. Persons filing such requests with the Program are described as requesters. The benefits and compensation available under the Program include compensation for medical care, lost employment income, and a death benefit for certain survivors of persons who died as the result of a covered injury. A requester's entitlement to such benefits and compensation will vary depending upon the nature of the requester's condition, the requester's particular personal circumstances, *e.g.*, whether the requester has insurance coverage, and the completeness of the request and accompanying documentation.

Among the criteria that must be satisfied in order for a person to be entitled to such benefits and/or compensation is the requirement that a person sustained a ''covered injury'' as the result of the administration of a covered countermeasure or as the result of an accidental vaccinia inoculation. A requester can demonstrate that such a covered injury, an injury either proven or presumed to be caused by the vaccinia virus contained in the smallpox vaccine or transmitted through accidental vaccinia inoculation and meeting all applicable requirements, occurred through two alternative mechanisms. First, in accordance with the SEPPA, a recipient or contact shall be presumed to have sustained a covered injury as the result of the

administration of or exposure to the smallpox vaccine if the requester submits sufficient documentation demonstrating that the event is included on an injury table (*i.e.*, the Table) created by the Secretary with the onset of the first symptom or manifestation within the time interval specified on the Table. For this reason, if an otherwise eligible person sustained an injury listed on the Table in the time interval listed on the Table, the Secretary will presume, solely for purposes of the Program, that this event was caused by the smallpox vaccine. Such a requester need not actually demonstrate that the vaccine or the vaccinia contracted from accidental vaccinia inoculation caused the underlying injury, only that an injury listed on the Table was sustained with the first manifestation within the time interval listed on the Table.

This presumption is not conclusive, however. The Secretary may determine, based on his review of the relevant evidence, that an injury meeting the Table requirements was most likely caused by other factors and was not caused by the smallpox vaccine or exposure to vaccinia in contact cases. In these circumstances, the Table presumption could be rebutted, and the requester may not be entitled to benefits and/or compensation under the Program.

The alternative mechanism to demonstrate that a covered injury was sustained is available when a requester cannot demonstrate that a Table injury occurred within the time interval listed on the Table. In such circumstances, the requester must submit sufficient documentation showing that the smallpox vaccine or other covered countermeasures, or the vaccinia contracted from accidental vaccinia inoculation, actually caused the injury that is the basis for the request. In evaluating such claims, the Secretary will employ a preponderance of the evidence standard, taking into consideration all relevant medical and scientific evidence, including all relevant medical records.

As authorized and mandated under the SEPPA, the Secretary is herein establishing, at 42 CFR 102.21, a Table that identifies injuries, *i.e.*, illnesses, disabilities, injuries, or conditions, referred to as ''Table injuries,'' that shall be presumed to result from the administration of or exposure to the smallpox vaccine, as well as the time interval in which the first symptom or manifestation of each such injury must manifest in order for this presumption to apply. The Secretary is further including Table Definitions and Requirements, set forth in 42 CFR 102.21(b), which define the terms and conditions included in the Table and set forth the requirements necessary to establish Table injuries. As such, the Table Definitions and Requirements are considered a part of the Table.

At this time, the Secretary is seeking public comment on the Table established through this interim final rule. The Secretary will solicit comments on other matters pertaining to the implementation of the Program in the future, when the Secretary publishes a companion rule detailing the policies and procedures for the implementation of the Smallpox Vaccine Injury Compensation Program.

Summary of Regulation

Smallpox (Vaccinia) Vaccine Injury Table

This interim final rule establishes the Table, which includes the covered injuries for the smallpox vaccine and the relevant time intervals for ''recipient requests'' (requests concerning injuries in relation to the administration of the smallpox vaccine) and ''contact requests'' (requests concerning injuries in relation to vaccinia contracted through accidental vaccinia inoculation from another person). In order to obtain the presumption of causation afforded by the Table, a requester filing a recipient request must demonstrate that the onset of the recipient's first symptom or manifestation of an injury listed on the Table occurred within the timeframe listed on the Table in relation to the administration of the smallpox vaccine. Likewise, in order to obtain the Table presumption of causation, a requester filing a contact request must demonstrate that the onset of the contact's first symptom or manifestation of the injury listed on the Table occurred within the time interval listed on the Table in relation to any date in the exposure period.

A contact may be exposed to vaccinia on any date in the exposure period, which is the span of time during which transmission of vaccinia virus from a vaccine recipient or another contact shedding vaccinia can occur. The risk of exposure from viral shedding from a recipient or contact is generally considered no longer to exist when the scab from each vaccinial lesion spontaneously falls off, which usually occurs approximately three weeks after vaccination or inoculation in a healthy person and may be considerably longer in the immunocompromised or those experiencing injuries such as eczema vaccinatum.

The time intervals listed on the Table for recipients reflect the quantity of time between vaccination and the onset of the first symptom or manifestation of the Table injury. For contacts, because the exact time the vaccinia virus is transmitted cannot generally be pinpointed, the time intervals listed on the Table reflect a comparable quantity of time between exposure to vaccinia (i.e. any point in the exposure period) and the onset of the first symptom or manifestation of the Table injury.

The injuries included on the Table, as well as the time intervals set forth for both recipients and contacts, represent the Secretary's best effort to include a comprehensive listing of injuries believed to be causally related to the smallpox vaccine. The Table is meant to represent the known NYCBH strain injuries where credible medical evidence suggests that the smallpox vaccine has a causal role in the injury and the time intervals in which such known events first manifest in relation to the administration of the smallpox vaccine, or the exposure to vaccinia in contact cases. However, the Table covers all smallpox vaccines administered under the Secretary's Declaration. With future generations of smallpox vaccines, the Secretary may need to amend the Table to fit the injury profile of the new vaccine.

Although the occurrence of many of the injuries included on the Table appears to be exceedingly rare, the Secretary is including such injuries on the Table in order to ensure that people who are otherwise eligible for benefits and/or compensation under the Program will receive the Table's presumption of causation in those instances in which the credible medical literature persuasively suggests a causal relationship between the smallpox vaccine and the injury. The Table presumption can be rebutted if the Secretary determines, based on a review of the relevant evidence, that an injury meeting the Table requirements was not caused by the smallpox vaccine or exposure to vaccinia in contact cases.

The Secretary is aware of anecdotal reports of ischemic heart disease, such as angina pectoris or myocardial infarction (heart attacks) occurring in a few individuals following receipt of the smallpox vaccine. The Secretary has included vaccinia-related myocarditis, pericarditis, and myopericarditis as Table injuries but, at this time, there is no clear scientific evidence to support including ischemic heart disease as a separate Table injury.

Nevertheless, where a requester can demonstrate that an ischemic heart disease following a covered Table injury was likely caused by, or was a health complication (i.e., sequela) of, the Table

injury, we expect that the requester will be eligible for benefits associated with the ischemic heart disease.

Should sufficient scientific evidence be forthcoming that ischemic heart disease (absent these Table conditions) is caused by the vaccine, the Secretary would amend the Table (see discussion below), with retroactive effect, to include this condition too. Furthermore, even absent a Table injury for ischemic heart disease, requesters may provide sufficient evidence of causation in fact for this injury, which might also lead to Program benefits.

The Secretary will provide further information in the forthcoming companion regulation as to how he will determine whether an event was caused by, or was a health complication of, a covered injury.

In addition to specific injuries, the Table includes a category for any death resulting from an injury included on the Table in which the injury arose within the time interval set forth on the Table. No time interval is specified for the category of death. Therefore, so long as the Secretary determines that the death resulted from an injury meeting the Table requirements, the death can occur at any time subsequent to the injury and not necessarily in the time interval set forth on the Table.

Table Definitions and Requirements

The Table's Definitions and Requirements, set forth in 42 CFR 102.53(b), define and describe the scope of the terms included on the Table. As such, the listings included on the Table are to be read in conjunction with the Definitions and Requirements. For each Table injury, the Table Definitions and Requirements must be satisfied.

By law, requesters will be required to provide documentation showing that they meet other eligibility criteria, separate from the Table, in order to demonstrate eligibility to receive benefits and/or compensation under the Program. For example, each requester filing a contact request is required by law to demonstrate to the Secretary that the contact contracted vaccinia through accidental vaccinia inoculation during the effective dates of the Secretary's Declaration, or up to 30 days thereafter. This requirement applies to all contact requests filed, regardless of whether the injury in question is included on the Table. For this reason, the requirement that a requester with a contact request demonstrate that the contact contracted vaccinia within the time interval specified by law is not incorporated into the Table. The companion regulations that the Secretary will issue in the future will provide detailed information concerning this requirement and other requirements that requesters must satisfy beyond those that pertain exclusively to injuries included on the Table.

Requests Based on Non-Table Injuries

A requester may be eligible to receive benefits and/or compensation available through the Program even if the underlying injury is not included on the Table, as defined through the Definitions and Requirements, or did not occur within the time-frame included on the Table. Because such requesters will not be afforded the presumption of causation given to requesters who establish Table injuries, requesters filing requests based on non-Table injuries must submit documentation that demonstrates to the Secretary that the injury underlying the request was actually caused by the administration of the covered countermeasure, or by vaccinia through accidental vaccinia inoculation in contact requests. The Secretary will give full and fair review of all such requests.

Medical evidence available concerning a possible causal link between the vaccinia virus and particular conditions may not be sufficient for the Secretary to add such conditions to the Table. However, such evidence together with medical documentation introduced by particular requesters may be sufficient for requesters with such conditions to persuade the Secretary that the vaccinia virus from vaccination or inoculation was a significant factor in causing the condition. For example, medical literature suggests that the vaccinia virus has caused acute vaccinial arthritis (VA) or vaccinial osteomyelitis (VO) in isolated instances. As a result, requesters with such conditions may be entitled to compensation even when such conditions are not included on the Table. In order to demonstrate that a particular person's condition was caused by the vaccinia virus through vaccination or inoculation, requesters must provide evidence demonstrating such a link, *e.g.*, evidence that the vaccinia virus was present in an infected joint in a case of alleged VA or in an osteomyelitis in a case of alleged VO. Such evidence may persuade the Secretary to determine that the person sustained a covered, albeit a non-Table, injury. Likewise, persons in whom a malignant melanoma (MM), basal cell carcinoma (BCC), or squamous cell carcinoma (SCC) originated with the first manifestation in a vaccination or inoculation scar may be able to demonstrate to the Secretary that the vaccinia virus caused the MM, BCC, or SCC. This is consistent with the rare cases in the medical literature in which a causal link has been suggested between the vaccinia virus and such skin tumors, *e.g.*, persons who developed new tumors, *i.e.*, MM, BCC, or SCC (as the first manifestation of each tumor) in separate vaccinial scars from separate vaccinations given years apart.

To decide whether benefits and/or compensation under the Program are available in relation to a request that does not concern a Table injury, the Secretary will review the materials provided in each case. In reviewing these requests, the Secretary will employ a preponderance of the evidence standard, taking into consideration relevant medical and scientific evidence. The Secretary will provide further information concerning such requests when he publishes the companion final rule setting forth the administrative implementation of the Program.

No Table for Other Non-Vaccine Covered Countermeasures

The Secretary was statutorily directed to establish a Table identifying injuries presumed to result from the administration of or exposure to the smallpox vaccine. The SEPPA did not direct the Secretary to establish such a Table in relation to injuries presumed to result from the administration of other covered countermeasures. Nonetheless, certain requesters may still be entitled to benefits and/or compensation in relation to injuries that resulted from covered countermeasures other than the smallpox vaccine, *i.e.*, Vaccinia Immune Globulin, cidofovir and derivatives thereof. Requesters filing requests in relation to such injuries are not afforded the presumption of causation given to requesters who have sustained Table injuries. For this reason, a requester filing a request in relation to such non-vaccine covered countermeasures, as with any non-Table request, must demonstrate to the Secretary that the administration of the covered countermeasure actually caused an injury for which benefits and/or compensation may be available under the Program.

Amendments to Table

In accordance with Section 263(a)(2) of the Public Health Service Act (PHS Act), as established by SEPPA, the Secretary is authorized to amend by regulation the Table established in this interim final rule. The Secretary intends to monitor injuries in relation to covered countermeasures, including the smallpox vaccine. Based upon the best scientific evidence available, the

Secretary will amend the Table to add new injuries, to modify the governing time intervals, or to modify Table definitions, when the evidence supports doing so. Such amendments will apply to pending requests and to requests filed after the amendments take effect. Requesters who become eligible with respect to an injury on the Table as the result of such an amendment may file a request based on the amendment within the time period prescribed by law.

Justification for Omitting Notice of Proposed Rulemaking and for Waiver of Delayed Effective Date

Through the enactment by the SEPPA of Section 263(a)(1) of the PHS Act, the Secretary was directed to establish by interim final rule a table identifying injuries that shall be presumed to result from the administration of or exposure to the smallpox vaccine, and the time interval in which the first symptom or manifestation of each such injury must manifest in order for such presumption to apply. In accordance with that statutory directive, the Secretary is herein establishing such a Table, including Definitions and Requirements. As noted earlier, the establishment of this Table by interim final rule was authorized by statute.

The Secretary has further determined, under 5 U.S.C. 553(b), that it is contrary to the public interest to follow the notice of proposed rulemaking procedures before issuance of these regulations, because such a process might delay the continuing implementation of the President's plan to protect the population of the United States against the threat of a smallpox (variola) attack. A significant element of this plan, which is also an important priority of the Secretary, is the increased voluntary participation of persons in smallpox emergency response plans throughout the Nation, which includes voluntary immunization with the smallpox vaccine. The companion regulation, which will serve to implement the Program, will be issued after this regulation is in effect. The sooner that this regulation becomes effective, the sooner potential requesters will be able to assess their eligibility to recover benefits and/or compensation from the Program and to recover such benefits and/or compensation, if eligible. For the same reasons, the Secretary has determined that there is good cause to waive a delay in the rule's effective date.

As noted above, comments will be accepted at the above listed address for a period of 60 days following the publication of this rule.

Economic and Regulatory Impact

Executive Order 12866 directs agencies to assess all costs and benefits of available regulatory alternatives and, when rulemaking is necessary, to select regulatory approaches that provide the greatest net benefits (including potential economic, environmental, public health, safety distributive and equity effects). In addition, under the Regulatory Flexibility Act (RFA), if a rule has a significant economic effect on a substantial number of small entities, the Secretary must specifically consider the economic effect of a rule on small entities and analyze regulatory options that could lessen the impact of the rule.

Executive Order 12866 requires that all regulations reflect consideration of alternatives, of costs, of benefits, of incentives, of equity, and of available information. Regulations must meet certain standards, such as avoiding an unnecessary burden. Regulations that are ''significant'' because of cost, adverse effects on the economy, inconsistency with other agency actions, effects on the budget, or novel legal or policy issues, require special analysis.

Congress has found it necessary to appropriate $42,000,000 for the administration of, and payment of the Program. Because any resources required to implement the regulatory requirements imposed by the SEPPA are not required by virtue of the establishment of a Table, and because the Secretary will conduct an independent analysis concerning any burdens associated with the implementation of the Program when the Secretary publishes the companion regulations setting forth the Program's administrative implementation, the Secretary has determined that no resources are required to implement the provisions included in this regulation. Therefore, in accordance with the RFA of 1980, and the Small Business Regulatory Enforcement Fairness Act of 1996, which amended the RFA, the Secretary certifies that this rule will not have a significant impact on a substantial number of small entities.

The Secretary has also determined that this proposed interim final rule does not meet the criteria for a major rule as defined by Executive Order 12866 and would have no major effect on the economy or Federal expenditures. The Secretary has determined that the proposed interim final rule is not a ''major rule'' within the meaning of the statute providing for Congressional Review of Agency Rulemaking, 5 U.S.C. 801. Similarly, it will not have effects on State, local, and tribal governments and on the private sector such as to require consultation under the Unfunded Mandates Reform Act of 1995.

The Secretary has also reviewed this rule in accordance with Executive Order 13132 regarding federalism, and has determined that it does not have ''federalism implications.'' The rule does not ''have substantial direct effects on the States, or on the relationship between the national government and the States, or on the distribution of power and responsibilities among the various levels of government.''

On the basis of family well-being, the provisions of this interim final rule will not affect the following family elements: family safety, family stability, marital commitment; parental rights in the education, nurture and supervision of their children; family functioning, disposable income or poverty; or the behavior and personal responsibility of youth, as determined under section 654(c) of the Treasury and General Government Appropriations Act of 1999.

Impact of the New Rule

In this interim final rule, the Secretary establishes a Smallpox (Vaccinia) Vaccine Injury Table identifying injuries that shall be presumed to result from the administration of or exposure to the smallpox vaccine, and the time interval in which the onset of the first symptom or manifestation of each such injury must manifest in order for such presumption to apply. The Secretary also is providing Table Definitions and Requirements. This interim final rule is based upon legal authority. This interim final rule will have the effect of affording certain persons a presumption that particular injuries were sustained as the result of the administration of or exposure to the smallpox vaccine. Because the Table establishes a presumption of causation, it relieves requesters of the burden of demonstrating causation for covered events.

Paperwork Reduction Act of 1995, as Amended

This interim final rule has no information collection requirements.

List of Subjects in 42 CFR Part 102

Benefits, Biologics, Compensation, Immunization, Public health, Smallpox, Vaccinia.

Dated: July 18, 2003.

Elizabeth M. Duke,

Administrator, Health Resources and Services Administration.

Approved: July 22, 2003.

Tommy G. Thompson,

Secretary.

■ For the reasons stated above, the Department of Health and Human Services adds to Subchapter J of Chapter I of Title 42 CFR, a new part 102 to read as follows:

PART 102—SMALLPOX COMPENSATION PROGRAM

Sec.
102.1–102.20. [Reserved]
102.21 Smallpox (Vaccinia) Vaccine Injury Table.

Authority: Sec. 215 of the Public Health Service Act (42 U.S.C. 216); sec. 263 of the PHS Act, as amended, Public Law No. 108–20, 117 Stat. 638.

§102.21 Smallpox (Vaccinia) Vaccine Injury Table.

(a) SMALLPOX (VACCINIA) VACCINE INJURY TABLE

Injury (illness, disability, injury, or condition)	Time interval for first symptom or manifestation of onset of injury after: (1) administration of smallpox (vaccinia) vaccine in recipients (R); or (2) exposure to vaccinia in contacts (C)
1. Significant Local Skin Reaction	R or C: 1–21 days.
2. Stevens-Johnson Syndrome	R or C: 1–21 days.
3. Inadvertent Inoculation	R or C: 1–21 days.
4. Generalized Vaccinia	R or C: 1–21 days.
5. Eczema Vaccinatum	R or C: 1–21 days.
6. Progressive Vaccinia	R or C: 1–21 days.
7. Postvaccinial Encephalopathy, Encephalitis or Encephalomyelitis	R or C: 1–21 days.
8. Fetal Vaccinia	Maternal R or C: any time in gestation until 7 days after birth.
9. Secondary Infection	R or C: 0–30 days.
10. Anaphylaxis or Anaphylactic Shock	R: 0–4 hours. C: Not Covered.
11. Vaccinial Myocarditis, Pericarditis, or Myopericarditis	R or C: 1–21 days.
12. Death resulting from an injury referred to above in which the injury arose within the time interval referred to above (except as specifically provided in specified paragraph (b) of this section).	R or C: No time interval specified.

(b) *Table Definitions and Requirements*

The Table Definitions that follow shall apply to, define and describe the scope of, and be read in conjunction with paragraph (a) of this section.

(1) *Significant local skin reaction.*—(i) *Definition.* Significant local skin reaction is, for purposes of the Table, an unexpected and extreme response at the vaccination or inoculation site that results in a significant scar that is serious enough to require surgical intervention. The onset of this injury is the initial skin lesion at the vaccination or inoculation site that generally occurs with smallpox vaccinations or inoculations. Minor scarring or minor local reactions do not constitute a Table injury. Even a robust take, defined as an area of redness at the vaccination site that exceeds 7.5 cm in diameter with associated swelling, warmth and pain, in general is considered an expected response to the vaccination or inoculation. A robust take does not in itself constitute a Table injury, even when the redness and swelling involves the entire upper arm with associated enlargement and tenderness of the glands (lymph nodes) in the underarm (axilla).

(ii) *Table requirements.* A Table injury for a significant local skin reaction in a recipient or contact requires sufficient evidence in the medical records of the occurrence of a significant local skin reaction at the vaccination or inoculation site and a permanent, disfiguring scar that resulted from the significant local skin reaction. The scar must be of sufficient severity to require surgical intervention to correct a significant cosmetic (*e.g.*, keloid) or functional (*e.g.*, contracture) deformity and such surgery must be included in the treatment plan documented in the medical records.

(2) *Stevens-Johnson Syndrome (SJS).*—(i) *Definition.* SJS (sometimes called erythema multiforme major) is an acute hypersensitivity reaction that affects skin, mucous membranes, and sometimes internal organs (systemic toxicity). For purposes of the Table, both skin and mucous membrane rash or lesions must be present and the rash or lesions may not cover less than ten percent of body surface area. In SJS, mucosal involvement generally predominates. Mucosal lesions generally occur at more than one location and manifest as painful lesions in sites such as the mouth or eyes. Skin rash or lesions in SJS usually consist of red raised areas (erythematous macules), blisters, and ulcerations.

(ii) *Table requirements.* A Table injury for SJS in a recipient or contact requires sufficient evidence in the medical records of the occurrence of SJS. The SJS, or related complications, must be of sufficient severity to require inpatient hospitalization.

(3) *Inadvertent Inoculation (II).*—(i) *Definition.* II is the spread of vaccinia virus from an existing vaccination or inoculation site to a second location usually by scratching the vaccination or inoculation site and subsequently spreading the virus, which produces a new vaccinial lesion on the same person. Alternatively, II is the spread of vaccinia virus from an existing vaccination or inoculation site to another person usually by scratching an existing vaccination or inoculation site and subsequently spreading the virus, resulting in a contact case.

(ii) *Table requirements.* A Table injury for II in a recipient or contact requires sufficient evidence in the medical records of the occurrence of II and the occurrence of one of the following:

(A) Eye lesions, *e.g.*, vaccinial keratitis or vaccinial blepharitis, that resulted from II and that led to a permanent sequela, *e.g.*, decrease in visual acuity;

(B) Permanent and disfiguring scar(s) that resulted from II. The scar(s) must be of sufficient severity to require surgical intervention to correct a significant cosmetic (*e.g.*, keloid) or functional (*e.g.*,

contracture) deformity and such surgery must be included in the treatment plan documented in the medical records; or

(C) Acute II or related complications of sufficient severity to require inpatient hospitalization.

(4) *Generalized Vaccinia (GV).*—(i) *Definition.* GV is a vaccinial infection that occurs from the spread of vaccinia from an existing vaccination or inoculation site to otherwise normal skin, resulting in multiple new areas of vaccinial rash or lesions. The vaccinia is believed to be spread through the blood. The rash or lesions are characterized by multiple blisters (vesicles or pustules) that generally evolve in a similar sequence or manner as the original vaccination or inoculation site.

(ii) *Table requirements.* A Table injury for GV in a recipient or contact requires sufficient evidence in the medical records of the occurrence of GV and the occurrence of one of the following:

(A) Permanent and disfiguring scar(s) that resulted from GV. The scar(s) must be of sufficient severity to require surgical intervention to correct a significant cosmetic (*e.g.*, keloid) or functional (*e.g.*, contracture) deformity and such surgery must be included in the treatment plan documented in the medical records; or

(B) Acute GV or related complications of sufficient severity to require inpatient hospitalization.

(5) *Eczema Vaccinatum (EV)*—(i) *Definition.* EV is the transmission or the spread of vaccinia virus from a vaccination or inoculation site to skin that has been affected by, or is currently affected with, eczema or atopic dermatitis. EV is characterized by lesions that include multiple blisters (vesicles or pustules), which generally evolve in a similar sequence or manner as the original vaccination or inoculation site. The lesions may come together to form larger lesions. Lesions may also spread to patches of skin that have never been involved with eczema or atopic dermatitis. A person with EV may be quite ill with signs and symptoms that involve the whole body (systemic illness), such as fever, malaise, or enlarged glands (lymph nodes).

(ii) *Table requirements.* A Table injury for EV in a recipient or contact requires sufficient evidence in the medical records of the occurrence of EV and the occurrence of one of the following:

(A) Permanent and disfiguring scar(s) that resulted from EV. The scar(s) must be of sufficient severity to require surgical intervention to correct a significant cosmetic (*e.g.*, keloid) or functional (*e.g.*, contracture) deformity and such surgery must be included in the treatment plan documented in the medical records; or

(B) Acute EV or related complications of sufficient severity to require inpatient hospitalization.

(6) *Progressive Vaccinia (PV).*—(i) *Definition.* PV is the failure to initiate the healing process in an initial vaccination or inoculation site by 21 days after exposure to vaccinia with progressive ulceration or necrosis at the vaccination or inoculation site leading to a large destructive ulcer. PV is seen in people with an impaired immune system (immunocompromised) and is characterized by a complete or near complete lack of inflammation or absence of inflammatory cells in the dermis of the skin at the vaccination or inoculation site. The diagnosis of PV may be made before 21 days after exposure, especially in a known immunocompromised individual who develops a lesion at the vaccination or inoculation site. PV may spread through the blood to any location in the body. Any person who initiates a significant healing process of the vaccination or inoculation site by 21 days after receipt of the smallpox vaccine or exposure to vaccinia does not have PV.

(ii) *Table requirements.* A Table injury for PV in a recipient or contact requires sufficient evidence in the medical records of the occurrence of PV and the occurrence of one of the following:

(A) Permanent and disfiguring scar(s) that resulted from PV. The scar(s) must be of sufficient severity to require surgical intervention to correct a significant cosmetic (*e.g.*, keloid) or functional (*e.g.*, contracture) deformity and such surgery must be included in the treatment plan documented in the medical records; or

(B) Acute PV or related complications of sufficient severity to require inpatient hospitalization.

(7) *Postvaccinial Encephalopathy, Encephalitis or Encephalomyelitis (PVEM).*—(i) *Definition.* PVEM is, for the purposes of the Table, an autoimmune central nervous system injury. In rare cases, the vaccinia virus is isolated from the central nervous system. Manifestations usually occur abruptly and may include fever, vomiting, loss of appetite (anorexia), headache, general malaise, impaired consciousness, confusion, disorientation, delirium, drowsiness, seizures, language difficulties (aphasia), coma, muscular incoordination (ataxia), urinary incontinence, urinary retention, and clinical signs consistent with inflammation of the spinal cord (myelitis) such as paralysis or meningismus. Long term central nervous system impairments such as paralysis, seizure disorders, or developmental delays are known to occur as sequelae of the acute PVEM. No clinical criteria, radiographic findings, or laboratory tests are specific for the diagnosis of PVEM.

(ii) *Table Requirements.* A Table injury for PVEM in a recipient or contact requires sufficient evidence in the medical records of the occurrence of acute PVEM. The acute PVEM or related complications must be of sufficient severity to require inpatient hospitalization.

(8) *Fetal Vaccinia (FV).*—(i) *Definition.* FV is an intrauterine vaccinial infection subsequent to vaccinia vaccination or inoculation of the mother that results from the placental transmission of the vaccinia virus during any time in the pregnancy. FV manifests as multiple skin lesions or organ involvement and may result in significant scarring or death. FV skin lesions are similar to those seen in GV or PV and the lesions may come together to form larger lesions. Congenital malformations, other than those described above, are not Table injuries.

(ii) *Table requirements.* A Table injury for FV requires sufficient evidence in the medical records of the occurrence of the FV. The occurrence of the FV or related complications must be of sufficient severity to require inpatient hospitalization or result in permanent and disfiguring scar(s). In addition, a Table injury for FV requires one of the following:

(A) A maternal history of vaccinial vaccination or inoculation, with the occurrence of vaccinial skin or mucous membrane lesions within the incubation period for vaccinia during the pregnancy in a maternal recipient or contact; or

(B) Isolation of vaccinia from intrauterine or neonatal tissue.

(9) *Secondary Infection (SI).*—(i) *Definition.* SI is, for purposes of the Table, a non-vaccinial bacterial, fungal, or viral infection at the site of a vaccinial skin or mucous membrane lesion. SI occurs because the blister formation or ulceration that is part of the normal progression of a vaccinial skin or mucous membrane lesion disrupts the surface of the skin or mucous membrane, allowing potential germs to invade and infect the vaccinial skin or mucous membrane lesion leading to significant illness requiring hospitalization.

(ii) *Table requirements.* A Table injury for SI in a recipient or contact

requires sufficient evidence in the medical records of the occurrence of SI. The acute SI or related complications must be of sufficient severity to require inpatient hospitalization.

(10) *Anaphylaxis or Anaphylactic shock.*—(i) *Definition.* Anaphylaxis or anaphylactic shock is, for purposes of the Table, as an acute, severe, and potentially lethal systemic allergic reaction to a component of the smallpox vaccine.

(ii) *Table requirements.* A Table injury for anaphylaxis or anaphylactic shock in a recipient requires sufficient evidence in the medical records of the occurrence of an acute anaphylaxis or anaphylactic shock. The anaphylaxis or anaphylactic shock must be of sufficient severity to require inpatient hospitalization. Anaphylaxis or anaphylactic shock is not a Table injury for contacts.

(11) *Vaccinial Myocarditis, Pericarditis, or Myopericarditis (MP).*—(i) *Definition.* MP is, for purposes of the Table, vaccinial myocarditis, pericarditis, or myopericarditis. Myocarditis is defined as an inflammation of the heart muscle (myocardium). Pericarditis is defined as an inflammation of the covering of the heart (pericardium). Myopericarditis is defined as an inflammation of both the heart muscle and its covering. The inflammation associated with MP may range in severity from very mild (subclinical) to life threatening. In many mild cases, myocarditis is diagnosed solely by transient electrocardiographic (EKG) abnormalities (*e.g.*, ST segment and T wave changes), increased cardiac enzymes, or mild echocardiographic abnormalities. Arrhythmias, abnormal heart sounds, heart failure, and death may occur in more severe cases. Pericarditis generally manifests with chest pain, abnormal heart sounds (pericardial friction rub), EKG abnormalities (*e.g.*, ST segment and T wave changes), and/or increased fluid accumulation around the heart.

(ii) *Table requirements.* A Table injury for MP in a recipient or contact requires sufficient evidence in the medical records of the occurrence of acute MP. The acute MP (or related complications) must be of sufficient severity to require inpatient hospitalization. A death resulting from MP requires sufficient microscopic (histopathologic) evidence of MP or its sequela in heart tissue.

(c) *Glossary for Purposes of This Section*

(1) *Blister or vesicle* means a circumscribed, elevated skin or mucous membrane lesion containing an accumulation of fluid.

(2) *Contact* means a person who developed a vaccinial lesion or infection through inoculation (and not vaccination).

(3) *Exposure period* means the span of time during which vaccinia virus can be transmitted from a vaccine recipient shedding vaccinia or through a contact case shedding vaccinia.

(4) *Inoculation* means transmission of and infection with the vaccinia virus through a means other than smallpox vaccination. Spread (inoculation) of vaccinia virus may occur in two ways: either self-inoculation in which the vaccinia virus is spread from the vaccinial lesion at the vaccination site to one or more areas on the same person or person-to-person inoculation when the vaccinia virus is spread to another person, a contact.

(5) *Inoculation site* means the skin or mucous membrane surface where the vaccinia virus entered the body through means other than vaccination.

(6) *Lesion* means a pathologic change.

(7) *Pustule* means a circumscribed, elevated skin or mucous membrane lesion containing an accumulation of white blood cells.

(8) *Recipient* means a person to whom the smallpox vaccine was administered.

(9) *Ulceration* means a specific skin or mucous membrane lesion characterized by erosion of the skin or mucous membrane surface.

(10) *Vaccination* means the administration and receipt of the smallpox (vaccinia) vaccine, and not through contact.

(11) *Vaccination* site means the skin surface where the vaccinia virus entered the body through vaccination.

[FR Doc. 03–21906 Filed 8–26–03; 8:45 am]

BILLING CODE 4165–15–P

DEPARTMENT OF HOMELAND SECURITY

Coast Guard

46 CFR Part 1

[USCG 2003–15137]

RIN 1625–AA71

Right To Appeal; Director, Great Lakes Pilotage

AGENCY: Coast Guard, DHS.

ACTION: Direct final rule; confirmation of effective date.

SUMMARY: On June 23, 2003, we published a direct final rule that notified the public of the Coast Guard's intent to amend its appellate procedures to provide explicit authority for appeal of decisions or actions taken by the Director, Great Lakes Pilotage. We have not received an adverse comment, or notice of intent to submit an adverse comment, on this rule. Therefore, the rule will go into effect as scheduled.

DATES: The effective date of the direct final rule is confirmed as August 22, 2003.

FOR FURTHER INFORMATION CONTACT: If you have questions on this rule, call Mr. Tom Lawler, Coast Guard, telephone 202–267–1241. If you have questions on viewing the docket, call Andrea M. Jenkins, Program Manager, Docket Operations, Department of Transportation, telephone 202–366–0271.

SUPPLEMENTARY INFORMATION: On June 23, 2003, we published a direct final rule [68 FR 37091] that notified the public of the Coast Guard's intent to amend its appellate procedures to provide explicit authority for appeal of decisions or actions taken by the Director, Great Lakes Pilotage. We have not received an adverse comment, or notice of intent to submit an adverse comment, on this rule. Therefore, the rule will go into effect as scheduled.

Dated: August 21, 2003.

T.H. Gilmour,

Rear Admiral, U.S. Coast Guard, Assistant Commandant for Marine Safety, Security and Environmental Protection.

[FR Doc. 03–21966 Filed 8–26–03; 8:45 am]

BILLING CODE 4910–15–P

FEDERAL COMMUNICATIONS COMMISSION

47 CFR Parts 1 and 25

[IB Docket Nos. 02–34 and 02–54, FCC 03–102]

Satellite Licensing Procedures

AGENCY: Federal Communications Commission.

ACTION: Final rule.

SUMMARY: In this document, the Commission adopts new satellite licensing procedures, intended to enable the Commission to issue satellite slicenses more quickly. In addition, the Commission eliminates the anti-trafficking rule for satellites, together with new safeguards to protect against speculation. These actions are necessary to expedite provision of satellite services to the public, without allowing satellite license applicants to abuse the Commission's licensing procedures.

DATES: Effective August 27, 2003, except for §§ 25.137(d)(4), 25.164 (c) through

(e), and 25.165 which will become effective September 11, 2003. The Commission has adopted a freeze on new satellite applications. This freeze is terminated as of August 27, 2003.

FOR FURTHER INFORATION CONTACT: Steven Spaeth, Attorney Advisor, Satellite Division, International Bureau, telephone (202) 418–1539 or via the Internet at *steven.spaeth@fcc.gov.*

SUPPLMENTARY INFORMATION: This summary of the Commission's First Report and Order, IB Docket Nos. 02–34 & 02–54, FCC 03–102, adopted April 23, 2003, and released on May 19, 2003. The complete text of this First Report and Order is available for inspection and copying during normal business hours in the FCC Reference Center (Room CY-A257), 445 12th Street, SW., Washington, DC 20554, and also may be purchased from the Commission's copy contractor, Qualex International, Portals II, 445 12th Street, SW, Room CY–B402, Washington, DC 20554, telephone (202) 863–2893, facsimile (202) 863–2898 or via e-mail *qualexint@lol.com*. It is also available on the Commission's Web site at *http://www.fcc.gov*.

Paperwork Reduction Act Analysis: The actions taken in the First Report and Order have been analyzed with respect to the Paperwork Reduction Act of 1995 (PRA), Pub. L. 104–13, and §§ 25.137(d)(4), 25.164(c) through (e), and 25.165 have been found to impose new or modified reporting requirements or burdens on the public. Implementation of these new or modified reporting and recordkeeping requirements has been approved by the Office of Management and Budget (OMB). OMB granted approval for this information collection by means of a Notice of Action for collection number 3060–1007 dated August 13, 2003.

Regulatory Flexibility Analysis: As required by the Regulatory Flexibility Act (RFA),[1] an Initial Regulatory Flexibility Analysis (IRFA) was incorporated in the Notice of Proposed Rule Making (NPRM) in IB Docket No. 02–34.[2] The Commission sought written public comment on the proposals in the NPRM, including comment on the IRFA. This Final Regulatory Flexibility Analysis (FRFA) conforms to the RFA.[3]

Need for, and Objectives of, the Proposed Rules. The objective of the proposed rules is to discourage parties from filing ''speculative'' satellite applications, *i.e.*, applying for a satellite license without intending to construct the satellite facilities. These rule revisions are needed because speculative satellite applications can delay or preclude other parties from obtaining a satellite license and providing service to the public.

Summary of Significant Issues Raised by Public Comments In Response to the IRFA. No comments were submitted in response to the IRFA.

Description and Estimate of the Number of Small Entities To Which Rules Will Apply. The RFA directs agencies to provide a description of, and, where feasible, an estimate of, the number of small entities that may be affected by the proposed rules, if adopted.[4] The RFA generally defines the term ''small entity'' as having the same meaning as the terms ''small business,'' ''small organization,'' and ''small governmental jurisdiction.''[5] In addition, the term ''small business'' has the same meaning as the term ''small business concern'' under the Small Business Act.[6] A small business concern is one which: (1) is independently owned and operated; (2) is not dominant in its field of operation; and (3) satisfies any additional criteria established by the Small Business Administration (SBA).[7] A small organization is generally ''any not-for-profit enterprise which is independently owned and operated and is not dominant in its field.''[8] Nationwide, as of 1992, there were approximately 275,801 small organizations.[9] ''Small governmental jurisdiction'' generally means ''governments of cities, counties, towns, townships, villages, school districts, or special districts, with a population of less than 50,000.''[10] As of 1992, there were approximately 85,006 such jurisdictions in the United States.[11] This number includes 38,978 counties, cities, and towns; of these, 37,566, or 96 percent, have populations of fewer than 50,000. The Census Bureau estimates that this ratio is approximately accurate for all governmental entities. Thus, of the 85,006 governmental entities, we estimate that 81,600 (91 percent) are small entities. Below, we further describe and estimate the number of small entity licensees that may be affected by the proposed rules, if adopted.

The rules adopted in this *First Report and Order* affect satellite operators. The Commission has not developed a definition of small entities applicable to satellite operators. Therefore, the applicable definition of small entity is generally the definition under the SBA rules applicable to Satellite Telecommunications.[12] This definition provides that a small entity is expressed as one with $11.0 million or less in annual receipts.[13] 1997 Census Bureau data indicate that, for 1997, 273 satellite communication firms had annual receipts of under $10 million. In addition, 24 firms had receipts for that year of $10 million to $24,999,990.[14]

In addition, Commission records reveal that there are approximately 240 space station operators licensed by this Commission. We do not request or collect annual revenue information, and thus are unable to estimate of the number of licensees that would constitute a small business under the SBA definition. Small businesses may not have the financial ability to become space station licensees because of the high implementation costs associated with satellite systems and services.

Description of Projected Reporting, Recordkeeping, and Other Compliance Requirements. In this *First Report and Order*, the Commission adopts a mandatory electronic filing requirement for space station license applicants. The Commission believes that filing satellite license applications electronically is no more burdensome than submitting paper applications, because a majority

[1] *See* 5 U.S.C. 603. The RFA, *see* 5 U.S.C. 601—612, has been amended by the Small Business Regulatory Enforcement Fairness Act of 1996 (SBREFA), Pub. L. No. 104–121, Title II, 110 Stat. 857 (1996).

[2] Amendment of the Commission's Space Station Licensing Rules and Policies, *Notice of Proposed Rulemaking,* IB Docket No. 02–34, 67 FR 12498 (Mar. 19, 2002) (*NPRM*).

[3] *See* 5 U.S.C. 604.

[4] 5 U.S.C. 604(a)(3).

[5] *Id* 601(6).

[6] 5 U.S.C. 601(3) (incorporating by reference the definition of ''small business concern'' in 15 U.S.C. 632). Pursuant to the RFA, the statutory definition of a small business applies ''unless an agency, after consultation with the Office of Advocacy of the Small Business Administration and after opportunity for public comment, establishes one or more definitions of such term which are appropriate to the activities of the agency and publishes such definition(s) in the **Federal Register**.''

[7] Small Business Act, 15 U.S.C. 632 (1996).

[8] 5 U.S.C. 601(4).

[9] 1992 Economic Census, U.S. Business of the Census, Table 6 (special tabulation of data under contract to Office of the Advocacy of the U.S. Small Business Administration).

[10] 5 U.S.C. 601(5).

[11] U.S. Dept. of Commerce, Bureau of the Census, ''1992 Census of Governments.''

[12] ''This industry comprises establishes primarily engaged in providing point-to-point telecommunications services to other establishes in the telecommunications and broadcasting industries by forwarding and receiving communications signals via a system of satellites or reselling satellite telecommunications.'' Small Business Administration, 1997 NAICS Definitions, NAICS 513340.

[13] 13 CFR 120.121, NAICS code 513340.

[14] U.S. Census Bureau, 1997 Economic Census, Subject Service: Information, ''Establishment and Firm Size,'' Table 4, NAICS 513340 (Issued Oct. 2000).

of satellite applicants currently file their applications electronically on a voluntary basis.

None of the other rules adopted in this *First Report and Order* are expected to increase the reporting, record keeping and other compliance requirements of any licensee.

Steps Taken to Minimize Significant Economic Impact on Small Entities, and Significant Alternatives Considered. The RFA requires an agency to describe any significant alternatives that it has considered in developing its approach, which may include the following four alternatives (among others): ''(1) The establishment of differing compliance or reporting requirements or timetables that take into account the resources available to small entities; (2) the clarification, consolidation, or simplification of compliance and reporting requirements under the rule for such small entities; (3) the use of performance rather than design standards; and (4) an exemption from coverage of the rule, or any part thereof, for such small entities.''[15]

In this proceeding, we adopt rule revisions designed to allow the Commission to issue satellite licenses faster than is now possible, which will enable satellite operators to provide service faster, and to attract investors faster. This will have a positive economic impact on all satellite licensees, including small entities.

In the *NPRM*, the Commission proposed applying a first-come, first-served procedure to all satellite applications, including non-geostationary satellite applications. In the *First Report and Order*, the Commission concluded that applying a first-come, first-served procedure to non-geostationary satellite applications could enable one applicant to unreasonably exclude others, including small entities, from the market. Accordingly, the Commission rejected this proposal.

Report to Congress: The Commission will send a copy of the *First Report and Order*, including this FRFA, in a report to be sent to Congress pursuant to the Congressional Review Act, *see* 5 U.S.C. 801(a)(1)(A). In addition, the Commission will send a copy of the *First Report and Order,* including FRFA, to the Chief Counsel for Advocacy of the Small Business Administration. A copy of the *First Report and Order* and FRFA (or summaries thereof) will also be published in the **Federal Register**. *See* 5 U.S.C. 604(b).

Summary of Report and Order: In this document, the Commission adopts new satellite licensing procedures, intended to enable the Commission to issue satellite licenses more quickly. First, the Commission establishes a queue for satellite applications, based on the date and time they are filed. If an application is filed before a needed international frequency allocation is adopted, the application will be returned as premature. If an application is filed before a needed domestic frequency allocation is adopted, the application will be considered only pursuant to a waiver of the Table of Frequency Allocations, 47 CFR 2.106. If an application is filed after international and domestic frequency allocations are adopted, but before the Commission adopts service-band specific service rules, the application will be considered only subject to default service rules adopted in the *First Report and Order*. Included in those default service rules is a requirement for the applicant to disclose its orbital debris mitigation proposals, if any. This requirement is based on the record in IB Docket No. 02–54. In addition, as explained further below, the Commission adopts different procedures for non-geostationary satellite orbit (NGSO) satellite system applications and geostationary satellite orbit (GSO) applications. If an applicant files an application before there are GSO/NGSO sharing criteria for that band, then we will consider only GSO applications or NGSO applications, depending on which is filed first, until the Commission adopts sharing criteria. If a GSO application and an NGSO application are filed at the same time, the band will be split proportionally between GSOs and NGSOs.

Second, the Commission adopts different procedures for different types of satellite applications. When a non-geostationary satellite orbit (NGSO) application or a geostationary satellite orbit (GSO) Mobile Satellite Service (MSS) application (together, ''NGSO-like'') reaches the front of the queue, the Commission starts a modified processing round, and divides the available spectrum equally among all the qualified applicants. If a licensee loses or surrenders its license, the spectrum assigned to that licensee will be reassigned to the remaining licensees, unless the number of remaining licensees is sufficient to make reasonably efficient use of the frequency band. The Commission presumes that this number is three. In this case, the Commission will announce another processing round for the newly available spectrum. Similarly, the Commission will start another processing round if there are fewer than three qualified applicants in the initial processing round.

When a non-geostationary satellite (GSO) application other than a GSO MSS application reaches the front of the queue, the Commission considers it on a first-come, first-served basis. The Commission will grant each of those applications if the applicant is qualified, and the proposed satellite would not conflict with any other previously licensed satellite. If two or more qualified GSO-like applications are filed at the same thousandth of a second, the Commission will divide the spectrum equally among the qualified applicants at that orbit location. If a GSO-like licensee loses its license, that orbit location will become available for another GSO-like applicant on a first-come, first-served basis.

For both the modified processing round and first-come, first-served procedures, the Commission revises its rules for amendments to satellite applications and modifications to satellite licenses.

In addition, the Commission eliminates the anti-trafficking rule for satellites, together with new safeguards to protect against speculation. By eliminating the anti-trafficking rule, the Commission will no longer review transfer of control applications to determine whether the transaction is the sale of a bare license for profit. The Commission will still review such applications to determine whether the transaction will further the public interest, convenience, and necessity.

Together with the elimination of the anti-trafficking rule, the Commission adopts safeguards to protect against speculation. First, the Commission replaces the financial qualification rules with a bond requirement. Formerly, the Commission required satellite license applicants to show that they have financing available to construct and launch the satellite and operate it for one year. Here, the Commission replaces that requirement with a requirement that licensees post a bond within 30 days of grant of the license, payable upon missing a milestone. The bond amount is $7.5 million for NGSO-like applications, and $5 million for GSO-like applications. The amount of the bond may be reduced when the licensee meets each of its milestones.

The Commission also adopts new milestones. The NGSO-like milestones are now: (1) Contract execution; (2) critical design review; (3) commencement of construction; (4) launch; and (5) bring entire system into operation. The GSO-like milestones are (1) contract execution; (2) critical design review; (3) commencement of

[15] 5 U.S.C. 603(c)(1)–(c)(4).

construction; and (4) launch. In addition, the Commission adopts information requirements for licensees to demonstrate that they have met each of the new milestones.

To protect further against speculative applications, the Commission adopts a limit on the number of pending applications and unbuilt satellites any applicant may have in any frequency band. Those limits are five GSO orbit locations and one NGSO satellite system. So that applicants do not undercut the policy goals of these limits, the Commission also adopts an attribution rule prohibiting a party from filing a satellite application if it holds more than 33 percent of the total asset value of applicants with applications for five GSO orbital locations, and one NGSO satellite system, in any frequency band, pending before the Commission. Stricter limits apply to applicants who establish a pattern of missing milestones. Applicants who have established such a pattern, and have two or more applications pending, or two licensed-but-unbuilt satellite systems of any kind, will not be permitted to file another GSO-like application or NGSO-like application in any frequency band.

In addition to these safeguards, the Commission prohibits applicants from selling their place in the queue, and require applications to be substantially complete.

The Commission adopts a number of other provisions in this *First Report and Order.* First, the Commission adopts mandatory electronic filing of space station applications. Second, the Commission creates a streamlined procedure for replacement satellite applications. Third, the Commission revises its full frequency reuse requirements. The Commission also extends the license terms of certain satellite licenses from 10 to 15 years. Finally, the Commission established a freeze on new satellite applications. This freeze is terminated as of August 27, 2003.

In addition, the Commission revises the procedures for non-U.S.-licensed satellite operators seeking access to the U.S. market, to be consistent with the new procedures for U.S. license applications. The Commission also adopted provisions for Permitted List satellite modifications, replacements of Permitted List satellites, and changes of ownership of satellites on the Permitted List.

Ordering Clauses

Accordingly, *it is ordered*, pursuant to sections 1, 2, 4(i), 4(j), 7(a), 11, 301, 303(c), 303(f), 303(g), and 303(r) of the Communications Act of 1934, as amended, 47 U.S.C. 151, 152, 154(i), 154(j), 157(a), 161, 301, 303(c), 303(f), 303(g), 303(r), that this *First Report and Order* in IB Docket Nos. 02–34 and 02–54 is hereby *adopted*.

It is further ordered that parts 1 and 25 of the Commission's rules *are amended*.

It is further ordered that the provisions of this *First Report and Order* in IB Docket Nos. 02–34 and 02–54, other than §§ 25.137(d)(4), 25.164(c) through (e), and 25.165, will be effective August 27, 2003.

It is further ordered that §§ 25.137(d)(4), 25.164(c) through (e), and 25.165, as adopted in this *First Report and Order,* will be effective September 11, 2003.

It is further ordered that, effective upon the adoption date of this *First Report and Order* in IB Docket Nos. 02–34 and 02–54, no applications for space station licenses for any satellite service addressed in this *First Report and Order* will be accepted for filing. This freeze will continue until August 27, 2003.

It is further ordered that the license term of each space station license issued on or before April 17, 2002, and in effect on the release date of this Order, *is hereby extended* to 15 years, starting on the date the licensee certified to the Commission that the space station was successfully placed in orbit and its operations fully conform to the terms and conditions of its authorization.

It is further ordered that the Consumer Information Bureau, Reference Information Center, *shall send* a copy of this *First Report and Order* in IB Docket Nos. 02–34 and 02–54, including the Final Regulatory Flexibility Analysis, to the Chief Counsel for Advocacy of the Small Business Administration.

List of Subjects

47 CFR Part 1

Administrative Practice and Procedure.

47 CFR Part 25

Satellites.

Federal Communications Commission.

Marlene H. Dortch,

Secretary.

■ For the reasons discussed in the preamble, the Federal Communications Commission amends 47 CFR parts 1 and 25 as follows:

PART 1—PRACTICE AND PROCEDURE

■ 1. The authority citation for part 1 continues to read as follows:

Authority: 47 U.S.C. 151, 154(i), 154(j), 155, 225, 303(r), 309 and 325(e).

■ 2. Amend § 1.1113 by adding paragraph (d) to read as follows:

§ 1.1113 Return or refund of charges.

* * * * *

(d) Applicants for space station licenses under the first-come, first served procedure set forth in part 25 of this title will be entitled to a refund of the fee if, before the Commission has placed the application on public notice, the applicant notifies the Commission that it no longer wishes to keep its application on file behind the licensee and any other applicants who filed their applications before its application, and specifically requests a refund of the fee and dismissal of its application.

PART 25—SATELLITE COMMUNICATIONS

■ 3. The authority citation for part 25 continues to read as follows:

Authority: 47 U.S.C. 701–744. Interprets or applies Sections 4, 301, 302, 303, 307, 309, and 332 of the Communications Act, as amended, 47 U.S.C. Sections 154, 301, 302, 303, 307, 309, 332, unless otherwise noted.

■ 4. Amend § 25.112 by adding paragraph (a)(3) and revising paragraph (b) introductory text to read as follows:

§ 25.112 Defective applications.

(a) * * *

(3) The application requests authority to operate a space station in a frequency band that is not allocated internationally for such operations under the Radio Regulations of the International Telecommunication Union.

(b) Applications for space station authority found defective under paragraph (a)(3) of this section will not be considered. Applications for authority found defective under paragraphs (a)(1) or (a)(2) of this section may be accepted for filing if:

* * * * *

■ 5. Amend § 25.113 by revising paragraph (g) to read as follows:

§ 25.113 Construction permits, station licenses, launch authority.

* * * * *

(g) A launch authorization and station license (*i.e.*, operating authority) must be applied for and granted before a space station may be launched and operated in orbit. Request for launch authorization may be included in an application for space station license. However, an application for authority to launch and operate an on-ground spare satellite will be considered pursuant to the following procedures:

(1) Applications for launch and operation of an on-ground spare NGSO-

like satellite will be considered pursuant to the procedures set forth in § 25.157, except as set forth in paragraph (g)(3) of this section.

(2) Applications for launch and operation of an on-ground spare GSO-like satellite will be considered pursuant to the procedures set forth in § 25.158, except as set forth in paragraph (g)(3) of this section.

(3) Neither paragraph (g)(1) nor (g)(2) of this section will apply in cases where the space station to be launched is determined to be an emergency replacement for a previously authorized space station that has been lost as a result of a launch failure or a catastrophic in-orbit failure.

■ 6. Amend § 25.114 by revising paragraph (b) and removing and reserving paragraph (c)(13), to read as follows:

§ 25.114 Applications for space station authorizations.

* * * * *

(b) Each application for a new or modified space station authorization must constitute a concrete proposal for Commission evaluation. Each application must also contain the formal waiver required by section 304 of the Communications Act, 47 U.S.C. 304. The technical information for a proposed satellite system need not be filed on any prescribed form but should be complete in all pertinent details. Applications for new space station authorizations other than authorizations for the Direct Broadcast Service (DBS) and Digital Audio Radio Satellite (DARS) service must be filed electronically through the International Bureau Filing System (IBFS).

(c) * * *

(13) [Reserved]

* * * * *

7. Amend § 25.116 by removing and reserving paragraph (b)(3); adding paragraph (b)(5); revising paragraph (c) introductory text; redesignating paragraph (d) as (e); and adding new paragraph (d) to read as follows:

§ 25.116 Amendments to applications.

* * * * *

(b) * * *

(3) [Reserved]

* * * * *

(5) Amendments to ''defective'' space station applications, within the meaning of § 25.112 will not be considered.

(c) Any application for an NGSO-like satellite license within the meaning of § 25.157 will be considered to be a newly filed application if it is amended by a major amendment (as defined by paragraph (b) of this section) after a ''cut-off'' date applicable to the application, except under the following circumstances:

* * * * *

(d) Any application for a GSO-like satellite license within the meaning of § 25.158 will be considered to be a newly filed application if it is amended by a major amendment (as defined by paragraph (b) of this section), and will cause the application to lose its status relative to later-filed applications in the ''queue'' as described in § 25.158.

* * * * *

■ 8. Amend § 25.117 by redesignating paragraph (d) as (d)(1), and adding paragraph (d)(2) to read as follows:

§ 25.117 Modification of station license.

* * * * *

(d) * * *

(2) Applications for modifications of space station authorizations will be granted except under the following circumstances:

(i) Granting the modification would make the applicant unqualified to operate a space station under the Commission's rules.

(ii) Granting the modification request would not serve the public interest, convenience, and necessity.

(iii) Except as set forth in paragraph (d)(2)(iv) of this section, applications for modifications of GSO-like space station authorizations granted pursuant to the procedure set forth in § 25.158, which seek to relocate a GSO satellite or add a frequency band to the authorization, will be placed in a queue pursuant to § 25.158 and considered only after previously filed space station license applications or space station modification applications have been considered.

(iv) Applications for modifications of space station authorizations to increase the authorized bandwidth will not be considered in cases in which the original space station authorization was granted pursuant to the procedures set forth in § 25.157(e) or § 25.158(c)(4).

* * * * *

■ 9. Amend § 25.119 by adding paragraph (g) to read as follows:

§ 25.119 Assignment or transfer of control of station authorization.

* * * * *

(g) The Commission retains discretion in reviewing assignments and transfers of control of space station licenses to determine whether the initial license was obtained in good faith with the intent to construct a satellite system.

■ 10. Amend § 25.120 by revising paragraph (b) to read as follows:

§ 25.120 Application for special temporary authorization.

* * * * *

(b)(1) The Commission may grant a temporary authorization only upon a finding that there are extraordinary circumstances requiring temporary operations in the public interest and that delay in the institution of these temporary operations would seriously prejudice the public interest. Convenience to the applicant, such as marketing considerations or meeting scheduled customer in-service dates, will not be deemed sufficient for this purpose.

(2) The Commission may grant a temporary authorization for a period not to exceed 180 days, with additional periods not exceeding 180 days, if the Commission has placed the special temporary authority (STA) request on public notice.

(3) The Commission may grant a temporary authorization for a period not to exceed 60 days, if the STA request has not been placed on public notice, and the applicant plans to file a request for regular authority for the service.

(4) The Commission may grant a temporary authorization for a period not to exceed 30 days, if the STA request has not been placed on public notice, and an application for regular authority is not contemplated.

* * * * *

■ 11. Amend § 25.121 by revising paragraph (e) to read as follows:

§ 25.121 License term and renewals.

* * * * *

(e) *Renewal of licenses.* Applications for renewals of earth station licenses must be submitted on FCC Form 405 (Application for Renewal of Radio Station License in Specified Services) no earlier than 90 days, and no later than 30 days, before the expiration date of the license. Applications for space station system replacement authorization for non-geostationary orbit satellites shall be filed no earlier than 90 days, and no later than 30 days, prior to the end of the twelfth year of the existing license term.

■ 12. Amend § 25.137 by revising paragraphs (b), (c), and (d), and adding paragraphs (e), (f), and (g), to read as follows:

§ 25.137 Application requirements for earth stations operating with non-U.S. licensed space stations.

* * * * *

(b) Earth station applicants, or entities filing a ''letter of intent,'' or ''Petition for Declaratory Ruling,'' requesting authority to operate with a non-U.S. licensed space station must attach to

their FCC Form 312 an exhibit providing legal and technical information for the non-U.S. licensed space station in accordance with part 25. Applications addressed in this paragraph must be filed electronically through the International Bureau Filing System (IBFS).

(c) A non-U.S. licensed NGSO-like satellite system seeking to serve the United States can be considered contemporaneously with other U.S. NGSO-like satellite system pursuant to § 25.157 and considered before later-filed applications of other U.S. satellite system operators, and a non-U.S.-licensed GSO-like satellite system seeking to serve the United States can have its request placed in a queue pursuant to § 25.158 and considered before later-filed applications of other U.S. satellite system operators, if the non-U.S. licensed satellite system is:

(1) In orbit and operating;

(2) Has a license from another administration; or

(3) Has been submitted for coordination to the International Telecommunication Union.

(d) Earth station applicants requesting authority to operate with a non-U.S. licensed space station must demonstrate that the space station the applicant seeks to access has complied with all applicable Commission requirements for non-U.S. licensed systems to operate in the United States, including but not limited to the following:

(1) Milestones;

(2) Reporting requirements;

(3) Any other applicable service rules;

(4) Posting a bond of $7.5 million for NGSO-like satellite systems, or $5 million for GSO-like satellites, denominated in U.S. dollars, compliant with the terms of § 25.165;

(5) Non-U.S. licensed GSO-like space station operators with a total of five requests for access to the U.S. market in a particular frequency band, or a total of five previously granted requests for access to the U.S. market with unbuilt GSO-like space stations in a particular frequency band, or a combination of pending GSO-like requests and granted requests for unbuilt GSO-like space stations in a particular frequency band that equals five, will not be permitted to request access to the U.S. market with another GSO-like space station license in that frequency band. In addition, non-U.S.-licensed NGSO-like satellite system operators with one request on file with the Commission in a particular frequency band, or one granted request for an unbuilt NGSO-like satellite system in a particular frequency band, will not be permitted to request access to the U.S. market with another NGSO-like satellite system in that frequency band.

(e) A non-U.S.-licensed satellite operator that is seeking to serve the United States pursuant to a Letter of Intent may amend its request by submitting an additional Letter of Intent. Such additional Letters of Intent will be treated as amendments filed by U.S. space station applicants for purposes of determining the order in which the Letters of Intent will be considered relative to other pending applications.

(f) A non-U.S.-licensed satellite operator that has been permitted to serve the United States pursuant to a Letter of Intent or Petition for Declaratory Ruling, may modify its U.S. operations under the procedures set forth in § 25.117(d).

(g) A non-U.S.-licensed satellite operator that has been permitted to serve the United States pursuant to a Petition for Declaratory Ruling must notify the Commission if it plans to transfer control or assign its license to another party, so that the Commission can afford interested parties an opportunity to comment on whether the proposed transaction affects any of the considerations we made when we allowed the satellite operator to enter the U.S. market. If the transferee or assignee is not licensed by or seeking a license from a country that is a member of the World Trade Organization for services covered under the World Trade Organization Basic Telecommunications Agreement, the non-U.S.-licensed satellite operator will be required to make the showing described in paragraph (a) of this section.

■ 13. Amend § 25.140 by revising paragraph (b) and removing and reserving paragraphs (c) through (g) to read as follows:

§ 25.140 Qualifications of fixed-satellite space station licensees.

* * * * *

(b) Each applicant for a space station authorization in the fixed-satellite service must demonstrate, on the basis of the documentation contained in its application, that it is legally, technically, and otherwise qualified to proceed expeditiously with the construction, launch and/or operation of each proposed space station facility immediately upon grant of the requested authorization. Each applicant must provide the following information:

(1) The information specified in § 25.114; and

(2) An interference analysis to demonstrate the compatibility of its proposed system 2 degrees from any authorized space station. An applicant should provide details of its proposed r.f. carriers which it believes should be taken into account in this analysis. At a minimum, the applicant must include, for each type of r.f. carrier, the link noise budget, modulation parameters, and overall link performance analysis. (*See, e.g.*, appendices B and C to Licensing of Space Stations in the Domestic Fixed-Satellite Service (available at address in § 0.445)).

(c)–(g) [Reserved]

* * * * *

§ 25.141 [Amended]

■ 14. Amend § 25.141 by removing and reserving paragraph (b).

■ 15. Amend § 25.142 by revising paragraph (a)(1), and by removing and reserving paragraph (a)(4) to read as follows:

§ 25.142 Licensing provisions for the non-voice, non-geostationary mobile-satellite service.

(a) *Space station application requirements.* (1) Each application for a space station system authorization in the non-voice, non-geostationary mobile-satellite service shall describe in detail the proposed non-voice, non-geostationary mobile-satellite system, setting forth all pertinent technical and operational aspects of the system, and the technical and legal qualifications of the applicant. In particular, each application shall include the information specified in § 25.114. Applicants must also file information demonstrating compliance with all requirements of this section, and showing, based on existing system information publicly available at the Commission at the time of filing, that they will not cause unacceptable interference to any non-voice, non-geostationary mobile-satellite service system authorized to construct or operate.

* * * * *

(4) [Reserved]

* * * * *

§ 25.143 [Amended]

■ 16. Amend § 25.143 by removing and reserving paragraphs (b)(3) and (g).

■ 17. Amend § 25.144 by revising paragraph (b) to read as follows:

§ 25.144 Licensing provisions for the 2.3 GHz satellite digital audio radio service.

* * * * *

(b) Milestone requirements. Each applicant for system authorization in the satellite digital audio radio service must demonstrate within 10 days after a required implementation milestone as specified in the system authorization,

and on the basis of the documentation contained in its application, certify to the Commission by affidavit that the milestone has been met or notify the Commission by letter that it has not been met. At its discretion, the Commission may require the submission of additional information (supported by affidavit of a person or persons with knowledge thereof) to demonstrate that the milestone has been met. The satellite DARS milestones are as follows, based on the date of authorization:

* * * * *

§ 25.145 [Amended]

■ 18. Amend § 25.145 by removing and reserving paragraph (d).

§ 25.146 [Amended]

■ 19. Amend § 25.146 by removing and reserving paragraph (i).

■ 20. Revise § 25.155 to read as follows:

§ 25.155 Mutually exclusive applications.

(a) The Commission will consider applications to be mutually exclusive if their conflicts are such that the grant of one application would effectively preclude by reason of harmful electrical interference, or other practical reason, the grant of one or more other applications.

(b) An application for an NGSO-like space station license, within the meaning of § 25.157, will be entitled to comparative consideration with one or more conflicting applications only if:

(1) The application is mutually exclusive with another NGSO-like space station application; and

(2) The application is received by the Commission in a condition acceptable for filing by the ''cut-off'' date specified in a public notice.

(c) An application for a GSO-like space station license, within the meaning of § 25.158, will be entitled to comparative consideration with one or more conflicting applications only if:

(1) The application is mutually exclusive with another GSO-like space station application; and

(2) The application is received by the Commission in a condition acceptable for filing at the same millisecond as another GSO-like space station application with which it is mutually exclusive.

■ 21. Amend § 25.156 by adding paragraph (d) to read as follows:

§ 25.156 Consideration of applications.

* * * * *

(d)(1) Applications for NGSO-like satellite systems will be considered pursuant to the procedures set forth in § 25.157.

(2) Applications for GSO-like satellite systems will be considered pursuant to the procedures set forth in § 25.158.

(3) Applications for NGSO-like satellite and GSO-like systems employing two or more service bands will be treated like separate applications for each service band, and each service band request will be considered pursuant to § 25.157 or § 25.158, as appropriate.

(4) Applications for feeder link authority or intersatellite link authority will be treated like an application separate from its associated service band. Each feeder link request or intersatellite link request will be considered pursuant to the procedure for GSO-like service or NGSO-like service, as applicable.

(5) In cases where the Commission has not adopted frequency-band specific service rules, the Commission will not consider NGSO-like applications after it has granted a GSO-like application, and it will not consider GSO-like applications after it has granted an NGSO-like application, unless and until the Commission establishes NGSO/GSO sharing criteria for that frequency band. In the event that the Commission receives NGSO-like applications and GSO-like applications at the same time, and the Commission has not adopted sharing criteria in that band, the Commission will divide the spectrum between GSO-like and NGSO-like licensees based on the proportion of qualified GSO-like and NGSO-like applicants.

(6) An application for DBS or DARS services will be entitled to comparative consideration with one or more conflicting applications only if:

(i) The application is mutually exclusive with another application; and

(ii) The application is received by the Commission in a condition acceptable for filing by the ''cut-off'' date specified in a public notice.

■ 22. Add § 25.157 to read as follows:

§ 25.157 Consideration of NGSO-like satellite applications.

(a) This section specifies the Commission's procedures for considering license applications for ''NGSO-like satellite systems.'' For purposes of this section, the term ''NGSO-like satellite system'' is defined as:

(1) All NGSO satellite systems, and

(2) All GSO MSS satellite systems, in which the satellites are designed to communicate with earth stations with omni-directional antennas.

(b) Each NGSO-like satellite system application will be reviewed to determine whether it is acceptable for filing within the meaning of § 25.112. Any application that is not acceptable for filing would be returned to the applicant.

(c) Each NGSO-like satellite system application that is acceptable for filing will be reviewed to determine whether it is a ''competing application,'' *i.e.*, filed in response to a public notice initiating a processing round, or a ''lead application,'' *i.e.*, all other NGSO-like satellite system applications.

(1) Competing applications that are acceptable for filing will be placed on public notice to provide interested parties an opportunity to file pleadings in response to the application pursuant to § 25.154.

(2) Lead applications that are acceptable for filing will be placed on public notice. This public notice will initiate a processing round, establish a cut-off date for competing NGSO-like satellite system applications, and provide interested parties an opportunity to file pleadings in response to the application pursuant to § 25.154.

(d) After review of each of the applications in the processing round, and all the pleadings filed in response to each application, the Commission will grant all the applications that meet the standards of § 25.156(a), and deny the other applications.

(e)(1) In the event that there is insufficient spectrum in the frequency band available to accommodate all the qualified applicants in a processing round, the available spectrum will be divided equally among the licensees whose applications are granted pursuant to paragraph (d) of this section, except as set forth in paragraph (e)(2) or (e)(3) of this section.

(2) In cases where there are only one or two applications in a processing round granted pursuant to paragraph (d) of this section, each applicant will be assigned 1/3 of the available spectrum, and the remaining spectrum will be made available to other licensees in an additional processing round pursuant to paragraph (c) of this section.

(3) In cases where there are three or more applications in a processing round granted pursuant to paragraph (d) of this section, and one or more applicants apply for less spectrum than they would be warranted under paragraph (e)(1) of this section, those applicants will be assigned the bandwidth amount they requested in their applications. In those cases, the remaining qualified applicants will be assigned the lesser of the amount of spectrum they requested in their applications and the amount spectrum that they would be assigned if the available spectrum were divided

equally among the remaining qualified applicants.

(f)(1) Each licensee will be allowed to select the particular band segment it wishes to use no earlier than 60 days before they plan to launch the first satellite in its system, and no later than 30 days before that date, by submitting a letter to the Secretary of the Commission. The licensee shall serve copies of this letter to the other participants in the processing round pursuant to § 1.47 of this chapter.

(2) The licensee shall request contiguous bandwidth in both the uplink and downlink band. Each licensee's bandwidth selection in both the uplink and downlink band shall not preclude other licensees from selecting contiguous bandwidth.

(3) If two or more licensees in a processing round request the same band segment, all licensees other than the first one to request that particular band segment will be required to make another selection.

(g)(1) In the event that an applicants' license is cancelled for any reason, the Commission will redistribute the bandwidth allocated to that applicant equally among the remaining applicants whose licenses were granted concurrently with the cancelled license, unless the Commission determines that such a redistribution would not result in a sufficient number of licensees remaining to make reasonably efficient use of the frequency band.

(2) In the event that the redistribution of bandwidth set forth in paragraph (g)(1) of this section would not result in a sufficient number of licensees remaining to make reasonably efficient use of the frequency band, the Commission will issue a public notice initiating a processing round, as set forth in paragraph (c) of this section, to invite parties to apply for an NGSO-like satellite system license to operate in a portion of the bandwidth made available as a result of the cancellation of the initial applicant's license. Parties already holding licenses to operate an NGSO-like satellite system in that frequency band will not be permitted to participate in that processing round.

(3) There is a presumption that three satellite licensees in a frequency band are sufficient to make reasonably efficient use of the frequency band.

(h) Services offered pursuant to an NGSO-like license in a frequency band granted before the Commission has adopted frequency-band-specific service rules for that band will be subject to the default service rules in § 25.217.

■ 23. Add § 25.158 to read as follows:

§ 25.158 Consideration of GSO-like satellite applications.

(a) This section specifies the Commission's procedures for considering license applications for ''GSO-like satellite systems.'' For purposes of this section, the term ''GSO-like satellite system'' is defined as a GSO satellite designed to communicate with earth stations with directional antennas. Examples of GSO-like satellite systems are those which use earth stations with antennas with directivity towards the satellites, such as FSS, and MSS feeder links which use GSO satellites. GSO-like satellite systems are satellite systems that are not NGSO-like satellite systems within the meaning of § 25.157(a).

(b) Applications for GSO-like satellite system licenses will be placed in a queue and considered in the order that they are filed, pursuant to the following procedure:

(1) The application will be reviewed to determine whether it is acceptable for filing within the meaning of § 25.112. If not, the application will be returned to the applicant.

(2) If the application is acceptable for filing, the application will be placed on public notice pursuant to § 25.151, and interested parties will be given an opportunity to file pleadings pursuant to § 25.154.

(3) The application will be granted only if it meets each of the following criteria:

(i) After review of the application and any pleadings filed in response to that application, the Commission finds that the application meets the standards of § 25.156(a); and

(ii) The proposed satellite will not cause harmful interference to any previously licensed operations.

(c) An applicant for a GSO-like satellite system license is not allowed to transfer, assign, or otherwise permit any other entity to assume its place in any queue.

(d) In the event that two or more GSO-like satellite system license applications are mutually exclusive within the meaning of § 25.155(c), the Commission will consider those applications pursuant to the following procedure:

(1) Each application will be reviewed to determine whether it is acceptable for filing within the meaning of § 25.112. Any application not found acceptable for filing will be returned to the applicant.

(2) All applications that are acceptable for filing will be placed on public notice pursuant to § 25.151, and interested parties will be given an opportunity to file pleadings pursuant to § 25.154.

(3) Each application will be granted if it meets the criteria of paragraph (b)(3) of this section, and otherwise will be denied.

(4) In the event that two or more applications are granted pursuant to paragraph (d)(3) of this section, the available bandwidth at the orbital location or locations in question will be divided equally among those licensees.

(5) Licensees whose licenses are granted pursuant to paragraph (d)(4) of this section will be allowed to select the particular band segment it wishes to use no earlier than 60 days before they plan to launch the first satellite in its system, and no later than 30 days before that date, by submitting a letter to the Secretary of the Commission. The licensee shall serve copies of this letter to the other participants in the processing round pursuant to § 1.47 of this chapter.

(6) Licensees whose licenses are granted pursuant to paragraph (d)(4) of this section shall request contiguous bandwidth in both the uplink and downlink band. Each licensee's bandwidth selection shall not preclude other licensees from selecting contiguous bandwidth.

(7) If two or more licensees whose licenses are granted pursuant to paragraph (d)(4) of this section request the same band segment, all licensees other than the first one to request that particular band segment will be required to make another selection.

(e) Services offered pursuant to a GSO-like license in a frequency band granted before the Commission has adopted frequency-band-specific service rules for that band will be subject to the default service rules in § 25.217.

■ 24. Add § 25.159 to read as follows:

§ 25.159 Limits on pending applications and unbuilt satellite systems.

(a) Applicants with a total of five applications for GSO-like space station licenses on file with the Commission in a particular frequency band, or a total of five licensed-but-unbuilt GSO-like space stations in a particular frequency band, or a combination of pending GSO-like applications and licensed-but-unbuilt GSO-like space stations in a particular frequency band that equals five, will not be permitted to apply for another GSO-like space station license in that frequency band.

(b) Applicants with an application for one NGSO-like satellite system license on file with the Commission in a particular frequency band, or one licensed-but-unbuilt NGSO-like satellite system in a particular frequency band, will not be permitted to apply for

another NGSO-like satellite system license in that frequency band.

(c) If an applicant has an attributable interest in one or more other entities seeking one or more space station licenses, the pending applications and licensed-but-unbuilt satellite systems filed by those other entities will be counted as filed by the applicant for purposes of the limits on the number of pending space station applications and licensed-but-unbuilt satellite systems in this paragraph. For purposes of this paragraph, an applicant has an ''attributable interest'' in another entity if:

(1) It holds equity (including all stockholdings, whether voting or nonvoting, common or preferred) and debt interest or interests, in the aggregate, exceed thirty-three (33) percent of the total asset value (defined as the aggregate of all equity plus all debt) of that entity, or

(2) It holds a controlling interest in that entity, or is the subsidiary of a party holding a controlling interest in that entity, within the meaning of 47 CFR 1.2110(b)(2).

(3) For purposes of paragraphs (c)(1) and (c)(2) of this section, ownership interests shall be calculated on a fully diluted basis, *i.e.*, all agreements, such as warrants, stock options, and convertible debentures, will generally be treated as if the rights thereunder already have been fully exercised.

(d) In the event that a licensee misses three or more milestones within any three-year period, the Commission will presume that the licensee obtained one or more of those licenses for speculative purposes. Unless the licensee rebuts this presumption, it will not be permitted to apply for a GSO-like satellite or an NGSO-like satellite system in any frequency band if it has two or more satellite applications pending, or two licensed-but-unbuilt satellite systems of any kind. This limit will remain in effect until the licensee provides adequate information to demonstrate that it is very likely to construct its licensed facilities if it were allowed to file more applications.

(e) For purposes of this section, ''frequency band'' means one of the paired frequency bands available for satellite service listed in § 25.202.

■ 25. Amend § 25.161 by revising paragraph (a) to read as follows:

§ 25.161 Automatic termination of station authorization.

* * * * *

(a)(1) Failure to meet any applicable milestone for implementation of the licensed satellite system specified in §§ 25.164(a) and/or (b), without demonstrating that the failure was caused by circumstances beyond the licensee's control, or

(2) If there are no applicable milestones for implementation of the licensed satellite system specified in §§ 25.164(a) and/or (b), the expiration of the required date of completion of construction or other required action specified in the authorization, or after any additional time authorized by the Commission, if a certification of completion of the required action has not been filed with the Commission unless a request for an extension of time has been filed with the Commission but has not been acted on.

* * * * *

■ 26. Add § 25.164 to subpart B to read as follows:

§ 25.164 Milestones.

(a) Licensees of geostationary orbit satellite systems other than DBS and DARS satellite systems, including GSO MSS satellite systems, licensed on or after August 27, 2003 will be required to comply with the schedule set forth in paragraphs (a)(1) through (a)(4) of this section in implementing their satellite systems, unless a different schedule is established by Title 47, Chapter I, or by Commission Order, or by Order adopted pursuant to delegated authority. These dates are to be measured from the date the license is issued.

(1) *One year:* Enter into a binding non-contingent contract to construct the licensed satellite system.

(2) *Two years:* Complete the critical design review of the licensed satellite system.

(3) *Three years:* Begin the construction of the satellite.

(4) *Five years:* Launch and operate the satellite.

(b) Licensees of non-geostationary orbit satellite systems other than DBS and DARS satellite systems licensed on or after September 11, 2003, will be required to comply with the schedule set forth in paragraphs (b)(1) through (b)(5) of this section in implementing their satellite systems, unless a different schedule is established by Title 47, Chapter I, or by Commission Order, or by Order adopted pursuant to delegated authority. These dates are to be measured from the date the license is issued.

(1) *One year:* Enter into a binding non-contingent contract to construct the licensed satellite system.

(2) *Two years:* Complete the critical design review of the licensed satellite system.

(3) *Two years, six months:* Begin the construction of the first satellite in the licensed satellite system.

(4) *Three years, six months:* Launch and operate the first satellite in the licensed satellite system.

(5) *Six years:* Bring all the satellites in the licensed satellite system into operation.

(c) Licensees of all satellite systems, other than DBS and DARS satellite systems, licensed on or after September 11, 2003, will be required to submit a copy of their binding non-contingent contract with the Commission on or before the date scheduled for entering into such a contract.

(d) Licensees of all satellite systems, other than DBS and DARS satellite systems, licensed on or after September 11, 2003, will be required to submit information to the Commission sufficient to demonstrate that the licensee has completed the critical design review of the licensed satellite system on or before the date scheduled for entering into such completion.

(e) Licensees of all satellite systems, other than DBS and DARS satellite systems, licensed on or after September 11, 2003, will be required to submit information to the Commission sufficient to demonstrate that the licensee has commenced physical construction of its licensed spacecraft on or before the date scheduled for such commencement.

(f) In cases where the Commission grants a satellite authorization in different stages, such as a license for a satellite system using feeder links or intersatellite links, the earliest of the milestone schedules shall be applied to the entire satellite system.

■ 27. Add § 25.165 to subpart B to read as follows:

§ 25.165 Posting of bonds.

(a) For all satellite licenses other than DBS and DARS licenses issued after September 11, 2003, the licensee is required to post a bond within 30 days of the grant of its license. Failure to post the required bond will render the license null and void automatically.

(1) NGSO-like licensees are required to post a bond in the amount of $7.5 million.

(2) GSO-like licensees are required to post a bond in the amount of $5 million.

(b) The licensee must use a surety company deemed acceptable within the meaning of 31 U.S.C. 9304 *et seq.* (*See, e.g.*, Department of Treasury Fiscal Service, Companies Holding Certificates of Authority as Acceptable Sureties on Federal Bonds and As Acceptable Reinsurance Companies, 57 FR 29356, July 1, 1992.) The bond must name the U.S. Treasury as beneficiary in the event of the licensee's default. The licensee must provide the Commission with a

copy of the performance bond, including all details and conditions.

(c) A licensee will be considered to be in default if it fails to meet any milestone deadline set forth in § 25.164, and, at the time of milestone deadline, the licensee has not provided a sufficient basis for extending the milestone.

(d) An NGSO-like licensee will be permitted to reduce the amount of the bond by 20 percent of the original bond amount upon successfully meeting a milestone deadline set forth in § 25.164(b). A GSO-like licensee will be permitted to reduce the amount of the bond by 25 percent of the original bond amount upon successfully meeting a milestone deadline set forth in § 25.164(a).

■ 28. Amend § 25.210 by removing and reserving paragraphs (e) and (g), and revising paragraph (f) to read as follows:

§ 25.210 Technical requirements for space stations in the Fixed-Satellite Service.

* * * * *

(e) [Reserved]

(f) All space stations in the Fixed Satellite Service in the 3600–3700 MHz, 3700–4200 MHz, 5091–5250 MHz, 5825–5925 MHz, 5925–6425 MHz, 6425–6525 MHz, 6525–6700 MHz, 6700–7025 MHz, 10.7–10.95 GHz, 10.95–11.2 GHz, 11.2–11.45 GHz, 11.45–11.7 GHz, 11.7–12.2 GHz, 12.2–12.7 GHz, 12.75–13.15 GHz, 13.15–13.2125 GHz, 13.2125–13.25 GHz, 13.75–14.0 GHz, 14.0–14.5 GHz and 15.43–15.63 GHz bands shall employ state-of-the-art full frequency reuse either through the use of orthogonal polarizations within the same beam and/or the use of spatially independent beams.

(g) [Reserved]

* * * * *

■ 29. Add § 25.217 to subpart C to read as follows:

§ 25.217 Default service rules.

(a) The technical rules in this section apply only to licenses to operate a satellite system in a frequency band granted after a domestic frequency allocation has been adopted for that frequency band, but before any frequency-band-specific service rules have been adopted for that frequency band.

(b)(1) For all NGSO-like satellite licenses for which the application was filed pursuant to the procedures set forth in § 25.157 after August 27, 2003, authorizing operations in a frequency band for which the Commission has not adopted frequency band-specific service rules at the time the license is granted, the licensee will be required to comply with the following technical requirements, notwithstanding the frequency bands specified in these rule provisions: §§ 25.142(d), 25.143(b)(2)(ii), 25.143(b)(2)(iii), 25.204(g), 25.210(c), 25.210(d), 25.210(f), 25.210(i), 25.210(k), and 25.210(l).

(2) In addition to the requirements set forth in paragraph (b)(1) of this section, the Commission will coordinate with the National Telecommunications and Information Administration (NTIA) regarding the operations of any licensees authorized to operate in a shared government/non-government frequency band, pursuant to the procedure set forth in § 25.142(b)(2)(ii).

(3) Earth station licensees authorized to operate with one or more space stations described in paragraph (b)(1) of this section shall comply with the requirements in § 25.136. In addition, earth station licensees authorized to operate with one or more space stations described in paragraph (b)(1) of this section in frequency bands shared with terrestrial wireless services shall comply with the requirements in § 25.203(c).

(c)(1) For all GSO-like satellite licenses for which the application was filed pursuant to the procedures set forth in § 25.158 after August 27, 2003, authorizing operations in a frequency band for which the Commission has not adopted frequency band-specific service rules at the time the license is granted, the licensee will be required to comply with the following technical requirements, notwithstanding the frequency bands specified in these rule provisions: §§ 25.142(d), 25.143(b)(2)(iv), 25.204(g), 25.210(c), 25.210(d), 25.210(f), 25.210(i), 25.210(j), 25.210(k), and 25.210(l).

(2) In addition to the requirements set forth in paragraph (c)(1) of this section, the Commission will coordinate with the National Telecommunications and Information Administration (NTIA) regarding the operations of any licensees authorized to operate in a shared government/non-government frequency band, pursuant to the procedure set forth in § 25.142(b)(2)(ii).

(3) Earth station licensees authorized to operate with one or more space stations described in paragraph (c)(1) of this section shall comply with the earth station antenna performance verification requirements in § 25.132, and the antenna gain pattern requirements in §§ 25.209(a) and (b). In addition, earth station licensees authorized to operate with one or more space stations described in paragraph (c)(1) of this paragraph in frequency bands shared with terrestrial wireless services shall comply with the requirements in § 25.203(c).

(4) In addition to the requirements set forth in paragraph (c)(3) of this section, earth station licensees with a gain equivalent or higher than the gain of a 1.2 meter antenna operating in the 14.0–14.5 GHz band, authorized to operate with one or more space stations described in paragraph (c)(1) of this paragraph in frequency bands greater than 14.5 GHz shall be required to comply with the antenna input power density requirements set forth in § 25.212(c).

(d) Applicants requesting authorization of a satellite subject to paragraphs (b) or (c) of this section must submit a narrative statement describing the debris mitigation design and operational strategies, if any, that they will use. Applicants are specifically required to submit a casualty risk assessment if planned post-mission disposal involves atmospheric re-entry of the spacecraft.

(e) In the event that the Commission adopts frequency band-specific service rules for a particular frequency band after it has granted one or more space station or earth station licenses for operations in that frequency band, those licensees will be required to come into compliance with the frequency band-specific service rules within 30 days of the effective date of those rules, unless otherwise specified by either Commission or Bureau Order.

[FR Doc. 03–21649 Filed 8–26–03; 8:45 am]

BILLING CODE 6712–01–P

DEPARTMENT OF COMMERCE

National Oceanic and Atmospheric Administration

50 CFR Part 223

[Docket No.030725185–3207–02; I.D. 071403B]

RIN 0648–AR34

Endangered and Threatened Wildlife; Sea Turtle Conservation Requirements

AGENCY: National Marine Fisheries Service (NMFS), National Oceanic and Atmospheric Administration (NOAA), Commerce.

ACTION: Final rule.

SUMMARY: NMFS is amending the turtle excluder device (TED) regulations that require most shrimp trawlers to use Turtle Excluder Devices (TEDs) in the southeastern Atlantic and the Gulf of Mexico, to reduce the incidental capture of endangered and threatened sea turtles during shrimp trawling. Specifically, NMFS is allowing the use of a design of

a hooped hard TED (''the Coulon TED'') that is capable of releasing large loggerhead and green turtles as well as leatherback turtles.

DATES: This final rule is effective August 21, 2003.

ADDRESSES: Copies of the environmental assessment can be obtained from the Protected Resources Division, Southeast Regional Office, 9721 Executive Center Drive, North, Suite 102 St. Petersburg, Florida, 33702.

FOR FURTHER INFORMATION CONTACT: Robert Hoffman (ph. 727–570–5312, fax 727–570–5517, e-mail *Robert.Hoffman@noaa.gov*), or Barbara A. Schroeder (ph. 301–713–1401, fax 301–713–0376, e-mail *Barbara.Schroeder@noaa.gov*).

SUPPLEMENTARY INFORMATION:

Background

All sea turtles that occur in U.S. waters are listed as either endangered or threatened under the Endangered Species Act of 1973 (ESA). The Kemp's ridley (*Lepidochelys kempii*), leatherback (*Dermochelys coriacea*), and hawksbill (*Eretmochelys imbricata*) turtles are listed as endangered. The loggerhead (*Caretta caretta*) and green (*Chelonia mydas*) turtles are listed as threatened, except for breeding populations of green turtles in Florida and on the Pacific coast of Mexico, which are listed as endangered.

Sea turtles are incidentally taken and killed as a result of numerous activities, including fishery trawling activities in the Gulf of Mexico and along the Atlantic seaboard. Under the ESA and its implementing regulations, taking sea turtles is prohibited, with exceptions identified in 50 CFR 223.206, or if in accordance with the terms and conditions of a biological opinion issued under section 7 of the ESA or an incidental take permit issued under section 10 of the Act. The incidental taking of turtles during shrimp or summer flounder trawling is exempted from the taking prohibition of section 9 of the ESA if the conservation measures specified in the sea turtle conservation regulations (50 CFR 223) are followed. The regulations require most shrimp trawlers and summer flounder trawlers operating in the southeastern United States (Atlantic Area, Gulf Area, and summer flounder sea turtle protection area, see 50 CFR 223.206) to have a NMFS-approved TED installed in each net that is rigged for fishing to provide for the escape of sea turtles. TEDs currently approved by NMFS include single-grid hard TEDs and hooped hard TEDs conforming to a generic description, the flounder TED, and one type of soft TED the Parker soft TED (see 50 CFR 223.207).

TEDs incorporate an escape opening, usually covered by a webbing flap, that allows sea turtles to escape from trawl nets. To be approved by NMFS, a TED design must be shown to be 97 percent effective in excluding sea turtles during testing based upon specific testing protocols (50 CFR 223.207(e)(1)). Most approved hard TEDs are described in the regulations (50 CFR 223.207 (a)) according to generic criteria based upon certain parameters of TED design, configuration, and installation, including height and width dimensions of the TED opening through which the turtles escape.

February 21, 2003, Amendments to the Sea Turtle Conservation Regulations

On February 21, 2003, NMFS issued a final rule (68 FR 8456), amending the sea turtle conservation regulations to protect large loggerhead, green, and leatherback sea turtles. The final rule became effective April 15, 2003, with the exception of the Gulf Area where it will become effective on August 21, 2003. The February final rule requires that all shrimp trawlers fishing in the offshore waters of the southeastern United States (Atlantic Area and Gulf Area) and the inshore waters of Georgia and South Carolina use either a double cover flap TED, a single-grid hard TED with a 71–inch (180–cm) opening, or a Parker soft TED with a 96–inch (244–cm) opening in each net rigged for fishing. In inshore waters, except those of Georgia and South Carolina, the rule allows the use of a single-grid hard TED with a 44–inch (112–cm) opening, a Parker soft TED with a 56–inch (142–cm) opening, and a hooped hard TED with a 35–inch (89–cm) by 27–inch (69–cm) escape opening.

Since publication of the final rule (68 FR 8456, February 21, 2003), NMFS has tested a new hooped hard TED design developed in Louisiana (the Coulon TED) that contains a larger escape opening than the hooped hard TED design used in inshore waters. Louisiana fishermen prefer the Coulon TED due to its higher shrimp retention, and its efficiency and quickness in releasing both turtles and fish bycatch. Because of the desire of fishermen to continue to use this style of TED in offshore waters and their assertion that it could indeed be made large enough to release leatherback turtles, the Southeast Fisheries Science Center's Harvesting Systems and Engineering Branch worked with the inventor of the Coulon TED and fishermen who use it to develop and test a large Coulon style TED to evaluate its ability to release large loggerhead, green, and leatherback turtles.

Large Hooped Hard TED Testing

NMFS tested the large Coulon style TED using testing protocols designed to evaluate a TED's ability to release large turtles. The protocols were developed during the testing and approval of the double cover TED (66 FR 24287, May 14, 2001). NMFS used the average carapace measurements of 15 nesting female leatherback turtles to construct a pipe-framed model of a leatherback turtle. This model measured 40 inches wide by 21 inches (102 cm by 53 cm) deep. The test was performed by a diver swimming repeatedly through the trawl with the model and pushing it through the TED opening. During these tests, the diver was able to push the model through the opening with ease. When the model was inverted (simulating the dorsal surface of the turtle oriented against the TED frame), the diver was still able to push the model through the opening with ease.

A large Coulon style TED with a hinged door covering the escape opening to within 12 inches (30 cm) from the back edge of the opening was also tested to determine its ability to release small turtles. The small turtle protocol calls for the release of 25 turtles, released one at a time, into a trawl towed at 2.5 knots (55 FR 41092, October 9, 1990). Each turtle is given 5 minutes to escape; if the turtle does not escape within 5 minutes, it is retrieved by divers and is considered to have been captured. The capture rate is then compared to that of a control TED (in this case a top-opening double cover flap TED).

During the week of June 22, 2003, 25 small turtles were exposed to the large Coulon style TED with a hinged door and all 25 turtles escaped quickly and easily. The Southeast Fisheries Science Center's Harvesting Systems and Engineering Branch believes that this particular configuration of the large Coulon style TED would be the most difficult for small turtles to escape from because of the weight and size of the door. However, when compared to the control TED, the average escape times did not differ significantly; the average escape time for the control TED was 62 seconds compared to 68 seconds for the Coulon style TED with the hinged door. Based upon the tests described above, NMFS determined that the large Coulon style TED meets the regulatory turtle release rate requirement.

Therefore, on July 30, 2003, NMFS published a proposed rule (68 FR 44722) requesting comments on allowing the use of a large hooped hard

TED in the offshore waters of the Atlantic and Gulf of Mexico. NMFS received two comments on the proposed rule.

Pubic Comments

Comment 1: The University of Georgia Marine Extension Service is concerned that the codified text specifying construction materials for TEDs in the proposed rule requires that if steel rod is used to construct a single grid hard TED or an inshore hooped hard TED the steel rod used must have an outside diameter of 1/2 inch (1.27 cm). This is a significant change from the required 1/4 inch (.64 cm) currently required.

Response: NMFS thanks the commenter for bringing this to our attention. This is a typographical error in the proposed rule and has been corrected in this final rule.

Comment 2: An environmental organization stated that although they do not oppose NMFS allowing the use of the Coulon TED, they asserted that any certified TED must continue to be reviewed, monitored and enforced to ensure that it is effectively releasing sea turtles. The commenter stated that NMFS must increase the monitoring and enforcement of the TED regulations to ensure that these devices are performing as specified.

Response: NMFS agrees that any TED certified for use in the shrimp fishery should be monitored to ensure proper performance. NMFS Southeast Fisheries Science Center's Harvesting Systems and Engineering Branch works closely with the industry, net manufacturers, observer program, and enforcement to ensure that any problems encountered with the performance of TEDs during fishing conditions is addressed through further gear development and testing. NMFS enforcement will continue to enforce and monitor the TED requirements, including the Coulon TED. However given the anticipated limited use of the Coulon TED, NMFS does not intend to commit extra resources towards monitoring this device.

Provisions of the Final Rule

NMFS is issuing a rule allowing the use of an offshore hooped hard TED that has to meet certain minimum construction standards, in addition to the construction standards specified for hard TEDs generally. The frame for this TED must be made of aluminum rod with a minimum outside diameter of 5/8 inch (1.59 cm) or aluminum tubing with a minimum outside diameter of 1 inch (2.54 cm) and a minimum wall thickness of 1/8 inch (0.32 cm). The escape opening must have a horizontal measurement of no less than 40 inches (102 cm) wide and a forward measurement of no less than 35 inches (89 cm). The front hoop on an offshore hooped hard TED must have an inside horizontal measurement of at least 40 inches (102 cm) and an inside vertical measurement of at least 30 inches (76 cm). The minimum clearance between the deflector bars and the forward edge of the escape opening must be at least 23 1/4 inches (59 cm). The measurement between support bars must be no less than 40 inches (102 cm) (see Figure 1 for illustrations of the offshore hooped hard TED and its dimensions)

BILLING CODE 3510–22–S

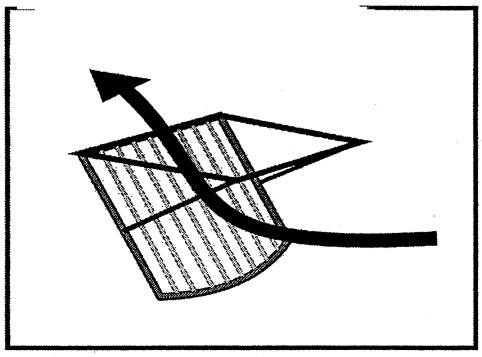

Fig. 1.A. Turtle escape path through offshore hooped hard TED.

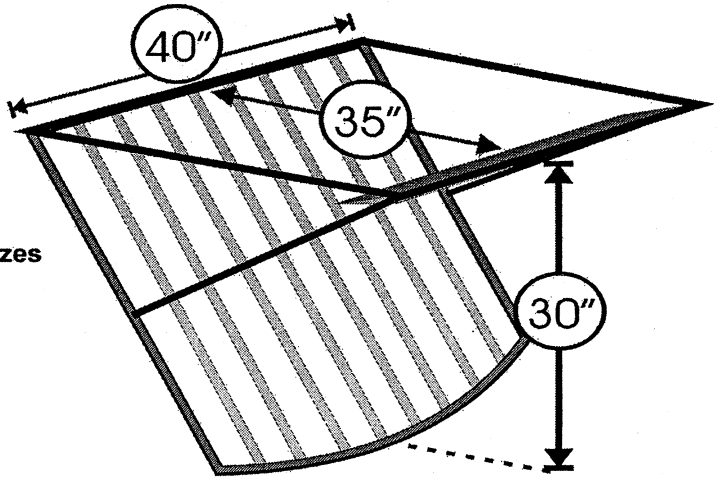

Fig. 1.B. Minimum opening sizes for offshore hooped hard TED.

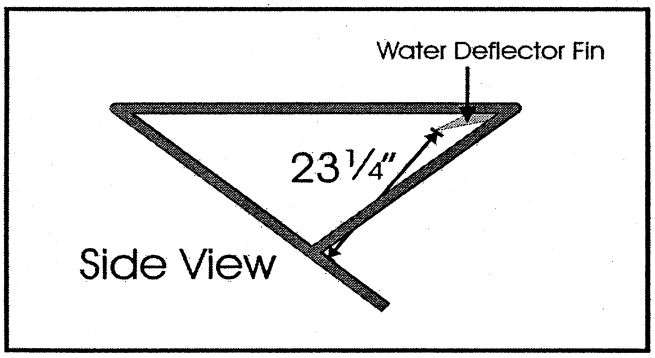

Fig. 1.C. Minimum grid clearance for offshore hooped hard TED, shown with optional water deflector fin.

Figure 1. Illustration of offshore hooped hard TED dimensions, showing optional water deflector fin.

BILLING CODE 3510–22–C

This final rule will also allow three modifications for hooped hard TEDs. The first is the use of a water deflector fin used to increase shrimp retention. The original Coulon TED design incorporates such a water deflector fin. This fin can be welded onto the forward edge of the escape opening, projecting aft into the TED with an angle of 5 to 45–degrees from the normal, horizontal plane of the trawl. The fin must be constructed of a flat aluminum bar, up to 3/8 inch (0.95 cm) thick and up to 4 inches (10.2 cm) deep. The fin may be as wide as the width of the escape opening, minus 1 inch (2.5 cm).

The second allowable modification is the use of a webbing flap. The resultant escape opening for the offshore hooped hard TED with a webbing flap must have a stretched mesh circumference of no less than 142 inches (361 cm). The end of the flap cannot extend more than 24 inches (61 cm) past the posterior edge of the frame. This is the same webbing flap allowed for use with single-grid hard TEDs with the 71–inch (180 cm) offshore opening (see 50 CFR 223.207(d)(3)(iii)).

The third allowable modification for hooped hard TEDs is the use of a hinged door frame to partially cover the escape opening. The door frame must be at least as wide as the escape opening, may be up to a maximum of 24 inches (61 cm) long, may be covered with taut mesh webbing (the size of the mesh cannot be greater than that used for the TED extension webbing), and must be connected to the forward edge of the escape opening by a hinge device that will allow the door to open upwards freely. The posterior edge of the door frame, in the closed position, must lie at least 12 inches (30 cm) forward of the posterior edge of the escape opening. If a water deflector fin is used with a hinged door it must be welded to the posterior edge of the door frame, projecting aft into the TED with an angle of 5–45 degrees from the normal, horizontal plane of the trawl. The fin must be constructed of a flat aluminum bar, up to 3/8 inch (0.95 cm) thick and up to four inches (10.2 cm) deep. The fin may be as wide as the width of the escape opening, minus one inch (2.5 cm). The deflector fin must be no less than 12 inches (30 cm) forward of the posterior edge of the escape opening, when the door is in the closed position. Two stopper ropes or a hinge limiter may be used to limit the maximum opening height of the hinged door frame, as long as the minimum clearance between any part of the deflector bars and any part of the door, including a water deflector fin if installed, in its fully open position is at least 23 1/4 inches (59 cm) for an offshore hooped hard TED or at least 20 inches (51 cm) for an inshore hooped hard TED. The purpose of the stopper ropes or hinge limiters is to prevent the door frame from opening excessively during net deployment and haulback, possibly resulting in loss of catch or damage to the door. Any stopper ropes or hinge limiters must not restrict the free operation of the door, up to its maximum opening (i.e. the door must be able to easily swing to the required opening height before the stops or limiters affect its movement). The hinged door cannot be used in combination with a webbing flap or with a water deflector fin attached to the forward edge of the escape opening (See Figure 2 for illustration of the optional hinged door frame, shown with water deflector fin).

BILLING CODE 3510–22–S

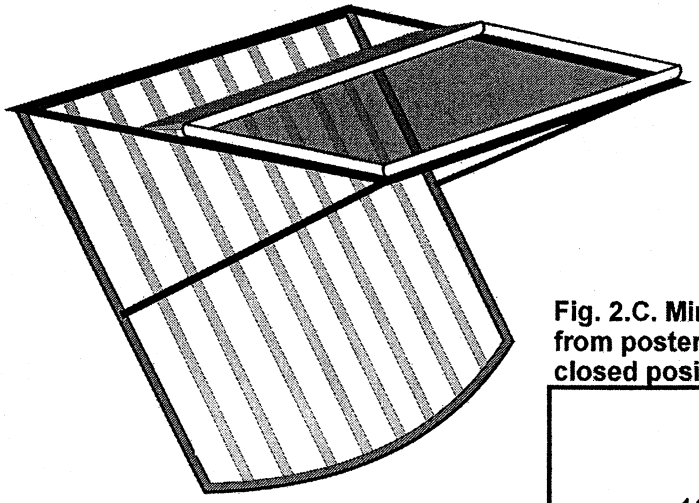

Fig. 2.A.
A perspective view of hooped hard TED with optional hinged door frame.

Fig. 2.C. Minimum clearance of door frame from posterior edge of escape opening in closed position.

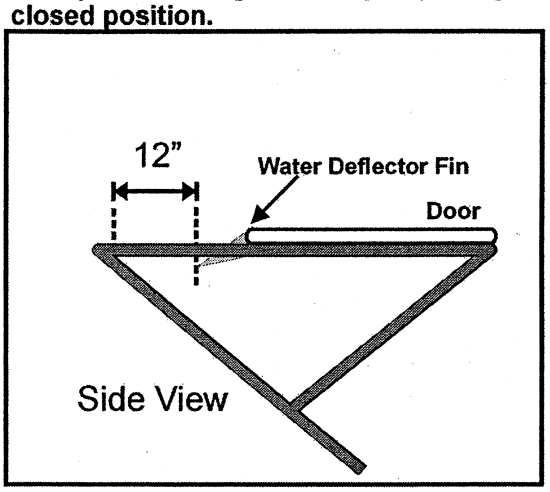

Fig. 2.B. Side perspective view

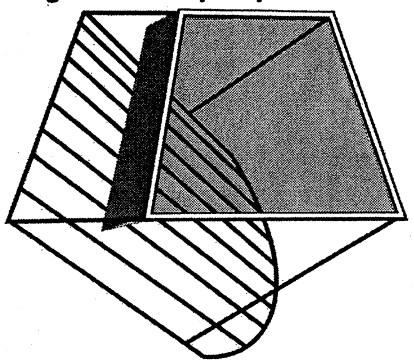

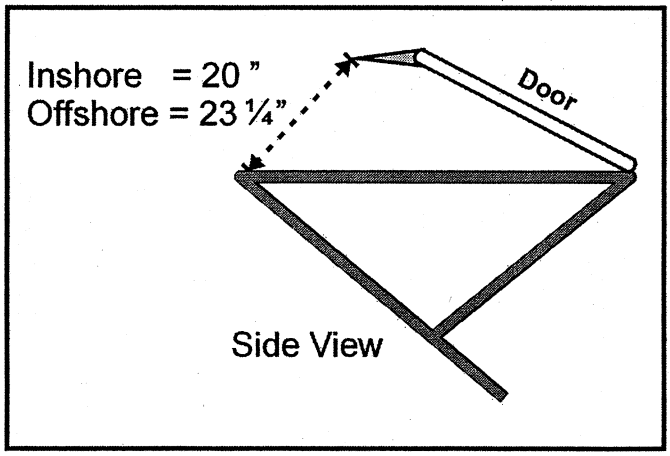

Fig. 2.D. Minimum clearance of door frame from deflector bars; door in fully open position.

Figure 2. Hooped hard TED with optional hinged door frame and water deflector fin.

BILLING CODE 3510–22–C

Classification

This final rule has been determined to be not significant for purposes of Executive Order 12866.

NMFS prepared an environmental assessment (EA) for this final rule that evaluates the potential impact on the environment that may result from the final rule. The EA found that the implementation of this final rule will not have a significant impact on the quality of the human environment and that the preparation of an environmental impact statement is not necessary. A copy of the EA is available from NMFS (see **ADDRESSES**).

Under the existing TED regulations published on February 21, 2003, offshore fishermen can choose to use a single grid hard TED with either a 71–inch (180–cm) opening or a double cover flap, or they can use a Parker soft TED with a leatherback opening. Until this final rule becomes effective, hooped hard TED use would not be legal in offshore waters. Accordingly, if the effectiveness of this rule is delayed, it would burden fishermen whocurrently use hooped hard TEDS in offshore waters and plan to continue using them by forcing them either to abstain from fishing until the rule becomes effective, or else purchase an additional TED of one of the varieties described above. If the rule becomes effective immediately, then there will be no need for such substantial duplicative expenditures in order to fish during that period. Therefore, because this rule relieves a restriction, the Assistant Administrator for Fisheries, NOAA, finds good cause under the Administrative Procedure Act pursuant to 5 U.S.C. 553(d)(1) to waive the 30 day delay in effectiveness for this final rule.

The Endangered Species Act provides the statutory basis for this final rule.

The Chief Counsel for Regulation of the Department of Commerce certified to the Chief Counsel for Advocacy of the Small Business Administration that this final rule, if adopted, would not have a significant economic impact on a substantial number of small entities. This final rule, if adopted, will not have a significant economic impact on a substantial number of small entities because the provisions of the final rule would not require any action or purchase on the part of fishermen, but rather would allow fishermen the option of a hooped hard TED design to comply with the TED requirement. Hooped hard TEDs are already in use by some fishermen who prefer this TED style due to its efficiency in releasing both turtles and fish bycatch, while retaining shrimp. Therefore, a regulatory flexibility analysis was not prepared.

List of Subjects in 50 CFR Part 223

Endangered and threatened species, Exports, Imports, Marine mammals, Transportation.

Dated: August 21, 2003.

Rebecca Lent,

Deputy Assistant Administrator for Regulatory Programs, National Marine Fisheries Service.

■ For the reasons set out in the preamble, 50 CFR part 223 will be amended as follows:

PART 223—THREATENED MARINE AND ANADROMOUS SPECIES

■ 1. The authority citation for part 223 continues to read as follows:

Authority: 16 U.S.C. 1531 *et seq.*

■ 2. In § 223.207, paragraphs (a)introductory text, (a)(1), (a)(7)(i), and (a)(8)(i) are revised and paragraphs (d)(6) and (d)(7) are added to read as follows:

§ 223.207 Approved TEDs.

(a) *Hard TEDs.* Hard TEDs are TEDs with rigid deflector grids and are categorized as ''hooped hard TEDs'' and ''single-grid hard TEDs'' such as the Matagorda and Georgia TED (Figures 3 & 4 to this part). Hard TEDs complying with the following generic design criteria are approved TEDs:

(1) *Construction materials*—(i) *Single-grid and inshore hooped hard TED.* A single-grid hard TED or an inshore hooped hard TED must be constructed of one or a combination of the following materials, with minimum dimensions as follows:

(A) Solid steel rod with a minimum outside diameter of 1/4 inch (0.64 cm);

(B) Fiberglass or aluminum rod with a minimum outside diameter of 1/2 inch (1.27 cm); or

(C) Steel or aluminum tubing with a minimum outside diameter of 1/2 inch (1.27 cm) and a minimum wall thickness of 1/8 inch (0.32 cm) (also known as schedule 40 tubing).

(ii) *Offshore hooped hard TED.* An offshore hooped hard TED must be constructed of aluminum, with minimum dimensions as follows:

(A) Solid rod with a minimum outside diameter of 5/8 inch (1.59 cm); or

(B) Tubing with a minimum outside diameter of 1 inch (2.54 cm) and a minimum wall thickness of 1/8 inch (0.32 cm).

* * * * *

(7) * * *

(i) *Hooped hard TEDs.* * * *

(A) *Escape opening for inshore hooped hard TED.* The inshore hooped hard TED escape opening must have a horizontal measurement of no less than 35 inches (89 cm) wide and a forward measurement of no less than 27 inches (69 cm). A hinged door frame may be used to partially cover the escape opening as provided in paragraph (d)(7) of this section. Alternatively, a webbing flap may be used as provided in paragraph (d)(3)(i) of this section. The resultant opening with a webbing flap must be a minimum width of 35 inches (89 cm) and a minimum height of 20 inches (51 cm), with each measurement taken simultaneously. This opening may only be used in inshore waters, except it may not be used in the inshore waters of Georgia and South Carolina.

(B) \ The offshore hooped hard TED escape opening must have a horizontal measurement of no less than 40 inches (102 cm) wide and a forward measurement of no less than 35 inches (89 cm). A hinged door frame may be used to partially cover the escape opening as provided in paragraph (d)(7) of this section. Alternatively, a webbing flap may be used as provided in paragraph (d)(3)(ii) of this section. The resultant escape opening with a webbing flap must have a stretched mesh circumference of no less than 142 inches (361 cm).

* * * * *

(8) * * *

(i) *Hooped hard TEDs.*

(A) *Inshore hooped hard TED.* The front hoop on an inshore hooped hard TED must have an inside horizontal measurement of at least 35 inches (89 cm) and an inside vertical measurement of at least 30 inches (76 cm). The minimum clearance between the deflector bars and the forward edge of the escape opening must be at least 20 inches (51 cm).

(B) *Offshore hooped hard TED.* The front hoop on an offshore hooped hard TED must have an inside horizontal measurement of at least 40 inches (102 cm) and an inside vertical measurement of at least 30 inches (76 cm). The minimum clearance between the deflector bars and the forward edge of the escape opening must be at least 23 1/4 inches (59 cm).

* * * * *

(d) * * *

(6) *Water deflector fin for hooped hard TEDs.* On a hooped hard TED, a water deflector fin may be welded to the forward edge of the escape opening. The fin must be constructed of a flat aluminum bar, up to 3/8 inch (0.95 cm) thick and up to 4 inches (10.2 cm) deep. The fin may be as wide as the width of the escape opening, minus 1 inch (2.5 cm). The fin must project aft into the

TED with an angle between 5° and 45° from the normal, horizontal plane of the trawl. On an inshore hooped hard TED, the clearance between the deflector bars and the posterior edge of the deflector fin must be at least 20 inches (51 cm). On an offshore hooped hard TED, the clearance between the deflector bars and the posterior edge of the deflector fin must be at least 23–1/4 inches (59 cm).

(7) *Hinged door frame for hooped hard TEDs.* A hinged door frame may be attached to the forward edge of the escape opening on a hooped hard TED. The door frame must be constructed of materials specified at paragraphs (a)(1)(i) or (a)(1)(ii) of this section for inshore and offshore hooped hard TEDs, respectively. The door frame may be covered with a single panel of mesh webbing that is taut and securely attached with twine to the perimeter of the door frame, with a mesh size not greater than that used for the TED extension webbing. The door frame must be at least as wide as the TED escape opening. The door frame may be a maximum of 24 inches (61 cm) long. The door frame must be connected to the forward edge of the escape opening by a hinge device that allows the door to open outwards freely. The posterior edge of the door frame, in the closed position, must lie at least 12 inches (30 cm) forward of the posterior edge of the escape opening. A water deflector fin may be welded to the posterior edge of the hinged door frame. The fin must be constructed of a flat aluminum bar, up to 3/8 inch (0.95 cm) thick and up to four inches (10.2 cm) deep. The fin may be as wide as the width of the escape opening, minus one inch (2.5 cm). The fin must project aft into the TED with an angle between 5° and 45° from the normal, horizontal plane of the trawl, when the door is in the closed position. The clearance between the posterior edge of the escape opening and the posterior edge of the door frame or the posterior edge of the water deflector fin, if installed, must be no less than 12 inches (30 cm), when the door is in the closed position. Two stopper ropes or a hinge limiter may be used to limit the maximum opening height of the hinged door frame, as long as they do not obstruct the escape opening in any way or restrict the free movement of the door to its fully open position. When the door is in its fully open position, the minimum clearance between any part of the deflector bars and any part of the door, including a water deflector fin if installed, must be at least 20 inches (51 cm) for an inshore hooped hard TED and at least 23 1/4 inches (59 cm) for an offshore hooped hard TED. The hinged door frame may not be used in combination with a webbing flap specified at paragraph (d)(3) of this section or with a water deflection fin specified at paragraph (d)(6) of this section.

* * * * *

[FR Doc. 03–21858 Filed 8–21–03; 5:02 pm]

BILLING CODE 3510–22–S

DEPARTMENT OF COMMERCE

National Oceanic and Atmospheric Administration

50 CFR Part 679

[Docket No. 021122286–3036–02; I.D. 082003D]

Fisheries of the Exclusive Economic Zone Off Alaska; Pacific Ocean Perch in the Eastern Aleutian District of the Bering Sea and Aleutian Islands

AGENCY: National Marine Fisheries Service (NMFS), National Oceanic and Atmospheric Administration (NOAA), Commerce.

ACTION: Closure.

SUMMARY: NMFS is prohibiting retention of Pacific ocean perch in the Eastern Aleutian District of the Bering Sea and Aleutian Islands (BSAI). NMFS is requiring that catch of Pacific ocean perch in this area be treated in the same manner as prohibited species and discarded at sea with a minimum of injury. This action is necessary because the allocation of the Pacific ocean perch 2003 total allowable catch (TAC) in this area has been achieved.

DATES: Effective 1200 hrs, Alaska local time (A.l.t.), August 23, 2003, until 2400 hrs, A.l.t., December 31, 2003.

FOR FURTHER INFORMATION CONTACT: Josh Keaton, 907–586–7228.

SUPPLEMENTARY INFORMATION: NMFS manages the groundfish fishery in the BSAI exclusive economic zone according to the Fishery Management Plan for the Groundfish Fishery of the Bering Sea and Aleutian Islands (FMP) prepared by the North Pacific Fishery Management Council under authority of the Magnuson-Stevens Fishery Conservation and Management Act. Regulations governing fishing by U.S. vessels in accordance with the FMP appear at subpart H of 50 CFR part 600 and CFR part 679. The allocation of the Pacific ocean perch TAC in the Eastern Aleutian District of the BSAI was established as 3,238 metric tons (mt) by the final 2003 harvest specifications for groundfish in the BSAI and the reserve apportionment (68 FR 9907, March 3, 2003). The allocation of Pacific ocean perch TAC in the Eastern Aleutian District of the BSAI to Community Development Quota (CDQ) participants was established as 263 mt by the final 2003 harvest specifications for groundfish in the BSAI.

In accordance with § 679.20(d)(2), the Administrator, Alaska Region, NMFS, has determined that the allocation of the Pacific ocean perch TAC in the Eastern Aleutian District of the BSAI has been reached. Therefore, NMFS is requiring that further catches of Pacific ocean perch TAC in the Eastern Aleutian District of the BSAI be treated as prohibited species in accordance with § 679.21(b).

As of August 19, 2003, 125 mt of the Pacific ocean perch CDQ reserve in the Eastern Aleutian District of the BSAI remains unharvested. Therefore, CDQ participants are not yet required to treat catch of Pacific ocean perch in the Eastern Aleutian District of the BSAI as a prohibited species.

Classification

This action responds to the best available information recently obtained from the fishery. The Assistant Administrator for Fisheries, NOAA (AA), finds good cause to waive the requirement to provide prior notice and opportunity for public comment pursuant to the authority set forth at 5 U.S.C. 553(b)(B) as such requirement is contrary to the public interest. This requirement is contrary to the public interest as it would delay the prohibition of retention, lead to exceeding the TAC of Pacific ocean perch in the Eastern Aleutian District of the BSAI, and therefore reduce the public's ability to use and enjoy the fishery resource.

The AA also finds good cause to waive the 30–day delay in the effective date of this action under 5 U.S.C. 553(d)(3). This finding is based upon the reasons provided above for waiver of prior notice and opportunity for public comment.

This action is required by § 679.20 and is exempt from review under Executive Order 12866.

Authority: 16 U.S.C. 1801 *et seq.*

Dated: August 21, 2003.

Bruce C. Morehead,

Acting Director, Office of Sustainable Fisheries, National Marine Fisheries Service.

[FR Doc. 03–21933 Filed 8–22–03; 2:45 pm]

BILLING CODE 3510–22–S

Proposed Rules

Federal Register
Vol. 68, No. 166
Wednesday, August 27, 2003

This section of the FEDERAL REGISTER contains notices to the public of the proposed issuance of rules and regulations. The purpose of these notices is to give interested persons an opportunity to participate in the rule making prior to the adoption of the final rules.

NUCLEAR REGULATORY COMMISSION

10 CFR Part 40

State of Utah: NRC Staff Assessment of Utah's Proposed Alternative Standard To Use Utah's Existing Groundwater Regulation in Lieu of the Nuclear Regulatory Commission Regulations

AGENCY: Nuclear Regulatory Commission.

ACTION: Notice and opportunity for public hearing on Utah's proposal to use alternative groundwater protection standards for uranium mills and 11e.(2) byproduct material disposal facilities.

SUMMARY: By letter dated October 23, 2002, to Paul Lohaus, Director, Office of State and Tribal Programs, U.S. Nuclear Regulatory Commission (NRC), William J. Sinclair, Director, Division of Radiation Control (the Division), State of Utah, submitted information on how the Division proposes to regulate a portion of the groundwater aspects of uranium milling in the State of Utah. Utah's proposed approach is to use its existing groundwater protection regulations, based on Environmental Protection Agency (EPA) drinking water limits, in lieu of a portion of the specific groundwater requirements in Appendix A to 10 CFR part 40 (Appendix A). The Commission has determined that Utah's proposed approach constitutes use of alternative standards. Under section 274o of the Atomic Energy Act, as amended (Act), the Commission must make a determination that such alternatives will achieve a level of stabilization and containment of the sites concerned, and a level of protection for public health, safety, and the environment from radiological and non-radiological hazards associated with such sites, after notice and opportunity for public hearing. Through this **Federal Register** notice, the Commission intends to fulfill both the notice and opportunity for public hearing provisions of section 274o of the Act.

DATES: The comment period expires September 26, 2003. Comments received after this date will be considered if it is practical to do so, but the Commission cannot assure consideration of comments received after the expiration date.

ADDRESSES: Written comments may be submitted to Secretary, U.S. Nuclear Regulatory Commission, Washington, DC 20555–0001, Attention: Rulemaking and Adjudications Staff.

E-mail comments to: *SECY@nrc.gov.* If you do not receive a reply e-mail confirming that we have received your comments, contact us directly at (301) 415–1966.

Hand deliver comments to: 11555 Rockville Pike, Rockville, Maryland 20852, between 7:30 am and 4:15 p.m. Federal workdays. (Telephone (301) 415–1966.)

Fax comments to: Secretary, U.S. Nuclear Regulatory Commission at (301) 415–1101.

Publicly available documents created or received at the NRC after November 1, 1999, are available electronically at the NRC's Electronic Reading Room at *http://www.nrc.gov/NRC/ADAMS/index.html.* From this site, the public can gain entry into the NRC's Agencywide Document Access and Management System (ADAMS), which provides text and image files of NRC's public documents. Copies of documents cited in this section are available through ADAMS. If you do not have access to ADAMS or if there are problems in accessing the documents located in ADAMS, contact the NRC Public Document Room (PDR) Reference staff at 1–800–397–4209, 301–415–4737 or by e-mail to *pdr@nrc.gov.*

The Division has posted documents related to its amendment application including the alternative groundwater regulations on the Division's Web site at: *http://www.deq.state.ut.us/EQRAD/milllst.htm.*

Copies of comments received by NRC may be examined at the NRC Public Document Room, 11555 Rockville Pike, Public File Area O–1–F21, Rockville, Maryland. Copies of the Division's submittal and copies of the NRC Staff correspondence with the Division are also available for public inspection in the NRC's Public Document Room. The ADAMS Accession Numbers are presented with the first mention of each document (*i.e.*, ML.* * *).

FOR FURTHER INFORMATION CONTACT: Dennis M. Sollenberger, Office of State and Tribal Programs, U.S. Nuclear Regulatory Commission, Washington, DC 20555–0001. Telephone (301) 415–2819 or e-mail *dms4@nrc.gov.*

SUPPLEMENTARY INFORMATION:

Background

Since section 274 of the Act was added in 1959, the Commission has entered into Agreements with 33 States that authorize a State to regulate the use of radioactive material within the State. NRC periodically reviews the performance of the Agreement States to assure compliance with the provisions of section 274. The Act was amended in 1983 to add the last paragraph of section 274o which requires the Commission to make a determination, after notice and opportunity for public hearing, that alternative standards will achieve a level of stabilization and containment of the sites concerned, and a level of protection for public health, safety, and the environment from radiological and non-radiological hazards associated with such sites, which is equivalent to, to the extent practicable, or more stringent than the level which would be achieved by standards and requirements adopted and enforced by the Commission for the same purpose and any final standards promulgated by the Administrator of the Environmental Protection Agency (EPA) in accordance with section 275.

The State of Utah Agreement became effective April 1, 1984, but did not include authority for 11e.(2) byproduct material or the land disposal of source, byproduct and special nuclear material received from other persons. In 1990, Utah amended its Agreement to include land disposal of source, byproduct and special nuclear material received from other persons. In 1996, Utah returned its authority for the evaluation of radiation safety information on sealed sources and devices containing byproduct, source, or special nuclear materials and the registration of the sealed sources or devices for distribution, as provided for in regulations. The State of Utah initiated further amendment of their current section 274b Agreement to add authority for 11e.(2) byproduct material by a letter of intent from Governor Michael Leavitt dated June 26, 2001

(ML013250419). By letter dated November 19, 2001 from William J. Sinclair, Director, Division of Radiation Control, Utah submitted a draft application to amend its Agreement (ML013250578). NRC sent comments on the draft application to Utah by letter dated February 21, 2002 (ML020530319). The draft application did not contain either draft or final regulations for the control of 11e.(2) byproduct material. Utah subsequently developed draft and final regulations on which the NRC staff provided comments (ML021490340, ML021790511, ML022110416, and ML023290240). Under the proposed amendment, four NRC licenses would transfer to Utah.

In its review of Utah's draft regulations, the staff identified that Utah proposed to use its existing groundwater protection standards to protect the waters of the State from uranium milling operations, in lieu of the groundwater protection requirements in Appendix A. Utah's regulations are based on the EPA's hazardous waste program and differ in several respects from the groundwater protection provisions in Appendix A. Therefore, the Commission has determined that Utah's proposed approach constitutes the use of alternative standards.

The NRC had not previously identified any instances in which an Agreement State had proposed alternative standards under section 274o and, therefore, the implementing process for this provision had not been previously developed. Upon receiving the Utah request, the NRC undertook development of an implementing process which included a Commission determination that notice through the **Federal Register** and a hearing process similar to the process in subpart H of 10 CFR part 2, ''Rulemaking,'' would fulfill the NRC's requirements in section 274o. Additionally, as part of that process, the NRC staff requested that Utah provide an analysis that compares the differences between the Utah regulations and NRC's regulations, and demonstrates that, notwithstanding these differences, the Utah groundwater regulations meet the provisions in section 274o. Utah submitted its response supporting the substitution of Utah's groundwater regulations for NRC's regulations, by letter dated October 23, 2002 (ML022980335).

This notice is being published in fulfillment of the requirement to notice and provide an opportunity for public hearing in this instance.

Discussion

In its application for the amended Agreement, Utah stated that the Director, Division of Radiation Control, was designated, by the Water Quality Board, as a Co-Executive Secretary of the Water Quality Board (see Utah Code Annotated (UCA) 19–5–106 and 19–5–104(1)(k)). As Co-Executive Secretary, the Director, Division of Radiation Control, has legal authority to issue, administer, and enforce specific groundwater permits under the Utah Water Quality Rule R317–6 as applied to the current four 11e.(2) byproduct material facilities that would transfer to Utah. The four current NRC licensed facilities are: Envirocare, Rio Algom, International Uranium Corporation, and Plateau Resources Limited. Therefore, the Division of Radiation Control has substituted the Utah Administrative Code R317–6, Groundwater Quality Protection, for certain of the groundwater standards provided in 10 CFR part 40, Appendix A (specifically Criteria 5B(1) through 5H, 7A, and 13). In addition, under State procedures, appeals of enforcement proceedings and permit issues relating to groundwater would be administered through the Water Quality Board.

NRC considers the substitution of R317–6 for the groundwater protection regulations in 10 CFR part 40, Appendix A, Criteria 5B(1) through 5H, 7A, and 13 to be the substitution of an alternative standard. The substitution was proposed in Utah Administrative Code R313–24–4(1)(b). On October 23, 2002, Utah provided a comparative analysis of R317–6 to the Appendix A standards listed above (ML022980335). Utah's analysis concludes that R317–6 provides an equivalent level of protection of the groundwater as the NRC standards. Implementation of R317–6 would be accomplished through issuance of a separate groundwater discharge permit for the specific site in addition to the radioactive materials license. Of the four current NRC licensed facilities, two of the facilities (Envirocare and Plateau Resources Limited) have existing Utah groundwater discharge permits, International Uranium Corporation is in discussions with Utah for a groundwater discharge permit, and Rio Algom is currently implementing a groundwater remediation program.

NRC staff reviewed the Utah groundwater protection regulations (R317–6), the Utah comparative analysis for R317–6, and the administrative approach in the Utah groundwater protection permitting process to determine if the resulting overall approach meets the requirements for alternative standards in section 274o. The NRC staff review focused on three major areas: the administrative procedure including the permitting process, the specific numerical limits in the regulations, and the hazardous constituents that must be considered in setting standards at a specific site.

Utah's administrative process of issuing separate groundwater discharge permits as well as the other procedural requirements in R317–6 differ from the process in Criteria 5B(1) through 5H and 7A. However, staff's review concluded that they accomplish the same regulatory outcome of establishing a site-specific groundwater protection program for both radiological and nonradiological hazards associated with 11e.(2) byproduct material that is consistent with the groundwater protection regulations of the Commission.

The NRC staff review of the specific numerical limits in R317–6 determined that the specific values in R317–6 were based on the EPA drinking water limits (primary and some secondary limits) and that Utah had updated its groundwater protection regulations to reflect current EPA drinking water regulations in 40 CFR parts 141 and 142. Although the numerical limits in NRC regulations are also based on EPA drinking water limits, they are based on EPA limits in effect in 1983 when EPA issued its uranium milling regulations in 40 CFR part 192, subparts D and E. Thus, Utah's rules reflect some differences, discussed further below, that are included in the current issuances of EPA's drinking water limits.

The Utah groundwater regulations apply to all facilities in the State unless specifically exempted in the regulations, *i.e.*, the effect of using R317–6 is to apply consistent groundwater regulations to uranium milling facilities as well as other industries in the State of Utah. The NRC staff review identified the following differences between the specific numerical limits in R617–6 and the NRC regulations: (1) Four chemical constituents listed in R317–6 have higher (less stringent) values than specified in NRC's regulations; (2) several chemical constituents listed in R317–6 have lower (more stringent) values than specified in NRC's regulations; and (3) R317–6 also includes specific numerical values for chemical constituents that are not listed in NRC regulations, but are listed in the EPA primary or secondary drinking water standards (and thus may be more stringent than NRC regulations). Given this, and as discussed further below, the NRC staff concludes that the Utah regulation, R317–6, has the same objective and basis as the NRC regulations, although the Utah

regulation has been updated as EPA has updated its drinking water regulations in 40 CFR parts 141 and 142 to reflect current constituents and limits.

Utah's specific constituents and limit values (higher, lower, and not identified in NRC regulations) are based on the EPA maximum concentration limits (MCLs) in its primary or secondary drinking water standards as updated by EPA. As noted above, NRC standards are based on the MCLs in effect in 1983 when EPA issued its uranium milling regulations. Therefore, the different values for the MCLs are due to EPA updating its MCLs in 40 CFR parts 141 and 142 based on newer scientific information. NRC staff has used the newer values when NRC licensees have proposed their use as part of an Alternate Concentration Limit (ACL) proposal as permitted in Appendix A, to 10 CFR part 40. Based on this information, NRC staff concludes that the Utah groundwater protection regulation (R317–6) has the same objective as NRC's regulations and is based on the same EPA standards that form the basis for the NRC regulations even through the Utah regulation is based on the more recent version of the EPA regulations. Thus, the differences between the proposed Utah groundwater protection regulations and the 10 CFR part 40, Appendix A groundwater protection standards are essentially the differences between the two versions of the EPA regulations. Because NRC regulations in this area must conform to those in 40 CFR part 192, subparts D and E, until such time as EPA updates these regulations, NRC is not able, by law, to update its regulations. However, the public health, safety, and environmental protection objectives are the same in both regulations.

The Utah regulation at R317–6–6.3.I.6 also includes a reference to the EPA RCRA Groundwater Monitoring Technical Enforcement Guidance Manual (1986) for use in selecting constituents for groundwater monitoring and this document uses the current list of constituents in 40 CFR part 261, Appendix VIII, which has been updated by EPA since it was used earlier as the basis for Criterion 13 of 10 CFR part 40, Appendix A. The updated list drops certain chemicals listed in Criterion 13 and includes other constituents not currently listed in Criterion 13. Utah has stated that it will use Criterion 13 and the list in 40 CFR part 261, Appendix VIII, as guidance in selecting the constituents to be monitored at 11e.(2) byproduct materials facilities. The constituents selected will be based on the feed material to the facility and the process chemicals used at the facility. This selection process is equivalent to the hazardous constituent selection process in Criteria 5B(2) and 5B(3).

Therefore, the NRC staff conclusion is that the Utah Administrative Code R317–6 provides a level of protection for public health, safety, and the environment from radiological and nonradiological hazards associated with such sites, which is equivalent to, to the extent practicable, or more stringent than the level which would be achieved by standards and requirements adopted and enforced by the Commission for the same purpose.

Section 274o Hearing for Alternative Standards

The Commission has approved the use of a hearing process similar to the provisions in subpart H of 10 CFR part 2 for the ''hearing'' component required by the last paragraph of section 274o. The proposed alternative standards have been subject to the State of Utah rulemaking process which includes opportunity for a public hearing. A hearing process similar to the provisions in subpart H is not intended to duplicate the State's process; rather, it will be used to provide sufficient information for the Commission to make the determination required in section 274o.

Pursuant to the hearing process set forth in subpart H of 10 CFR part 2, the Commission is requesting information from interested members of the public on the alternative standards proposed by the State of Utah of substituting Utah Administrative Code R317–6 for the groundwater protection standards in 10 CFR part 40, Appendix A, Criteria 5B(1) through 5H, 7A, and 13. The NRC staff will evaluate the information received and provide the information to the Commission for a final determination. The issue under consideration is:

Does the Utah alternative standard achieve a level of stabilization and containment of the sites concerned, and a level of protection for public health, safety, and the environment from radiological and nonradiological hazards associated with such sites, which is equivalent to, to the extent practicable, or more stringent than the level which would be achieved by standards and requirements adopted and enforced by the Commission for the same purpose and any final standards promulgated by the Administrator of the Environmental Protection Agency in accordance with section 275?

Environmental Analysis

The environmental impact of a Commission determination that an Agreement State's alternative standards that have been found to provide a level of protection that is equivalent to, to the extent practicable, or more stringent than standards promulgated by NRC or the Administrator of EPA under section 275 are within the generic impact analysis conducted by NRC and EPA in promulgating their standards and requirements (NUREG–0706, ''Final Generic Environmental Impact Statement on Uranium Milling,'' and EPA 520/1–83–008, ''Final Environmental Impact Statement for Standards for the Control of Byproduct Materials from Uranium Processing''). Any site-specific application of alternative standards in Agreement States will be evaluated under the State's environmental assessment required of the State under the section 274o.

Dated at Rockville, Maryland, this 21st day of August, 2003.

For the Nuclear Regulatory Commission.

Annette L. Vietti-Cook,

Secretary of the Commission.

[FR Doc. 03–21884 Filed 8–26–03; 8:45 am]

BILLING CODE 7590–01–P

DEPARTMENT OF TRANSPORTATION

Federal Aviation Administration

14 CFR Part 39

[Docket No. 2002–NM–105–AD]

RIN 2120–AA64

Airworthiness Directives; McDonnell Douglas Model DC–9–10, DC–9–20, DC–9–30; DC–10–40, and DC–10–50 Series Airplanes; Model DC–9–81 (MD–81), DC–9–82 (MD–82), DC–9–83 (MD–83), and DC–9–87 (MD–87) Airplanes; and Model MD–88 Airplanes

AGENCY: Federal Aviation Administration, DOT.

ACTION: Notice of proposed rulemaking (NPRM).

SUMMARY: This document proposes the adoption of a new airworthiness directive (AD) that is applicable to certain McDonnell Douglas transport category airplanes. This proposal would require an inspection of the upper lock link assembly of the nose landing gear (NLG) to determine the manufacturer, repetitive eddy current inspections for cracking, and modification or replacement if necessary. This proposal also would provide for optional terminating action for the repetitive inspections. This action is necessary to prevent fracture of the upper lock link

assembly of the NLG, which could result in failure of the NLG to extend following a gear-down selection, and consequent gear-up landing, structural damage, and possible injury to passengers and crew. This action is intended to address the identified unsafe condition.

DATES: Comments must be received by October 14, 2003.

ADDRESSES: Submit comments in triplicate to the Federal Aviation Administration (FAA), Transport Airplane Directorate, ANM–114, Attention: Rules Docket No. 2002–NM–105–AD, 1601 Lind Avenue, SW., Renton, Washington 98055–4056. Comments may be inspected at this location between 9 a.m. and 3 p.m., Monday through Friday, except Federal holidays. Comments may be submitted via fax to (425) 227–1232. Comments may also be sent via the Internet using the following address: *9-anm-nprmcomment@faa.gov.* Comments sent via fax or the Internet must contain ''Docket No. 2002–NM–105–AD'' in the subject line and need not be submitted in triplicate. Comments sent via the Internet as attached electronic files must be formatted in Microsoft Word 97 or 2000 or ASCII text.

The service information referenced in the proposed rule may be obtained from Boeing Commercial Aircraft Group, Long Beach Division, 3855 Lakewood Boulevard, Long Beach, California 90846, Attention: Data and Service Management, Dept. C1–L5A (D800–0024). This information may be examined at the FAA, Transport Airplane Directorate, 1601 Lind Avenue, SW., Renton, Washington.

FOR FURTHER INFORMATION CONTACT: Mike Lee, Aerospace Engineer, Airframe Branch, ANM–120L, FAA, Los Angeles Aircraft Certification Office, 3960 Paramount Boulevard, Lakewood, California 90712; telephone (562) 627–5325; fax (562) 627–5210.

SUPPLEMENTARY INFORMATION:

Comments Invited

Interested persons are invited to participate in the making of the proposed rule by submitting such written data, views, or arguments as they may desire. Communications shall identify the Rules Docket number and be submitted in triplicate to the address specified above. All communications received on or before the closing date for comments, specified above, will be considered before taking action on the proposed rule. The proposals contained in this action may be changed in light of the comments received.

Submit comments using the following format:

- Organize comments issue-by-issue. For example, discuss a request to change the compliance time and a request to change the service bulletin reference as two separate issues.
- For each issue, state what specific change to the proposed AD is being requested.
- Include justification (*e.g.*, reasons or data) for each request.

Comments are specifically invited on the overall regulatory, economic, environmental, and energy aspects of the proposed rule. All comments submitted will be available, both before and after the closing date for comments, in the Rules Docket for examination by interested persons. A report summarizing each FAA-public contact concerned with the substance of this proposal will be filed in the Rules Docket.

Commenters wishing the FAA to acknowledge receipt of their comments submitted in response to this action must submit a self-addressed, stamped postcard on which the following statement is made: ''Comments to Docket Number 2002–NM–105–AD.'' The postcard will be date stamped and returned to the commenter.

Availability of NPRMs

Any person may obtain a copy of this NPRM by submitting a request to the FAA, Transport Airplane Directorate, ANM–114, Attention: Rules Docket No. 2002–NM–105–AD, 1601 Lind Avenue, SW., Renton, Washington 98055–4056.

Discussion

The FAA has received a report indicating that an operator of a Model DC–9–82 (MD–82) airplane was unable to extend the nose landing gear (NLG) during landing. As a result of this problem, the operator landed with the nose gear up, which caused moderate damage to the nose gear doors, avionics door, and adjacent structure. Investigation of the damage revealed that the upper lock link of the NLG was completely fractured. Boeing has determined that tool marks and/or rough surface finish across the parting plane can cause stress concentration and cracking along the forged parting plane of the upper lock link. The Component Maintenance Manual is being revised to incorporate minimum surface finish and height requirements for the upper lock link. Fracture of the upper lock link assembly of the NLG could result in failure of the NLG to extend following a gear-down selection, and consequent gear-up landing, structural damage, and possible injury to passengers and crew.

Explanation of Relevant Service Information

We have reviewed and approved Boeing Alert Service Bulletin DC9–32A340, dated November 14, 2001, which describes procedures for a visual inspection of the upper lock link assembly of the NLG to determine if the part was manufactured by Ready Machine and Manufacturing Company, and (regardless of manufacturer) repetitive high frequency eddy current (HFEC) inspections for cracking of the assembly, and modification or replacement of the assembly with a new assembly if cracking is found. The modification includes chemically stripping the lock link assembly, verifying the distance between the machined surface and lower surface parting line, doing a fluorescent dye penetrant inspection for cracking, doing another HFEC inspection for cracking, shotpeening the machined surface, reidentifying the reworked upper link, and refinishing. The service bulletin also describes an adjustment and test for the nose gear linkages, and provides for optional terminating action for the repetitive inspections if no cracking is found. Accomplishment of the actions specified in the service bulletin is intended to adequately address the identified unsafe condition.

Explanation of Requirements of Proposed Rule

Since an unsafe condition has been identified that is likely to exist or develop on other products of this same type design, the proposed AD would require accomplishment of the actions specified in the service bulletin described previously. The actions would be required to be accomplished in accordance with the service bulletin described previously, except that the proposed AD does not require submitting Appendix A (report of inspection findings), and except as discussed below.

Difference Between Proposed AD and Service Bulletin

The Accomplishment Instructions of the service bulletin describe procedures for completing a sheet to record and report negative inspection findings. However, this proposed AD would not require a report; we do not need this information from operators.

Changes to 14 CFR Part 39/Effect on the Proposed AD

On July 10, 2002, the FAA issued a new version of 14 CFR part 39 (67 FR

47997, July 22, 2002), which governs the FAA's airworthiness directives system. The regulation now includes material that relates to altered products, special flight permits, and alternative methods of compliance. Because we have now included this material in part 39, we no longer need to include it in each individual AD.

Cost Impact

There are approximately 1,904 airplanes of the affected design in the worldwide fleet. The FAA estimates that 1,188 airplanes of U.S. registry would be affected by this proposed AD.

It would take approximately 1 work hour per airplane to accomplish the proposed visual inspection, at an average labor rate of $60 per work hour. Based on these figures, the cost impact of the proposed visual inspection on U.S. operators is estimated to be $71,280, or $60 per airplane.

It would take approximately 1 work hour per airplane to accomplish the proposed high frequency eddy current (HFEC) inspection, at an average labor rate of $60 per work hour. Based on these figures, the cost impact of the proposed HFEC inspection on U.S. operators is estimated to be $71,280, or $60 per airplane, per inspection cycle.

It would take approximately 11 work hours per airplane to accomplish the proposed modification, at an average labor rate of $60 per work hour. Based on these figures, the cost impact of the proposed modification on U.S. operators is estimated to be $784,080, or $660 per airplane.

It would take approximately 8 work hours per airplane to accomplish the proposed replacement, at an average labor rate of $60 per work hour. Required parts would cost approximately $9,981 per airplane. Based on these figures, the cost impact of the proposed replacement on U.S. operators is estimated to be $12,427,668, or $10,461 per airplane.

The cost impact figures discussed above are based on assumptions that no operator has yet accomplished any of the proposed requirements of this AD action, and that no operator would accomplish those actions in the future if this proposed AD were not adopted. The cost impact figures discussed in AD rulemaking actions represent only the time necessary to perform the specific actions actually required by the AD. These figures typically do not include incidental costs, such as the time required to gain access and close up, planning time, or time necessitated by other administrative actions.

Regulatory Impact

The regulations proposed herein would not have a substantial direct effect on the States, on the relationship between the national Government and the States, or on the distribution of power and responsibilities among the various levels of government. Therefore, it is determined that this proposal would not have federalism implications under Executive Order 13132.

For the reasons discussed above, I certify that this proposed regulation (1) is not a ''significant regulatory action'' under Executive Order 12866; (2) is not a ''significant rule'' under the DOT Regulatory Policies and Procedures (44 FR 11034, February 26, 1979); and (3) if promulgated, will not have a significant economic impact, positive or negative, on a substantial number of small entities under the criteria of the Regulatory Flexibility Act. A copy of the draft regulatory evaluation prepared for this action is contained in the Rules Docket. A copy of it may be obtained by contacting the Rules Docket at the location provided under the caption **ADDRESSES.**

List of Subjects in 14 CFR Part 39

Air transportation, Aircraft, Aviation safety, Safety.

The Proposed Amendment

Accordingly, pursuant to the authority delegated to me by the Administrator, the Federal Aviation Administration proposes to amend part 39 of the Federal Aviation Regulations (14 CFR part 39) as follows:

PART 39—AIRWORTHINESS DIRECTIVES

1. The authority citation for part 39 continues to read as follows:

Authority: 49 U.S.C. 106(g), 40113, 44701.

§ 39.13 [Amended]

2. Section 39.13 is amended by adding the following new airworthiness directive:

McDonnell Douglas: Docket 200–NM–105–AD.

Applicability: Model DC–9–11, DC–9–12, DC–9–13, DC–9–14, DC–9–15, and DC–9–15F airplanes; Model DC–9–21 airplanes; Model DC–9–31, DC–9–32, DC–9–32 (VC–9C), DC–9–32F (C–9A, C–9B), DC–9–33F, DC–9–34 airplanes; Model DC–9–41 airplanes; Model DC–9–51 airplanes; Model DC–9–81 (MD–81), DC–9–82 (MD–82), DC–9–83 (MD–83), and DC–9–87 (MD–87) airplanes; and Model MD–88 airplanes; as listed in Boeing Alert Service Bulletin DC9–32A340, dated November 14, 2001; certificated in any category.

Compliance: Required as indicated, unless accomplished previously.

To prevent fracture of the upper lock link assembly of the nose landing gear (NLG), which could result in failure of the NLG to extend following a gear-down selection, and consequent gear-up landing, structural damage, and possible injury to passengers and crew; accomplish the following:

One-Time Inspection

(a) Within 2,500 flight cycles after the effective date of this AD: Do a general visual inspection to determine if the upper lock link assembly of the NLG was manufactured by Ready Machine and Manufacturing Company (this can be identified by the letters ''RM'' or an ''F'' suffix adjacent to the serial numbers), per the Accomplishment Instructions of Boeing Alert Service Bulletin DC9–32A340, excluding Appendix A, dated November 14, 2001. Then do the actions specified in paragraph (b) or (c) of this AD, as applicable.

Note 1: For the purposes of this AD, a general visual inspection is defined as: ''A visual examination of an interior or exterior area, installation, or assembly to detect obvious damage, failure, or irregularity. This level of inspection is made from within touching distance unless otherwise specified. A mirror may be necessary to enhance visual access to all exposed surfaces in the inspection area. This level of inspection is made under normally available lighting conditions such as daylight, hangar lighting, flashlight, or droplight and may require removal or opening of access panels or doors. Stands, ladders, or platforms may be required to gain proximity to the area being checked.''

Repetitive Inspections/Modification or Replacement, if Necessary

(b) If the upper lock link assembly of the NLG was manufactured by Ready Machine and Manufacturing Company: Within 2,500 flight cycles after the effective date of this AD, do a high frequency eddy current (HFEC) inspection of the assembly for cracking, per Condition 1 of the Accomplishment Instructions of Boeing Alert Service Bulletin DC9–32A340, excluding Appendix A, dated November 14, 2001.

(1) If no cracking is found, repeat the inspection at intervals not to exceed 4,000 flight cycles until accomplishment of paragraph (d) of this AD.

(2) If any cracking is found, before further flight, modify or replace the upper lock link assembly, as applicable, per the service bulletin.

(c) If the upper lock link assembly was not manufactured by Ready Machine and Manufacturing Company: Within 3,500 flight cycles after the effective date of this AD, do a HFEC inspection of the assembly for cracking, per Condition 2 of the Accomplishment Instructions of Boeing Alert Service Bulletin DC9–32A340, excluding Appendix A, dated November 14, 2001.

(1) If no cracking is found, repeat the inspection at intervals not to exceed 4,000 flight cycles until accomplishment of paragraph (d) of this AD.

(2) If any cracking is found, before further flight, modify or replace the upper lock link assembly, as applicable, per the service bulletin.

Optional Terminating Action

(d) Modification or replacement of the upper lock link assembly of the NLG, as applicable, per Boeing Alert Service Bulletin DC9–32A340, excluding Appendix A, dated November 14, 2001, terminates the repetitive inspections required by paragraph (b) or (c) of this AD, as applicable.

Alternative Methods of Compliance

(e) In accordance with 14 CFR 39.19, the Manager, Los Angeles Aircraft Certification Office, FAA, is authorized to approve alternative methods of compliance for this AD.

Issued in Renton, Washington, on August 21, 2003.

Ali Bahrami,

Acting Manager, Transport Airplane Directorate, Aircraft Certification Service.

[FR Doc. 03–21874 Filed 8–26–03; 8:45 am]

BILLING CODE 4910–13–P

DEPARTMENT OF TRANSPORTATION

Federal Aviation Administration

14 CFR Part 39

[Docket No. 2001–NM–180–AD]

RIN 2120–AA64

Airworthiness Directives; Boeing Model 747–100, 747–100B, 747–100B SUD, 747–200B, 747–200C, 747–200F, 747–300, 747–400, 747SR, and 747SP Series Airplanes

AGENCY: Federal Aviation Administration, DOT.

ACTION: Notice of proposed rulemaking (NPRM).

SUMMARY: This document proposes the adoption of a new airworthiness directive (AD) that is applicable to certain Boeing airplane models. This proposal would require a one-time inspection to identify all H–11 steel bolts installed in the latch fittings of the cargo doors, repetitive inspections for cracked or broken H–11 steel bolts, and follow-on and corrective actions if necessary. This proposal also would require eventual replacement of all H–11 steel bolts in the latch fittings of the cargo doors with Inconel bolts. This action is necessary to prevent broken bolts in the latch fittings, which could reduce the capability of the door latch to keep the door closed, and result in loss of a cargo door and consequent rapid depressurization of the airplane. This action is intended to address the identified unsafe condition.

DATES: Comments must be received by October 14, 2003.

ADDRESSES: Submit comments in triplicate to the Federal Aviation Administration (FAA), Transport Airplane Directorate, ANM–114, Attention: Rules Docket No. 2001–NM–180–AD, 1601 Lind Avenue, SW., Renton, Washington 98055–4056. Comments may be inspected at this location between 9 a.m. and 3 p.m., Monday through Friday, except Federal holidays. Comments may be submitted via fax to (425) 227–1232. Comments may also be sent via the Internet using the following address: *9-anm-nprmcomment@faa.gov.* Comments sent via fax or the Internet must contain ''Docket No. 2001–NM–180–AD'' in the subject line and need not be submitted in triplicate. Comments sent via the Internet as attached electronic files must be formatted in Microsoft Word 97 or 2000 or ASCII text.

The service information referenced in the proposed rule may be obtained from Boeing Commercial Airplane Group, P.O. Box 3707, Seattle, Washington 98124–2207. This information may be examined at the FAA, Transport Airplane Directorate, 1601 Lind Avenue, SW., Renton, Washington.

FOR FURTHER INFORMATION CONTACT: Rick Kawaguchi, Aerospace Engineer, Airframe Branch, ANM–120S, FAA, Seattle Aircraft Certification Office, 1601 Lind Avenue, SW., Renton, Washington 98055–4056; telephone (425) 917–6434; fax (425) 917–6590.

SUPPLEMENTARY INFORMATION:

Comments Invited

Interested persons are invited to participate in the making of the proposed rule by submitting such written data, views, or arguments as they may desire. Communications shall identify the Rules Docket number and be submitted in triplicate to the address specified above. All communications received on or before the closing date for comments, specified above, will be considered before taking action on the proposed rule. The proposals contained in this action may be changed in light of the comments received.

Submit comments using the following format:

- Organize comments issue-by-issue. For example, discuss a request to change the compliance time and a request to change the service bulletin reference as two separate issues.
- For each issue, state what specific change to the proposed AD is being requested.
- Include justification (e.g., reasons or data) for each request.

Comments are specifically invited on the overall regulatory, economic, environmental, and energy aspects of the proposed rule. All comments submitted will be available, both before and after the closing date for comments, in the Rules Docket for examination by interested persons. A report summarizing each FAA-public contact concerned with the substance of this proposal will be filed in the Rules Docket.

Commenters wishing the FAA to acknowledge receipt of their comments submitted in response to this action must submit a self-addressed, stamped postcard on which the following statement is made: ''Comments to Docket Number 2001–NM–180–AD.'' The postcard will be date stamped and returned to the commenter.

Availability of NPRMs

Any person may obtain a copy of this NPRM by submitting a request to the FAA, Transport Airplane Directorate, ANM–114, Attention: Rules Docket No. 2001–NM–180–AD, 1601 Lind Avenue, SW., Renton, Washington 98055–4056.

Discussion

The FAA has received a report of five corroded and broken bolts common to two of the latch fittings for the main deck side cargo door on a Boeing Model 747–300 series airplane. The affected bolts are made from H–11 steel, a material that is susceptible to corrosion and subsequent stress corrosion cracking. Broken H–11 steel bolts in the latch fittings of the cargo door could reduce the capability of the door latch to keep the door closed. This condition, if not corrected, could result in loss of the cargo door and consequent rapid depressurization of the airplane.

The same H–11 steel bolts used in the latch fittings of the main deck side cargo door of Boeing Model 747–300 series airplanes are also used in the latch fittings of the main deck side cargo door, nose cargo door, and the forward and aft lower lobe cargo doors on certain Boeing Model 747–100, 747–100B, 747–100B SUD, 747–200B, 747–200C, 747–200F, 747–400, 747SR, and 747SP series airplanes. Therefore, the subject doors on all of these airplane models may be subject to the same unsafe condition.

Explanation of Relevant Service Information

We have reviewed and approved Boeing Alert Service Bulletin 747–53A2464, Revision 1, dated August 30, 2001. That service bulletin describes procedures for a one-time inspection to identify all H–11 steel bolts installed in the latch fittings of the main deck side cargo door, nose cargo door, and the forward and aft lower lobe cargo doors. The inspection procedures include

checking the bolt part number, which is stamped on the bolt head; or using a magnet to verify that the bolt is made of steel. The service bulletin also describes procedures for repetitive ultrasonic inspections for cracked or broken H–11 steel bolts, and replacement of H–11 steel bolts with Inconel bolts. The procedures for replacement of H–11 steel bolts involve performing a detailed inspection of the bolt hole for corrosion; oversizing the bolt hole to remove any corrosion; installing a new bolt, nut, and washers; and applying sealant. Accomplishment of the actions specified in the service bulletin is intended to adequately address the identified unsafe condition.

Other Relevant Rulemaking

Boeing Alert Service Bulletin 747–53A2464, Revision 1, specifies that the actions in Boeing Alert Service Bulletin 747–52A2167 must have been accomplished previously or must be accomplished concurrently. The FAA has previously issued AD 80–14–11, amendment 39–3831. That AD applies to all Model 747 series airplanes equipped with nose cargo doors, and requires, before further flight (as of July 15, 1980, the effective date of that AD), an inspection for loose or missing bolts of the portal latch fittings of the nose cargo door, and corrective actions if necessary, per Boeing Alert Service Bulletin 747–52A2167, Revision 1, dated March 28, 1980. Because the initial compliance time of AD 80–14–11 has long passed, this AD does not specify a requirement for accomplishing that service bulletin.

Explanation of Requirements of Proposed AD

Since an unsafe condition has been identified that is likely to exist or develop on other products of this same type design, the proposed AD would require accomplishment of the actions specified in Boeing Alert Service Bulletin 747–53A2464, Revision 1, except as discussed below. The actions would be required to be accomplished in accordance with the service bulletin described previously.

Differences Between This Proposed AD and Boeing Alert Service Bulletin 747–53A2464, Revision 1

The service bulletin does not specify the type of inspection necessary to identify H–11 steel bolts or to find corrosion during accomplishment of the replacement of H–11 bolts with improved bolts. For the purposes of this proposed AD, we have determined that the procedures in the service bulletin constitute a ''detailed inspection.'' Note 1 of this proposed AD defines such an inspection.

Although the service bulletin specifies that the manufacturer may be contacted for disposition of certain repairs, this proposed AD would require such repairs to be accomplished per a method approved by the FAA, or per data meeting the type certification basis of the airplane approved by a Boeing Company Designated Engineering Representative who has been authorized by the Manager, Seattle Aircraft Certification Office, to make such findings.

The service bulletin specifies that the actions therein should be accomplished prior to or concurrently with the actions in Boeing Service Bulletin 747–52–2197. We have determined that it is not necessary at this time to require accomplishment of Boeing Service Bulletin 747–52–2197. This determination is based on our decision that the inspection of the portal latch fitting of the nose cargo door described in that service bulletin does not address an immediate safety issue. Service history shows that there have been no significant adverse findings since the issuance of that service bulletin; thus, the subject of that service bulletin is not an area of concern.

Changes to 14 CFR Part 39/Effect on the Proposed AD

On July 10, 2002, the FAA issued a new version of 14 CFR part 39 (67 FR 47997, July 22, 2002), which governs the FAA's airworthiness directives system. The regulation now includes material that relates to altered products, special flight permits, and alternative methods of compliance (AMOCs). Because we have now included this material in part 39, only the office authorized to approve AMOCs is identified in this proposed AD.

Change to Labor Rate Estimate

We have reviewed the figures we have used over the past several years to calculate AD costs to operators. To account for various inflationary costs in the airline industry, we find it necessary to increase the labor rate used in these calculations from $60 per work hour to $65 per work hour. The cost impact information, below, reflects this increase in the specified hourly labor rate.

Cost Impact

There are approximately 566 airplanes of the affected design in the worldwide fleet. The FAA estimates that 179 airplanes of U.S. registry would be affected by this proposed AD, that it would take between 2 and 8 work hours per airplane (depending on the airplane's configuration) to accomplish the proposed inspection, and that the average labor rate is $65 per work hour. Based on these figures, the cost impact of the proposed AD on U.S. operators is estimated to be between $130 and $520 per airplane.

The cost impact figures discussed above are based on assumptions that no operator has yet accomplished any of the proposed requirements of this AD action, and that no operator would accomplish those actions in the future if this proposed AD were not adopted. The cost impact figures discussed in AD rulemaking actions represent only the time necessary to perform the specific actions actually required by the AD. These figures typically do not include incidental costs, such as the time required to gain access and close up, planning time, or time necessitated by other administrative actions.

Regulatory Impact

The regulations proposed herein would not have a substantial direct effect on the States, on the relationship between the national Government and the States, or on the distribution of power and responsibilities among the various levels of government. Therefore, it is determined that this proposal would not have federalism implications under Executive Order 13132.

For the reasons discussed above, I certify that this proposed regulation (1) is not a ''significant regulatory action'' under Executive Order 12866; (2) is not a ''significant rule'' under the DOT Regulatory Policies and Procedures (44 FR 11034, February 26, 1979); and (3) if promulgated, will not have a significant economic impact, positive or negative, on a substantial number of small entities under the criteria of the Regulatory Flexibility Act. A copy of the draft regulatory evaluation prepared for this action is contained in the Rules Docket. A copy of it may be obtained by contacting the Rules Docket at the location provided under the caption **ADDRESSES.**

List of Subjects in 14 CFR Part 39

Air transportation, Aircraft, Aviation safety, Safety.

The Proposed Amendment

Accordingly, pursuant to the authority delegated to me by the Administrator, the Federal Aviation Administration proposes to amend part 39 of the Federal Aviation Regulations (14 CFR part 39) as follows:

PART 39—AIRWORTHINESS DIRECTIVES

1. The authority citation for part 39 continues to read as follows:

Authority: 49 U.S.C. 106(g), 40113, 44701.

§ 39.13 [Amended]

2. Section 39.13 is amended by adding the following new airworthiness directive:

Boeing: Docket 2001–NM–180–AD.

Applicability: Model 747–100, 747–100B, 747–100B SUD, 747–200B, 747–200C, 747–200F, 747–300, 747–400, 747SR, and 747SP series airplanes; line numbers 1 through 721 inclusive, 976, and 982; certificated in any category.

Compliance: Required as indicated, unless accomplished previously.

To prevent bolts from breaking in the latch fittings of the cargo doors, which could reduce the capability of the door latch to keep the door closed, and result in loss of a cargo door and consequent rapid depressurization of the airplane, accomplish the following:

Service Bulletin References

(a) The following information pertains to the service bulletin referenced in this AD:

(1) The term ''service bulletin'' as used in this AD, means the Accomplishment Instructions of Boeing Alert Service Bulletin 747–53A2464, Revision 1, dated August 30, 2001.

(2) Although the service bulletin referenced in this AD specifies to submit certain information to the manufacturer, this AD does not include such a requirement.

(3) Although the service bulletin specifies that the actions therein must be accomplished prior to or concurrently with the actions in Boeing Alert Service Bulletin 747–52A2167 and Boeing Service Bulletin 747–52–2197, this AD does not include such a requirement. AD 80–14–11, amendment 39–3831, already requires accomplishment of Boeing Alert Service Bulletin 747–52A2167, Revision 1, dated March 28, 1980.

(4) Inspections and replacements accomplished before the effective date of this AD per Boeing Alert Service Bulletin 747–53A2464, dated March 15, 2001, are considered acceptable for compliance with this AD.

Initial Inspection

(b) Within 1 year after the effective date of this AD: Do a one-time detailed inspection to identify all H–11 steel bolts installed in the latch fittings of the main deck side cargo door, nose cargo door, and the forward and aft lower lobe cargo doors, as applicable. Do the inspection by checking the bolt part number stamped on the bolt head, or verifying the bolt is steel by using a magnet, per the service bulletin. If no H–11 steel bolt is found, no further action is required by this paragraph. If any H–11 steel bolt is found, do the requirements of paragraph (c) of this AD.

Note 1: For the purposes of this AD, a detailed inspection is defined as: ''An intensive visual examination of a specific structural area, system, installation, or assembly to detect damage, failure, or irregularity. Available lighting is normally supplemented with a direct source of good lighting at intensity deemed appropriate by the inspector. Inspection aids such as mirror, magnifying lenses, etc., may be used. Surface cleaning and elaborate access procedures may be required.''

Follow-On Inspections/Corrective Actions

(c) For any H–11 steel bolt found during any inspection required by paragraph (b) of this AD: Before further flight, do an ultrasonic inspection for cracked or broken bolts, or replace the H–11 steel bolt with an Inconel bolt, per the service bulletin. Replace any cracked or broken bolt with an Inconel bolt before further flight per the service bulletin. Repeat the ultrasonic inspection of remaining H–11 steel bolts in the latch fittings of the main deck side cargo door, nose cargo door, and the forward and aft lower lobe cargo doors, at intervals not to exceed 18 months until the terminating action required by paragraph (d) of this AD is done.

Terminating Action

(d) Within 6 years after the effective date of this AD: Replace, with Inconel bolts, all H–11 steel bolts in the latch fittings of the main deck side cargo door, nose cargo door, and the forward and aft lower lobe cargo doors, per the service bulletin. The procedures for this replacement include performing a detailed inspection of the bolt hole for corrosion; oversizing the bolt hole to remove any corrosion; installing a new bolt, nut, and washers; and applying sealant. Such replacement terminates the repetitive inspections required by paragraph (c) of this AD. If corrosion is found and oversizing the bolt hole within the limits specified in the service bulletin is not adequate to remove the corrosion, before further flight, repair in accordance with a method approved by the Manager, Seattle Aircraft Certification Office (ACO), FAA; or per data meeting the type certification basis of the airplane approved by a Boeing Company Designated Engineering Representative who has been authorized by the Manager, Seattle ACO, to make such findings. For a repair method to be approved, the approval must specifically reference this AD.

Parts Installation

(e) As of the effective date of this AD: No person may install, on any airplane, an H–11 steel bolt in the latch fittings of the main deck side cargo door, nose cargo door, or the forward and aft lower lobe cargo doors.

Alternative Methods of Compliance

(f) In accordance with 14 CFR 39.19, the Manager, Seattle ACO, is authorized to approve alternative methods of compliance for this AD.

Issued in Renton, Washington, on August 20, 2003.

Kyle L. Olsen,

Acting Manager, Transport Airplane Directorate, Aircraft Certification Service.

[FR Doc. 03–21873 Filed 8–26–03; 8:45 am]

BILLING CODE 4910–13–P

DEPARTMENT OF TRANSPORTATION

Federal Aviation Administration

14 CFR Part 39

[Docket No. 2003–NM–68–AD]

RIN 2120–AA64

Airworthiness Directives; McDonnell Douglas Model MD–11 Airplanes

AGENCY: Federal Aviation Administration, DOT.

ACTION: Notice of proposed rulemaking (NPRM).

SUMMARY: This document proposes the supersedure of an existing airworthiness directive (AD), applicable to certain McDonnell Douglas Model MD–11 airplanes, that currently requires repetitive general visual inspections of the power feeder cables, terminal strip, fuseholder, and fuses of the galley load control unit (GLCU) within the No. 3 bay electrical power center (EPC) to detect damage; and corrective actions, if necessary. For certain airplanes, this action would require replacement of the electrical wiring of the galley in the EPC. For certain other airplanes, this action would require an inspection to detect damage of the electrical wiring of the galley in the EPC; corrective actions if necessary; modification of the wiring support; and removal of spare fuses; as applicable. These new actions would terminate the repetitive inspection requirements. This action also limits the applicability of the existing AD. This proposal is prompted by the FAA's determination that additional rulemaking is necessary. The actions specified by the proposed AD are intended to prevent chafing damage to the wire assembly, and consequent arcing and smoke and fire in the EPC, and to prevent damage to the wire assembly terminal lugs and overheating of the power feeder cables on the No. 3 and No. 4 GLCU, which could result in smoke and fire in the center accessory compartment.

DATES: Comments must be received by October 14, 2003.

ADDRESSES: Submit comments in triplicate to the Federal Aviation Administration (FAA), Transport Airplane Directorate, ANM–114, Attention: Rules Docket No. 2003–NM–68–AD, 1601 Lind Avenue, SW., Renton, Washington 98055–4056. Comments may be inspected at this location between 9 a.m. and 3 p.m., Monday through Friday, except Federal holidays. Comments may be submitted via fax to (425) 227–1232. Comments may also be sent via the Internet using

the following address: *9-anm-nprmcomment@faa.gov.* Comments sent via fax or the Internet must contain ''Docket No. 2003–NM–68–AD'' in the subject line and need not be submitted in triplicate. Comments sent via the Internet as attached electronic files must be formatted in Microsoft Word 97 or 2000 or ASCII text.

The service information referenced in the proposed rule may be obtained from Boeing Commercial Aircraft Group, Long Beach Division, 3855 Lakewood Boulevard, Long Beach, California 90846, Attention: Data and Service Management, Dept. C1–L5A (D800–0024). This information may be examined at the FAA, Transport Airplane Directorate, 1601 Lind Avenue, SW., Renton, Washington; or at the FAA, Los Angeles Aircraft Certification Office, 3960 Paramount Boulevard, Lakewood, California.

FOR FURTHER INFORMATION CONTACT: Brett Portwood, Aerospace Engineer, Systems and Equipment Branch, ANM–130L, FAA, Los Angeles Aircraft Certification Office, 3960 Paramount Boulevard, Lakewood, California 90712–4137; telephone (562) 627–5350; fax (562) 627–5210.

SUPPLEMENTARY INFORMATION:

Comments Invited

Interested persons are invited to participate in the making of the proposed rule by submitting such written data, views, or arguments as they may desire. Communications shall identify the Rules Docket number and be submitted in triplicate to the address specified above. All communications received on or before the closing date for comments, specified above, will be considered before taking action on the proposed rule. The proposals contained in this action may be changed in light of the comments received.

Submit comments using the following format:

- Organize comments issue-by-issue. For example, discuss a request to change the compliance time and a request to change the service bulletin reference as two separate issues.
- For each issue, state what specific change to the proposed AD is being requested.
- Include justification (*e.g.*, reasons or data) for each request.

Comments are specifically invited on the overall regulatory, economic, environmental, and energy aspects of the proposed rule. All comments submitted will be available, both before and after the closing date for comments, in the Rules Docket for examination by interested persons. A report summarizing each FAA-public contact concerned with the substance of this proposal will be filed in the Rules Docket.

Commenters wishing the FAA to acknowledge receipt of their comments submitted in response to this action must submit a self-addressed, stamped postcard on which the following statement is made: ''Comments to Docket Number 2003–NM–68–AD.'' The postcard will be date stamped and returned to the commenter.

Availability of NPRMs

Any person may obtain a copy of this NPRM by submitting a request to the FAA, Transport Airplane Directorate, ANM–114, Attention: Rules Docket No. 2003–NM–68–AD, 1601 Lind Avenue, SW., Renton, Washington 98055–4056.

Discussion

On August 23, 2002, the FAA issued AD 2002–17–06, amendment 39–12872 (67 FR 55716, August 30, 2002), applicable to certain McDonnell Douglas Model MD–11 airplanes, to supersede AD 2002–14–05, amendment 39–12805 (67 FR 47640, July 19, 2002) to require repetitive general visual inspections of the power feeder cables, terminal strip, fuseholder, and fuses of the galley load control unit (GLCU) within the No. 3 bay electrical power center (EPC) to detect damage; and corrective actions, if necessary. That action was prompted by information from the airplane manufacturer that accomplishment of the replacement required by AD 2002–14–05 could result in additional wire chafing damage in the EPC due to insufficient clearance from structure. The requirements of that AD are intended to prevent such chafing, and consequent arcing and smoke and fire in the EPC, and to prevent damage to the wire assembly terminal lugs and overheating of the power feeder cables on the No. 3 and No. 4 GLCU, which could result in smoke and fire in the center accessory compartment.

Actions Since Issuance of Previous Rule

In the preamble of AD 2002–17–06, the FAA indicated that the actions required by that AD were considered ''interim action,'' and that further rulemaking action would be considered once the airplane manufacturer developed a replacement that addresses the identified unsafe condition and once we approved that replacement. We now have determined that further rulemaking is indeed necessary, and this proposed AD follows from that determination.

Explanation of Relevant Service Information

We have reviewed and approved Revision 02 of Boeing Service Bulletin MD–11–24–184, dated January 7, 2003. Revision 02 of the service bulletin incorporates engineering data released subsequent to Revision 01 of the service bulletin (referenced in AD 2002–17–06 as the appropriate source of service information for the required actions) to provide additional details for ensuring proper wire clamping and support. Revision 02 also removes airplanes from the effectivity. Accomplishment of the actions specified in the service bulletin is intended to adequately address the identified unsafe condition.

Explanation of Requirements of Proposed Rule

Since an unsafe condition has been identified that is likely to exist or develop on other products of this same type design, the proposed AD would supersede AD 2002–17–06 to continue to require repetitive general visual inspections of the power feeder cables, terminal strip, fuseholder, and fuses of the GLCU within the No. 3 bay EPC to detect damage; and corrective actions, if necessary. The proposed AD would also require accomplishment of the actions specified in Revision 02 of the service bulletin described previously, which would terminate the repetitive inspection requirements.

Explanation of Change to Applicability

The applicability of the proposed AD references Boeing Service Bulletin MD11–24–184, Revision 02, dated January 7, 2003, as the appropriate source of service information for determining the affected airplanes (AD 2002–17–06 referenced Revision 01 of the service bulletin). The service bulletin reflects the most current listing of airplanes subject to the requirements of this proposed AD.

Changes to 14 CFR Part 39/Effect on the AD

On July 10, 2002, we issued a new version of 14 CFR part 39 (67 FR 47997, July 22, 2002), which governs our AD system. The regulation now includes material that relates to altered products, special flight permits, and alternative methods of compliance (AMOC). Because we have now included this material in part 39, for purposes of this proposed AD, it is only necessary to identify the office authorized to approved AMOCs and previously approved AMOCs that are acceptable for compliance with the applicable requirements of this proposed AD.

Cost Impact

There are approximately 112 airplanes of the affected design in the worldwide fleet. The FAA estimates that 32 airplanes of U.S. registry would be affected by this proposed AD.

The inspection that is currently required by AD 2002–17–06 and retained in this AD takes approximately 1 work hour per airplane to accomplish, at an average labor rate of $65 per work hour. Based on these figures, the cost impact of the currently required inspection on U.S. operators is estimated to be $2,080, or $65 per airplane, per inspection cycle.

Table 1 of this proposed AD shows the estimated cost impact of the new actions for airplanes affected by this proposed AD. The average labor rate is $65 per work hour. Table 1 is as follows:

TABLE 1.—COST ESTIMATE

Task	For group 1 airplanes			For group 2 airplanes		
	Work hours	Required parts	Cost per airplane	Work hours	Required parts	Cost per airplane
Replacement	18	$15,276	$16,446	19	$17,261	$18,496
Task	**Group 3 airplanes**			**For group 4 airplanes**		
	Work hours	Required parts	Cost per airplane	Work hours	Required parts	Cost per airplane
Inspection	1	None	$65	1	None	$65
Modification	2	$190	$320	1	$9	$74

The cost impact figures discussed above are based on assumptions that no operator has yet accomplished any of the current or proposed requirements of this AD action, and that no operator would accomplish those actions in the future if this AD were not adopted. The cost impact figures discussed in AD rulemaking actions represent only the time necessary to perform the specific actions actually required by the AD. These figures typically do not include incidental costs, such as the time required to gain access and close up, planning time, or time necessitated by other administrative actions. The manufacturer may cover the cost of replacement parts associated with this proposed AD, subject to warranty conditions. Manufacturer warranty remedies may also be available for labor costs associated with this proposed AD. As a result, the costs attributable to the proposed AD may be less than stated above.

Regulatory Impact

The regulations proposed herein would not have a substantial direct effect on the States, on the relationship between the national Government and the States, or on the distribution of power and responsibilities among the various levels of government. Therefore, it is determined that this proposal would not have federalism implications under Executive Order 13132.

For the reasons discussed above, I certify that this proposed regulation (1) is not a ''significant regulatory action'' under Executive Order 12866; (2) is not a ''significant rule'' under the DOT Regulatory Policies and Procedures (44 FR 11034, February 26, 1979); and (3) if promulgated, will not have a significant economic impact, positive or negative, on a substantial number of small entities under the criteria of the Regulatory Flexibility Act. A copy of the draft regulatory evaluation prepared for this action is contained in the Rules Docket. A copy of it may be obtained by contacting the Rules Docket at the location provided under the caption **ADDRESSES.**

List of Subjects in 14 CFR Part 39

Air transportation, Aircraft, Aviation safety, Safety.

The Proposed Amendment

Accordingly, pursuant to the authority delegated to me by the Administrator, the Federal Aviation Administration proposes to amend part 39 of the Federal Aviation Regulations (14 CFR part 39) as follows:

PART 39—AIRWORTHINESS DIRECTIVES

1. The authority citation for part 39 continues to read as follows:

Authority: 49 U.S.C. 106(g), 40113, 44701.

§ 39.13 [Amended]

2. Section 39.13 is amended by removing amendment 39–12872 (67 FR 55716, August 30, 2002), and by adding a new airworthiness directive (AD), to read as follows:

McDonnell Douglas: Docket 2003–NM–68–AD. Supersedes AD 2002–17–06, Amendment 39–12872.

Applicability: Model MD–11 airplanes, as listed in Boeing Service Bulletin MD11–24–184, Revision 02, dated January 7, 2003; certificated in any category.

Compliance: Required as indicated, unless accomplished previously.

To prevent chafing damage to the wire assembly, and consequent arcing and smoke and fire in the electrical power center (EPC), and to prevent damage to the wire assembly terminal lugs and overheating of the power feeder cables on the No. 3 and No. 4 galley load control unit (GLCU), which could result in smoke and fire in the center accessory compartment; accomplish the following:

Certain Requirements of AD 2002–17–06, Amendment 39–12872

Initial Inspection

(a) Do a general visual inspection of the power feeder cables, terminal strip, fuseholder, and fuses of the GLCU within the No. 3 bay EPC to detect damage (*i.e.*, discoloration of affected parts or loose attachments), per McDonnell Douglas Alert Service Bulletin MD11–24A160, dated August 30, 1999; or Revision 01, dated November 11, 1999; at the applicable time specified in paragraph (a)(1) or (a)(2) of this AD.

(1) For airplanes on which the replacement required by paragraph (c) of AD 2002–14–05, amendment 39–12805, has been done: Inspect within 60 days after September 16, 2002 (the effective date AD 2002–17–06, amendment 39–12872).

(2) For airplanes on which the replacement required by paragraph (c) of AD 2002–14–05 has not been done: Inspect within 600 flight hours from the last inspection required by AD 2002–14–05, or within 60 days after September 16, 2002, whichever occurs later.

Note: For the purposes of this AD, a general visual inspection is defined as: ''A visual examination of an interior or exterior area, installation, or assembly to detect obvious damage, failure, or irregularity. This level of inspection is made from within touching distance unless otherwise specified. A mirror may be necessary to enhance visual access to all exposed surfaces in the inspection area. This level of inspection is

made under normally available lighting conditions such as daylight, hangar lighting, flashlight, or droplight and may require removal or opening of access panels or doors. Stands, ladders, or platforms may be required to gain proximity to the area being checked.''

No Damage Detected: Repetitive Inspections

(b) If no damage is detected during any inspection required by paragraph (a) of this AD, repeat the general visual inspection every 600 flight hours.

Damage Detected: Replacement and Repetitive Inspections

(c) If any damage is detected during any inspection required by paragraph (a) of this AD, before further flight, replace the power feeder cables, fuseholder, and/or fuses, as applicable, with new parts, per McDonnell Douglas Alert Service Bulletin MD11–24A160, dated August 30, 1999; or Revision 01, dated November 11, 1999. Repeat the general visual inspection every 600 flight hours.

New Requirements of This AD

Group 1 and Group 2 Airplanes: Replacement of Electrical Wiring

(d) For Group 1 and Group 2 airplanes identified in Boeing Service Bulletin MD11–24–184, Revision 02, dated January 7, 2003: Within 12 months after the effective date of this AD, replace the electrical wiring of the galley in the EPC in bays 1, 2, and 3, per the service bulletin. Accomplishment of the replacement terminates the requirements of paragraphs (a) through (c) of this AD.

Group 3 and Group 4 Airplanes: Inspection for Damage, Modification of Wiring Support, Removal of Fuses; and Corrective Action; As Applicable

(e) For Group 3 and Group 4 airplanes identified in Boeing Service Bulletin MD11–24–184, Revision 02, dated January 7, 2003: Within 12 months after the effective date of this AD, do the actions specified in paragraphs (e)(1), (e)(2), and (e)(3) of this AD per the service bulletin. Accomplishment of the applicable actions in those paragraphs terminates the requirements of paragraphs (a) through (c) of this AD.

(1) Do a general visual inspection to detect damage of the electrical wiring of the galley in the EPC in bays 1, 2, and 3. If any damage is detected, before further flight, repair or replace damaged wiring with new or serviceable wiring per the service bulletin.

(2) Modify wiring support in bay 1.

(3) Remove spare fuses and modify wiring support in bays 2 and 3.

Alternative Methods of Compliance

(f)(1) In accordance with 14 CFR 39.19, the Manager, Los Angeles Aircraft Certification Office (ACO), FAA, is authorized to approve alternative methods of compliance for this AD.

(2) Alternative methods of compliance, approved previously per AD 2002–17–06, amendment 39–12872, are approved as alternative methods of compliance with paragraphs (a) through (c) of this AD.

Issued in Renton, Washington, on August 20, 2003.

Kyle L. Olsen,

Acting Manager, Transport Airplane Directorate, Aircraft Certification Service.

[FR Doc. 03–21872 Filed 8–26–03; 8:45 am]

BILLING CODE 4910–13–P

DEPARTMENT OF THE INTERIOR

National Park Service

36 CFR Part 7

RIN 1024–AD11

Special Regulations; Areas of the National Park System

AGENCY: National Park Service, Interior.

ACTION: Proposed rule.

SUMMARY: The National Park Service is proposing this rule to more effectively manage winter visitation and recreational use in Yellowstone and Grand Teton National Parks and the John D. Rockefeller, Jr., Memorial Parkway. This proposed rule is in conjunction with the Winter Use Plans Final Environmental Impact Statement and the Final Supplemental Environmental Impact Statement and is necessary to mitigate impacts resulting from oversnow motorized recreation in the parks and to implement the conditional decisions made in the Record of Decision of March 25, 2003. The proposal utilizes an adaptive management strategy and, in order to minimize impacts, requires, among other things, that most recreational snowmobiles and snowcoaches operating in the parks meet certain air and sound requirements, most snowmobiles be accompanied by a trained guide, and establishes daily entry limits on the numbers of snowmobiles that may enter the parks. Cross-country routes will continue to remain closed to oversnow motorized vehicles.

DATES: Comments must be received by October 14, 2003.

ADDRESSES: Comments may be sent to Yellowstone National Park, Planning Office, PO Box 168, Yellowstone NP, WY 82190. Comments may also be submitted online at *http://www.nps.gov/yell/rule.*

FOR FURTHER INFORMATION CONTACT: John Lacklin, Planning Office, Yellowstone National Park, 307–344–2021 or at the address listed in the **ADDRESSES** section.

SUPPLEMENTARY INFORMATION: The National Park Service (NPS) has been managing winter use issues in Yellowstone National Park (YNP), Grand Teton National Park (GTNP), and the John D. Rockefeller, Jr., Memorial Parkway (the Parkway) for several decades. In 1997 the Fund for Animals and others filed suit, alleging that the NPS failed to: Consult with the U.S. Fish and Wildlife Service on impacts of winter use on threatened and endangered species; prepare an EIS concerning winter use; and evaluate the effects of trail grooming on wildlife and other park resources. The suit was resolved with a settlement agreement in October 1997 which, among other things, required the NPS to prepare a new winter use plan for the three park units. On October 10, 2000, a Winter Use Plans Final Environmental Impact Statement (FEIS) was published for YNP, GTNP, and the Parkway. A Record of Decision (ROD) was signed by Intermountain Regional Director Karen Wade on November 22, 2000, and subsequently distributed to interested and affected parties. The ROD selected FEIS Alternative G, which eliminated both snowmobile and snowplane use from the parks by the winter of 2003–2004, and provided access via an NPS-managed, mass-transit snowcoach system. This decision was based on a finding that the snowmobile and snowplane use existing at that time, and the snowmobile use analyzed in the FEIS alternatives, impaired park resources and values, thus violating the statutory mandate of the NPS.

Implementing aspects of this decision required a special regulation for each park unit in question. Following publication of a proposed rule and the subsequent public comment period, a final rule was published in the **Federal Register** on January 22, 2001 (66 FR 7260). The rule became effective on April 22, 2001.

On December 6, 2000, the Secretary of the Interior, the Director of the National Park Service and others in the Department of the Interior and the NPS were named as defendants in a lawsuit brought by the International Snowmobile Manufacturers' Association and several groups and individuals. The State of Wyoming subsequently intervened on behalf of the plaintiffs. Following promulgation of final regulations, the original complaint was amended to also challenge the regulations. The lawsuit asked for the decision, as reflected in the ROD, to be set aside. The lawsuit alleged that NPS

failed to give legally mandated consideration to all of the alternatives, made political decisions outside the public process, and, contradictory to evidence and data, failed to give the public appropriate notice and participation, failed to adequately consider and use the proposals and expertise of the cooperating agencies, failed to properly interpret and implement the parks' purpose, discriminated against disabled visitors, and improperly adopted implementing regulations. A procedural settlement was reached on June 29, 2001, under which, NPS prepared a Supplemental Environmental Impact Statement (SEIS). In accordance with the settlement, the SEIS incorporated ''any significant new or additional information or data submitted with respect to a winter use plan.'' Additionally, the NPS provided the opportunity for additional public participation in furtherance of the purposes of NEPA. A Notice of Intent to prepare a Supplemental Environmental Impact Statement was published in the **Federal Register** on July 27, 2001 (66 FR 39197).

A draft SEIS was published on March 29, 2002, and distributed to interested and affected parties. NPS accepted public comments on the draft for 60 days, and 357,405 pieces of correspondence were received. The draft SEIS examined four additional alternatives: Two alternatives to allow some form of snowmobile access to continue; a no-action alternative, which would implement the November 2000 ROD; and another alternative which would implement the no-action alternative one year later to allow additional time for phasing in snowcoach-only travel. The SEIS focused its analysis only on the issues relevant to allowing recreational snowmobile and snowcoach use in the parks. These impact topics included: Air quality and air quality related values, employee health and safety, natural soundscapes, public health and safety, socioeconomics, wildlife—bison and elk, and visitor experience. The SEIS did not include re-evaluating the decision to ban snowplane use on Jackson Lake because this had not been an issue in the lawsuit, and was not an aspect of the resulting settlement.

On November 18, 2002, the NPS published a final rule (67 FR 69473) based on the FEIS, which generally postponed for one year implementation of the phase-out of snowmobiles in the parks under the January 2001 regulation. This rule allowed for additional time to plan and implement the NPS-managed mass-transit, snowcoach-only system outlined in the FEIS as well as time for completion of the SEIS. The rule delayed the implementation of the daily entry limits on snowmobiles until the winter of 2003–2004 and the complete prohibition on snowmobiles until 2004–2005. The transitional requirement under the 2001 regulation that snowmobile parties use an NPS-permitted guide was also delayed until the 2003–2004 winter use season.

Other provisions under the January 2001 regulation concerning licensing requirements, limits on hours of operation, and the ban on snowplane use remained effective for the winter use season of 2002–2003.

The Notice of Availability for the final SEIS was published on February 24, 2003 (68 FR 8618). The final SEIS included a new alternative, alternative 4, consisting of elements which fell within the scope of the analyses contained in the Draft SEIS and which was identified as the preferred alternative. In addition, the final SEIS included changes to the alternatives, changes in modeling assumptions and analysis, and it incorporated additional new information. Intermountain Regional Director Karen Wade signed a Record of Decision for the SEIS, which became effective on March 25, 2003. The ROD selected Final SEIS alternative 4 for implementation, and it enumerated additional modifications to that alternative. The final SEIS and ROD found that implementation of final SEIS alternatives 1a, 1b, 3, or 4 would not be likely to impair park resources or values resulting from motorized oversnow recreation. Promulgation of the regulations proposed in this rule is necessary to implement the March 25, 2003, ROD. Absent the promulgation of such new regulations, the existing regulations reducing the numbers of snowmobiles that may be used in the parks during the winter of 2003–2004, but without air and sound requirements, will continue to apply.

Park Resource Issues

As disclosed in the FEIS and SEIS, the NPS is concerned about impacts to park resources and values resulting from the use of motorized oversnow vehicles, including both snowcoaches and snowmobiles. These impacts are summarized below. Additional information is available in the SEIS and FEIS, available online at: *http://www.nps.gov/grte/winteruse/intro.htm* and *http://www.nps.gov/yell/technical/planning/winteruse/plan/index.htm* respectively.

Air Quality and Air Quality Related Values

Over the past 10 years, increases in the number of visitors using snowmobiles in YNP and GTNP have intensified concerns regarding localized air pollution and its effects on the health of park employees, visitors, and operators and riders of snowmobiles. Although NPS has not documented violations of federal or state ambient air quality standards, these standards have been approached, especially on days when atmospheric conditions produce little air movement. In both cases the NPS is relying on EPA approved methodologies and equipment for carbon monoxide testing at a station operated by the State of Montana and located near the West Entrance to Yellowstone. Two-stroke snowmobile engines typically produce relatively high amounts of carbon monoxide, particulate matter, and volatile organic compounds. New commercially available snowmobile engine technology, especially certain four-stroke snowmobiles, reduce carbon monoxide emissions by as much as 85% and hydrocarbons by 95–98%, relative to the EPA's baseline assumptions about current average two-stroke snowmobile emissions.

Employee and Visitor Health and Safety

Both parks employees and visitors are at times exposed to the hazards of loud sounds, exhaust emissions, and naturally occurring avalanches. Significant levels of carbon monoxide, particulate matter, and other toxic air pollutants have been found near the West Entrance to YNP. Complaints of nausea, dizziness, headaches, sore throats, eye irritation, light-headedness, and lethargy are frequent among employees who work at the West Entrance and others who work within heavily used travel corridors. We have involved OSHA in a partnership with the NPS to help us proactively mitigate concerns about employee health and safety. Through this partnership, OSHA measured exposures in several workplace environments in February 2000, finding high levels of noise, carbon monoxide, benzene, formaldehyde, and severe vibration to employees riding snowmobiles during the performance of their work duties. In addition, OSHA found that an employee working primarily outside the fee kiosk at the West Entrance was over-exposed to noise due to snowmobiles, and that a ranger conducting a normal snowmobile patrol operations was over-exposed to noise at a level of 93 decibels. To address these issues in part,

NPS issues appropriate personal protective equipment, such as earplugs, to employees to minimize their exposure to workplace hazards. We are also in the process of re-designing the West Entrance kiosk to minimize noise and air pollution exposure to employees. The NPS has also established the off-site sale of winter entrance passes to further reduce snowmobile congestion, and subsequent employee exposure to snowmobile emissions. The measures contained in the proposed rule would further mitigate these impacts.

Natural Soundscapes

Natural soundscapes are the unimpaired sounds of nature, and are among the intrinsic elements of the environment that are associated both with the purpose of a park and with its natural ecological functioning. Human-generated noise in the winter includes that from snowmobiles, snowcoaches, and wheeled vehicles. Of particular concern to NPS is the impact of noise generated by humans in travel corridors or staging areas in developed areas that carries into backcountry areas, where visitors expect to hear only the natural soundscape. The majority of areas visited by individuals seeking solitude and quiet lie within close proximity to travel corridors and developed areas because other, more remote, areas of the park are not as easily accessible to the average visitor.

Visitor Experience

In YNP and GTNP, an average of 75 percent of winter visitors ride snowmobiles, 12 percent ride in snowcoaches, 20 percent use cross-country skis, 2 percent use snowshoes and 22 percent drive automobiles. These figures exceed 100 percent because some visitors engage in more than one activity. Visitors come to the parks seeking a winter recreation experience and surveys have shown the primary reasons people visit is to view natural scenery and wildlife. In surveys, visitors have also indicated that experiencing ''tranquility,'' ''peace and quiet,'' and ''getting away from crowds,'' are important components of their visit. However, there are gaps between these characteristics and visitors' satisfaction with them based on visitor surveys. For instance, visitors rated ''experiencing the tranquility'' as the sixth most important component of their visit, while their satisfaction with that characteristic was 18th. Similarly, ''experience peace and quiet'' was rated 14th in importance and 25th in satisfaction. ''Get away from crowds'' had the largest gap: it was the 17th in importance and 40th in satisfaction. This indicates that visitors feel that the values of tranquility, peace and quiet, and solitude are important and expected, but that they are often dissatisfied with their actual experience. The quality of the groomed surface is also an important indicator of visitor satisfaction with oversnow travel in Yellowstone. As roads are traveled by snowmobiles and snowcoaches they can develop bumps, also called moguls. On warm days with heavy snowmobile traffic, the road surface can become so deeply moguled as to render it unsafe for travel. Roads are groomed throughout the week, some on a daily basis, to mitigate this issue.

Wildlife

Wintering wildlife in YNP and GTNP can be challenged for survival due to high snow depths, cold temperatures, and lack of available forage due to deep snow. Wildlife, especially bison and elk, are frequently encountered by travelers along park roadways. Scientific studies, case incident reports, and the experience of park staff indicate that disturbance occurs to wildlife due to some motorized oversnow recreation. This disturbance could come from a visitor, concessioner, or administrative use of snowmobiles or snowcoaches. Additionally, wildlife disturbance and harassment occurs from contact with some cross-country skiers and snowshoers, both on the roadway and in the backcountry. In spite of these contacts, there is not evidence that winter recreation is clearly responsible for any long-term adverse consequences to ungulate populations, including bison and elk. Currently both of these species are at sound population levels.

Impairment to Park Resources and Values

In managing units of the National Park System, the NPS may allow activities that have both beneficial and adverse impacts on park resources and values. However, by the provisions of the laws governing the NPS, the NPS is prohibited from taking or authorizing any action that would result in adverse impacts so significant that they would, or are likely to, impair park resources and values. An impact would be more likely to constitute impairment to the extent that it affects a resource or value whose conservation is: (1) Necessary to fulfill specific purposes identified in the establishing legislation or proclamation of the park; (2) key to the natural or cultural integrity of the park or to opportunities for enjoyment of the park; or (3) identified as a goal in the park's general management plan or other relevant NPS planning documents.

The FEIS ROD, dated November 22, 2000, concluded that, of the seven alternatives evaluated in the FEIS, only one (alternative G), which called for a phase-out of snowmobile use in the parks, did not exceed a level of impairment. This was the basis for selecting this alternative, as described in the rationale for the decision in the November 2000 ROD. In all other FEIS alternatives, the existing snowmobile use in YNP was found to impair air quality, wildlife, the natural soundscape, and opportunities for the enjoyment of the park by visitors. In GTNP, impairment to the natural soundscape and opportunities for enjoyment of the park was found to result from the impacts of snowmobile and snowplane use. In the Parkway, impairment was found to result from snowmobile use on air quality, the natural soundscape, and opportunities for enjoyment of the park. These findings were made for all alternatives with snowmobile use, including those that would have required phased-in use of cleaner and quieter snowmobiles in accordance with set objectives for air and sound emissions. It was determined that there was no way to mitigate the impairment short of reducing the amount of use as determined by an effective carrying capacity analysis, or by imposing a suitable limit unsupported by such an analysis.

The final rule implementing FEIS alternative G, published in the **Federal Register** on January 22, 2001, recognized that, ''achieving compliance with the applicable legal requirements while still allowing snowmobile use would require very strict limits on the numbers of both snowmobile and snowcoaches.'' Thus, through appropriate management actions, the January 2001 rule recognized that some snowmobile and snowcoach use could possibly be accommodated in the parks without resulting in an impairment to park resources and values.

Final SEIS alternative 4, with limited modifications, was selected in the March 25, 2003, ROD for implementation, and will be implemented through this proposed rule. NPS believes that this alternative would not impair park resources or values when fully implemented for several reasons. Fundamental to this alternative is an adaptive management and monitoring strategy, which allows park managers to modify use numbers or take other actions if thresholds related to noise, air quality, wildlife, employee and visitor health and safety, and visitor experience are exceeded.

This alternative implements significant daily entry limits, which will result in fewer conflicts with wildlife, fewer air and sound emissions, and improved road conditions. Most snowmobilers entering the parks will be accompanied by a trained guide, which will reduce conflicts with wildlife and address concerns about safety. In addition, most snowmobiles and snowcoaches in the parks would be required to comply with air and sound requirements. For convenience, the snowmobile models that achieve those air and sound requirements are referred to as the best available technology (BAT). Use of BAT snowmobiles is expected to reduce the noise pollution and significantly reduce the amount of air pollution generated.

At the time of the November 2000 ROD, there were no current means of mitigation that would assure impacts to air quality and the natural soundscapes resulting from unregulated recreational snowmobile use could be reduced, predictably and soon, to a level that would not generally impair these resources and values. Cleaner snowmobiles were not commercially available at that time, nor was mass production of such machines imminent. Today, this technology has changed dramatically and is available to the public. Some four-stroke snowmobiles are substantially cleaner than standard two-stroke machines and are capable of reducing hydrocarbon emissions by up to 95% and carbon monoxide emissions by up to 85%. In addition, some four-stroke snowmobiles are quieter than standard two-stroke machines, testing at approximately 73 dB(A) versus 75–78 dB(A) for two-strokes.

This decision also reflects a commitment to provide protection of park resources and values. The decision allows appropriate levels of visitor use while recognizing that winter in YNP, GTNP, and the Parkway is a unique experience not duplicated on other public lands. Such uses are in a manner that ensures protection of park resources and values. Finally, the decision reflects the Service's concern for working closely and cooperatively with gateway communities. Within the limits authorized by the Organic Act and other legal authorities applicable to winter use in the parks, for any park's programs to be truly successful, a strong collaborative relationship with gateway community partners is essential. This relationship has been demonstrated in our planning process both by the role of these communities through the states and counties as cooperating agencies and by the March 2003 ROD.

Furthermore, the applicable laws and policies governing the NPS afford park managers broad discretion. We are led to the inevitable conclusion that there is no single decision with respect to snowmobiles mandated by these laws and policies. This is reflected by the ROD from November 2000, which would have phased out the recreational use of snowmobiles in these parks over several years, and the March 2003 ROD, which permits recreational snowmobile use under strict numerical and technological limits, with adaptive management, to respond to future impacts from motorized winter use in these parks. The strict requirements set forth in this proposed rule will allow for a reasonable level of recreational snowmobile use to continue in a manner which protects, not impairs, park resources and values.

Entrance Fees and Reservations

Because of the absence of plowed roads and the limited facilities which are open within the parks in the winter, entrance to the parks via snowmobile or snowcoach is fundamentally different than visits during other seasons. As a practical matter, this proposed rule will effectively require that visitors wishing to enter Yellowstone via a snowmobile or snowcoach have an advance reservation. Therefore, entrance fees to Yellowstone will parallel this reservation system by becoming a daily entry fee system. Snowmobilers or snowcoach passengers wishing to enter the park over multiple days would still be able to purchase a multiple-day entry pass; however, visitors only entering the park on one day would now have the option of purchasing a one-day pass. In the past, the NPS has sold snowmobile entrance passes that allowed entry for seven consecutive days, however we wish to avoid the potential confusion to a visitor who might pay for a seven-day snowmobile entry fee, but only have reservations to actually enter the park for one day. We will be modifying our winter entry fees to reflect this distinction through a separate administrative process.

Description of the Proposed Rule

Many of the regulations regarding over-snow transportation have been in existence at the park under the authority of 36 CFR Part 7 or 36 CFR 1.5. Regulations such as the operating conditions, designated routes, and restricted hours of operation have been in effect and enforced by NPS employees for several years. They are included in this rule, with only slight modifications, to remind the public of all the regulations that apply to over-snow transportation for each park area. New regulations such as alcohol limits, BAT requirements, daily entry limits and guiding requirements are new and are explained in detail in this proposed rule.

The NPS is proposing an adaptive management and monitoring strategy to mitigate the impacts described previously on air quality, employee and visitor health and safety, natural soundscapes, wildlife, and visitor experience, while allowing snowmobile access on all major oversnow routes in Yellowstone and Grand Teton National Parks and the John D. Rockefeller, Jr., Memorial Parkway. The NPS will continuously adapt these limits to protect park resources and values while allowing for the enjoyment of those resources by the American people. These preliminary limits are based on the best information available to the NPS, as described in the FSEIS. The NPS welcomes new information and data pertinent to its management of park resources and visitor use and will incorporate new information in the final rule and future adaptive management decisions as appropriate. In order to prevent impairment to park resources and values, this strategy requires implementation of the following components:

Monitoring and Adaptive Management

Adaptive management allows park managers to take management actions as new information is collected about a specific resource or issue. The NPS will conduct monitoring of park resources and values, including air quality, employee and visitor health and safety, natural soundscapes, wildlife, and visitor experience. If analysis of the monitoring data identifies unacceptable impacts to park resources and values are occurring, management actions will be taken to remedy the problem. Examples of initial methods, indicators, thresholds, and management actions are identified in Attachment A of the March 25, 2003, Record of Decision. Attachment A is available online at *http://www.nps.gov/grte/winteruse/winteruse.htm*. These management actions could include, but are not limited to, adjustment of daily entry limits, adjustment of BAT requirements, closure of road segments, changes in the commercial to non-commercial guiding ratio, establishment of timed-entries, increased road grooming, and others.

To allow for management flexibility (the premise of adaptive management) these proposed rules would authorize the Superintendent to make changes in winter use management, with advance public notice. For example, if improved snowmobile technologies became commercially available, the

Superintendent could further reduce the amount of air and sound emissions in the park units by requiring that cleaner and quieter machines be used. In such a case the parks generally would not initiate formal rulemaking or publish a notice in the **Federal Register** to effect changes in winter use management. Instead these changes would be authorized through these proposed rules. None of the actions in this proposed rule are intended to preclude road or other closures for safety, resource protection, or other reasons as identified in 36 CFR 1.5.

If monitoring or adaptive management leads park managers to take management actions, the Superintendent will provide appropriate public notice in accordance with 36 CFR 1.7(a). To provide the public with sufficient notice, changes in winter management of the parks would ordinarily be made by July 1 and implemented in a future winter season. The Superintendent will also report periodically to the public on monitoring results and justify any changes in winter use management. These changes would be based on analyses of the data collected from the parks' monitoring program.

We are interested in soliciting comments from the public on other potential strategies and authorities to implement adaptive management, which allow park managers similar flexibility as the process described above. We recognize that adaptive management has only been formally used in a relatively few national parks, although parks have informally used it in the past.

Best Available Technology

In recent years, some snowmobile manufacturers have made significant improvements at reducing air and sound emissions in some snowmobile models. The 2002 Arctic Cat 4-Stroke Touring and the 2002 Polaris Frontier four-stroke represent the cleanest and quietest commercially available snowmobiles for which test data is available to the NPS. These snowmobiles are capable of reducing hydrocarbon emissions by 95–98% and carbon monoxide by 85%, as compared to a standard two-stroke snowmobile. In addition, four-stroke snowmobiles typically perform at full throttle at sound levels below 73 dB as measured on the A-weighted scale, as compared to two-stroke snowmobiles, which typically perform at 75–78 dB(A). Four-stroke snowmobiles also produce more even frequency spectra and are less audible over a distance, relative to two-stroke snowmobiles.

Therefore, to mitigate impacts to air quality and the natural soundscape, NPS is proposing to require that initially, most recreational snowmobiles operating in the parks, and by the winter season of 2004–2005 all recreational snowmobiles in Yellowstone, be BAT. Initially BAT would be set at any snowmobile that can achieve a 90% reduction in hydrocarbons and a 70% reduction in carbon monoxide from EPA's baseline assumptions for uncontrolled snowmobiles as published in the **Federal Register** on November 8, 2002 (67 FR 68241). The initial requirement is set lower than the test results from the 2002 machines to allow more than one manufacturer the opportunity to produce snowmobiles that meet the requirements while allowing the NPS to achieve our air quality goals.

Thus, any recreational snowmobile operating in YNP must achieve air emissions below 15 g/kW-hr for hydrocarbons and 120 g/kW-hr for carbon monoxide. Snowmobiles must be tested on a 5-mode engine dynamometer, in accordance with EPA's November 8, 2002, rule (67 FR 28241) with test data and methodology provided to NPS for review. The NPS is relying on the 5-mode engine dynamometer test because it is the standard testing procedure approved by the Environmental Protection Agency and because it was used in determining snowmobile emissions for the SEIS and it would allow for comparisons to be made amongst snowmobiles models. Other test methods could be approved by NPS on a case-by-case basis.

Snowmobiles would also be required to operate at or below 73 dB(A), as measured at full throttle according to Society of Automotive Engineers J192 test procedures. The initial BAT requirement for sound was established by reviewing individual machine results from side-by-side testing performed by the NPS' contractor, Harris Miller Miller & Hanson Inc. (HMMH) and the State of Wyoming's contractor, Jackson Hole Scientific Investigations (JHSI). These separate reports independently concluded that the six four-stroke snowmobiles tested between 69.6 and 77.0 dB(A) using the J192 protocol. On average, the HMMH and JHSI studies measured four-strokes at 73.1 and 72.8 dB(A) at full throttle, respectively. The SAE J192 test also allows for a tolerance of 2 dB(A) over the sound limit to account for variations in weather, snow conditions, and other factors.

Currently, little data exists on snowcoach emissions, with the exception of one laboratory study commissioned by the State of Wyoming which used a chassis dynamometer to measure emissions from one V–10 powered Ford E–350 15-passenger van (Lela, Chad C. and Jeff L. White, 2002). Field conditions in this study could not be replicated accurately in the laboratory because the percent of time a snowcoach operates in open-loop mode (with the throttle wide open, producing higher emissions) versus closed-loop mode (at normal throttle, producing extremely low emissions) is unknown. Running in snow on tracks requires more power than operation with wheels and thus the vehicle may operate in open-loop mode more frequently.

Currently no industry standard air emissions testing procedure exists for snowcoaches that would be cost effective to implement in the field. Due to the cost, it would be impractical to use an engine or chassis dynamometer in the field to determine emissions of individual snowcoaches.

There are approximately 55 snowcoaches currently operating in Yellowstone National Park. Under concessions contracts currently proposed, there could be as many as 69 snowcoaches authorized. Approximately 29 snowcoaches operating in the park were manufactured by Bombardier and were designed specifically for oversnow travel. Those 29 snowcoaches were manufactured prior to 1983 and are referred to as ''historic snowcoaches'' for the purpose of this rulemaking. All other snowcoaches are 12 to 15-passenger vans that have been converted for oversnow travel using tracks and/or skis.

The March 2003 ROD called for snowcoach air emissions to be no greater than 15 g/kW-hr for hydrocarbons and 120 g/kW-hr for carbon monoxide by the winter of 2005–2006. However, we do not believe it is currently feasible to enforce this requirement as there is insufficient information to establish testing procedures.

Therefore, we are proposing to require that all snowcoaches meet the EPA's standards that were in existence at the time the vehicle was manufactured. Most of these vehicles achieve EPA's Tier 1 emissions standards, which were phased-in from 1994–1996. To ensure that vehicles were meeting EPA's emissions standards, we would require that the vehicle's original pollution control equipment had not been modified or tampered with. Snowcoach owners would be required to certify to the NPS and make available for inspection upon NPS'' request, that the vehicle's pollution control equipment is as originally manufactured.

EPA's Tier 1 standards require that emissions from vehicles be extremely clean. In comparison with four-stroke snowmobiles, snowcoaches operating within EPA's Tier 1 standards are cleaner, especially given their ability to carry up to seven times more passengers (Lela and White 2002). In addition, in 2004 EPA will begin phasing-in Tier 2 emissions standards for multi-passenger vans, and will be fully phased-in by 2009. Tier 2 standards will require that vehicles be even cleaner than Tier 1. Tier 2 standards would also significantly reduce the open loop mode of operation. If Tier 2 vehicles are converted to snowcoaches, then the emissions attributable to them would be further reduced in the parks.

If any of the vehicle's pollution control equipment, including the catalytic converter, associated piping, and other related parts that may release CO, HC or PM emissions in the event of mechanical failure or deterioration, had exceeded its useful life as published by the EPA, then the owner would be required to replace it. Generally, useful life for new vehicles (since 1996) is 120,000 miles or 11 years, whichever comes first. NPS is proposing that if a snowcoach owner was required to replace any pollution control equipment under this requirement, the new pollution control equipment would be required to be original equipment, if available from the vehicle's manufacturer, versus after-market equipment. If original equipment is no longer available snowcoach owners could then install after-market equipment. We are proposing that snowcoach owners install original equipment if available because it generally has a longer useful life and may be more efficient in reducing pollutants, although both are certified to the same level of emissions reduction. We are requesting comments on whether original equipment or other, including after market, equipment is more appropriate when replacing the pollution control equipment with respect to emission reduction and cost.

These air emissions requirements would be implemented during the 2005–2006 winter season.

NPS would continue to work with snowcoach owners, researchers, and other experts during the winters of 2003–2004 and 2004–2005 to better understand snowcoach emissions and to determine the most effective field testing methods. We ultimately intend to require that snowcoaches achieve numerical performance-based limits for emissions before being allowed entry into the park. We may propose a special regulation in the future to establish specific numerical performance based air and sound emission requirements for snowcoaches.

For sound emissions, snowcoaches would be required to operate at or below 75 dB by the winter of 2008–2009, as measured at 25 mph on the A-weighted scale at 50 feet. This test would be similar to Society of Automotive Engineers J1161 procedures except that snowcoaches would maintain a speed of 25 mph which is a typical snowcoach operating speed and 10 mph faster than the J1161 procedures prescribe. NPS intends to test and certify individual snowcoaches in a field setting because of the number of different makes, models, and years of manufacture being used in the parks and the fact that sound emissions vary from vehicle to vehicle. We are proposing to allow additional time to phase-in air and sound requirements for snowcoaches because of the substantial investment required to upgrade snowcoach technology and to encourage additional investment in mass transit snowcoaches.

Historic snowcoaches (defined as a Bombardier snowcoach manufactured in 1983 or earlier) would initially be exempt from air and sound requirements; however NPS will work with snowcoach owners to retrofit historic snowcoaches to meet the air and sound requirements. We are initially exempting historic snowcoaches from air and sound requirements to maintain the character of winter motorized oversnow travel. We also believe it is reasonable and prudent to work with outfitters and concessioners to determine how best to upgrade their equipment.

Beginning with the winter season of 2003–2004, all commercially guided snowmobiles operating within YNP would be required to be BAT. Beginning with the winter season of 2004–2005, all snowmobiles would be required to be BAT.

In GTNP and the Parkway, all snowmobiles operating on the Continental Divide Snowmobile Trail (CDST) and Jackson Lake must be BAT starting in 2004–2005. BAT requirements would also apply to all snowmobiles originating at Flagg Ranch and traveling west on the Grassy Lake Road. Snowmobiles originating in the Targhee National Forest and traveling eastbound on the Grassy Lake Road would not be required to utilize BAT; however, these snowmobiles could not travel further than Flagg Ranch. We are allowing this exception because the Grassy Lake Road in the Parkway is approximately 6 miles long, snowmobiles are not required to be BAT on U.S. Forest Service lands, and the NPS wishes to honor the request of the USFS that these visitors be able to access food, fuel, and other amenities available at Flagg Ranch. Any commercially guided snowmobiles authorized to operate in the Parkway or Grand Teton will be required to be BAT beginning with the winter season of 2003–2004.

NPS will annually publish a list of snowmobile makes, models, and year of manufacture that meet BAT requirements. The NPS intends to rely on certified air and sound emissions data from the private sector rather than establish its own independent testing program, which would be cost prohibitive. NPS intends to work cooperatively with the private sector—guides and outfitters as well as manufacturers—in the preparation of such lists. Each snowmobile model would be approved for entry into the parks for six winter seasons after it was first listed. Based on NPS experience, six years represents the typical useful life of a snowmobile, and thus six years provides purchasers with a reasonable length of time where operation is allowed once a particular model is listed as being compliant. Individual snowmobiles modified in such a way as to increase sound and air emissions of HC and CO beyond the proposed emission requirements would be denied entry to the parks. Currently, the NPS has sufficient test data on the 2002 Arctic Cat 4-Stroke and the 2002 Polaris Frontier to determine that they meet the BAT requirements. No other snowmobiles would be allowed entry into the parks unless they were subjected to the testing described above and met the BAT requirements herein proposed.

For both snowcoaches and snowmobiles, it would be the responsibility of the end users, guides and outfitters (or private snowcoach owners to the extent they are permitted for entry into the parks) to ensure that their oversnow vehicles comply with all applicable requirements.

Under the adaptive management framework, BAT requirements could be adjusted annually to protect park resources and values, including air quality, natural soundscapes, wildlife, visitor experience, and employee health and visitor safety. The process for changing air and sound requirements is described previously in ''Monitoring and Adaptive Management.'' When adjusting the BAT requirements, one of the facts the NPS will consider is the best available technology in the snowmobile market. If there is a substantial improvement in the

snowmobile technology with respect to air and sound emissions, the NPS may consider adjusting these limits to reflect the best available technology. Based on technology improvements in the past few years, NPS expects that snowmobile technology will continue to improve, further reducing air and sound emissions. However, if technology worsens, the daily entry limits could be further restricted to protect park resources and values.

The NPS is interested in obtaining public comments on the issue of specifically how compliance with BAT should be determined, and what procedures NPS would use. For instance, we have preliminarily identified at least two methods that we could use to determine if snowmobiles are BAT-compliant. One method would be to average the manufacturer's Official Test Results (OTR). These tests are preformed by manufacturers in order to comply with EPA's snowmobile regulations (67 FR 68241), and reflect the actual emissions of snowmobiles. Another method would be to use the average Family Emissions Limit (FEL), which are the emissions limits that manufacturers certify to EPA for a specific engine class of snowmobiles. FELs will likely be set somewhat higher (*i.e.*, to allow for more emissions) than OTRs to account for variances in production and insure that individual snowmobiles do not exceed the FELs.

The restrictions on air and sound emissions proposed in this rule is not a restriction on what manufacturers may produce but an end-use restriction on which commercially produced snowmobiles and snowcoaches may be used in the parks. The NPS Organic Act (16 U.S.C. 1) authorizes the Secretary of the Interior to ''promote and regulate'' the use of national parks ''by such means and measures as conform to the fundamental purpose of said parks * * * which purpose is to ''conserve the scenery and the natural and historic objects and the wild life therein and to provide for the enjoyment of the same in such manner and by such means as will leave them unimpaired for the enjoyment of future generations.'' Further, the Secretary is expressly authorized by 16 U.S.C. § 3 to ''make and publish such rules and regulations as he may deem necessary or proper for the use and management of the parks * * *.'' This exercise of the NPS Organic Act authority is not an effort by the NPS to regulate manufacturers and is consistent with Sec. 310 of the Clean Air Act.

Since 2001, Yellowstone and Grand Teton National Parks have been converting their own administrative fleet of snowmobiles to four-stroke machines. These machines have proven successful in use throughout the parks. NPS intends to continue to purchase these snowmobiles for most administrative uses. However, we recognize that some administrative applications, such as off-trail boundary patrols outside the park in deep powder, towing heavy equipment or disabled sleds, or law enforcement uses may require additional power beyond that supplied by existing 4-stroke snowmobiles. In these limited cases, NPS may use snowmobiles that exceed BAT requirements proposed in this rule.

Use of Trained Guides

To mitigate impacts to wildlife and visitor and employee safety, all recreational snowmobiles operated in Yellowstone National Park must be accompanied by a trained guide. During the development of the SEIS and the ROD, the NPS was requested to develop an alternative to commercially guided snowmobiles. As a result we are proposing that eighty percent of the authorized daily snowmobile entries through each entrance be allocated to commercially guided tours under concessions contracts similar to those currently operating in the parks. The remaining twenty percent of daily authorized snowmobile entries will be available for non-commercially guided trips that require a trained member of the group to be authorized by NPS to lead a group of snowmobilers. The NPS has set the current 80:20 ratio to allow the public an opportunity to visit the park at their own pace through private groups. This initial ratio is based on an NPS expectation of success in mitigating wildlife impacts through a variety of guiding alternatives. The NPS will analyze how well the non-commercial guide program works to minimize impacts on wildlife and enhance visitor safety, and through the adaptive management process may revise this ratio in future years.

Beginning with the winter season of 2003–2004, eighty percent of daily snowmobile entries through each Yellowstone entrance must be accompanied by a commercial guide. In order to provide adequate time for the development and implementation of the non-commercial guiding program, for the winter 2003–2004 only, non-commercial guides will not be required; however, private snowmobile parties will be required to travel in groups. Beginning with the winter season of 2004–2005, all snowmobiles in YNP must be accompanied by a guide, either through a concession or by an authorized non-commercial guide.

In Grand Teton and the Parkway, all snowmobile parties traveling north from Flagg Ranch must be accompanied by a guide, with the same phase-in as described above for YNP. All other snowmobilers in Grand Teton and the Parkway do not have to be accompanied by a guide. Thus, in the winter of 2003–2004, eighty percent of the authorized entries via the South Gate at YNP are allocated to commercially guided parties, and twenty percent to individuals without guides. The use of guides in Grand Teton and the Parkway is not otherwise required due to the low volume of use, the conditions for access to Jackson Lake for winter fishing, the through road characteristics of the CDST, as well as the inter-agency jurisdiction on the Grassy Lake Road.

Under the adaptive management framework, requirements for use of guides, including the commercial to non-commercial guide ratio, could be adjusted annually to protect park resources and values, including air quality, natural soundscapes, wildlife, visitor experience, and employee health and visitor safety.

Non-commercial guides will be required to successfully complete a training program approved by NPS that would address park rules, safety considerations, and appropriate actions to minimize impacts to wildlife and other park resources. The NPS has not fully developed the training course but will be working with private groups to develop a curriculum and make the training widely available to the public through private businesses by the winter of 2004–2005. The NPS will require individuals seeking a non-commercial guide certification to successfully complete the training course. The training provider will need to define ''successfully'' in order to ensure that the attendee has met the NPS objectives of the course.

Members of non-commercial guide parties may not compensate anyone, either directly or indirectly, for non-commercial guiding services. The NPS intends that the provision for non-commercial guides is to accommodate requests that the public have alternatives to using commercial guiding services, and thus no business transaction of any kind may take place in association with non-commercial guiding services. For example, a non-commercial guide may not provide a guiding service to someone in exchange for his or her employer receiving compensation in order to classify the activity as a non-commercial guiding service.

Commercial guides are also educated in safety, interpretive skills, and

appropriate actions to minimize impacts to resources and other visitors. Commercial guides receive more rigorous training and perform guiding duties, usually, as employees of a business. A commercial guide is defined as a guide who is hired by park visitors for a fee or compensation, as opposed to a non-commercial guide, who may not receive compensation or fees. Any person who guides for a fee or compensation must do so under a contract with the NPS to operate as a business within the boundaries of a park unit. Commercial guides are employed by local businesses. Those jobs are not performed by NPS employees.

Guided groups must contain from 2 to 11 snowmobiles, including the guide's machine. This would apply to commercial and non-commercial groups. Individual snowmobiles may not be operated separately from a group within the park. A minimum group size of two was established to require the public to concentrate snowmobiles together in order to reduce the frequency of wildlife encounters along the roadways. In this respect, guided parties will more closely resemble the ''mass transit'' aspect of snowcoach use. A maximum group size of 11 was established so that no one party would be so large that a single guide could not safely direct and manage all party members.

Except in emergency situations, guided parties must travel together and remain within a maximum distance of one-third mile of the first snowmobile in the group. This will insure that guided parties do not get spread too far out. One-third mile will allow for sufficient and safe spacing between individual snowmobiles within the guided party, allow the guide to maintain control over the group and minimize the impacts on wildlife.

Initial Daily Snowmobile Entry Limits

The number of snowmobiles that could enter the parks each day would be limited under this rule. These limits are intended to mitigate impacts to air quality, employee and visitor health and safety, natural soundscapes, wildlife, and visitor experience, while providing the opportunity to maintain historical levels of visitation to the parks with the use of snowcoaches. Once the daily snowmobile entry limits are reached, the only other means of public motorized access will be through the use of snowcoaches. No limits on snowcoach numbers are intended at this time, but could be considered in the future as part of the adaptive management process. The initial entry limits are identified in Table 1. Use limits identified in Table 1 include guides; thus both commercial and non-commercial guides are counted towards the daily entry limits. The NPS considered suggestions to not count guides themselves within these limits, but believe this suggestion would constitute a de facto increase in use from the levels being authorized. For YNP, the daily entry limits are identified for each entrance; for GTNP and the Parkway, the daily limits apply to total snowmobile use on the road segment.

Those limits are listed in the following table:

TABLE 1.—INITIAL DAILY SNOWMOBILE ENTRY LIMITS

Park entrance/road segment	Number of commercially-guided snowmobile entrance passes	Number of non-commercially guided snowmobile entrance passes [1]	Total number snowmobile entrance passes
YNP—North Entrance	40	10	50
YNP—West Entrance	440	110	550
YNP—South Entrance	200	50	250
YNP—East Entrance	80	20	100
GTNP and the Parkway—Total Use on Continental Divide Snowmobile Trail [3]	N/A	N/A	[2] 75
Parkway—Total Use Grassy Lake Road	N/A	N/A	[2] 75
Jackson Lake	N/A	N/A	[2] 40

[1] In the 2003–2004 winter season only, these entries would be available for unguided parties of 2 to 11 snowmobiles, to allow sufficient time to develop and implement a non-commercial guide training program.
[2] These users do not have to be accompanied by a guide.
[3] The Continental Divide Snowmobile Trail lies within both GTNP and the Parkway. The 75 daily snowmobile use limit applies to total use on this trail in both parks.

These daily entry limits would be implemented beginning with the winter season of 2003–2004. Adaptive management and monitoring programs would be implemented to allow the interim numbers to be assessed annually. The results of the adaptive management program would determine the need for increasing or decreasing snowmobile numbers to ensure adequate protection of park resources and values, including air quality, employee and visitor health and safety, natural soundscapes, wildlife, and visitor experience. For instance, if air quality monitoring, based on EPA protocols, shows that conditions near a park entrance or along a road segment are inconsistent with the goals set forth in the March 2003 ROD, the daily entry limits could be reduced to protect air quality. In addition, should NPS adjust BAT requirements, daily entry limits might also be increased or decreased.

The purpose of these caps is to impose strict limits on the numbers of snowmobiles that may use the parks in order to minimize resulting impacts. Compared to historical use where peak days found as many as 1,700 snowmobiles in the parks, these caps represent a reduction. While the caps allow in theory for some growth in daily average snowmobile use, it is uncertain at best whether the former peak day users who are now foreclosed will shift their snowmobile use to what were the previously less busy days. While NPS does not expect this to result in an actual increase in snowmobile usage from historic levels, the adaptive management process will be used to address impacts not presently foreseen.

The daily snowmobile entry limits were derived based on several factors. First, the daily limits are based on the analysis contained in the SEIS, which concluded that these entry limits, combined with other elements of this rule, would prevent impairment to park resources and values while allowing for an appropriate range of experiences available to park visitors. Second, they approximate at minimum the historic

average daily use at each entrance. At some entrances where park managers believe additional use could be accommodated without unacceptable impacts to park resources or values, the daily limits allow for growth beyond the historic daily averages.

During the winter of 2003–2004, reservations for private, unguided snowmobile parties may be made by contacting Xanterra Parks and Resorts at 307–344–7311. Every snowmobile a group uses in Yellowstone would require a reservation; thus, a group of four people riding double on two snowmobiles would need two reservations each day they snowmobile in the park. Reservations for commercially guided trips may be made by contacting the guide. The NPS is currently soliciting bids for commercially guided snowmobile concessions. Once guides are selected we will post a list of authorized commercial guides on our Web site at *http://www.nps.gov/yell*.

Visitors who go in and out of the park in a single day will be counted against entrance limits only at the initial entrance gate. For instance, a group that enters Yellowstone through the North Entrance, exits the park that afternoon to have lunch in West Yellowstone and re-enters the park through the West Entrance would only count towards the daily limits at the North Entrance.

Visitors who enter the parks through one entrance, exit at another entrance in order to spend that night out of the park, and then re-enter on the following day will be counted towards the daily entry limits on the following day. Snowmobile parties' subsequent entries will count towards the entry limits at whatever entrance station they first entered at the start of their trip. In the March 2003 ROD, NPS did not require that these entries be counted. After further consideration, the NPS believes that counting these entries will simplify management of snowmobile entries and the reservation system, will be less confusing to the public, and will keep the daily level of snowmobile use within the scope of the SEIS analysis.

Non-commercial groups would be required to have obtained by an advance reservation a daily entry pass, for the first entrance they intend to use on the first day of their trip and subsequent entries would be counted against the entrance gate they initially entered the park through. Thus, a non-commercial group entering at the West Entrance and spending the night outside the park would count towards the daily entry limits at the West Entrance each day the snowmobile is in the park, regardless of the entrance through which they actually re-enter.

Commercial groups would be counted each day towards their allocated number of daily entries at their base entrance as specified in their concessions contract. Thus, a commercial group entering at the West Entrance and spending the night outside the park would count against their allocation at their base entrance (West Entrance), not the entrance through which they actually enter on subsequent days.

Visitors by snowmobile spending the night in Yellowstone, such as at Old Faithful or Canyon Yurt Camp, would count towards the entry limit for each day they are in the park. These provisions could be modified through adaptive management.

Initially, snowmobiles rented at Old Faithful by an authorized concessioner will not count against daily entry limits. Currently, approximately 25 snowmobiles are available for rent at Old Faithful, and NPS controls the level of use through the concessions contract. Guiding requirements would apply to these snowmobile rentals. We do not intend for this snowmobile rental operation to substantially increase. This provision could be modified through adaptive management should monitoring detect unacceptable impacts to park resources and values.

NPS Park Passes and Fees

Because of past experiences with large groups on numerous snowmobiles, the NPS wishes to make clear the existing parameters on the use of NPS-issued Park Passes that permit entry into the park for free or at a reduced rate. Existing regulations regarding the various passes issued by the NPS specifically limit the number of people who may gain entrance to the park under a single passport or pass. The intent in the existing regulations is to admit, for free or at a reduced rate, only those persons occupying the same motor vehicle as the pass holder. Those regulations also specifically state that a second vehicle associated with this group but not occupied by the pass holder will be charged at the single-visit rate.

To carry that intent into winter use, the NPS wants to make clear that only the persons riding on the snowmobile with the passport or pass holder and their immediate family (spouse, parents, and children under the age of 21) may enter at the same fee rate as the passport or pass holder. No other associated persons or snowmobiles will be permitted entry at the reduced fee rate.

Lastly, the NPS is concerned about members of the public purchasing entrance reservations and reselling them for a personal profit since there will be a limited number of daily reservations available for non-commercial entrances. Therefore, the NPS is seeking comments on whether to prohibit the reselling of entrance reservations and by what means.

What Terms Do I Need To Know?

The NPS has added definitions for oversnow vehicle and designated oversnow route. Additionally, we have added definitions for commercial and non-commercial guides and have discussed those definitions at length earlier in this proposed rule. For snowmobiles, we are using the definition found at 36 CFR 1.4, as there is no need to alter that definition at this time. For the sake of clarity and ease, we are reiterating that definition again in this section. Earlier rulemakings specific to Yellowstone, Grand Teton and the Parkway referenced ''unplowed roadways'' and that terminology was changed to ''designated oversnow routes'' to more accurately portray the condition of the route being used for oversnow travel. Despite this terminology change, these routes will remain on roads or water surfaces used by motor vehicles and motorboats during other seasons. Previous rulemakings also referred only to snowmobiles or snowcoaches. Since there is a strong likelihood that new forms of machines will be developed that can travel on snow, a broader definition was developed to insure that such new technology remained subject to regulation. When a particular requirement or restriction only applies to a certain type of machine (for example: some concession restrictions only apply to snowcoaches) then the specific machine is stated and only applies to that type of vehicle, not all oversnow vehicles. However, oversnow vehicles that do not meet the strict definition of a snowcoach (*i.e.*, both weight and passenger capacity) would be subject to the same requirements as snowmobiles. The definitions listed under § 7.13(l)(1) will apply to all three parks. These definitions may be further clarified based on changes in technology.

Where Must I Operate My Snowmobile in the Park?

Specific routes are listed where snowmobiles may operate, but this proposed rule also provides latitude for the Superintendent to modify those routes available for use. When determining what routes are available

for use, the Superintendent will use criteria that are the same as those set forth in § 2.18(c), and may also take other issues into consideration including the most direct route of access, weather and snow conditions, the necessity to eliminate congestion, the necessity to improve the circulation of the visitor use patterns in the interest of public safety and protection of park resources. The criteria mentioned above are reiterated in this section since winter use management in these parks will not be specifically subject to § 2.18.

Snowmobiles authorized to operate on the frozen surface of Jackson Lake may gain access to the Lake by trailering their snowmobiles to the parking areas near the designated access points via the plowed roadway. There is no direct access from the CDST to Jackson Lake and use limits established for each area are distinctly separate.

What Other Conditions Apply to the Operation of Oversnow Vehicles?

A similar section existed in previous snowmobile regulations entitled ''What other conditions are placed on snowmobile and snowcoach operations?'' and addressed many of the same issues. A few minor changes were made to those operating requirements, including modifying the operating hours by one hour, limiting idling to 5 minutes at any one time, and no longer allowing operation of a snowmobile by persons holding only a learner's permit. These modifications were made based on experiences over the last few winters with winter use operations and the need to adjust requirements for safety and resource impact considerations.

What Conditions Apply to Alcohol Use While Operating an Oversnow Vehicle?

Although the regulations in 36 CFR 4.23 apply to oversnow vehicles, additional regulations were needed to address the issue of under-age drinking while operating a snowmobile and snowcoach operators or guides operating under the influence while performing services for others. Many states have adopted similar alcohol standards for under-age operators and commercial drivers and the NPS feels it is necessary to include these regulations specifically to help mitigate potential safety concerns.

The alcohol level for minors (anyone under the age of 21) is set at .02. Although the NPS endorses a ''zero tolerance'', a very low Blood Alcohol Content (BAC) is established to avoid a chance of a false reading. Mothers Against Drunk Driving and other organizations have endorsed this enforcement posture and the NPS agrees that under-age drinking and driving, particularly in a harsh winter environment, will not be allowed.

In the case of snowcoach operator or guides, a low BAC limit is also necessary. Those persons operating a snowcoach are likely to be carrying 8 or more passengers in a vehicle with tracks or skis that is more challenging to operate than a wheeled vehicle, and along oversnow routes that could pose significant hazards should the driver not be paying close attention or have impaired judgement. Similarly, persons guiding others (commercially or non-commercially) on a snowmobile have put themselves in a position of responsibility for the safety of other visitors and of minimizing impacts to park wildlife and other resources. Should the guide's judgement be impaired, hazards such as wildlife on the road or snow obscured features, could endanger all members of the group in an unforgiving climate. For these reasons, the NPS is requiring that all guides be held to a stricter than normal standard for alcohol consumption. Therefore, the NPS has established a BAC limit of .02 for snowcoach operators and snowmobile guides. Again, the NPS endorses a ''zero tolerance'' but provides a minimal amount of latitude to avoid false positive readings. Should a snowcoach operator or snowmobile guide be found to have a BAC above .02, their authorization to serve as an operator or guide will be suspended and a fine may be imposed.

Do Other NPS Regulations Apply to the Use of Oversnow Vehicles?

These regulations propose to supercede the NPS' general snowmobiling regulations at 36 CFR 2.18 in order to avoid confusion as to how two separate bodies of snowmobile regulation interrelate. Relevant portions of 36 CFR 2.18 have been incorporated within these proposed regulations. The proposed rule also supercedes 36 CFR 2.19(b) because it provides for the towing of people behind an oversnow vehicle. The proposed rule prohibits towing of persons on skis, sleds, or other sliding devices by motor vehicle or snowmobile, except in emergency situations. Towing people, especially children, is a potential safety hazard and health risk due to road conditions, traffic volumes, and direct exposure to snowmobile emissions. This rule does not affect supply sleds attached by a rigid device or hitch pulled directly behind snowmobiles or other oversnow vehicles as long as no person or animal is hauled on them. Other provisions of 36 CFR Parts 1 and 2 continue to apply to the operation of oversnow vehicles unless specifically excluded here.

Are There Any Other Forms of Non-Motorized Oversnow Transportation Allowed in the Park?

YNP has specifically prohibited dog sledding and ski-joring (the practice of a skier being pulled by dogs or a vehicle) to prevent disturbance or harassment to wildlife. These restrictions have been in place for several years under regulatory authority and would now be codified in these regulations.

May I Operate a Snowplane?

Prior to the winter of 2002–2003, snowplanes were allowed on Jackson Lake within GTNP under a permit system, but not authorized for operation in YNP or the Parkway. The operation of snowplanes is now prohibited in all three parks, and this rule continues that prohibition. To avoid any uncertainty from this previous use on Jackson Lake, this proposed rule includes language that specifically prohibits the operation of snowplanes in each of these parks.

Is Violating Any of the Provisions of This Section Prohibited?

While writing this rule, park staff became concerned that a statement did not exist specifically prohibiting violations of this section. Some Magistrates have interpreted the lack of a specific prohibitory statement to be ambiguous and therefore unenforceable. Although it would seem to be implicit that each instance of a failure to abide by specific requirements is a separate violation, the proposed regulation contains clarifying language for this purpose. Each occurrence of non-compliance with these regulations is a separate violation. However, it should also be noted that each individual regulatory provision (*i.e.*, numbered in separate subparagraphs throughout these three sections) could be violated individually and are of varying severity. Thus, each subparagraph violated can and should receive individual fines in accordance with the issuance of the park's bail schedule as issued by the appropriate Magistrate. It is not intended that violations of the individual subparagraphs of these regulations be treated as a single violation or subject only to a single fine.

Summary of Economic Analysis

In support of the proposed rulemaking, NPS conducted a draft benefit-cost analysis and regulatory flexibility analysis. In support of the final rulemaking, a quantitative benefit-cost analysis will be conducted in

which the expected effects of the final rule would be monetized. The quantitative benefit-cost analysis will draw on data gathered from a survey of winter visitors to Yellowstone and Grand Teton National Parks conducted during the 2002–2003 winter season. A draft report on the survey will be released in conjunction with the draft benefit-cost analysis issued in support of the proposed rulemaking. Selected preliminary results from the survey were used to inform the draft benefit-cost analysis. The final report on the winter visitor survey will be released in conjunction with the quantitative benefit-cost analysis of the final rule. For the purposes of this benefit-cost analysis, Alternative 1b, as implemented by the 2002 ''delay rule'', represents the baseline against which other alternatives are compared. Under this baseline, most snowmobile use would be prohibited in the parks as of the winter of 2004–2005, with restrictions on snowmobile use phased in during the winter of 2003–2004. Alternatives 2, 3, and 4, as discussed in the FSEIS, allow for continued recreational snowmobile use subject to daily limits on the number of snowmobiles that can enter the parks. This rulemaking proposes to promulgate alternative 4, with a few modifications.

The primary beneficiaries of Alternatives 2, 3, and 4 are the park visitors who ride snowmobiles in the park and the businesses that serve them. Benefits accruing to individual visitors are called consumer surplus gains and those accruing to businesses are called producer surplus gains. Consumer surplus measures the net economic benefit obtained by individuals from participating in their chosen activities, while producer surplus measures the net economic benefit obtained by businesses from providing services to individuals. Overall, Alternative 2 should provide greater consumer surplus benefits to snowmobile riders than Alternatives 3 and 4, since it is less restrictive with respect to entry limits, snowmobile emission standards, and guiding requirements. As with the benefits described above, the costs of any alternative are measured relative to the baseline conditions. The primary group that would incur costs under Alternatives 2, 3, and 4 would be the park visitors who do not ride snowmobiles and the businesses that provide services to these visitors, as well as members of the general public who place a value on protecting park resources from the negative externalities associated with snowmobile use. Out of the set of alternatives that allow for continued snowmobile access to the parks, Alternative 3 is expected to impose the lowest costs on non-snowmobile users who are adversely affected by snowmobile use because of the lower daily limits, stricter emission limits and guided tour requirement relative to Alternatives 2 and 4. Alternative 4 is expected to impose only slightly higher costs on non-snowmobile users than Alternative 3, with the biggest difference between Alternatives 3 and 4 coming from the higher daily use limits under Alternative 4.

Balancing the benefits and the costs presented in this section, Alternative 4, as proposed in this rulemaking, provides for increased consumer surplus for snowmobile riders while containing provisions that should help mitigate the costs imposed on those visitors who are affected by the negative externalities imposed by snowmobiles.

Compliance With Other Laws

Regulatory Planning and Review (Executive Order 12866)

This document is a significant rule and has been reviewed by the Office of Management and Budget under Executive Order 12866.

(1) This rule will not have an effect of $100 million or more on the economy. It will not adversely affect in a material way the economy, productivity, competition, jobs, the environment, public health or safety, or State, local, or tribal governments or communities. These conclusions are based on the analysis contained in the Final SEIS and a report we commissioned on the economic impact of this regulation, ''Proposed Regulations on Snowmobile Riding in the Greater Yellowstone Area,'' MACTEC Engineering and Consulting, August 2003.

(2) This rule will not create a serious inconsistency or otherwise interfere with an action taken or planned by another agency. Implementing actions under this rule will not interfere with plans by other agencies or local government plans, policies, or controls since this is an agency specific change.

(3) This rule does not alter the budgetary effects of entitlements, grants, user fees, or loan programs or the rights or obligations of their recipients. It only affects the use of over-snow machines within specific national parks. No grants or other forms of monetary supplement are involved.

(4) This rule may raise novel legal or policy issues. The issue has generated local as well as national interest on the subject in the Greater Yellowstone Area. The NPS received nearly 360,000 public comment letters on the draft SEIS. Additionally, this is only the second NPS regulation to use an adaptive management strategy for managing visitor use levels. That concept, coupled with new provisions for Best Available Technology engine requirements, make this proposed rule unique to the NPS.

Regulatory Flexibility Act

The Department of the Interior certifies that this document will not have a significant economic effect on a substantial number of small entities under the Regulatory Flexibility Act (5 U.S.C. 601 *et seq.*). This certification is based on information contained in the reports entitled ''Winter 2002–2003 Visitor Survey: Yellowstone and Grand Teton National Parks'' (MACTEC Engineering and Consulting, Inc. August 2003) and ''Proposed Regulations on Snowmobile Riding in the Greater Yellowstone Area'' (MACTEC Engineering and Consulting, Inc. August 2003). These reports are available in their draft form on the Yellowstone website. Final versions of these reports will be available upon publication of the final rule.

Small Business Regulatory Enforcement Fairness Act (SBREFA)

This rule is not a major rule under 5 U.S.C. 804(2), the Small Business Regulatory Enforcement Fairness Act. This rule:

a. Does not have an annual effect on the economy of $100 million or more.

b. Will not cause a major increase in costs or prices for consumers, individual industries, Federal, State, or local government agencies, or geographic regions.

c. Does not have significant adverse effects on competition, employment, investment, productivity, innovation, or the ability of U.S.-based enterprises to compete with foreign-based enterprises. This rulemaking has no effect on methods of manufacturing or production and specifically affects the Wyoming region, not national or U.S. based enterprises.

Unfunded Mandates Reform Act

This rule does not impose an unfunded mandate on State, local, or tribal governments or the private sector of more than $100 million per year. The rule does not have a significant or unique effect on State, local or tribal governments or the private sector. It addresses public use of national park lands, and imposes no requirements on other agencies or governments.

Takings (Executive Order 12630)

In accordance with Executive Order 12630, the rule does not have significant

takings implications. Access to private property located within or adjacent to the parks will still be afforded the same access during winter as before this rule. No other property is affected.

Federalism (Executive Order 13132)

In accordance with Executive Order 13132, the rule does not have sufficient federalism implications to warrant the preparation of a Federalism Assessment. It addresses public use of national park lands, and imposes no requirements on other agencies or governments.

Civil Justice Reform (Executive Order 12988)

In accordance with Executive Order 12988, the Office of the Solicitor has determined that this rule does not unduly burden the judicial system and meets the requirements of sections 3(a) and 3(b)(2) of the Order.

Paperwork Reduction Act

This regulation does not require an information collection from 10 or more parties and a submission under the Paperwork Reduction Act is not required. An OMB form 83–I is not required.

National Environmental Policy Act

A Final Supplemental Environmental Impact Statement has been completed and a Record of Decision issued. The Final SEIS and ROD are available for review by contacting Yellowstone or Grand Teton Planning Offices or at *www.nps.gov/grte/winteruse/intro.htm.*

Government-to-Government Relationship With Tribes

In accordance with the President's memorandum of April 29, 1994, ''Government to Government Relations with Native American Tribal Governments'' (59 FR 22951) and 512 DM 2:

We have evaluated potential effects on federally recognized Indian tribes and have determined that there are no potential effects. Numerous tribes in the area were consulted in the development of the SEIS. Their major concern was to reduce the adverse effects on wildlife by snowmobiles. This rule does that through implementation of the guiding requirements and disbursement of snowmobile use through the various entrance stations.

Clarity of Rule

Executive Order 12866 requires each agency to write regulations that are easy to understand. We invite your comments on how to make this rule easier to understand, including answers to questions such as the following: (1) Are the requirements in the rule clearly stated? (2) Does the rule contain technical language or jargon that interferes with its clarity? (3) Does the format of the rule (grouping and order of sections, use of headings, paragraphing, etc.) aid or reduce its clarity? (4) Would the rule be easier to read if it were divided into more (but shorter) sections? (A ''section'' appears in bold type and is preceded by the symbol ''§'' and a numbered heading; for example § 7.13 Yellowstone National Park.) (5) Is the description of the rule in the **SUPPLEMENTARY INFORMATION** section of the preamble helpful in understanding the proposed rule? What else could we do to make the rule easier to understand?

Send a copy of any comments that concern how we could make this rule easier to understand to: Office of Regulatory Affairs, Department of the Interior, Room 7229, 1849 C Street, NW., Washington, DC 20240. You may also e-mail the comments to this address: *Exsec@ios.doi.gov.*

Drafting Information: The primary authors of this regulation were Kevin Schneider, Outdoor Recreation Planner, Mona Divine, Deputy Chief Ranger, John Sacklin, Supervisory Park Resource Planner, Yellowstone National Park and; Bill Holda, Supervisory Park Ranger, Grand Teton National Park; and Kym Hall, NPS Regulations Program Manager, and Barry Roth, Attorney-Advisor, Washington, DC.

Public Participation: If you wish to comment, you may submit your comments by any one of several methods. You may mail comments to: Planning Office, Yellowstone National Park, PO Box 168, Yellowstone National Park, WY 82190. You may also comment via the Internet at *www.nps.gov/yell/rule.* Finally, you may hand deliver comments to Planning Office, Mammoth Hot Springs, Yellowstone National Park, Wyoming. Our practice is to make comments, including names and addresses of respondents, available for public review during regular business hours. Individual respondents may request that we withhold their home address from the rulemaking record, which we will honor to the extent allowable by law. If you wish us to withhold your name and/or address, you must state this prominently at the beginning of your comment. However, we will not consider anonymous comments. We will make all submissions from organizations or businesses, and from individuals identifying themselves as representatives or officials of organizations or businesses, available for public inspection in their entirety.

List of Subjects in 36 CFR Part 7

District of Columbia, National parks, Reporting and recordkeeping requirements.

We propose to amend 36 CFR part 7 as set forth below:

PART 7—SPECIAL REGULATIONS, AREAS OF THE NATIONAL PARK SYSTEM

1. The authority for part 7 continues to read as follows:

Authority: 16 U.S.C. 1, 3, 9a, 460(q), 462(k); sec. 7.96 also issued under D.C. Code 8–137 (1981) and D.C. Code 40–721 (1981).

2. Amend § 7.13 to revise paragraph (l) to read as follows:

§ 7.13 Yellowstone National Park.

* * * * *

(l)(1) *What terms do I need to know?* *Commercial guide* means those guides who operate as a snowmobile guide for a fee or compensation and are authorized to operate in the park under a concession contract.

Non-commercial guide means those authorized guides who have successfully completed an NPS-approved training course and provide guiding services without compensation.

Oversnow route means that portion of the unplowed roadway located between the road shoulders and is designated by snow poles or other poles, ropes, fencing, or signs erected to regulate over-snow activity. Oversnow routes include pullouts or parking areas that are groomed or marked similarly to roadways and are adjacent to designated oversnow routes. An oversnow route may also be distinguished by the interior boundaries of the berm created by the packing and grooming of the unplowed roadway. Only oversnow vehicles are permitted on oversnow routes.

Oversnow vehicle means a snowmobile, snowcoach, or other motorized vehicle that is intended for travel primarily on snow and is authorized by the Superintendent to operate in the park. An oversnow vehicle that does not meet the definition of a snowcoach or a snowplane must comply with all requirements applicable to snowmobiles.

Snowcoach means a self-propelled mass transit vehicle intended for travel on snow, having a curb weight of over 1000 pounds (450 kilograms), driven by a track or tracks and steered by skis or tracks, having a capacity of at least 8 passengers.

Snowplane means a self-propelled vehicle intended for oversnow travel and driven by an air-displacing propeller.

(2) *May I operate a snowmobile in Yellowstone National Park?* You may operate a snowmobile in Yellowstone National Park in compliance with use limits and entry passes, guiding requirements, operating dates, equipment, and operating conditions established in this section. The Superintendent may establish additional operating conditions and shall provide notice of those conditions in accordance with § 1.7(a) of this chapter.

(3) *May I operate a snowcoach in Yellowstone National Park?* Commercial snowcoaches may be operated in Yellowstone National Park under a concessions contract. Non-commercial snowcoaches may be operated if authorized by the Superintendent. Snowcoach operation is subject to the conditions stated in the concessions contract and all other conditions identified in this section:

(i) Beginning with the winter of 2005–2006, all non-historic snowcoaches must meet NPS emissions requirements. These requirements are the EPA's emission standards for the vehicle at the time it was manufactured.

(ii) Any pollution control equipment that has exceeded its useful life must be replaced.

(iii) Tampering with or disabling a snowcoach's original pollution control equipment is prohibited except for maintenance purposes.

(iv) Individual snowcoaches will be periodically inspected tested to determine compliance with the requirements of paragraphs (l)(3)(i) through (l)(3)(iii) of this section.

(v) Beginning with the winter of 2008–2009, all non-historic snowcoaches must meet NPS sound requirements. Snowcoaches must operate at or below 75 dB(A) as measured at 25 mph on the A-weighted scale at 50 feet using test procedures similar to Society of Automotive Engineers J1161 (revised 1983).

(vi) Historic snowcoaches (Bombardier snowcoaches manufactured in 1983 or earlier) are not initially required to meet air or sound requirements.

(4) *Must I operate a certain model of snowmobile?* Only commercially available snowmobiles that meet NPS air and sound emissions requirements may be operated in Yellowstone National Park. The park will identify snowmobile makes, models, and year of manufacture that meet those requirements. Any snowmobile not so identified by the NPS may not be operated in the park.

(i) Snowmobiles must achieve air emissions below 15 g/kW-hr for hydrocarbons and 120 g/kW-hr for carbon monoxide as tested using a 5-mode engine dynamometer in accordance with the test cycle identified by EPA's snowmobile regulations in 40 CFR parts 1051 and 1065.

(ii) For sound emissions snowmobiles must operate at or below 73dB(A) as measured at full throttle according to Society of Automotive Engineers J192 test procedures (revised 1985).

(iii) Snowmobiles not operating under a concessions contract do not have to meet air and sound requirements for the winter 2003–2004 only.

(5) *Where must I operate my snowmobile in Yellowstone National Park?* You must operate your snowmobile only upon designated oversnow routes established within the park. The following oversnow routes are designated for snowmobile use:

(i) The Grand Loop Road from its junction with Terrace Springs Drive to Norris Junction.

(ii) Norris Junction to Canyon Junction.

(iii) The Grand Loop Road from Norris Junction to Madison Junction.

(iv) The West Entrance Road from the park boundary at West Yellowstone to Madison Junction.

(v) The Grand Loop Road from Madison Junction to West Thumb.

(vi) The South Entrance Road from the South Entrance to West Thumb.

(vii) The Grand Loop Road from West Thumb to its junction with the East Entrance Road.

(viii) The East Entrance Road from the East Entrance to its junction with the Grand Loop Road.

(ix) The Grand Loop Road from its junction with the East Entrance Road to Canyon Junction.

(x) The South Canyon Rim Drive.

(xi) Lake Butte Road.

(xii) In the developed areas of Madison Junction, Old Faithful, Grant Village, Lake, Fishing Bridge, Canyon, Indian Creek, and Norris.

(xiii) The Superintendent may designate additional oversnow routes for snowmobiles only when the use is consistent with the park's natural, cultural, scenic and aesthetic values, safety considerations, park management objectives, and will not disturb wildlife or damage park resources.

(xiv) The Superintendent may open or close these or other routes, or portions thereof, after taking into consideration the location of wintering wildlife, appropriate snow cover, public safety, and other factors. Notice of such opening or closing shall be provided by one or more of the methods listed in § 1.7(a) of this chapter.

(xv) Maps detailing the designated oversnow routes will be available from Park Headquarters.

(6) *What routes are designated for snowcoach use?* Authorized snowcoaches may only be operated on the routes designated for snowmobile use in paragraphs (l)(5)(i) through (l)(5)(xii) of this section and the following additional oversnow routes:

(i) Firehole Canyon Drive.

(ii) Fountain Flat Road.

(iii) Virginia Cascades Drive.

(iv) North Canyon Rim Drive.

(v) Riverside Drive.

(vi) That portion of the Grand Loop Road from Canyon Junction to Washburn Hot Springs overlook.

(vii) The Superintendent may designate or close these or other oversnow routes for snowcoach travel. Notice of such opening or closing shall be provided by one or more of the methods listed in § 1.7(a) of this chapter.

(7) *Will I be required to use a guide while snowmobiling in Yellowstone?* Beginning in the winter of 2004–2005, all recreational snowmobile operators must be accompanied by a guide that has successfully completed an NPS-approved training program.

(8) *What other requirements apply to the use of snowmobile guides?* During the winter of 2003–2004 only, eighty percent (80%) of the authorized daily snowmobile entries are allocated under concessions contracts for commercial guiding services, while the remaining twenty percent (20%) of the authorized daily snowmobile entries are allocated to the general public and do not require a guide. Beginning the winter of 2004–2005, eighty percent (80%) of the authorized daily snowmobile entries for each entrance are allocated for commercially guided parties, while the remaining twenty percent (20%) of the authorized daily snowmobile entries are allocated for non-commercially guided parties.

(i) Non-commercial guides will be required to successfully complete a training program approved by the Superintendent to include training on park rules, safety considerations, and appropriate actions to minimize impacts to wildlife and other park resources.

(ii) Snowmobile parties must travel in a group of at least two snowmobiles but no more than 11 snowmobiles, including that of the guide.

(iii) It is prohibited for non-commercial guides, or anyone else, to receive fees or other forms of compensation for non-commercial guiding services.

(iv) Guided parties must travel together within a maximum of one-third

mile of the first snowmobile in the group.

(v) The Superintendent may change requirements related to guiding, including the commercial: non-commercial guide ratio. Except for emergency situations, changes to guiding requirements may be made annually and the public will be notified of those changes by one or more of the procedures listed in § 1.7(a) of this chapter.

(9) *Are there limits established for the numbers of snowmobiles permitted to enter the park each day?* Beginning with the winter of 2003–2004, the numbers of snowmobiles allowed to enter the park each day will be limited to a certain number per entrance. The initial limits are listed in the following table:

TABLE 1 TO § 7.13.—INITIAL DAILY SNOWMOBILE ENTRY LIMITS

Park entrance road segment	Number of commercially-guided snowmobiles entrance passes	Number of non-commercially guided snowmobile entrance passes [1]	Total number of snowmobile entrance passes
(i) YNP—North Entrance	40	10	50
(ii) YNP—West Entrance	440	110	550
(iii) YNP—South Entrance	200	50	250
(iv) YNP—East Entrance	80	20	100

[1] In the 2003–2004 winter season only, these entries would be available for unguided parties, to allow sufficient time to develop and implement a non-commercial guide training program.

(v) The limits established in Table 1 to this section apply until modified by the Superintendent. The Superintendent may establish different limits on an annual basis, after taking into consideration the effectiveness of air and sound requirements, the state of technology, monitoring results, or other relevant information. The public will be made aware of any new limits through publication in the **Federal Register** and using one or more of the methods listed in § 1.7(a) of this chapter.

(10) *When may I operate my snowmobile or snowcoach?* (i) A snowmobile or snowcoach may only be operated between 7:00 a.m. and 9:00 p.m.

(ii) The Superintendent may adjust operating hours. Except for emergency situations, changes to operating hours may be made annually and the public will be notified of those changes through publication in the **Federal Register** and through one or more of the methods listed in § 1.7(a) of this chapter.

(11) *What other conditions apply to the operation of oversnow vehicles?* (i) The following operating conditions are prohibited:

(A) Idling an oversnow vehicle more than 5 minutes at any one time.

(B) Operating an oversnow vehicle while the operator's state motor vehicle license or privilege is suspended or revoked by any state.

(C) Allowing or permitting an unlicensed driver to operate an oversnow vehicle.

(D) Operating an oversnow vehicle in willful or wanton disregard for the safety of persons, property, or park resources or otherwise in a reckless manner.

(E) Operating an oversnow vehicle without a lighted white headlamp and red taillight.

(F) Operating an oversnow vehicle that does not have brakes in good working order.

(G) The towing of persons on skis, sleds or other sliding devices by oversnow vehicles, except in emergency situations.

(ii) The following operating conditions are required:

(A) All vehicles that stop on designated routes must pull over to the far right and next to the snow berm. Pullouts must be utilized where available and accessible. Vehicles may not be stopped in a hazardous location or where the view might be obscured, or operating so slowly as to interfere with the normal flow of traffic.

(B) Oversnow vehicle operators must possess a valid state motor vehicle operator's license. A learner's permit does not satisfy this requirement. The license must be carried on the operator's person at all times.

(C) Equipment sleds towed by a snowmobile must be pulled behind the snowmobile and fastened to the snowmobile with a rigid hitching mechanism.

(D) Snowmobiles must be properly registered and display a valid state registration sticker from any state in the United States.

(iii) The Superintendent may impose other terms and conditions as necessary to protect park resources, visitors, or employees. The public will be notified of any changes through one or more methods listed in § 1.7(a) of this chapter.

(12) *What conditions apply to alcohol use while operating an oversnow vehicle?* In addition to the regulations contained in 36 CFR 4.23, the following conditions apply:

(i) Operating or being in actual physical control of an oversnow vehicle is prohibited when the operator is 20 years of age or younger and the alcohol concentration in the operator's blood or breath is 0.02 grams or more of alcohol per 100 milliliters or blood or 0.02 grams or more of alcohol per 210 liters of breath.

(ii) Operating or being in actual physical control of an oversnow vehicle is prohibited when the operator is a snowmobile guide or a snowcoach operator and the alcohol concentration in the operator's blood or breath is 0.02 grams or more of alcohol per 100 milliliters of blood or 0.02 grams or more of alcohol per 210 liters of breath.

(iii) Refusing to take an alcohol or drug test, as required under 36 CFR 4.23, or any conviction for driving under the influence of drugs or alcohol while driving a motor vehicle or operating an oversnow vehicle disqualifies an operator from snowmobile guiding or operating a commercial snowcoach.

(13) *Do other NPS regulations apply to the use of oversnow vehicles?* The following sections apply to the use of oversnow vehicles, but the provisions of this section govern for purposes of operating an oversnow vehicle:

(i) Notwithstanding the definition of vehicle set forth in § 1.4, the provisions of §§ 4.3, 4.4, 4.12, 4.13, 4.14, 4.20, 4.21, 4.22, and 4.23 of this chapter apply to the operation of an oversnow vehicle.

(ii) The use of snowmobiles in Yellowstone is not subject to §§ 2.18 and 2.19(b) of this chapter.

(14) *Are there any other forms of non-motorized oversnow transportation allowed in the park?* Non-motorized

travel consisting of skiing, skating, snowshoeing, or walking are permitted unless otherwise restricted pursuant to this section or other provisions of 36 CFR part 1.

(i) The Superintendent may designate areas of the park as closed, reopen such areas or establish terms and conditions for non-motorized travel within the park in order to protect visitors, employees or park resources.

(ii) Dog sledding or ski-jorring is prohibited.

(15) *May I operate a snowplane in Yellowstone?* The operation of a snowplane in Yellowstone is prohibited.

(16) *Is violating any of the provisions of this section prohibited?* Violating any of the terms, conditions or requirements of paragraphs (l)(1) through (l)(15) of this section is prohibited. Each occurrence of non-compliance with these regulations is a separate violation.

* * * * *

3. Amend § 7.21 to revise paragraph (a) to read as follows:

§ 7.21 John D. Rockefeller, Jr., Memorial Parkway.

(a)(1) *What terms do I need to know?* All the terms in § 7.13(l)(1) of this part apply to this section.

(2) *May I operate a snowmobile in the Parkway?* You may operate a snowmobile in the Parkway in compliance with use limits, guiding requirements, operating dates, equipment, and operating conditions established in this section. The Superintendent may establish additional operating conditions and shall provide notice of those conditions in accordance with § 1.7(a) of this chapter.

(3) *May I operate a snowcoach in the Parkway?* Commercial snowcoaches may be operated in the Parkway under a concessions contract. Non-commercial snowcoaches may be operated if authorized by the Superintendent. Snowcoach operation is subject to the conditions stated in the concessions contract and all other conditions identified in this section.

(i) Beginning with the winter of 2005–2006, all non-historic snowcoaches must be NPS air emissions requirements. These requirements are the EPA's emission standards for the vehicle at the time it was manufactured.

(ii) Any pollution equipment that has exceeded it useful life must be replaced.

(iii) Tampering with or disabling a snowcoach's original pollution control equipment is prohibited except for maintenance purposes.

(iv) Individual snowcoaches will be periodically inspected to determine compliance with the requirements of paragraphs (a)(3)(i) through (a)(3)(iii) of this section.

(v) Beginning with the winter of 2008–2009, all non-historic snowcoaches must meet NPS sound requirements. Snowcoaches must operate at or below 75 dB(A) as measured at 25 mph on the A-weighted scale at 50 feet using test procedures similar to Society of Automotive Engineers J1161 (revised 1983).

(vi) Historic snowcoaches (Bombardier snowcoaches manufactured in 1983 or earlier) are not required to meet air or sound requirements.

(4) *Must I operate a certain model of snowmobile?* Only commercially available snowmobiles that meet NPS air and sound requirements may be operated in the parkway. The park will identify snowmobile makes, models, and year of manufacture that meet those requirements. Any snowmobile not so identified by the NPS may not be operated in the park.

(i) Snowmobiles must achieve air emissions below 15 g/kW-hr for hydrocarbons and 120 g/kW-hr for carbon monoxide as tested using a 5-mode engine dynamometer in accordance with the test cycle identified by EPA's snowmobile regulations in 40 CFR parts 1051 and 1065.

(ii) For sound emissions snowmobiles must operate at or below 73dB(A) as measured at full throttle according to Society of Automotive Engineers J192 test procedures (revised 1985).

(iii) These air and sound emissions requirements shall not apply to snowmobiles originating in the Targhee National Forest and traveling on the Grassy Lake Road to Flagg Ranch; however, these snowmobiles may not travel further into the Parkway than Flagg Ranch.

(5) *Where must I operate my snowmobile in the Parkway?* You must operate your snowmobile only upon designated oversnow routes established within the Parkway. The following oversnow routes are designated for snowmobile use:

(i) The Continental Divide Snowmobile Trail (CDST) along U.S. Highway 89/287 from the southern boundary of the Parkway north to the Snake River Bridge.

(ii) Along U.S. Highway 89/287 from the Snake River Bridge to the northern boundary of the Parkway.

(iii) Grassy Lake Road from Flagg Ranch to the western boundary of the Parkway.

(iv) The Superintendent may designate other oversnow routes for snowmobile use only when the use is consistent with the park's natural, cultural, scenic and aesthetic values, safety considerations, park management objectives, and will not disturb wildlife or damage park resources.

(v) The Superintendent may open or close these routes or other routes, or portions thereof, after taking into consideration the location of wintering wildlife, appropriate snow cover, public safety or to effectively manage visitor use and experience. Notice of such opening or closing shall be provided by one or more of the methods listed in § 1.7(a) of this chapter.

(vi) Maps detailing the designated oversnow routes will be available from Park Headquarters.

(6) *What routes are designated for snowcoach use?* (i) Authorized snowcoaches may only be operated on the route designated for snowmobile use in paragraph (a)(5)(ii) of this section. No other routes are open to snowcoach use.

(ii) The Superintendent may designate or close these or other oversnow routes for snowcoach travel. Notice of such opening or closing shall be provided by one or more of the methods listed in § 1.7(a) of this chapter.

(7) *Will I be required to use a guide while snowmobiling in the Parkway?* Beginning in the winter of 2004–2005, all recreational snowmobile operators using the oversnow route along U.S. Highway 89/287 from Flagg Ranch to the northern boundary of the parkway must be accompanied by a guide that has successfully completed an NPS-approved training program. A guide is not required in other portions of the parkway.

(8) *What other requirements apply to the use of snowmobile guides?* During the winter of 2003–2004 only, eighty percent (80%) of the authorized daily snowmobile use on U.S. Highway 89/287 from the Snake River Bridge to the northern boundary of the Parkway is awarded under concessions contracts for commercial guiding services, while the remaining twenty percent (20%) of the authorized daily snowmobile entries do not require a guide. Beginning the winter of 2004–2005, eighty percent (80%) of the authorized daily snowmobile use on this road segment are allocated for commercially guided parties. The remaining twenty percent (20%) of authorized daily snowmobile use is allocated for non-commercially guided parties.

(i) Non-commercial guides are required to successfully complete a training program approved by the Superintendent to include training on parkway rules, safety considerations, and appropriate actions to minimize impacts to wildlife and other parkway resources.

(ii) Snowmobile parties must travel in a group of at least two snowmobiles but no more than 11 snowmobiles, including the guide.

(iii) It is prohibited for non-commercial guides, or anyone else, to receive fees or other forms of compensation for the non-commercial guiding services.

(iv) Guided parties must travel together within a maximum of one-third mile of the first snowmobile in the group.

(v) The Superintendent may change requirements related to guiding, including the commercial to non-commercial guide ratio. Except for emergency situations, changes to guiding requirements may be made annually and the public will be notified of those changes by one or more of the procedures listed in § 1.7(a) of this chapter.

(9) *Are there limits established for the numbers of snowmobiles permitted to enter the Parkway each day?* (i) Beginning with the winter of 2003–2004, the numbers of snowmobiles allowed to enter the Parkway each day will be limited to a certain number per road segment.

TABLE 1 TO § 7.21.—INITIAL DAILY SNOWMOBILE ENTRY LIMITS

Park entrance/road segment	Number of commercially-guided snowmobile entrance passes	Number of non-commercially guided showmobile entrance passes	Total number of snowmobile entrance passes
(A) GTNP and the Parkway—Total Use on CDST [2]	N/A	N/A	[1] 75
(B) Parkway—Toal Use Grassy Lake Road	N/A	N/A	[1] 75

[1] These users do not have to be accompanied by a guide.
[2] The Continental Divide Snowmobile Trail lies within both GTNP and the Parkway. The 75 daily snowmobile use limit applies to total use on this trail in both parks.

(ii) The limits established in Table 1 to this section apply until modified by the Superintendent. The Superintendent may modify these limits annually after taking into consideration the effectiveness of air and sound requirements, the state of technology, monitoring results, or other relevant information. The public will be made aware of new limits through publication in the **Federal Register** and using one or more of the methods listed in § 1.7(a) of this chapter.

(10) *When may I operate my snowmobile or snowcoach?* (i) A snowmobile or snowcoach may only be operated between 7 a.m. and 9 p.m.

(ii) The Superintendent may adjust operating hours. Except for emergency situations, changes to operating hours may be made annually and the public will be notified of those changes through publication in the **Federal Register** and through one or more of the methods listed in § 1.7(a) of this chapter.

(11) *What other conditions apply to the operation of oversnow vehicles?* (i) The following operating conditions are prohibited:

(A) Idling an oversnow vehicle more than 5 minutes at any one time.

(B) Operating an oversnow vehicle while the operator's state motor vehicle license or privilege is suspended or revoked by any state.

(C) Allowing or permitting an unlicensed driver to operate an oversnow vehicle.

(D) Operating an oversnow vehicle in willful or wanton disregard for the safety of persons, property, or parkway resources or otherwise in a reckless manner.

(E) Operating an oversnow vehicle without a lighted white headlamp and red taillight.

(F) Operating an oversnow vehicle that does not have brakes in good working order.

(G) The towing of persons on skis, sleds or other sliding devices by oversnow vehicles, except in emergency situations.

(ii) The following operating conditions are required:

(A) All vehicles that stop on designated routes must pull over to the far right and next to the snow berm. Pullouts must be utilized where available and accessible. Vehicles may not be stopped in a hazardous location or where the view might be obscured, or operating so slowly as to interfere with the normal flow of traffic.

(B) Oversnow vehicle operators must possess a valid state motor vehicle operator's license. The license must be carried on the operator's person at all times.

(C) Equipment sleds towed by a snowmobile must be pulled behind the snowmobile and fastened to the snowmobile with a rigid hitching mechanism.

(D) Snowmobiles must be properly registered and display a valid state registration sticker from any state in the United States.

(iii) The Superintendent may impose other terms and conditions as necessary to protect parkway resources, visitors, or employees. The public will be notified of any changes through one or more methods listed in § 1.7(a) of this chapter.

(12) *What conditions apply to alcohol use while operating an oversnow vehicle?* In addition to the regulations in 36 CFR 4.23, the following conditions apply:

(i) Operating or being in actual physical control of an oversnow vehicle is prohibited when the operator is 20 years of age or younger and the alcohol concentration in the operator's blood or breath is 0.02 grams or more of alcohol per 100 milliliters or blood or 0.02 grams or more of alcohol per 210 liters of breath.

(ii) Operating or being in actual physical control of an oversnow vehicle is prohibited when the operator is a guide or a snowcoach operator and the alcohol concentration in the operator's blood or breath is 0.02 grams or more of alcohol per 100 milliliters of blood or 0.02 grams or more of alcohol per 210 liters of breath.

(iii) Refusing to take an alcohol or drug test, as required under 36 CFR 4.23, or any conviction for driving under the influence of drugs or alcohol while driving a motor vehicle or operating an oversnow vehicle disqualifies an operator from guiding or operating a commercial snowcoach.

(13) *Do other NPS regulations apply to the use of oversnow vehicles?* The following sections apply to the use of oversnow vehicles, but the provisions of this section govern for purposes of operating an oversnow vehicle:

(i) Notwithstanding the definition of vehicle set forth in § 1.4, the provisions of §§ 4.1, 4.3, 4.4, 4.12, 4.13, 4.14, 4.20, 4.21, 4.22, and 4.23 of this chapter

apply to the operation of an oversnow vehicle.

(ii) The use of snowmobiles in the Parkway is not subject to §§ 2.18 and 2.19(b) of this chapter.

(14) *Are there any other forms of non-motorized oversnow transportation allowed in the parkway?* (i) Non-motorized travel consisting of skiing, skating, snowshoeing, or walking are permitted unless otherwise restricted pursuant to this section or other provisions of 36 CFR part 1 provided you follow all applicable regulations.

(ii) The Superintendent may designate areas of the parkway as closed, reopen such areas or establish terms and conditions for non-motorized travel within the parkway in order to protect visitors, employees or park resources.

(15) *May I operate a snowplane in the parkway?* The operation of a snowplane in the parkway is prohibited.

(16) *Is violating any of the provisions of this section prohibited?* Violating any of the terms, conditions or requirements of paragraphs (a)(1) through (a)(15) of this section is prohibited. Each occurrence of non-compliance with these regulations is a separate violation.

* * * * *

4. Amend § 7.22 to revise paragraph (g) to read as follows:

§ 7.22 Grand Teton National Park.

* * * * *

(g)(1) *What terms do I need to know?* All the terms in § 7.13(l)(1) of this part apply to this section.

(2) *May I operate a snowmobile in the Grand Teton National Park?* You may operate a snowmobile in Grand Teton National Park in compliance with use limits, guiding requirements, operating dates, equipment, and operating conditions established in this section. The Superintendent may establish additional operating conditions and provide notice of those conditions in accordance with § 1.7(a) of this chapter.

(3) *May I operate a snowcoach in Grand Teton National Park?* It is prohibited to operate a snowcoach in Grand Teton National Park.

(4) *Must I operate a certain model of snowmobile in the park?* Only commercially available snowmobiles that meet NPS air and sound requirements may be operated in Grand Teton National Park. The park will identify snowmobile makes, models, and year of manufacture that meet those requirements. Any snowmobile not so identified by the NPS may not be operated in the park.

(i) Snowmobiles must achieve air emissions below 15 g/kW-hr for hydrocarbons and 120 g/kW-hr for carbon monoxide as tested using a 5-mode engine dynamometer in accordance with the test cycle identified by EPA's snowmobile regulations in 40 CFR parts 1051 and 1065.

(ii) For sound emissions snowmobiles must operate at or below 73dB(A) as measured at full throttle according to Society of Automotive Engineers J192 test procedures (revised 1985).

(iii) These air and sound requirements do not apply to snowmobiles while in use to access lands authorized by paragraphs (g)(14) and (g)(16) of this section.

(iv) Snowmobiles do not have to meet air and sound requirements for the winter 2003–2004 only.

(5) *Where must I operate my snowmobile in the park?* You must operate your snowmobile only upon designated oversnow routes established within the park. The following oversnow routes are designated for snowmobile use:

(i) The frozen water surface of Jackson Lake for the purposes of ice fishing only. Those persons accessing Jackson lake for ice fishing must possess a valid state fishing license and the proper fishing gear.

(ii) The Continental Divide Snowmobile Trail along U.S. 26/287 from Moran Junction to the eastern park boundary and along U.S. 89/287 from Moran Junction to the north park boundary.

(iii) The Superintendent may designate snowmobile routes only when the use is consistent with the park's natural, cultural, scenic and aesthetic values, safety considerations, park management objectives, and will not disturb wildlife or damage park resources.

(iv) The Superintendent may open or close these or other routes, or portions thereof, and may establish separate zones for motorized and non-motorized use on Jackson Lake, after taking into consideration the location of wintering wildlife, appropriate snow cover, public safety and to effectively manage visitor use and experience. Notice of such opening or closing shall be provided by one or more of the methods listed in § 1.7(a) of this chapter.

(v) Maps detailing the designated oversnow routes will be available from Park Headquarters.

(6) *Will I be required to use a guide while snowmobiling in Grand Teton National Park?* (i) You will not be required to use a guide while snowmobiling in Grand Teton National Park.

(ii) The Superintendent may establish requirements related to the use of guides, including requirements for commercial and/or non-commercial guides. Changes to guiding requirements may be made annually and the public will be notified of those changes by one or more of the procedures listed in § 1.7(a) of this chapter.

(7) *Are there limits established for the numbers of snowmobiles permitted to operate in Grand Teton National Park each day?* (i) Beginning with the winter of 2003–2004, the numbers of snowmobiles allowed to enter the park each day will be limited to a certain number per road segment or area. The initial limits are listed in the following table:

TABLE 1. TO § 7.22.—TO INITIAL DAILY SNOWMOBILE ENTRY LIMITS

Park entrance/road segment	Number of commercially-guided snowmobile entrance passes	Number of non-commercially guided snowmobile entrance passes	Total number of snowmobile entrance passes
(A) GTNP and the Parkway—Total Use on CDST [2]	N/A	N/A	75
(B) Jackson Lake	N/A	N/A	40

[1] These users do not have to be accompanied by a guide.

[2] The Continental Divide Snowmobile Trail lies within both GTNP and the Parkway. The 75 daily snowmobile use limit applies to total use on this trail in both parks.

(ii) The limits established in Table 1 of this section apply until modified by the Superintendent. The Superintendent may modify these limits annually after taking into consideration the effectiveness of air and sound

requirements, the state of technology, monitoring results, or other relevant information. The public will be made aware of new limits through publication in the **Federal Register** and using one or more of the methods listed in § 1.7(a) of this chapter.

(8) *When may I operate my snowmobile?* (i) A snowmobile may only be operated between 7 a.m. and 9 p.m.

(ii) The Superintendent may adjust operating hours. Except for emergency situations, changes to operating hours may be made annually and the public will be notified of those changes through publication in the **Federal Register** and through one or more of the methods listed in § 1.7(a) of this chapter.

(9) *What other conditions apply to the operation of oversnow vehicles?* (i) The following operating conditions are prohibited:

(A) Idling an oversnow vehicle more than 5 minutes at any one time.

(B) Operating an oversnow vehicle while the operator's state motor vehicle license or privilege is suspended or revoked by any state.

(C) Allowing or permitting an unlicensed driver to operate an oversnow vehicle.

(D) Operating an oversnow vehicle in willful or wanton disregard for the safety of persons, property, or park resources or otherwise in a reckless manner.

(E) Operating an oversnow vehicle without a lighted white headlamp and red taillight.

(F) Operating an oversnow vehicle that does not have brakes in good working order.

(G) The towing of persons on skis, sleds or other sliding devices by oversnow vehicles.

(ii) The following operating conditions are required:

(A) All vehicles that stop on designated routes must pull over to the far right and next to the snow berm. Pullouts must be utilized where available and accessible. Vehicles may not be stopped in a hazardous location or where the view might be obscured, or operating so slowly as to interfere with the normal flow of traffic.

(B) Oversnow vehicle operators must possess a valid state motor vehicle operator's license. The license must be carried on the operator's person at all times.

(C) Equipment sleds towed by a snowmobile must be pulled behind the snowmobile and fastened to the snowmobile with a rigid hitching mechanism.

(D) Snowmobiles must be properly registered and display a valid state registration sticker from any state in the United States.

(iii) The Superintendent may impose other terms and conditions as necessary to protect park resources, visitors, or employees. The public will be notified of any changes through one or more methods listed in § 1.7(a) of this chapter.

(10) *What conditions apply to alcohol use while operating an oversnow vehicle?* In addition to the regulations in 36 CFR 4.23, the following conditions apply:

(i) Operating or being in actual physical control of an oversnow vehicle is prohibited when the operator is 20 years of age or younger and the alcohol concentration in the operator's blood or breath is 0.02 grams or more of alcohol per 100 milliliters or blood or 0.02 grams or more of alcohol per 210 liters of breath.

(ii) Operating or being in actual physical control of an oversnow vehicle is prohibited when the operator is a commercial guide or a snow coach operator and the alcohol concentration in the operator's blood or breath is 0.02 grams or more of alcohol per 100 milliliters of blood or 0.02 grams or more of alcohol per 210 liters of breath.

(11) *Do other NPS regulations apply to the use of oversnow vehicles?* The following sections apply to the use of oversnow vehicles, but the provisions of this section govern for purposes of operating an oversnow vehicle:

(i) Notwithstanding the definition of vehicle set forth in § 1.4, the provisions of §§ 4.1, 4.3, 4.4, 4.12, 4.13, 4.14, 4.20, 4.21, 4.22, and 4.23 of this chapter apply to the operation of an oversnow vehicle.

(ii) The use of snowmobiles in Grand Teton National Park is not subject to §§ 2.18 and 2.19(b) of this chapter.

(12) *Are there any other forms of non-motorized oversnow transportation allowed in the park?* (i) Non-motorized travel including skiing, skating, snowshoeing, or walking are permitted provided you follow all applicable regulations.

(ii) The Superintendent may designate areas of the park as closed or establish terms and conditions for skiing, snowshoeing, or walking in order to protect visitors, employees or park resources.

(13) *May I operate a snowplane in Grand Teton National Park?* The operation of a snowplane in Grand Teton National Park is prohibited.

(14) *May I continue to access public lands via snowmobile through the park?* Reasonable and direct access, via snowmobile, to adjacent public lands will continue to be permitted on designated routes through the park. Requirements established in this section related to snowmobile operator age, guiding and licensing do not apply on these oversnow routes. The following routes only are designated for access via snowmobile to public lands:

(i) From the parking area at Shadow Mountain directly along the unplowed portion of the road to the east park boundary.

(ii) Along the unplowed portion of the Ditch Creek Road directly to the east park boundary.

(15) *For what purpose may I use the routes designated in paragraph (g)(14) of this section?* You may use those routes designated in paragraph (g)(14) of this section only to gain direct access to public lands adjacent to the park boundary.

(16) *May I continue to access private property within or adjacent to the park via snowmobile?* Until such time as the United States takes full possession of an inholding in the park, the Superintendent may establish reasonable and direct access routes via snowmobile, to such inholding, or to private property adjacent to park boundaries for which other routes or means of access are not reasonably available. Requirements established in this section related to air and sound emissions, snowmobile operator age, licensing, and guiding do not apply on these oversnow routes. The following routes are designated for access to properties within or adjacent to the park:

(i) The unplowed portion of Antelope Flats Road off U.S. 26/89 to private lands in the Craighead Subdivision.

(ii) The unplowed portion of the Teton Park Road to the piece of land commonly referred to as the ''Clark Property''.

(iii) From the Moose-Wilson Road to the land commonly referred to as the ''Barker Property''.

(iv) From the Moose-Wilson Road to the land commonly referred to as the ''Wittimer Property''.

(v) From the Moose-Wilson Road to those two pieces of land commonly referred to as the ''Halpin Properties''.

(vi) From the south end of the plowed sections of the Moose-Wilson Road to that piece of land commonly referred to as the ''JY Ranch''.

(vii) From Highway 26/89/187 to those lands commonly referred to as the ''Meadows'', the ''Circle EW Ranch'', the ''Moulton Property'', the ''Levinson Property'' and the ''West Property''.

(viii) From Cunningham Cabin pullout on U.S. 26/89 near Triangle X to

the piece of land commonly referred to as the ''Lost Creek Ranch''.

(ix) Maps detailing designated routes will be available from Park Headquarters.

(17) *For what purpose may I use the routes designated in paragraph (g)(16) of this section?* Those routes designated in paragraph (g)(16) of this section are only to access private property within or directly adjacent to the park boundary. Use of these roads via snowmobile is authorized only for the landowners and their representatives or guests. Use of these roads by anyone else or for any other purpose is prohibited.

(18) *Is violating any of the provisions of this section prohibited?* Violating any of the terms, conditions or requirements of paragraphs (g)(1) through (g)(17) of this section is prohibited. Each occurrence of non-compliance with these regulations is a separate violation.

Dated: August 15, 2003.

Craig Manson,

Assistant Secretary for Fish and Wildlife and Parks.

[FR Doc. 03–21332 Filed 8–22–03; 10:22 am]

BILLING CODE 4312–CX–P

ENVIRONMENTAL PROTECTION AGENCY

40 CFR Parts 52 and 81

[WV061–6031b; FRL–7549–2]

Approval and Promulgation of Air Quality Implementation Plans; West Virginia; Redesignation of the Follansbee PM_{10} Nonattainment Area to Attainment and Approval of the Associated Maintenance Plan

AGENCY: Environmental Protection Agency (EPA).

ACTION: Proposed rule.

SUMMARY: EPA proposes to approve a request from the State of West Virginia to redesignate the Follansbee area of Brooke County, West Virginia (Follansbee area) from nonattainment to attainment for the national ambient air quality standards (NAAQS) for particulate matter with an aerodynamic diameter less than or equal to a nominal 10 microns (PM_{10}). EPA is also approving the plan for maintaining the PM_{10} standard in the Follansbee area and contingency measures as revisions to the West Virginia State Implementation Plan (SIP). In the Final Rules section of this **Federal Register**, EPA is redesignating the Follansbee area to attainment and approving the State's SIP submittals of the maintenance plan and contingency measures as a direct final rule without prior proposal because the Agency views this as a noncontroversial submittal and anticipates no adverse comments. A more detailed description of the state submittal and EPA's evaluation are included in a Technical Support Document (TSD) prepared in support of this rulemaking action. A copy of the TSD is available, upon request, from the EPA Regional Office listed in the **ADDRESSES** section of this document. If no adverse comments are received in response to this action, no further activity is contemplated. If EPA receives adverse comments, the direct final rule will be withdrawn and all public comments received will be addressed in a subsequent final rule based on this proposed rule. EPA will not institute a second comment period. Any parties interested in commenting on this action should do so at this time.

DATES: Comments must be received in writing by September 26, 2003.

ADDRESSES: Comments may be submitted either by mail or electronically. Written comments should be mailed to Makeba A. Morris, Chief, Air Quality Planning Branch, Mailcode 3AP21, U.S. Environmental Protection Agency, Region III, 1650 Arch Street, Philadelphia, Pennsylvania 19103. Electronic comments should be sent either to *morris.makeba@epa.gov* or to *http://www.regulations.gov*, which is an alternative method for submitting electronic comments to EPA. To submit comments, please follow the detailed instructions described in the **SUPPLEMENTARY INFORMATION** section. Copies of the documents relevant to this action are available for public inspection during normal business hours at the Air Protection Division, U.S. Environmental Protection Agency, Region III, 1650 Arch Street, Philadelphia, Pennsylvania 19103; and the West Virginia Department of Environmental Protection, Division of Air Quality, 7012 MacCorkle Avenue, SE., Charleston, WV 25304–2943.

FOR FURTHER INFORMATION CONTACT: Ruth Knapp, (215) 814–2191, or by e-mail at *knapp.ruth@epa.gov*.

SUPPLEMENTARY INFORMATION:

For further information, please see the information provided in the direct final action, with the same title, that is located in the ''Rules and Regulations'' section of this **Federal Register** publication.

You may submit comments either electronically or by mail. To ensure proper receipt by EPA, identify the appropriate rulemaking identification number WV061–6031b in the subject line on the first page of your comment. Please ensure that your comments are submitted within the specified comment period. Comments received after the close of the comment period will be marked ''late.'' EPA is not required to consider these late comments.

1. *Electronically.* If you submit an electronic comment as prescribed below, EPA recommends that you include your name, mailing address, and an e-mail address or other contact information in the body of your comment. Also include this contact information on the outside of any disk or CD ROM you submit, and in any cover letter accompanying the disk or CD ROM. This ensures that you can be identified as the submitter of the comment and allows EPA to contact you in case EPA cannot read your comment due to technical difficulties or needs further information on the substance of your comment. EPA's policy is that EPA will not edit your comment, and any identifying or contact information provided in the body of a comment will be included as part of the comment that is placed in the official public docket. If EPA cannot read your comment due to technical difficulties and cannot contact you for clarification, EPA may not be able to consider your comment.

a. *By E-mail.* Comments may be sent by electronic mail (e-mail) to *morris.makeb@epa.gov*, attention WV–061–6031b. EPA's e-mail system is not an ''anonymous access'' system. If you send an e-mail comment directly without going through *Regulations.gov*, EPA's e-mail system automatically captures your e-mail address. E-mail addresses that are automatically captured by EPA's e-mail system are included as part of the comment that is placed in the official public docket.

b. *Regulations.gov.* Your use of *Regulations.gov* is an alternative method of submitting electronic comments to EPA. Go directly to *http://www.regulations.gov*, then select ''Environmental Protection Agency'' at the top of the page and use the ''go'' button. The list of current EPA actions available for comment will be listed. Please follow the online instructions for submitting comments. The system is an ''anonymous access'' system, which means EPA will not know your identity, e-mail address, or other contact information unless you provide it in the body of your comment.

c. *Disk or CD ROM.* You may submit comments on a disk or CD ROM that you mail to the mailing address identified in the **ADDRESSES** section of this document. These electronic submissions will be accepted in WordPerfect, Word or ASCII file format.

Avoid the use of special characters and any form of encryption.

2. *By Mail.* Written comments should be addressed to the EPA Regional Office listed in the **ADDRESSES** section of this document. For public commenters, it is important to note that EPA's policy is that public comments, whether submitted electronically or in paper, will be made available for public viewing at the EPA Regional Office, as EPA receives them and without change, unless the comment contains copyrighted material, confidential business information (CBI), or other information whose disclosure is restricted by statute. When EPA identifies a comment containing copyrighted material, EPA will provide a reference to that material in the version of the comment that is placed in the official public rulemaking file. The entire printed comment, including the copyrighted material, will be available at the Regional Office for public inspection.

Submittal of CBI Comments

Do not submit information that you consider to be CBI electronically to EPA. You may claim information that you submit to EPA as CBI by marking any part or all of that information as CBI (if you submit CBI on disk or CD ROM, mark the outside of the disk or CD ROM as CBI and then identify electronically within the disk or CD ROM the specific information that is CBI). Information so marked will not be disclosed except in accordance with procedures set forth in 40 CFR part 2.

In addition to one complete version of the comment that includes any information claimed as CBI, a copy of the comment that does not contain the information claimed as CBI must be submitted for inclusion in the official public regional rulemaking file. If you submit the copy that does not contain CBI on disk or CD ROM, mark the outside of the disk or CD ROM clearly that it does not contain CBI. Information not marked as CBI will be included in the public file and available for public inspection without prior notice. If you have any questions about CBI or the procedures for claiming CBI, please consult the person identified in the **FOR FURTHER INFORMATION CONTACT** section.

Considerations When Preparing Comments to EPA

You may find the following suggestions helpful for preparing your comments:

1. Explain your views as clearly as possible.
2. Describe any assumptions that you used.
3. Provide any technical information and/or data you used that support your views.
4. If you estimate potential burden or costs, explain how you arrived at your estimate.
5. Provide specific examples to illustrate your concerns.
6. Offer alternatives.
7. Make sure to submit your comments by the comment period deadline identified.
8. To ensure proper receipt by EPA, identify the appropriate regional file/rulemaking identification number in the subject line on the first page of your response. It would also be helpful if you provided the name, date, and **Federal Register** citation related to your comments. Please note that if EPA receives adverse comment on an amendment, paragraph, or section of this rule and if that provision may be severed from the remainder of the rule, EPA may adopt as final those provisions of the rule that are not the subject of an adverse comment.

Dated: August 18, 2003.

Donald S. Welsh,

Regional Administrator, Region III.

[FR Doc. 03–21911 Filed 8–26–03; 8:45 am]

BILLING CODE 6560–50–P

ENVIRONMENTAL PROTECTION AGENCY

40 CFR Part 272

[FRL–7479–4]

New Mexico: Incorporation by Reference of State Hazardous Waste Management Program

AGENCY: Environmental Protection Agency (EPA).

ACTION: Proposed rule.

SUMMARY: The EPA proposes to codify in the regulations entitled ''Approved State Hazardous Waste Management Programs'', New Mexico's authorized hazardous waste program. EPA will incorporate by reference into the Code of Federal Regulations (CFR) those provisions of the State regulations that are authorized and that EPA will enforce under the Solid Waste Disposal Act, commonly referred to as the Resource Conservation and Recovery Act (RCRA). In the ''Rules and Regulations'' section of this **Federal Register**, the EPA is codifying and incorporating by reference the State's hazardous waste program as an immediate final rule. EPA did not make a proposal prior to the immediate final rule because we believe these actions are not controversial and do not expect comments that oppose them. We have explained the reasons for this codification and incorporation by reference in the preamble to the immediate final rule. Unless we get written comments which oppose this incorporation by reference during the comment period, the immediate final rule will become effective on the date it establishes, and we will not take further action on this proposal. If we get comments that oppose these actions, we will withdraw the immediate final rule and it will not take effect. We will then respond to public comments in a later final rule based on this proposal. You may not have another opportunity for comment. If you want to comment on this action, you must do so at this time.

DATES: Send written comments by September 26, 2003.

ADDRESSES: Send written comments to Alima Patterson, Region 6 Authorization Coordinator, Grants and Authorization Section (6PD–G), Multimedia Planning and Permitting Division, EPA Region 6, 1445 Ross Avenue, Dallas, Texas 75202–2733, Phone number: (214) 665–8533.

FOR FURTHER INFORMATION CONTACT: Alima Patterson at (214) 665–8533 at the address listed in **ADDRESSES**.

SUPPLEMENTARY INFORMATION: For additional information, please see the immediate final rule published in the ''Rules and Regulations'' section of this **Federal Register**.

Dated: March 27, 2003.

Lawrence E. Starfield,

Acting Regional Administrator, EPA Region 6.

[FR Doc. 03–21595 Filed 8–26–03; 8:45 am]

BILLING CODE 6560–50–P

ENVIRONMENTAL PROTECTION AGENCY

40 CFR Part 272

[FRL–7479–2]

Oklahoma: Incorporation by Reference of State Hazardous Waste Management Program

AGENCY: Environmental Protection Agency (EPA).

ACTION: Proposed rule.

SUMMARY: The EPA proposes to codify in the regulations entitled ''Approved State Hazardous Waste Management Programs'', Oklahoma's authorized hazardous waste program. EPA will incorporate by reference into the Code of Federal Regulations (CFR) those provisions of the State regulations that are authorized and that EPA will

enforce under the Solid Waste Disposal Act, commonly referred to as the Resource Conservation and Recovery Act (RCRA). In the ''Rules and Regulations'' section of this **Federal Register**, the EPA is codifying and incorporating by reference the State's hazardous waste program as an immediate final rule. EPA did not make a proposal prior to the immediate final rule because we believe these actions are not controversial and do not expect comments that oppose them. We have explained the reasons for this codification and incorporation by reference in the preamble to the immediate final rule. Unless we get written comments which oppose this incorporation by reference during the comment period, the immediate final rule will become effective on the date it establishes, and we will not take further action on this proposal. If we get comments that oppose these actions, we will withdraw the immediate final rule and it will not take effect. We will then respond to public comments in a later final rule based on this proposal. You may not have another opportunity for comment. If you want to comment on this action, you must do so at this time.

DATES: Send written comments by September 26, 2003.

ADDRESSES: Send written comments to Alima Patterson, Region 6 Authorization Coordinator, Grants and Authorization Section (6PD–G), Multimedia Planning and Permitting Division, EPA Region 6, 1445 Ross Avenue, Dallas, Texas 75202–2733, Phone number: (214) 665–8533.

FOR FURTHER INFORMATION CONTACT: Alima Patterson at (214) 665–8533 at the address listed in **ADDRESSES**.

SUPPLEMENTARY INFORMATION: For additional information, please see the immediate final rule published in the ''Rules and Regulations'' section of this **Federal Register**.

Dated: March 27, 2003.

Lawrence E. Starfield,

Acting Regional Administrator, EPA Region 6.

[FR Doc. 03–21593 Filed 8–26–03; 8:45 am]

BILLING CODE 6560–50–P

FEDERAL COMMUNICATIONS COMMISSION

47 CFR Part 25

[IB Docket Nos. 02–34 and 02–54, FCC 03–102]

Satellite License Procedures

AGENCY: Federal Communications Commission.

ACTION: Notice of proposed rulemaking.

SUMMARY: In this document, the Commission invites comment on revisions to the bond requirement for satellite licensees, adopted in the *First Report and Order* in this proceeding. The intended purpose of this proceeding is to discourage parties from applying for satellite licenses for speculative reasons, without unreasonably discouraging applicants who intend to construct and launch their licensed satellite systems.

DATES: Comments are due on or before September 26, 2003. Reply comments are due on or before October 27, 2003.

ADDRESSES: All filings must be sent to the Commission's Secretary, Marlene H. Dortch, Office of the Secretary, Federal Communications Commission, The Portals, 445 Twelfth Street, SW., Room TW–A325, Washington, DC 20554.

FOR FURTHER INFORMATION CONTACT: Steven Spaeth, Satellite Division, International Bureau, (202) 418–1539.

SUPPLEMENTARY INFORMATION: This is a summary of the Commission's Further Notice of Proposed Rulemaking adopted April 23, 2003 and released May 19, 2003. The full text of this Commission decision is available for inspection and copying during normal business hours in the FCC Public Reference Room, 445 Twelfth Street, SW., Room CY–A257, Washington, DC 20554. The complete text of this decision may also be purchased from the Commission's copy contractor, Qualex International, Portals II, 445 Twelfth Street, SW., Room CY–B402, Washington, DC 20554.

Comments may be filed using the Commission's Electronic Comment Filing System (ECFS) or by filing paper copies. *See Electronic Filing of Documents in Rulemaking Proceedings,* 63 FR 24121, May 1, 1998. Comments filed through the ECFS can be sent as an electronic file via the Internet to *http://www.fcc.gov/e-file/ecfs.html.* Generally, only one copy of an electronic submission must be filed. If multiple docket or rulemaking numbers appear in the caption of this proceeding, however, commenters must transmit one electronic copy of the comments to each docket or rulemaking number referenced in the caption. In completing the transmittal screen, commenters should include their full name, Postal Service mailing address, and the applicable docket or rulemaking number. Parties may also submit an electronic comment by Internet e-mail. To get filing instructions for e-mail comments, commenters should send an e-mail to *ecfs@fcc.gov*, and should include the following words in the body of the message, ''get form <your e-mail address>.'' A sample form and directions will be sent in reply.

Parties who choose to file by paper must file an original and four copies of each filing. If more than one docket or rulemaking number appear in the caption of this proceeding, commenters must submit two additional copies for each additional docket or rulemaking number.

Paperwork Reduction Act: This NPRM does not contain any proposed new or modified reporting, recordkeeping, or other compliance requirements not previously adopted in this proceeding. *See* Paperwork Reduction Act of 1995, Public Law No. 104–13.

Initial Regulatory Flexibility Analysis: As required by the Regulatory Flexibility Act (RFA),[1] the Commission has prepared this present Initial Regulatory Flexibility Analysis (IRFA) of the possible significant economic impact on small entities by the policies and rules proposed in this Further Notice of Proposed Rulemaking. Written public comments are requested on this IRFA. Comments must be identified as responses to the IRFA and must be filed by the deadlines for comments on the Further Notice of Proposed Rulemaking provided above. The Commission will send a copy of the Further Notice of Proposed Rulemaking, including this IRFA, to the Chief Counsel for Advocacy of the Small Business Administration. *See* 5 U.S.C. 603(a). In addition, the Further Notice of Proposed Rulemaking and IRFA (or summaries thereof) will be published in the **Federal Register**. *See id.*

Need for, and Objectives of, the Proposed Rules. The objective of the proposed rules is to discourage parties from filing ''speculative'' satellite applications, *i.e.*, applying for a satellite license without intending to construct the satellite facilities. These rule revisions are needed because speculative satellite applications can delay or preclude other parties from obtaining a satellite license and providing service to the public.

Legal Basis. The proposed action is supported by sections 4(i), 7(a), 303(c), 303(f), 303(g), and 303(r) of the Communications Act of 1934, as amended, 47 U.S.C. 154(i), 157(a), 303(c), 303(f), 303(g), 303(r).

Description and Estimate of the Number of Small Entities to Which the Proposed Rules May Apply. The RFA directs agencies to provide a description

[1] *See* 5 U.S.C. 603. The RFA, *see* 5 U.S.C. 601 through 612, has been amended by the Small Business Regulatory Enforcement Fairness Act of 1996 (SBREFA), Public Law 104–121, Title II, 110 Stat. 857 (1996).

of, and, where feasible, an estimate of, the number of small entities that may be affected by the proposed rules, if adopted.[2] The RFA generally defines the term ''small entity ''as having the same meaning as the terms ''small business,'' ''small organization,'' and ''small governmental jurisdiction.''[3] In addition, the term ''small business'' has the same meaning as the term ''small business concern'' under the Small Business Act.[4] A small business concern is one which: (1) Is independently owned and operated; (2) is not dominant in its field of operation; and (3) satisfies any additional criteria established by the Small Business Administration (SBA).[5] A small organization is generally ''any not-for-profit enterprise which is independently owned and operated and is not dominant in its field.''[6] Nationwide, as of 1992, there were approximately 275,801 small organizations.[7] ''Small governmental jurisdiction'' generally means ''governments of cities, counties, towns, townships, villages, school districts, or special districts, with a population of less than 50,000.''[8] As of 1992, there were approximately 85,006 such jurisdictions in the United States.[9] This number includes 38,978 counties, cities, and towns; of these, 37,566, or 96 percent, have populations of fewer than 50,000.[10] The Census Bureau estimates that this ratio is approximately accurate for all governmental entities. Thus, of the 85,006 governmental entities, we estimate that 81,600 (91 percent) are small entities. Below, we further describe and estimate the number of small entity licensees that may be affected by the proposed rules, if adopted.

The rules proposed in this Notice of Proposed Rulemaking would affect satellite operators, if adopted. The Commission has not developed a definition of small entities applicable to satellite operators. Therefore, the applicable definition of small entity is generally the definition under the SBA rules applicable to Satellite Telecommunications.[11] This definition provides that a small entity is expressed as one with $11.0 million or less in annual receipts.[12] 1997 Census Bureau data indicate that, for 1997, 273 satellite communication firms had annual receipts of under $10 million. In addition, 24 firms had receipts for that year of $10 million to $24,999,990.[13]

In addition, Commission records reveal that there are approximately 240 space station operators licensed by this Commission. We do not request or collect annual revenue information, and thus are unable to estimate the number of licensees that would constitute a small business under the SBA definition. Small businesses may not have the financial ability to become space station licensees because of the high implementation costs associated with satellite systems and services.

Description of Projected Reporting, Recordkeeping, and Other Compliance Requirements. In this Further Notice of Proposed Rulemaking, the Commission invites comment on whether to revise the bond requirement adopted in the First Report and Order in this proceeding. None of the proposed revisions are intended to increase the projected reporting, record keeping, or other compliance requirements associated with the bond requirement.

Steps Taken to Minimize Significant Economic Impact on Small Entities, and Significant Alternatives Considered. The RFA requires an agency to describe any significant alternatives that it has considered in reaching its proposed approach, which may include the following four alternatives (among others): (1) The establishment of differing compliance or reporting requirements or timetables that take into account the resources available to small entities; (2) the clarification, consolidation, or simplification of compliance or reporting requirements under the rule for small entities; (3) the use of performance, rather than design, standards; and (4) an exemption from coverage of the rule, or any part thereof, for small entities. 5 U.S.C. 603(c).

We have attempted not to foreclose any option. In addition, we invite comment on allowing licensees to create an escrow account as an alternative to a bond requirement. We also invite interested parties to propose alternatives for a standard for a waiver of the bond requirement for licensees providing public safety services, including small entities.

Federal Rules That May Duplicate, Overlap, or Conflict With the Proposed Rules. None.

Summary of Further Notice of Proposed Rulemaking: In the *First Report and Order* in this proceeding, the Commission adopted a bond requirement for new satellite licensees. Under this requirement, licensees of geostationary satellite orbit (GSO) satellites must post a bond of $5 million, payable upon failure to meet a milestone. Licensees of non-geostationary satellite orbit (NGSO) satellite systems must post a bond of $7.5 million. Non-U.S.-licensed satellite operators seeking access to the U.S. market through a letter of intent must also post bonds in these amounts.

The Commission adopted these bond amounts on an interim basis pending additional comment. Accordingly, parties are invited to comment on the bond amount. Parties are also invited to comment on whether to allow satellite licensees to create an escrow account in lieu of posting a bond. Finally, the Commission solicited comment on revising the bond requirements for non-U.S.-licensed satellite operators to be consistent with the requirements for U.S. licensees.

Ordering Clauses

Accordingly, *it is ordered,* pursuant to sections 4(i), 7(a), 303(c), 303(f), 303(g), and 303(r) of the Communications Act of 1934, as amended, 47 U.S.C. 154(i), 157(a), 303(c), 303(f), 303(g), 303(r), that this Further Notice of Proposed Rulemaking in IB Docket No. 02–34 is hereby *adopted.*

It is further ordered that the Consumer Information Bureau, Reference Information Center, *shall send* a copy of this Further Notice of Proposed Rulemaking in IB Docket No. 02–34, including the Initial Regulatory Flexibility Analysis, to the Chief Counsel for Advocacy of the Small Business Administration.

[2] 5 U.S.C. 603(b)(3).

[3] *Id.* 601(6).

[4] 5 U.S.C. 601(3) (incorporating by reference the definition of ''small business concern'' in 15 U.S.C. 632). Pursuant to the RFA, the statutory definition of a small business applies ''unless an agency, after consultation with the Office of Advocacy of the Small Business Administration and after opportunity for public comment, establishes one or more definitions of such term which are appropriate to the activities of the agency and publishes such definition(s) in the *Federal Register.*'' 5 U.S.C. 601(3).

[5] Small Business Act, 15 U.S.C. 632 (1996).

[6] 5 U.S.C. 601(4).

[7] 1992 Economic Census, U.S. Bureau of the Census, Table 6 (special tabulation of data under contract to Office of Advocacy of the U.S. Small Business Administration).

[8] 5 U.S.C. 601(5).

[9] U.S. Dept. of Commerce, Bureau of the Census, ''1992 Census of Governments.''

[10] *Id.*

[11] ''This industry comprises establishments primarily engaged in providing point-to-point telecommunications services to other establishments in the telecommunications and broadcasting industries by forwarding and receiving communications signals via a system of satellites or reselling satellite telecommunications.'' Small Business Administration, 1997 NAICS Definitions, NAICS 513340.

[12] 13 CFR 120.121, NAICS code 513340.

[13] U.S. Census Bureau, 1997 Economic Census, Subject Service: Information, ''Establishment and Firm Size,'' Table 4, NAICS 513340 (Issued Oct. 2000).

Federal Communications Commission.

Marlene H. Dortch,

Secretary.

[FR Doc. 03–21650 Filed 8–26–03; 8:45 am]

BILLING CODE 6712–01–P

DEPARTMENT OF COMMERCE

National Oceanic and Atmospheric Administration

50 CFR Part 660

[I.D. 081303D]

Western Pacific Fishery Management Council; Public Meeting

AGENCY: National Marine Fisheries Service (NMFS), National Oceanic and Atmospheric Administration (NOAA), Commerce.

ACTION: Notice of public meeting/public hearing.

SUMMARY: The Western Pacific Fishery Management Council (Council) will meet on September 23, 2003, at 12 noon Hawaiian Standard Time to review the draft regulatory amendment to the Fishery Management Plan for the Pelagics Fishery of the Western Pacific (Pelagics FMP), which includes a range of alternatives (including no action) that permit some access by pelagic longline vessels to the southern fishing grounds during April and May while continuing to conserve sea turtles. The Council will also consider and may take final action on conservation measures intended to offset any potential harm that the Hawaii-based longline fishery could still pose to turtles. In addition, the Council will discuss potential modifications to the current northern prohibition on shallow-set longlining and may take initial action on this issue.

ADDRESSES: The Council meeting will be held via telephone conference call at the Council offices, 1164 Bishop Street, Suite 1400, Honolulu Hawaii 96813; telephone: 808–522–8220; Call in number: 1–808–527–2929 PIN 5785; FAX: 808–522–8226.

FOR FURTHER INFORMATION CONTACT: Kitty M. Simonds, Executive Director; telephone: 808–522–8220.

SUPPLEMENTARY INFORMATION: The agenda during the Council meeting will include the following items:

1. Pelagic Fisheries

A. Status of Biological Opinion, litigation and mediation

B. Final action on modifications to the current longline seasonal southern area closure.

C. Initial action to consider modifications to the current northern prohibition on shallow-set longlining.

In 2002, the Council developed a regulatory framework adjustment to the Pelagics FMP which was intended to minimize interactions with, and harm to, Pacific sea turtles. These measures stemmed from the non-discretionary Reasonable and Prudent Alternative contained in a Biological Opinion issued in 2001 by NMFS under the Endangered Species Act. Among the various measures implemented were a prohibition on shallow-set longline fishing north of the equator, and a seasonal area closure from 15° N. lat. to the equator, and from 145° W. long. to 180° long. to all fishing by pelagic longline vessels during April and May of each year. These measures have contributed to reductions in sea turtle interactions. However, the southern area closure exacts a significant economic burden on the Hawaii-based longline fleet because it is unable to access these fishing grounds when bigeye and yellowfin tuna stocks are seasonally abundant during April and May. At its 118th meeting in June 2003, the Council took initial action to consider modifying the southern area closure to reduce the economic impact on the longline fishery while continuing to conserve turtles. The Council also directed its staff to continue preparation of a regulatory amendment for potential changes to the Pelagics FMP, including a detailed analysis of a range of modifications to the southern area closure and the impacts of those alternatives on sea turtles, fisheries, and the environment. At its 119th meeting, the Council will review this draft regulatory amendment to the Pelagics FMP, which includes a range of alternatives (including no action) that permit some access by pelagic longline vessels to the southern fishing grounds during April and May while continuing to conserve sea turtles. The Council will also consider and may take final action on conservation measures intended to offset any potential harm that the Hawaii-based longline fishery could still pose to turtles. In addition, the Council will discuss potential modifications to the current northern prohibition on shallow-set longlining and may take initial action on this issue.

2. Other Business

Although non-emergency issues not contained in this agenda may come before the Council for discussion, those issues may not be the subject of formal Council action during this meeting. Council action will be restricted to those issues specifically listed in this document and to any issue arising after publication of this document that requires emergency action under section 305(c) of the Magnuson-Stevens Fishery Conservation and Management Act, provided that the public has been notified of the Council's intent to take final action to address the emergency.

Special Accommodations

This meeting is physically accessible to people with disabilities. Requests for sign language interpretation or other auxiliary aids should be directed to Kitty M. Simonds, (808)522–8220 (voice) or (808)522–8226 (fax), at least 5 days prior to the meeting date.

Authority: 16 U.S.C. 1801 *et seq.*

Dated: August 22, 2003.

Bruce C. Morehead,

Acting Director, Office of Sustainable Fisheries, National Marine Fisheries Service.

[FR Doc. 03–21953 Filed 8–26–03; 8:45 am]

BILLING CODE 3510–22–S

Notices

Federal Register

Vol. 68, No. 166

Wednesday, August 27, 2003

This section of the FEDERAL REGISTER contains documents other than rules or proposed rules that are applicable to the public. Notices of hearings and investigations, committee meetings, agency decisions and rulings, delegations of authority, filing of petitions and applications and agency statements of organization and functions are examples of documents appearing in this section.

DEPARTMENT OF COMMERCE

[I.D. 082203A]

Submission for OMB Review; Comment Request

The Department of Commerce has submitted to the Office of Management and Budget (OMB) for clearance the following proposal for collection of information under the provisions of the Paperwork Reduction Act (44 U.S.C. Chapter 35).

Agency: National Oceanic and Atmospheric Administration.

Title: Commercial Fisheries Employment Survey.

Form Number(s): None.

OMB Approval Number: None.

Type of Request: Regular submission.

Burden Hours: 583.

Number of Respondents: 7,000.

Average Hours Per Response: 5 minutes.

Needs and Uses: The data will be collected to estimate full- and part-time employment in commercial fisheries. This information is needed to identify how many individuals are affected by proposed commercial fishing regulations. The respondents will be commercial fishing vessel owners and captains.

Affected Public: Individuals or households, business or other for-profit organizations.

Frequency: One-time.

Respondent's Obligation: Voluntary.

OMB Desk Officer: David Rostker, (202) 395-3897.

Copies of the above information collection proposal can be obtained by calling or writing Diana Hynek, Departmental Paperwork Clearance Officer, (202) 482-0266, Department of Commerce, Room 6625, 14th and Constitution Avenue, NW, Washington, DC 20230 (or via the Internet at *dHynek@doc.gov*).

Written comments and recommendations for the proposed information collection should be sent within 30 days of publication of this notice to David Rostker, OMB Desk Officer, Room 10202, New Executive Office Building, Washington, DC 20503.

Dated: August 20, 2003.

Gwellnar Banks,

Management Analyst, Office of the Chief Information Officer.

[FR Doc. 03–21952 Filed 8–26–03; 8:45 am]

BILLING CODE 3510–22–S

DEPARTMENT OF COMMERCE

Foreign-Trade Zones Board

[Docket 29–2003]

Wacker Chemical Corporation—Application for Subzone Status; Amendment of Application and Extension of Comment Period

The application for subzone status at the Wacker Chemical Corporation in Adrian, Michigan, submitted by the Greater Detroit Foreign-Trade Zone, Inc. (68 FR 38009, 6/26/03), has been amended. The company has indicated that imported coloring matter and pigments (HTS 3204.12, 3204.17, 3204.19, 3206.19, 3206.20 and 3206.49) will be admitted to the zone in privileged foreign status.

The comment period for the case referenced above is being extended to September 25, 2003, to allow interested parties additional time in which to comment. Rebuttal comments may be submitted during the subsequent 15 day period, until October 10, 2003. Submissions (original and 3 copies) shall be addressed to the Board's Executive Secretary at one of the following addresses:

1. Submissions Via Express/Package Delivery Services: Foreign-Trade-Zones Board, U.S. Department of Commerce, Franklin Court Building—Suite 4100W, 1099 14th St. NW., Washington, DC 20005; or

2. Submissions Via the U.S. Postal Service: Foreign-Trade-Zones Board, U.S. Department of Commerce, FCB—Suite 4100W, 1401 Constitution Ave. NW., Washington, DC 20230.

Dated: August 19, 2003.

Dennis Puccinelli,

Executive Secretary.

[FR Doc. 03–21844 Filed 8–26–03; 8:45 am]

BILLING CODE 3510–DS–P

DEPARTMENT OF COMMERCE

Foreign-Trade Zones Board

[Docket 40–2003]

Foreign-Trade Zone 181–Akron/Canton, Ohio; Application for Expansion

An application has been submitted to the Foreign-Trade Zones Board (the Board) by the Northeast Ohio Trade & Economic Consortium (NEOTEC), grantee of FTZ 181, requesting authority to expand and reorganize its zone in Akron/Canton, and the seven-county northeast Ohio area, within and adjacent to the Cleveland Customs port of entry. The application was submitted pursuant to the provisions of the Foreign-Trade Zones Act (19 U.S.C. 81a–81u), and the regulations of the Board (15 CFR part 400). It was formally filed on August 15, 2003.

FTZ 181 was approved by the Board on December 23, 1991 (Board Order 546, 57 FR 41; 1/2/92). On March 13, 1998, the grant of authority was reissued to NEOTEC (Board Order 965, 63 FR 13837; 3/23/98). The zone was expanded in 1997 (Board Order 902, 62 FR 36044; 7/3/97), in 1998 (Board Order 968, 63 FR 16962; 4/7/98), in 1999 (Board Order 1053, 64 FR 51291; 9/22/99) and in 2002 (Board Order 1260, 67 FR 71933; 12/3/02). FTZ 181 currently consists of six sites in the northeast, Ohio area:

Site 1 (8 Parcels, 555 acres total)—158 acres within the Akron-Canton Regional Airport; 3 acres 8400 Port Jackson Avenue, Jackson Township; 21 acres at 3175, 3325 & 3375 Gilchrist Road, Mogadore; 30 acres at the Cuyahoga Falls Industrial Park, Cuyahoga Falls; 30 acres at the Terminal Warehouse facility, 1779 Marvo Drive; 20 acres at 1600 Terex Road, Hudson, operated by Kobelco Stewart Bolling, Inc; 190 acres at the Ascot Industrial Park, Akron; and, 103 acres at the Prosper Industrial Park, Stow, Summit County, Ohio;

Site 2 (3 Parcels, 1,371 acres total)—within the Youngstown-Warren Regional Airport area, Trumbull County, Ohio;

Site 3 (3 Parcels, 190 acres total)—124 acres—2 parcels located at the Columbiana County Port Authority port terminal facility: (19 acres) at 1250 St. George Street, East Liverpool, and (105 acres) at the Leetonia Industrial Park, State Route 344, Leetonia, Ohio; and 66 acres at the Intermodal Industrial Park Port Facility, Wellsville, Columbiana County, Ohio;

Site 4 (7 Parcels, 1,197 acres total)—91 acre industrial park located on the southeast side

of the city of Massillon, 840-acre Stark County Intermodal Facility, 12 acres located at 8045 Navarre Road, SW operated by Peoples Cartage, 40-acre Ford Industrial Park, adjacent to the City of Canton, 18 acres located at 2207 Kimball Road, SE., Canton, operated by Peoples Cartage, 158-acre Sawburg Commerce Industrial Park on the west side of Alliance, and 38-acre Detroit Diesel warehouse located at 515 11th Street, SE., Canton, Stark County, Ohio.

Site 5 (2,347 acres total)—located at the Mansfield Lahm Airport complex, State Route 13 at South Airport Road, Mansfield (includes the airport facility's four industrial parks, airport fueling facilities, and the 91-acre Gorman-Rupp facility, Mansfield, Ohio; and,

Site 6 (309 acres)—Kinder-Morgan/Pinney Dock and Transport Company, Inc. Facility located at 1149 East 5th Street, Ashtabula, Ohio.

The applicant is now requesting authority to update, expand and reorganize the zone as described below. The proposal also requests authority to reduce certain existing sites, and to add several new industrial park sites. Overall, the zone would be reduced by 217 acres.

Site 1 will be reorganized and expanded by deleting 7 acres from the southern portion of the Akron-Canton Regional Airport and adding it to a parcel south of Airport Drive; deleting 79 acres from the southeast and northwestern portions of the Ascot Industrial Park and adding 23 acres to the southern portion of the Park; deleting 18 acres from the rail line portion of the Prosper Industrial Park and adding 18 acres to the southeastern portion of the Park; and adding the 56-acres Akron-Fulton Municipal Airport and three new industrial park sites as follows: 55-acre Streetsboro Road Industrial Park; Hudson; 35-acre Freeway Drive Industrial Park, Macedonia; and, 23-acre Hy-Ko Business Park, Northfield. Overall, the reorganized Site 1 would cover 668 acres.

Site 2 will be reorganized by deleting 393 acres from the southern portion of the Youngstown-Warren Regional Airport and adding two new industrial parks as follows: 110-acre Lordstown Industrial Park, Trumbull County and the 100-acre Centerpointe Business Park, Austintown, Mahoning County, Ohio. The reorganized Site 2 would cover 1,188 acres.

Site 4: will be reorganized by deleting 21 acres from the southern portion of the Intermodal Facility and 31 acres from the northern and southern portions of the 91-acre MDF Industrial Park, Massillon. The applicant also requests to add the 52-acre Cloverleaf Park in Massillon. Total acreage will remain at 1,197.

Site 5: will be modified by deleting 308 acres from the southwestern portion of the Mansfield Lahm Airport. The reorganized Site 5 would cover 2,039 acres.

New Site 7: will involve the Interstate Commerce Center/Frost Road Commerce Center in Streetsboro (149 acres) and the Commerce Industrial Park (12 acres), Portage County, Ohio.

No specific manufacturing requests are being made at this time. Such requests would be made to the Board on a case-by-case basis.

In accordance with the Board's regulations, a member of the FTZ Staff has been designated examiner to investigate the application and report to the Board.

Public comment on the application is invited from interested parties. Submissions (original and 3 copies) shall be addressed to the Board's Executive Secretary at the address below.

1. Submissions via Express/Package Delivery Services: Foreign-Trade Zones Board, U.S. Department of Commerce, Franklin Court Building—Suite 4100W, 1099 14th Street NW., Washington, DC 20005; or

2. Submissions via the U.S. Postal Service: Foreign-Trade Zones Board, U.S. Department of Commerce, FCB—Suite 4100W, 1401 Constitution Avenue NW., Washington, DC 20230.

The closing period for their receipt is October 27, 2003. Rebuttal comments in response to material submitted during the foregoing period may be submitted during the subsequent 15-day period (to November 10, 2003).

A copy of the application and accompanying exhibits will be available for public inspection at the Foreign-Trade Zones Board's Executive Secretary at the first address listed above, and at the Office for the U.S. Department of Commerce Export Assistant Center, 600 Superior Avenue East, Suite 700, Cleveland, Ohio 44114.

Dated: August 15, 2003.

Dennis Puccinelli,

Executive Secretary.

[FR Doc. 03–21845 Filed 8–26–03; 8:45 am]

BILLING CODE 3510–DS–P

DEPARTMENT OF COMMERCE

Foreign-Trade Zones Board

[Docket 41–2003]

Proposed Foreign-Trade Zone—Lubbock, TX; Application and Public Hearing

An application has been submitted to the Foreign-Trade Zones (FTZ) Board (the Board) by the City of Lubbock, Texas, to establish a general-purpose foreign-trade zone at sites in Lubbock, Texas, adjacent to the Lubbock Customs port of entry. The FTZ application was submitted pursuant to the provisions of the FTZ Act, as amended (19 U.S.C. 81a–81u), and the regulations of the Board (15 CFR part 400). It was formally filed on August 18, 2003. The applicant is authorized to make the proposal under Senate Bill 691 of the 70th Legislature of the State of Texas (Regular Session, 1987), codified as Tex. Rev. Civ. Stat. Ann. Art. 144601.

The proposed zone would consist of two sites covering 2,393 acres in the Lubbock area of west Texas: *Site 1* (693 acres, 3 parcels)—within the 3,000-acre Lubbock International Airport complex, 5401 N. Martin Luther King, Jr., Blvd., Lubbock; and, *Site 2* (1,700 acres, 3 parcels)—within the 2,467-acre Reese Technology Center, 9801 Reese Blvd, Lubbock. The Lubbock International Airport complex is located within an Enterprise Zone. The Reese Technology Center was formerly the Reese Air Force Base and is currently being developed for commercial use as a business center for distribution, manufacturing and other industrial development. Site 1 is owned by the applicant and Site 2 is owned by the Lubbock Reese Redevelopment Authority.

The application indicates a need for zone services in the Lubbock, Texas, area. Several firms have indicated an interest in using zone procedures for warehousing/distribution activities. Specific manufacturing approvals are not being sought at this time. Requests would be made to the Board on a case-by-case basis.

In accordance with the Board's regulations, a member of the FTZ Staff has been designated examiner to investigate the application and report to the Board.

As part of the investigation, the Commerce examiner will hold a public hearing on September 23, 2003, at 1 p.m., City of Lubbock City Council Chambers, 1625—13th Street, Lubbock, Texas 79457.

Public comment on the application is invited from interested parties. Submissions (original and 3 copies) shall be addressed to the Board's Executive Secretary at one of the following addresses:

1. Submissions via Express/Package Delivery Services: Foreign-Trade Zones Board, U.S. Department of Commerce, Franklin Court Building—Suite 4100W, 1099—14th Street, NW., Washington, DC 20005; or

2. Submissions via the U.S. Postal Service: Foreign-Trade Zones Board, U.S. Department of Commerce, FCB—Suite 4100W, 1401 Constitution Avenue, NW., Washington, DC 20230.

The closing period for their receipt is October 27, 2003. Rebuttal comments in response to material submitted during the foregoing period may be submitted during the subsequent 15-day period (to November 10, 2003).

A copy of the application and accompanying exhibits will be available for public inspection at the Office of the Foreign-Trade Zones Board's Executive Secretary at the first address listed above, and at the Lubbock International Airport, 5401 Martin Luther King Boulevard, Lubbock, Texas 79401.

Dated: August 19, 2003.

Dennis Puccinelli,

Executive Secretary.

[FR Doc. 03–21843 Filed 8–26–03; 8:45 am]

BILLING CODE 3510–DS–P

DEPARTMENT OF COMMERCE

International Trade Administration

[A-570–827]

Certain Cased Pencils From the People's Republic of China: Extension of Time Limit for Preliminary Results of Antidumping Duty Administrative Review

AGENCY: Import Administration, International Trade Administration, Department of Commerce.

ACTION: Notice of Extension of Time Limits.

EFFECTIVE DATE: August 27, 2003.

FOR FURTHER INFORMATION CONTACT: Paul Stolz or Magd Zalok, AD/CVD Enforcement, Office 4, Group II, Import Administration, International Trade Administration, U.S. Department of Commerce, 14th Street and Constitution Avenue, NW., Washington, DC 20230; telephone (202) 482–4474 or (202) 482–4162, respectively.

TIME LIMITS:

Statutory Time Limits

Section 751(a)(3)(A) of the Tariff Act of 1930, as amended (the Act), requires the Department of Commerce (the Department) to make a preliminary determination within 245 days after the last day of the anniversary month of an order or finding for which a review is requested and a final determination within 120 days after the date on which the preliminary determination is published. However, if it is not practicable to complete the review within these time periods, section 751(a)(3)(A) of the Act allows the Department to extend the 245-day time limit for the preliminary determination to a maximum of 365 days and the time limit for the final determination to 180 days (or 300 days if the Department does not extend the time limit for the preliminary determination) from the date of publication of the preliminary determination.

Background

On January 22, 2003, the Department published a notice of initiation of administrative review of the antidumping duty order on certain cased pencils from the People's Republic of China, covering the period December 1, 2001, through November 30, 2002. *See Initiation of Antidumping and Countervailing Duty Administrative Reviews and Request for Revocation in Part*, 68 FR 3009, 3010 (January 22, 2003). The preliminary results are currently due no later than September 2, 2003.

Extension of Time Limit for Preliminary Results of Review

We determine that it is not practicable to complete the preliminary results of this review within the original time limit. Therefore the Department is extending the time limit for completion of the preliminary results by 120 days until no later than December 31, 2003. *See* Decision Memorandum from Thomas Futtner, Acting Office Director for Import Administration, Group II, Office IV to Holly A. Kuga, Acting Deputy Assistant Secretary for Import Administration, Group II, dated concurrently with this notice, which is on file in the Central Records Unit, Room B-099 of the Department's main building. We intend to issue the final results no later than 120 days after the publication of the preliminary results notice.

This extension is in accordance with section 751(a)(3)(A) of the Act.

Dated: August 19, 2003.

Holly A. Kuga,

Acting Deputy Assistant Secretary for Import Administration, Group II.

[FR Doc. 03–21904 Filed 8–26–03; 8:45 am]

BILLING CODE 3510–DS–S

DEPARTMENT OF COMMERCE

International Trade Administration

[A-602–805, A-484–802, A-419–802, A-588–864, A-791–818, A-570–889]

Notice of Initiation of Antidumping Duty Investigations: Electrolytic Manganese Dioxide From Australia, Greece, Ireland, Japan, South Africa and the People's Republic of China

AGENCY: Import Administration, International Trade Administration, Department of Commerce.

ACTION: Initiation of Antidumping Duty Investigations.

EFFECTIVE DATE: August 27, 2003.

FOR FURTHER INFORMATION CONTACT: Catherine Bertrand (Australia) at 202–482–3207, Doug Kirby (Greece) at 202–482–3782, John Drury (Ireland) at 202–482–0195, Brandon Farlander (Japan) at 202–482–0182, Matthew Renkey (South Africa) at 202–482–2312, Rachel Kreissl (PRC) at 202–482–0409 or Alex Villanueva at 202–482–3208, Import Administration, International Trade Administration, U.S. Department of Commerce, 14th Street and Constitution Avenue, NW., Washington, D.C. 20230.

SUPPLEMENTARY INFORMATION:

Initiation of Investigations

The Petition

On July 31, 2003, the Department of Commerce (''Department'') received an antidumping duty petition (''Petition'') filed in proper form by Kerr-McGee Chemical LLC (''Kerr-McGee or Petitioner''). Kerr-McGee is a domestic producer of electrolytic manganese dioxide (''EMD''). On August 13, 2003, Petitioner submitted information to supplement the Petition (''Supplemental Response''). Additionally, on August 13, 2003, the Department asked Petitioner to clarify the sales-below-cost allegations and the countries for which the allegations were made. *See Memorandum to the File from Alex Villanueva, Case Analyst through James C. Doyle, Program Manager; EMD: Regarding Sales- Below-Cost Allegations*, dated August 13, 2003. On August 14, 2003, Petitioner submitted a letter indicating that the sales-below-costs allegations were made only for Ireland, Japan and South Africa. Consequently, Petitioner did not request a sales-below-cost allegation for Australia and Greece. On August 20, 2003, Petitioner submitted revised lost sales and revenue information. In accordance with section 732(b) of the Tariff Act of 1930, as amended (''the Act''), Petitioner alleges imports of EMD from Australia, Greece, Ireland, Japan, South Africa and the People's Republic of China (''PRC'') are being, or are likely to be, sold in the United States at less than fair value within the meaning of section 731 of the Act, and that such imports are materially injuring, or threatening material injury to, the U.S. industry.

The Department finds that Petitioner filed its Petition on behalf of the domestic industry because it is an interested party as defined in section 771(9)(C) of the Act, and it has demonstrated sufficient industry support with respect to the investigations it is presently seeking. *See Determination of Industry Support for the Petition* section below.

Scope of the Investigations

These investigations cover all manganese dioxide (MnO_2) that has been manufactured in an electrolysis process, whether in powder, chip or plate form. Excluded from the scope are natural manganese dioxide (''NMD'') and chemical manganese dioxide (''CMD''), including high-grade chemical manganese dioxide (''CMD-U'').

The merchandise subject to this investigation is classified in the Harmonized Tariff Schedule of the United States (''HTSUS'') at subheading 2820.10.0000. The tariff classifications are provided for convenience and Customs purposes; however, the written description of the scope of these investigations is dispositive.

As discussed in the preamble to the Department's regulations, we are setting aside a period for parties to raise issues regarding product coverage. *See Antidumping Duties; Countervailing Duties; Final Rule*, 62 FR 27296, 27323 (May 19, 1997). The Department encourages all interested parties to submit such comments within 20 days of publication of this notice. Comments should be addressed to Import Administration's Central Records Unit, Room 1870, U.S. Department of Commerce, 14th Street and Constitution Avenue, NW., Washington, D.C. 20230. This period of scope consultations is intended to provide the Department with ample opportunity to consider all comments and consult with parties prior to the issuance of the preliminary determinations.

Determination of Industry Support for the Petition

Section 732(b)(1) of the Act requires that a petition be filed on behalf of the domestic industry. Section 732(c)(4)(A) of the Act provides that the Department's industry support determination, which is to be made before the initiation of the investigation, be based on whether a minimum percentage of the relevant industry supports the petition. A petition meets this requirement if the domestic producers or workers who support the petition account for: (i) at least 25 percent of the total production of the domestic like product; and (ii) more than 50 percent of the production of the domestic like product produced by that portion of the industry expressing support for, or opposition to, the petition. Moreover, section 732(c)(4)(D) of the Act provides that, if the petition does not establish support of domestic producers or workers accounting for more than 50 percent of the total production of the domestic like product, the Department shall: (i) poll the industry or rely on other information in order to determine if there is support for the petition, as required by subparagraph (A), or (ii) determine industry support using a statistically valid sampling method.

Section 771(4)(A) of the Act defines the ''industry'' as the producers of a domestic like product. Thus, to determine whether a petition has the requisite industry support, the statute directs the Department to look to producers and workers who produce the domestic like product. The International Trade Commission (''ITC''), which is responsible for determining whether ''the domestic industry'' has been injured, must also determine what constitutes a domestic like product in order to define the industry. While both the Department and the ITC must apply the same statutory definition regarding the domestic like product (section 771(10) of the Act), they do so for different purposes and pursuant to a separate and distinct authority. In addition, the Department's determination is subject to limitations of time and information. Although this may result in different definitions of the like product, such differences do not render the decision of either agency contrary to law. *See USEC, Inc. v. United States*, 132 F. Supp. 2d 1, 8 (Ct. Int'l Trade 2001), citing *Algoma Steel Corp. Ltd. v. United States*, 688 F. Supp. 639, 642–44 (Ct. Int'l Trade 1988).

Section 771(10) of the Act defines the domestic like product as ''a product which is like, or in the absence of like, most similar in characteristics and uses with, the article subject to an investigation under this title.'' Thus, the reference point from which the domestic like product analysis begins is ''the article subject to an investigation,'' *i.e.*, the class or kind of merchandise to be investigated, which normally will be the scope as defined in the Petition.

With regard to the domestic like product, Petitioner does not offer a definition of domestic like product distinct from the scope of the investigation. Based on our analysis of the information submitted in the Petition we have determined there is a single domestic like product, EMD, which is defined further in the ''Scope of the Investigations'' section above, and we have analyzed industry support in terms of that domestic like product. For more information on our analysis and the data upon which we relied, *see Antidumping Duty Investigation Initiation Checklist* (''*Initiation Checklist*''), dated August 20, 2003, Appendix II - Industry Support on file in the Central Record Unit (''CRU'') in room B-099 of the main Department of Commerce building.

In determining whether the domestic petitioner has standing, we considered the industry support data contained in the petition with reference to the domestic like product as defined above in the ''Scope of the Investigations'' section. To estimate 2002 production for all domestic EMD producers named in the Petition, Petitioner estimated production data using Roskill Information Service Ltd. and conservatively assumed that the remaining company produced to capacity. For purposes of determining industry support, Petitioner combined its year 2002 production data with Erachem Comilog, Inc. (''Erachem''), also a domestic producer, and supporter of the Petition. To estimate 2002 production for all other domestic EMD producers named in the Petition, Petitioner estimated production data using Roskill Information Services Ltd. and conservatively assumed the remaining company produced to capacity. This estimated production data was added to the actual production data detailed above to arrive at total estimated U.S. production of EMD for the year 2002 in short tons. *See* Petition at Exhibit 9 describing how this production data was estimated.

Using the data described above, the share of total estimated U.S. production of EMD in year 2002 represented by Petitioner and Erachem, a supporter of the Petition, equals over 50 percent of total domestic production. Therefore, the Department finds the domestic producers who support the Petition account for at least 25 percent of the total production of the domestic like product. In addition, as no domestic producers have expressed opposition to the Petition, the Department also finds the domestic producers who support the Petition account for more than 50 percent of the production of the domestic like product produced by that portion of the industry expressing support for, or opposition to, the Petition.

Therefore, we find that Petitioner has met the requirements of section 732(c)(4)(A) of the Act.

Export Price and Normal Value

The following are descriptions of the allegations of sales at less than fair value upon which the Department based its decision to initiate these investigations. The source or sources of data for the deductions and adjustments relating to U.S. and foreign market prices and cost of production (''COP'') and constructed value (''CV'') have been accorded

treatment as business proprietary information. Petitioner's sources and methodology are discussed in greater detail in the business proprietary version of the Petition and in our *Initiation Checklist*. We corrected certain information contained in the Petition's margin calculations; these corrections are set forth in detail in the *Initiation Checklist*. Should the need arise to use any of this information as facts available under section 776 of the Act in our preliminary or final determinations, we may re-examine this information and revise the margin calculations, if appropriate.

Periods of Investigation

The anticipated period of investigation (''POI'') for Australia, Greece, Ireland, Japan and South Africa will be July 1, 2002 through June 30, 2003. The anticipated POI for the PRC will be January 1, 2003 through June 30, 2003. *See* 19 CFR 351.204(b).

Export Price for All Countries

In calculating the U.S. price, Petitioner has relied exclusively on average unit value (''AUV'') data with respect to the HTSUS number 2820.10.0000. This HTS number is a ''basket category'' as it includes both subject and non-subject merchandise. This HTS number includes the subject merchandise, EMD, as well as non-subject merchandise, CMD, and possibly NMD[1]. Historically, the Department has not accepted basket category AUV's as the basis for U.S. price unless petitioners can provide evidence that the imports classified under the basket category overwhelmingly consist of subject merchandise. In this case, Petitioner has provided information on the record that supports its position that the overwhelming percentage of the imports from the subject countries are, in fact, within the scope of the investigation.

Petitioner used PIERS data to corroborate its contention that the imports under HTSUS number 2820.10.0000 are in fact overwhelmingly subject merchandise because PIERS provides greater product identification information than official U.S. Census data as reported on the International Trade Commission's Dataweb import statistics (''Dataweb'').

Petitioner points out that for the subject countries, in many instances, PIERS data clearly identifies EMD for individual shipments. For other shipments, PIERS often identifies them as simply ''Manganese Dioxide.'' These shipments could very well be of subject merchandise but PIERS' lack of specificity prevents a clear identification as such. Given the reluctance of the Department to rely on basket category AUV's for U.S. price, we requested that Petitioner demonstrate that the PIERS data captures the universe of subject merchandise sales during the POI. Additionally, for subject countries where a portion of total POI imports cannot be clearly identified as EMD, we requested that Petitioner demonstrate through other means that all (or at least an overwhelming majority) of the imports were in fact EMD. In order to show the completeness of the PIERS data, Petitioner provided a ratio of total imports according to the PIERS data, as divided by total imports as reported by Dataweb for each of the six countries in the petition. A review of the concordance between PIERS and Dataweb show that for five of the six countries, a substantial majority of the imports are EMD. *See* Supplemental Response at Exhibit A.

In the case of Ireland, the PIERS import volume is significantly less than the Dataweb volume. Petitioner suggests that the discrepancy between PIERS and Dataweb is due to systematic under-reporting of Irish EMD imports in PIERS. According to Petitioner, EMD imports from Ireland as shown in PIERS are likely mis-labeled as imports from the UK, because there is no EMD production in England, Scotland, or Wales. In addition, Petitioner believes that some imports from Ireland are entering the United States via Canada, and PIERS may have excluded such entries entirely as PIERS does not report on truck, plane, or railway entries. *See* Supplemental Response at pages 22–24. We found this explanation reasonable because we found no evidence to contradict these statements after conducting a review of the data submitted by Petitioner. *See Initiation Checklist*. Therefore, we find that there is a sufficient basis to accept the Irish AUV data as a basis for U.S. price.

As the second step in its analysis, Petitioner examined each PIERS import entry and compared those which specifically identified the imported product as EMD to those identifying another product, which was usually simply ''manganese dioxide,'' thereby generating another set of ratios.[2] For five countries (Australia, Greece, Ireland, Japan, and South Africa), the PIERS-based EMD-to-total-imports ratios show that at least approximately eight-seven percent of the entries in the basket HTS category were EMD, while two of the countries (South Africa and Greece) were one-hundred percent. Extrapolating the PIERS-based results to the Dataweb figures, the Department is able to adequately conclude that the overwhelming portion of imports reflected in the Dataweb figures are EMD, and are therefore adequate figures upon which to base export price for Australia, Greece, Ireland, Japan, and South Africa.

Finally, we note that the PIERS EMD-to-total imports ratio does not demonstrate that all imports from the PRC are EMD and that there is evidence on the record that the PRC does produce CMD and NMD. As a result, Petitioner provided further information to corroborate its argument that the Chinese imports to the United States were EMD. Specifically, Petitioner provided Dataweb statistics that showed that there were entries of Chinese merchandise in only three months of the POI to two different ports. Petitioner provided an affidavit to attest to the fact that the material was significantly EMD. *See* Petition at Exhibit 5. The volumes indicated in the affidavit match two of the three entries listed in the Dataweb statistics, and represent approximately eighty-nine percent of the volume entered into the United States under the relevant HTS number. Petitioner did not have any information regarding the third and final month's entry volume. However, the average unit value of the third month's entries is significantly higher than the others. Therefore, Petitioner notes that the inclusion of this data point is conservative since it lowers the overall margin. *See Initiation Checklist*. Therefore, we find that there is a sufficient basis to accept the Chinese AUV data as a basis for U.S. price.

Australia

Export Price

For a description of export price for Australia, *see Export Price for All*

[1] Note that Petitioner indicated at footnote 11 on page 6 of its July 31, 2003, petition, that NMD would be in the basket category HTS number 2820.10.0000. However, it would appear that NMD is properly classified under HTS 2602.00.0000, with 10-digit designations varying according to manganese weight. As a result, NMD should not be included in the basket category.

[2] Note that these ratios only counted those PIERS entries which could be positively identified as EMD in the numerator. However, the remaining entries may include EMD, so the actual EMD-to-total imports ratios may in fact be higher. Moreover, Petitioner also provided additional evidence that it is likely that only EMD is being imported under this HTS category. Petitioner provided information that CMD is produced only in Belgium and the PRC, while NMD is predominantly produced in Gabon, Ghana, Brazil, the PRC, Mexico, and India *See* Petition at Exhibit 9 and 13.

Countries above. Petitioner also adjusted this AUV data for foreign inland freight costs. *See* Petition at Exhibit 28 and *Initiation Checklist*.

Normal Value

With respect to normal value (''NV''), Petitioner provided information that there were no commercial quantity sales of EMD in the home market during the POI and that there is no viable third country market on which to base NV. *See* Petition at Exhibit 6 and 18. Therefore, Petitioner based NV on CV. *See* Supplemental Response at Exhibit K.

Petitioner calculated cost of manufacturing (''COM'') based on its own production experience, adjusted for known differences between costs incurred to produce EMD in the United States and Australia using publicly available data. To calculate interest, Petitioner relied upon information from Delta-Australia's corporate parent, Delta PLC, for the year 2002. Petitioner based profit on the 2002 experience of Ticor Limited, a producer of titanium dioxide, which Petitioner stated was similar to the production process of manganese dioxide. *See* Petition at page 21. We have accepted this methodology for purposes of this initiation. The price to CV comparison produced an estimated dumping margin of 47.01 percent.

Greece

Export Price

For a description of export price for Greece, *see Export Price for All Countries* above. Petitioner made no deduction for imputed credit expenses or foreign inland freight costs. *See Initiation Checklist*.

Normal Value

With respect to NV, Petitioner stated it did not know whether the home market for Greece was viable and home market prices were not reasonably available for Tosoh-Greece's sales of EMD during the POI. *See* Petition at page 23. However, Petitioner provided a third country price for EMD offered for sale in Belgium. The Petition provides evidence that these sales of EMD in the third-country market were made at prices below the fully absorbed COP, within the meaning of section 773(b) of the Act. We note, however, that Petitioner did not request a sales-below-cost of production investigation for Greece. Therefore, because the home market prices were unavailable, the home market viability is unknown and the largest third country market price is below COP, Petitioner's dumping allegation is based on CV.

Pursuant to section 773(b)(3) of the Act, cost of production (''COP'') consists of manufacture (''COM''), selling, general and administrative (SG&A) expenses, and packing. Petitioner calculated COM based on its own production experience, adjusted for known differences between costs incurred to produce EMD in the United States and Greece using publicly available data. To calculate interest, Petitioner relied upon information based upon the 2002 financial statement of Tosoh Corporation, the corporate parent of Tosoh-Greece. To calculate SG&A, petitioner relied upon the 2002 financial statement of a similar company for which data was reasonably available, Aluminum de Grece Industrial and Commercial S.A. (''Aluminum de Grece''). Petitioner chose Aluminum de Grece, an aluminum producer, because the production of aluminum is similar to EMD production.

Pursuant to sections 773(a)(4), 773(b) and 773(e) of the Act, Petitioner based NV for Greece on constructed value (''CV''). Petitioner calculated CV using the COM, SG&A and interest expense figures used to compute Greece home market costs. Consistent with section 773(e)(2) of the Act, the petitioner included in CV an amount for profit. For profit, Petitioner relied upon amounts reported in Aluminum de Grece's 2002 financial statement. See Supplemental Response at Exhibit L. Petitioner explained that the production of Aluminum De Grece is similar to the process of EMD as they are both energy intensive and involve purification of the ore feedstock and electrolysis. *See* Petition at page 24.

We are initiating this investigation based on constructed value of EMD from Greece calculated by Petitioner. Based on the comparison of the U.S. price to NV, the estimated dumping margin is 22.86 percent. *See Initiation Checklist*.

Ireland

U.S. Price

For a description of export price for Ireland, *see Export Price for All Countries* section above. Petitioner made adjustments for foreign inland freight to the AUV data. *See* Petition at Exhibits 3, 33 and *Initiation Checklist*.

Normal Value

With respect to NV, Petitioner relied on foreign market research and third country market price, as Mitsui-Ireland's EMD production was not sold in the home market during the POI and Petitioner demonstrated that all production was for export activities. *See* Petition at Exhibit 34.

Petitioner used Germany as the viable third country comparison market as Germany is the second largest export market for Irish EMD after the United States. Pursuant to section 773 of the Act, Petitioner retrieved data confirming that Mitsui-Ireland's EMD exports to Germany represent at least 22 percent of its total EMD exports to the United States during the period July 2000 through May 2003. Petitioner calculated an average net third-country price and adjusted for movement expenses from Ireland to Germany and for imputed credit expenses. *See* Petition at Exhibit 33 and Supplemental Response at Exhibit M.

Petitioner alleges that the sales of EMD in the third-country market were made at prices below the fully absorbed COP, within the meaning of section 773(b) of the Act. Pursuant to that section of the Act, COP consists of the COM, SG&A expenses, and packing. In the analysis of the third-country market price (above), market prices are inclusive of selling expenses, and therefore Petitioner used a COP also inclusive of SG&A. In regard to SG&A expense, Petitioner states it was unable to obtain specific and detailed financial data for Mitsui-Ireland, and believes it reasonable to use an SG&A ratio of the most similar Irish metals producer for which data was available - Glencar Mining, PLC. *See* Petition at Exhibit 56, page 16 and Supplemental Response at Exhibit M.

Petitioner used its own COM in the CV calculations with adjustments for known differences in production costs between Ireland and the U.S. for materials, energy and labor costs across the manufacturing process of EMD: ore handling (a.k.a. ''leaching''), electrolysis, and finishing.

For interest expense, Petitioner relied upon amounts reported for the Japanese parent company Mitsui Mining & Smelting Co., Ltd. (Mitsui Kinzoku)'s interest expense for the year ending March 2002. See Petition at Exhibit 55, page 14. Consistent with 773(e)(2) of the Act, Petitioner included in CV an amount for profit. However, Petitioner applied the ''zero'' profit rate of Glencar Mining, PLC. *See* Petition at Exhibit 56, pages 16–17.

Pursuant to sections 773(a)(4), 773(b) and 773(e) of the Act, Petitioner based NV for sales in Ireland on CV. *See* Supplemental Response at Exhibit M.

We have accepted this methodology for purposes of this initiation. The price to CV comparison produced an estimated dumping margin of 25.04% percent. *See Initiation Checklist*.

Japan

Export Price

For a description of export price for Japan, *see Export Price for All Countries* above. Petitioner also adjusted the AUV for foreign inland freight expenses based upon information obtained from a foreign market researcher. *See* Petition at Exhibit 7 and Supplemental Response at pages 28–29 and Exhibit H. Petitioner made no other adjustments to U.S. price, claiming this resulted in a conservative estimate.

Normal Value

With respect to NV, Petitioner relied on the same foreign market researcher to obtain price quotes for the foreign like product sold in Japan. Petitioner obtained from the market researcher price quote for alkaline grade, powder form EMD sold in the Japanese home market which the researcher indicates is the same type and grade sold in the United States. *See* Petition at Exhibit 7 and Supplemental Response Exhibit H. Petitioner adjusted this price by deducting total movement expenses. Petitioner made no deduction for imputed credit expenses. *See Initiation Checklist*. Petitioner claimed this was a conservative estimate, as foreign market research revealed payment terms in a range of periods.

Claiming that the Japanese producer's sales of the foreign like product were made at prices below the fully absorbed COP, within the meaning of section 773(b) of the Act, Petitioner requested that the Department initiate a country-wide sales-below-cost investigation. *See* Petitioner's August 14, 2003 letter. Pursuant to section 773(b)(3) of the Act, COP consists of the COM, SG&A expenses, and packing. Petitioner calculated COM based on Petitioner's own experience, adjusted for known differences based on the foreign market research of Japanese EMD producers' operations and publicly available data.

Based upon the comparison of the prices of the foreign like product in the home market to the calculated COP of the product, we find reasonable grounds to believe or suspect that sales of the foreign like product were made below the COP within the meaning of section 773(b)(2)(A)(i) of the Act. Accordingly, the Department is initiating a country-wide cost investigation.

Pursuant to sections 773(a)(4), 773(b) and 773(e) of the Act, Petitioner based NV for sales in Japan on CV. Petitioner calculated CV using the same COM, SG&A, and interest expense figures used to compute the COP. Consistent with section 773(e)(2) of the Act, Petitioner included in CV an amount for profit. Petitioner relied upon the profit ratio reported in Tosoh's 2002 annual report. *See* Petition at Exhibit 53 and Supplemental Response at page 30.

We have accepted this methodology for purposes of this initiation. The price to CV comparison produced an estimated dumping margin of 87.96 percent. *See Initiation Checklist*.

South Africa

Export Price

For a description of export price for South Africa, *see Export Price for All Countries* above. Petitioner adjusted this AUV data for foreign inland freight costs. *See* Petition at Exhibit 38.

Normal Value

With respect to NV, Petitioner provided a home market price obtained through foreign market research for EMD comparable to the product exported to the United States which serve as a basis for EP. Petitioner made no adjustments to this calculated average home market price. Petitioner also provided information demonstrating reasonable grounds to believe or suspect that sales of EMD in the home market were made at prices below the fully absorbed COP, within the meaning of section 773(b) of the Act, and requested that the Department conduct a country-wide sales-below-cost investigation.

Pursuant to section 773(b)(3) of the Act, COP consists of COM, SG&A expenses, and packing. Petitioner calculated COM based on its own production experience, adjusted for known differences between costs incurred to produce EMD in the United States and South Africa using publicly available data. To calculate interest, Petitioner relied upon information from Delta SA's corporate parent, Delta PLC, for the year 2002. To calculate SG&A, Petitioner relied upon the 2002 financial statement of the most similar company for which data was reasonably available, Highveld. Based upon a comparison of the prices of the foreign like product in the home market to the calculated COP of the product, we find reasonable grounds to believe or suspect that sales of the foreign like product were made below the COP, within the meaning of section 773(b)(2)(A)(i) of the Act. Accordingly, the Department is initiating a country-wide cost investigation.

Pursuant to sections 773(a)(4), 773(b) and 773(e) of the Act, Petitioner based NV for South Africa on CV. Petitioner calculated CV using the same COM, SG&A and interest expense figures used to compute South African home market costs. Consistent with section 773(e)(2) of the Act, Petitioner included in CV an amount for profit. For profit, Petitioner relied upon amounts reported in Highveld's 2002 financial statement.

We have accepted this methodology for purposes of this initiation. The price to CV comparison produced an estimated dumping margin of 24.82 percent. *See Initiation Checklist*.

PRC

Export Price

For a description of export price for the PRC, *see Export Price for All Countries* above. Petitioner also deducted an amount for foreign inland freight in the PRC from the starting U.S. Price. The calculation of foreign inland freight was derived using an inflated value used in the recent preliminary determination on polyvinyl alcohol from the PRC. *See* Petition at Exhibit 41 and Supplemental Response at page 37.

Normal Value

Petitioner asserts that the Department considers the PRC to be a non-market economy country (''NME'') and therefore, constructed NV based on the factors of production methodology pursuant to section 773(c) of the Act. In previous cases, the Department has determined that the PRC is an NME country. *See e.g., Notice of Final Determination of Sales at Less Than Fair Value: Barium Carbonate From the People's Republic of China*, 68 FR 46577 (August 6, 2003) and *Notice of Initiation of Antidumping Investigation: Floor-Standing, Metal-Top Ironing Tables and Certain Parts Thereof from the People's Republic of China*, 68 FR 44040 (July 25, 2003). In accordance with section 771(18)(C)(i) of the Act, the NME status remains in effect until revoked by the Department. The NME status of the PRC has not been revoked by the Department and, therefore, remains in effect for purposes of the initiation of this investigation. Accordingly, the NV of the product appropriately is based on factors of production valued in a surrogate market economy country in accordance with section 773(c) of the Act. In the course of this investigation, all parties will have the opportunity to provide relevant information related to the issues of the PRC's NME status and the granting of separate rates to individual exporters.

For NV, Petitioner based the factors of production, as defined by section 773(c)(3) of the Act, on its own consumption rates because information regarding Chinese producers' consumption rates is not reasonably available. *See* Supplemental Response

at pages 39–40. Thus, Petitioner has assumed, for purposes of the Petition, that producers in the PRC use the same inputs in the same quantities as Petitioner, adjusted for any known differences. Based on the information provided by Petitioner, we believe that its factors of production methodology represents information reasonably available to Petitioner and is appropriate for purposes of initiating this investigation.

Petitioner asserts that India is the most appropriate surrogate country for the PRC, claiming that India is: (1) a significant producer of comparable merchandise; and (2) at a level of economic development comparable to the PRC. Based on the information provided by Petitioner, we believe that Petitioner's use of India as a surrogate country is appropriate for purposes of initiating this investigation.

Petitioner based the factors of production (raw materials, labor, energy and packing), as defined by section 773(c)(3) of the Act, for EMD from the PRC on its own experience and adjusted for known differences. Pursuant to section 773(c)(4), Petitioner valued these factors using a variety of sources, including Monthly Statistics of Foreign Trade of India, Volumes I and II, Directorate General of Commercial Intelligence & Statistics (Monthly) (''MSFTI''), Chemical Weekly, the Department's factor valuation memoranda from other NME proceedings, Government of India and pricing lists from Indian chemical manufacturers.

For manganese dioxide ore, the main raw material, Petitioner provided a surrogate value based on the prices from the financial statements of Eveready Industries India, Ltd. (''Eveready India''), an Indian manufacturer of the subject merchandise. For certain chemical inputs (*e.g.*, sulfuric acid), Petitioner provided a surrogate value based on pricing information from Chemical Weekly. For other inputs such as caustic soda, lime (high calcium), harbonite 800S, Petitioner used pricing data from MSFTI to calculate surrogate values.

With regard to energy (electricity), Petitioner provided a surrogate value using Eveready India's financial statements. In addition, Petitioner provided a surrogate value for natural gas, a second energy source, using pricing information from the Gas Authority of India website.

Labor was valued using the regression-based wage rate for the PRC provided by the Department, in accordance with 19 CFR 351.408(c)(3). With regard to certain packing materials, Petitioner used MSFTI pricing data as the basis for the surrogate values.

Petitioner has provided values for inputs that represent almost 99 percent of the total cost of materials, energy, and packing in the NV calculation. Petitioner explained that the estimated value of the inputs for which it was unable to identify Indian surrogate values represents a minuscule portion of the NV calculation.

For some inputs, Petitioner did not provide a surrogate value using Indian imports statistics or any of the sources identified above. Instead, Petitioner used its own U.S. acquisition costs to value those inputs. Petitioner explained that the U.S. acquisition cost was used because there were no known differences in Chinese production processes and any differences would be immaterial. The inputs for which Petitioner used a U.S. acquisition cost included: packing materials and certain minor factors used in the production of EMD. *See Initiation Checklist* at Attachment V.

Petitioner contends that it has attempted to identify surrogate values for as many inputs as possible, including those that are common to other Chinese antidumping cases before the Department. Petitioner also explains that it has not been able to identify surrogate values for inputs that are unusual and used in very small amounts.

We have decided not to accept Petitioner's reliance on the U.S. acquisition costs to value the packing materials and certain minor factors of production because our practice in NME cases is to obtain surrogate values from a surrogate country. In the instant case, Petitioner did not provide surrogate values for certain inputs using information from a surrogate country. Therefore, in accordance with the Department's practice, we have not included those surrogates in the calculation of NV provided by Petitioner. By doing so, the Department is lowering the normal value, which is conservative. *See Notice of Initiation of Antidumping Duty Investigations: 4,4'-Diamino-2,2'-Stilbenedisulfonic Acid (DAS) and Stilbenic Fluorescent Whitening Agents (SFWA) from Germany, India, and the People's Republic of China*, 68 FR 34579 (June 10, 2003) and *Initiation Checklist*.

Eveready India was selected by Petitioner as the surrogate producer in India to compute factory overhead and SG&A expenses. *See Initiation Checklist*. Petitioner calculated the overhead ratio by dividing Eveready India's total overhead expenses (including ''Depreciation,'' ''Repairs to Machinery and Buildings,'' and ''Stores and Spares Consumed'') by Eveready India's material and energy expenses.

Petitioner excluded labor expenses from the denominator in the calculation of the overhead ratio on the grounds that Eveready India's Tea Division employs over 44,000 people while its Battery, Flashlights and Packet Tea Division (which produces EMD) employs 3,400 people. *See* Petition at 40. While the Department agrees it is appropriate to exclude non-EMD related labor expenses from the denominator of the overhead ratio, we do not agree it is appropriate to deduct EMD related labor expenses. Therefore, the Department added EMD-related labor expenses into the overhead ratio and COM calculations. The Department then applied the ratio to the labor expense inclusive COM as per its standard practice. With regard to SG&A, Petitioner calculated a ratio by dividing all the SG&A expense by Eveready India's total COM (inclusive of labor expenses). *See Initiation Checklist*.

Eveready India did not report a profit in its financial statements, therefore, Petitioner based the profit ratio on aggregate data published by the Reserve Bank of India (''RBI'') (*See Final Determination of the Antidumping Duty Investigation of Saccharin from the People's Republic of China*, (Issues and Decision Memoranda at Comment 9) 68 FR 27530 (May 20, 2003)), for the accounting period 2000–2001, the most current data available from the RBI. Petitioner calculated profit as a percentage of the COP for public companies and private companies, and then averaged these two ratios to obtain a single profit ratio. *See Initiation Checklist*.

After revising the NV calculation submitted by Petitioner as discussed above, the Department accepted Petitioner's calculation of NV for initiation purposes based on the above arguments which resulted in an estimated dumping margin of 31.38 percent. See Initiation Checklist at Attachment V.

Fair Value Comparisons

Based on the data provided by Petitioner, there is reason to believe imports of EMD from Australia, Greece, Ireland, Japan, South Africa and the PRC are being, or are likely to be, sold at less than fair value.

Allegations and Evidence of Material Injury and Causation

With respect to Australia, Greece, Ireland, Japan, South Africa and the PRC, Petitioner alleges that the U.S.

industry producing the domestic like product is being materially injured, or threatened with material injury, by reason of the individual and cumulated imports of the subject merchandise sold at less than NV.

Petitioner contends the industry's injured condition is evident in examining net operating income, profit, net sales volumes, production employment, as well as inventory levels, and reduced capacity utilization. *See* Petition at pages 41–60. Petitioner asserts its share of the market has declined from 2000 to 2002. *See* Petition at page 48. For a full discussion of the allegations and evidence of material injury, *see Initiation Checklist* at Appendix IV and Supplemental Response at pages 42–42.

Initiation of Antidumping Investigations

Based on our examination of the Petition covering EMD, we find it meets the requirements of section 732 of the Act. Therefore, we are initiating antidumping duty investigations to determine whether imports of EMD from Australia, Greece, Ireland, Japan, South Africa and the PRC are being, or are likely to be, sold in the United States at less than fair value. Unless this deadline is extended pursuant to section 733(b)(1)(A) of the Act, we will make our preliminary determinations no later than 140 days after the date of this initiation, or January 7, 2004.

Distribution of Copies of the Petition

In accordance with section 732(b)(3)(A) of the Act, a copy of the public version of the Petition has been provided to representatives of the governments of Australia, Greece, Ireland, Japan, South Africa and the PRC. We will attempt to provide a copy of the public version of the Petition to each exporter named in the Petition, as provided in section 19 CFR 351.203(c)(2).

International Trade Commission Notification

The ITC will preliminarily determine on September 12, 2003, whether there is reasonable indication that imports of EMD from Australia, Greece, Ireland, Japan, South Africa and PRC are causing, or threatening, material injury to a U.S. industry. A negative ITC determination for any country will result in the investigation being terminated with respect to that country; otherwise, these investigations will proceed according to statutory and regulatory time limits.

This notice is issued and published pursuant to section 777(i) of the Act.

Dated: August 20, 2003.

Jeffrey A. May,

Acting Assistant Secretary for Import Administration.

[FR Doc. 03–21903 Filed 8–26–03; 8:45 am]

BILLING CODE 3510–DS–S

DEPARTMENT OF COMMERCE

International Trade Administration

[A-533–820]

Certain Hot-Rolled Carbon Steel Flat Products from India: Extension of Time Limit for Preliminary Results of Antidumping Duty Administrative Review

AGENCY: Import Administration, International Trade Administration, Department of Commerce.

ACTION: Notice of Extension of Time Limits.

EFFECTIVE DATE: August 27, 2003.

FOR FURTHER INFORMATION CONTACT: Timothy Finn or Kevin Williams, AD/CVD Enforcement, Office 4, Group II, Import Administration, International Trade Administration, U.S. Department of Commerce, 14th Street and Constitution Avenue, NW, Washington, DC 20230; telephone (202) 482–0065 or (202) 482–2371, respectively.

TIME LIMITS:

Statutory Time Limits

Section 751(a)(3)(A) of the Tariff Act of 1930, as amended (the Act), requires the Department of Commerce (the Department) to make a preliminary determination within 245 days after the last day of the anniversary month of an order or finding for which a review is requested and a final determination within 120 days after the date on which the preliminary determination is published. However, if it is not practicable to complete the review within these time periods, section 751(a)(3)(A) of the Act allows the Department to extend the 245-day time limit for the preliminary determination to a maximum of 365 days and the time limit for the final determination to 180 days (or 300 days if the Department does not extend the time limit for the preliminary determination) from the date of publication of the preliminary determination.

Background

On January 22, 2003, the Department published a notice of initiation of administrative review of the antidumping duty order on certain hot-rolled carbon steel flat products from India, covering the period May 3, 2001 through November 30, 2002. *See Initiation of Antidumping and Countervailing Duty Administrative Reviews and Request for Revocation in Part,* 68 FR 3009, 3010 (January 22, 2003). The preliminary results are currently due no later than September 2, 2003.

Extension of Time Limit for Preliminary Results of Review

We determine that it is not practicable to complete the preliminary results of this review within the original time limit. Therefore, the Department is extending the time limit for completion of the preliminary results by 62 days until no later than November 3, 2003. See Decision Memorandum from Thomas Futtner, Acting Office Director for Import Administration, Group II, Office IV to Holly A. Kuga, Acting Deputy Assistant Secretary for Import Administration, Group II, dated concurrently with this notice, which is on file in the Central Records Unit, Room B-099 of the Department's main building. We intend to issue the final results no later than 120 days after the publication of the preliminary results notice.

This extension is in accordance with section 751(a)(3)(A) of the Act.

Dated: August 18, 2003.

Holly A. Kuga,

Acting Deputy Assistant Secretary for Import Administration, Group II.

[FR Doc. 03–21905 Filed 8–26–03; 8:45 am]

BILLING CODE 3510–DS–S

DEPARTMENT OF COMMERCE

International Trade Administration

[A-475–059]

Notice of Initiation of Antidumping Duty Changed Circumstances Review: Pressure Sensitive Plastic Tape From Italy

AGENCY: Import Administration, International Trade Administration, Department of Commerce.

SUMMARY: In accordance with section 751(b) of the Tariff Act of 1930, as amended, (the Act) and 19 CFR 351.216 (2003), Tyco Adhesives Italia S.p.A. (Tyco) requested that the Department of Commerce (the Department) conduct a changed circumstances review of the antidumping duty order on pressure sensitive plastic tape (PSPT) from Italy. In response to this request, the Department is initiating a changed circumstances review of the above-referenced order.

EFFECTIVE DATE: August 27, 2003.

FOR FURTHER INFORMATION CONTACT: Zev Primor or Maisha Cryor, AD/CVD Enforcement, Group II, Office 4, Import Administration, International Trade Administration, U.S. Department of Commerce, 14th Street and Constitution Avenue, NW, Washington, DC 20230; telephone (202) 482–4114 or (202) 482–5831, respectively.

SUPPLEMENTARY INFORMATION:

Background

On July 3, 2003, Tyco requested that the Department conduct an expedited changed circumstances review of the antidumping duty order on PSPT from Italy pursuant to section 751(b)(1) of the Act and 19 CFR 351.221(c)(3)(ii). Tyco claims to be the successor-in-interest to Manuli Autoadesivi (Manuli), based on its May 8, 2001, purchase of Manuli Tapes[1], and, as such, claims that it is entitled to receive the same antidumping treatment as Manuli.

Scope of Review

Imports covered by the review are shipments of PSPT measuring 1 3/8 inches in width and not exceeding 4 millimeters in thickness, currently classifiable under items 3919.90.20 and 3919.90.50 of the Harmonized Tariff Schedule of the United States (HTSUS). HTSUS subheadings are provided for convenience and customs purposes. The written description remains dispositive as to the scope of the product coverage.

Initiation of Antidumping Duty Changed Circumstances Review

Pursuant to section 751(b)(1) of the Act, the Department will conduct a changed circumstances review upon receipt of information concerning, or a request from an interested party for a review of, an antidumping duty order which shows changed circumstances sufficient to warrant a review of the order. The information submitted by Tyco regarding a change in ownership of Manuli shows changed circumstances sufficient to warrant a review. *See* 19 CFR 351.216(c) (2003).

In antidumping duty changed circumstances reviews involving a successor-in-interest determination, the Department typically examines several factors including, but not limited to, changes in: (1) management; (2) production facilities; (3) supplier relationships; and (4) customer base. *See Brass Sheet and Strip from Canada: Notice of Final Results of Antidumping Administrative Review*, 57 FR 20460, 20462 (May 13, 1992) (*Canadian Brass*). While no single factor or combination of factors will necessarily be dispositive, the Department generally will consider the new company to be the successor to the predecessor company if the resulting operations are essentially the same as those of the predecessor company. *See, e.g., Industrial Phosphoric Acid from Israel: Final Results of Changed Circumstances Review*, 59 FR 6944, 6945 (February 14, 1994), and *Canadian Brass*, 57 FR 20460. Thus, if the record evidence demonstrates that, with respect to the production and sale of the subject merchandise, the new company operates as the same business entity as the predecessor company, the Department may assign the new company the cash deposit rate of its predecessor. *See, e.g., Fresh and Chilled Atlantic Salmon from Norway: Final Results of Changes Circumstances Antidumping Duty Administrative Review*, 64 FR 9979, 9980 (March 1, 1999). Although Tyco submitted information indicating, allegedly, that, with respect to subject merchandise, it operates in the same manner as its predecessor, that information is unclear and is lacking sufficient supporting documents. *See* Letter from the Department to Tyco, Re: ''Pressure Sensitive Plastic Tape from Italy: Changed Circumstances Review, Supplemental Questionnaire'' dated July 10, 2003. Concerning Tyco's request that the Department conduct an expedited antidumping duty changed circumstances review, the Department has determined that it would be inappropriate to expedite this action by combining the preliminary results of review with this notice of initiation, as permitted under 19 CFR 351.221(c)(3)(ii). Because the Department may need to seek additional information, we find that an expedited action is impracticable. Therefore, the Department is not issuing the preliminary results of its antidumping duty changed circumstances review at this time.

The Department will publish in the **Federal Register** a notice of preliminary results of antidumping duty changed circumstances review, in accordance with 19 CFR 351.221(b)(4) and 19 CFR 351.221(c)(3)(I). This notice will set forth the factual and legal conclusions upon which our preliminary results are based and a description of any action proposed based on those results. Pursuant to 19 CFR 351.221(b)(4)(ii), interested parties will have an opportunity to comment on the preliminary results of review. In accordance with 19 CFR 351.216(e), the Department will issue the final results of its antidumping duty changed circumstances review not later than 270 days after the date on which the review is initiated.

During the course of this antidumping duty changed circumstances review, we will not change the cash deposit requirements for the merchandise subject to review. The cash deposit will only be altered, if warranted, pursuant to the final results of this review. This notice of initiation is in accordance with sections 751(b)(1) of the Act and 19 CFR 351.221(b)(1) of the Department's regulations.

Dated: August 18, 2003.

Jeffrey May,

Acting Assistant Secretary for Import Administration.

[FR Doc. 03–21842 Filed 8–26–03; 8:45 am]

BILLING CODE 3510–DS–S

[1] On December 31, 1999, after merging with another company, Manuli changed its corporate name to Manuli Tapes S.p.A.

DEPARTMENT OF COMMERCE

National Institute of Standards and Technology

[Docket No. 030711167–3167–01]

Notice of Request for Submissions of Information Security Practices by Public and Private Sector Organizations

AGENCY: National Institute of Standards and Technology (NIST), Commerce.

ACTION: Notice.

SUMMARY: NIST invites public and private organizations to submit their information security practices for inclusion in its Computer Security Resource Center. The NIST Computer Security Resource Center (CSRC) Web site, located at *http://csrc.nist.gov*, houses security specific guidance and tools that are shared widely in support of improving security programs and fostering good security practice. Selected information security practices will be posted on the Federal Agency Security Practices (FASP) section of the CSRC Web page (*http://csrc.nist.gov/fasp*). FASP includes a variety of agency security practices, which have been successfully used by the submitters in implementing their information security programs. With the recognition that protection of the Nation's critical infrastructure is dependent upon effective information security solutions and to minimize vulnerabilities associated with a variety of threats, the broader sharing of such practices will enhance the overall security of the nation. Today's federal networks and systems are highly interconnected and interdependent with non-federal systems. Access to information security

practices in the public and private sector can be applied to enhance the overall performance of Federal information security programs.

DATES: Request period is open-ended. Submissions can be offered at any time.

ADDRESSES: Written submissions may be sent to Computer Security Division, ATTN: Information Security Practices, Mail Stop 8930, 100 Bureau Drive, Stop 8930, National Institute of Standards and Technology, Gaithersburg, MD 20899–8930. Electronic submissions should be sent to: *infosecpractices@nist.gov.* Materials accepted by NIST will be posted to its CSRC Web site at *http://csrc.nist.gov/pcig.*

FOR FURTHER INFORMATION CONTACT: Ms. Joan Hash, (301) 975–3357, National Institute of Standards and Technology, Attn: Computer Security Division, 100 Bureau Drive (Mail Stop 8930), Gaithersburg, MD 20899–8930, e-mail: *joan.hash@nist.gov.*

SUPPLEMENTARY INFORMATION: Under section 5131 of the Information Technology Management Reform Act of 1996 and sections 302–3 of the Federal Information Security Management Act of 2002 (FISMA) (Pub. L. 107–347), the Secretary of Commerce is authorized to approve standards and guidelines for Federal information systems and to make standards compulsory and binding for Federal agencies as necessary to improve the efficiency or security of Federal information systems. NIST is authorized to develop standards, guidelines, and associated methods and techniques for information systems, other than national security systems, to provide for adequate information security for agency operations and assets. The FISMA requires each Federal agency to develop, document, and implement an agency-wide information security program that will provide information security for the information and information systems supporting the operations and assets of the agency, including those provided or managed by another agency, contractor, or other source. The FISMA specifically tasked NIST to evaluate public and private sector security practices. This is done to improve the level of Federal security programs and to learn from public and private sector best practices.

NIST invites public and private organizations to submit their information security practices for inclusion in its Computer Security Resource Center. The NIST CSRC Web site, located at *http://csrc.nist.gov* specific guidance and tools that are shared widely in support of improving security programs and fostering good security practice. Selected information security practices will be posted on the FASP section of the CSRC Web page (*http://csrc.nist.gov/fasp*). FASP includes a variety of agency security practices, which have been successfully used by the submitters in implementing their information security programs. With the recognition that protection of the Nation's critical infrastructure is dependent upon effective information security solutions and to minimize vulnerabilities associated with a variety of threats, the broader sharing of such practices will enhance the overall security of the nation. Today's Federal networks and systems are highly interconnected and interdependent with non-Federal systems. Access to information security practices in the public and private sector can be applied to enhance the overall performance of Federal information security programs.

Submitters must indicate the source of the information security practices, such as an official organization Web site, or they may submit their information security practices accompanied by a management official's approval. Submitters may request that NIST sanitize the submission to mask the source of the material. NIST will review submissions for consistency with generally accepted security practices prior to posting. These practices may be found at *http://csrc.nist.gov/publications/*. Submissions must include a point of contact. NIST reserves the right to accept, post and remove submissions at its discretion. By submitting material, the submitter agrees that NIST may publicly disseminate such material, regardless of copyright. Submitters agree to inform NIST if the status of the submission changes (updated, discontinued, etc.). The preferred method of transmittal of the submissions is via e-mail to *infosecpractices@nist.gov.*

Policies and procedures may be submitted to NIST in any area of information security including, but not limited to: Accreditation, audit trails, authorization of processing, budget planning and justification, certification, contingency planning, data integrity, disaster planning, documentation, hardware and system maintenance, identification and authentication, incident handling and response, life cycle, network security, personnel security, physical and environmental protection, production input/output controls, security policy, program management, review of security controls, risk management, security awareness training, and education (to include specific course and awareness materials), and security planning.

Dated: August 21, 2003.

Hratch G. Semerjian,

Acting Deputy Director.

[FR Doc. 03–21948 Filed 8–26–03; 8:45 am]

BILLING CODE 3510–CN–P

DEPARTMENT OF COMMERCE

National Institute of Standards and Technology

Announcing a Meeting of the Information Security and Privacy Advisory Board

AGENCY: National Institute of Standards and Technology.

ACTION: Notice of meeting.

SUMMARY: Pursuant to the Federal Advisory Committee Act, 5 U.S.C. App., notice is hereby given that the Information Security and Privacy Advisory Board (ISPAB) will meet Tuesday, September 16, 2003, from 8:30 a.m. until 5 p.m., Wednesday, September 17, 2003, from 8:30 a.m. until 5 p.m. and on Thursday, September 18, from 8:30 a.m. until 1 p.m. All sessions will be open to the public. The Advisory Board was established by the Computer Security Act of 1987 (Pub. L. 100–235) and amended by the Federal Information Security Management Act of 2002 (Pub. L. 107–347) to advise the Secretary of Commerce and the Director of NIST on security and privacy issues pertaining to federal computer systems. Details regarding the Board's activities are available at *http://csrc.nist.gov/ispab/*.

DATES: The meeting will be held on September 16, 2003, from 8:30 a.m. until 5 p.m., September 17, 2003, from 8:30 a.m. until 5 p.m., and September 18, 2003, from 8:30 a.m. until 1 p.m.

ADDRESSES: The meeting will take place at the Bethesda Hyatt Regency Hotel, 7400 Wisconsin Avenue [One Bethesda Metro Center], Bethesda, MD 20814.

Agenda

—Welcome and Overview
—Session on Agencies Customer Service Management Work
—Session on the National Information Assurance Program Extension Activities
—Session on Acceptable Behavior of ''Touching the Browser''
—NIST Information Technology Laboratory Briefings
—Update by OMB on Privacy and Security Issues
—Briefing by Department of Homeland Security Office Privacy Officer

—Agenda Development for December 2003 ISPAB Meeting
—Wrap-Up

Note that agenda items may change without notice because of possible unexpected schedule conflicts of presenters.

Public Participation: The Board agenda will include a period of time, not to exceed thirty minutes, for oral comments and questions from the public. Each speaker will be limited to five minutes. Members of the public who are interested in speaking are asked to contact the Board Secretariat at the telephone number indicated below. In addition, written statements are invited and may be submitted to the Board at any time. Written statements should be directed to the ISPAB Secretariat, Information Technology Laboratory, 100 Bureau Drive, Stop 8930, National Institute of Standards and Technology, Gaithersburg, MD 20899–8930. It would be appreciated if 35 copies of written material were submitted for distribution to the Board and attendees no later than September 9, 2003. Approximately 15 seats will be available for the public and media.

FOR FURTHER INFORMATION CONTACT: Ms. Joan Hash, Board Secretariat, Information Technology Laboratory, National Institute of Standards and Technology, 100 Bureau Drive, Stop 8930, Gaithersburg, MD 20899–8930, telephone: (301) 975–3357.

Dated: August 21, 2003.

Hratch G. Semerjian,

Acting Deputy Director.

[FR Doc. 03–21949 Filed 8–26–03; 8:45 am]

BILLING CODE 3510–CN–P

DEPARTMENT OF COMMERCE

National Oceanic and Atmospheric Administration

[I.D. 082003C]

Atlantic Highly Migratory Species; Advisory Panels

AGENCY: National Marine Fisheries Service (NMFS), National Oceanic and Atmospheric Administration (NOAA), Commerce.

ACTION: Notice; Highly Migratory Species and Billfish Advisory Panel Meetings; Request for nominations.

SUMMARY: NMFS will hold a Highly Migratory Species Advisory Panel (HMS AP) meeting September 30, 2003, for Atlantic Shark management in Silver Spring, MD. Also, a joint meeting of the Atlantic HMS AP and the Atlantic Billfish Advisory Panel (Billfish AP) will be held February 9 through 11, 2004, in Silver Spring, MD. Additionally, NMFS solicits nominations for the HMS AP and the Billfish AP. The intent of these Advisory Panel meetings is to consider alternatives for the conservation and management of highly migratory species.

DATES: The HMS AP Shark management meeting will be held from 9:30 a.m. to 4:30 p.m. on September 30, 2003. The joint HMS-Billfish AP meeting will be held from 1 p.m. to 5 p.m. on Monday, February 9, 2004, from 8 a.m. to 5 p.m. on Tuesday, February 10, 2004, and from 8 a.m. to 5 p.m. on Wednesday, February 11, 2004.

Nominations must be submitted on or before October 10, 2003.

ADDRESSES: The AP meetings will be held at the Holiday Inn, 8777 Georgia Avenue (Rt. 97), Silver Spring, MD 20910. Phone: (301) 589–0800.

Nominations and requests for the AP Statement of Organization, Practices, and Procedures should be submitted in writing to Christopher Rogers, Chief, Highly Migratory Species Management Division, NMFS, 1315 East-West Highway, Silver Spring, MD, 20910. Nominations may be submitted by fax; (301) 713–1917.

FOR FURTHER INFORMATION CONTACT: Othel Freeman or Carol Douglas (301) 713–2347.

SUPPLEMENTARY INFORMATION:

Introduction

In accordance with the Magnuson-Stevens Fishery Conservation and Management Act, (Magnuson-Stevens Act), 16 U.S.C. 1801 *et seq.*, as amended by the Sustainable Fisheries Act, Public Law 104–297, Advisory Panels (AP) have been established to consult with NMFS in the collection and evaluation of information relevant to the HMS FMP (April 1999) and the Billfish FMP Amendment (April 1999). Nominations are being sought to fill one-third of the posts of the HMS AP for 3-year appointments, and one-half of the posts of the Billfish AP for 2-year appointments. The nomination process and appointments are required by the Statement of Organization, Practices, and Procedures for each AP. The purpose of the HMS AP is to advise and assist the Secretary of Commerce (Secretary) in the collection and evaluation of information relevant to any amendment to the HMS FMP. The HMS AP evaluates future management options for Atlantic tunas, swordfish, and sharks under the requirements of the Magnuson-Stevens Act.

The purpose of the Billfish AP is to advise and assist the Secretary in the collection and evaluation of information relevant to any amendment to the Billfish FMP. The Billfish AP evaluates future management options for Atlantic billfish under the requirements of the Magnuson-Stevens Act.

Procedures and Guidelines

A. Procedures for Appointing the Advisory Panels

Individuals with definable interests in the recreational and commercial fishing and related industries, environmental community, academia, governmental entities, and non-governmental organizations will be considered for membership in the AP.

Nominations are invited from all individuals and constituent groups. The nomination should include:

1. The name of the applicant or nominee and a description of their interest in highly migratory species (HMS) or one species in particular from among sharks, swordfish, tunas, and billfish;
2. A statement of background and/or qualifications;
3. The AP to which the applicant seeks appointment;
4. A written commitment that the applicant or nominee shall actively participate in good faith in the tasks of the AP; and
5. Outreach Resources.

Tenure for the HMS AP:

Member tenure will be for 3 years, with one-third of the members' terms expiring on the last day of each calendar year. All appointments will be for 3 years (36 months).

Tenure for the Billfish AP:

Member tenure will be for 2 years, with one-half of the terms expiring on the last day of each calendar year. All appointments will be for 2 years (24 months).

B. Participants

The HMS AP consists of not less than 23 members who are knowledgeable about the fisheries for all Atlantic HMS species. The Billfish AP consists of not less than nine members who are knowledgeable about the fisheries for all Atlantic billfish species. Nominations for each AP will be accepted to allow representation from recreational and commercial fishing interests, the conservation community, and the scientific community.

NMFS does not believe that each potentially affected organization or individual must necessarily have its own representative, but each area of interest must be adequately represented. The intent is to have a group that, as a

whole, reflects an appropriate and equitable balance and mix of interests given the responsibilities of each AP. Criteria for membership include one or more of the following: (a) experience in the recreational fishing industry involved in catching swordfish, tunas, billfish, or sharks; (b) experience in the commercial fishing industry for HMS; (c) experience in fishery-related industries (marinas, bait and tackle shops); (d) experience in the scientific community working with HMS; (e) representation of a private, non-governmental, regional, (non-Federal) state, national, or international organization representing marine fisheries, environmental, governmental or academic interests dealing with HMS.

Five additional members of the AP include one voting representative each of the New England Fishery Management Council, the Mid-Atlantic Fishery Management Council, the South Atlantic Fishery Management Council, the Gulf of Mexico Fishery Management Council, and the Caribbean Fishery Management Council. The AP also includes 22 *ex-officio* participants: 20 representatives of the constituent states and two representatives of the constituent interstate commissions: the Atlantic States Marine Fisheries Commission and the Gulf States Marine Fisheries Commission.

NMFS will provide the necessary administrative support, including technical assistance, for the AP. However, NMFS will not compensate participants with monetary support of any kind. Depending on availability of funds, members may be reimbursed for travel costs related to the AP meetings.

C. Meeting Schedule

Meetings of each AP will be held as frequently as necessary but are routinely held once each year in the Spring. Often the meetings are held jointly, and may be held in conjunction with other advisory panel meetings or public hearings.

The HMS AP meeting on September 30, 2003, will focus on Atlantic shark management. NMFS published a proposed rule and notice of availability of Draft Amendment 1 to the HMS FMP on August 1, 2003 (68 FR 45196). The 60-day comment period ends on September 30, 2003. Since the alternatives presented in Draft Amendment 1 apply only to management measures for Atlantic sharks, the HMS AP discussion will be limited to Atlantic shark management. There will be time for the public to comment on shark management at the end of the meeting.

The joint HMS-Billfish AP meeting in February 2004 will focus on management alternatives for Atlantic tunas, swordfish, sharks, and billfish. On July 9, 2003, NMFS published a notice of intent to prepare an Environmental Impact Statement for Amendment 2 to the HMS FMP and Amendment 2 to the Billfish FMP (68 FR 40907). Amendment 2 to the HMS FMP is intended to address issues regarding quota allocation of Atlantic bluefin tuna, swordfish, and sharks among and within domestic fishing categories, examine management alternatives to improve and streamline the current HMS limited access permit program, conduct a 5-year review of HMS essential fish habitat (EFH) identifications, and address exempted fishing and scientific research permitting issues consistent with rebuilding plans, the Magnuson-Stevens Act, Atlantic Tunas Convention Act (ATCA), and other relevant Federal laws. Amendment 2 to the Billfish FMP is intended to conduct a 5-year review of Atlantic billfish EFH identifications and address other issues as appropriate, consistent with the Magnuson-Stevens Act, ATCA, and other relevant Federal laws.

Special Accommodations

These meetings are physically accessible to people with disabilities. Requests for sign language interpretation or other auxiliary aids should be directed to Othel Freeman or Carol Douglas (*see* **FOR FURTHER INFORMATION CONTACT**) at least 7 days prior to the meeting.

Authority: 16 U.S.C. 971 *et seq.* and 1801 *et seq.*

Date: August 21, 2003.

Bruce C. Morehead,

Acting Director, Office of Sustainable Fisheries, National Marine Fisheries Service.

[FR Doc. 03–21951 Filed 8–26–03; 8:45 am]

BILLING CODE 3510–22–S

DEPARTMENT OF COMMERCE

National Oceanic and Atmospheric Administration

[I.D. 060903A]

Notice of Availability of Draft Stock Assessment Reports

AGENCY: National Marine Fisheries Service (NMFS), National Oceanic and Atmospheric Administration (NOAA), Commerce.

ACTION: Notice of availability; request for comments.

SUMMARY: NMFS revised the Alaska, Atlantic and Gulf of Mexico, and Pacific marine mammal stock assessment reports (SARs) in accordance with the Marine Mammal Protection Act (MMPA). Draft 2003 reports are available for public review and comment.

DATES: Comments must be received by November 25, 2003.

ADDRESSES: Send comments or requests for copies of reports to: Chief, Marine Mammal Conservation Division, Office of Protected Resources, National Marine Fisheries Service, 1315 East-West Highway, Silver Spring, MD 20910–3226, Attn: Stock Assessments. Comments may also be sent via facsimile (fax) to 301–713–0376. NMFS will not accept comments submitted via e-mail or Internet.

Copies of the Alaska Regional SARs may be requested from Robyn Angliss, Alaska Fisheries Science Center, NMFS, 7600 Sand Point Way, NE BIN 15700, Seattle, WA 98115–0070.

Copies of the Atlantic and Gulf of Mexico Regional SARs may be requested from Janeen Quintal, Northeast Fisheries Science Center, 166 Water St., Woods Hole, MA 02543 or Steven Swartz, Southeast Fisheries Science Center, 75 Virginia Beach Dr., Miami, FL 33149.

Copies of the Pacific Regional SARs may be requested from Cathy Campbell, Southwest Regional Office, NMFS, 501 West Ocean Boulevard, Long Beach, CA 90802–4213.

FOR FURTHER INFORMATION CONTACT: Tom Eagle, Office of Protected Resources, 301–713–2322, ext. 105, e-mail *Tom.Eagle@noaa.gov*; Robyn Angliss 206- 526–4032, e-mail Robyn.Angliss@noaa.gov, regarding Alaska regional stock assessments; Janeen Quintal, 508–495–2252, e-mail *Janeen.Quintal@noaa.gov*, regarding Northwest Atlantic regional stock assessments; Steven Swartz, 305–361–4487, e-mail *Steven.Swartz@noaa.gov*, regarding Mid-Atlantic and Gulf of Mexico regional stock assessments; or Cathy Campbell, 562–280–4060, e-mail *Cathy.E.Campbell@noaa.gov*, regarding Pacific regional stock assessments.

SUPPLEMENTARY INFORMATION:

Electronic Access

All stock assessment reports and the guidelines for preparing them are available via the Internet at *http://www.nmfs.noaa.gov/prot_res/PR2/Stock_Assessment_Program/sars.html*.

Background

Section 117 of the Marine Mammal Protection Act (MMPA) (16 U.S.C. 1361 *et seq.*) requires NMFS and the U.S. Fish and Wildlife Service (FWS) to prepare stock assessments for each stock of marine mammals that occurs in waters under the jurisdiction of the United States. These reports must contain information regarding the distribution and abundance of the stock, population growth rates and trends, estimates of annual human-caused mortality and serious injury from all sources, descriptions of the fisheries with which the stock interacts, and the status of the stock. Initial reports were completed in 1995.

The MMPA requires NMFS and FWS to review the SARs at least annually for strategic stocks and stocks for which significant new information is available and at least once every 3 years for non-strategic stocks. NMFS and the FWS are required to revise a SAR if the status of the stock has changed or can be more accurately determined. NMFS, in conjunction with the Alaska, Atlantic, and Pacific Scientific Review Groups, reviewed the status of marine mammal stocks as required and revised reports for which new information was available. A summary of notable changes is described for each region below. Also, each regional set of stock assessment reports and a summary table of the changes made for 2003 are available on the Internet (see electronic access) and may be requested in hard copy form (see **ADDRESSES**). NMFS solicits public comments on the draft Alaska, Atlantic and Gulf of Mexico, and Pacific reports.

Alaska Stocks

NMFS revised 14 reports for marine mammal stocks in the Alaska Region, and the remaining 18 reports were not revised. Most revisions included incorporating new abundance or mortality estimates into the reports and did not change the status of the stock.

Counts of northern fur seal pups in the Pribilof Islands declined more than 5 percent per year from 1998 to 2002. The abundance estimate of this stock is derived from pup counts and has also declined accordingly. The population estimate remains over 800,000 fur seals, direct human-caused mortality remains a small portion of the calculated PBR, and the stock remains identified as strategic due to its designation as depleted under the MMPA.

The abundance estimates for Pacific white-sided dolphins, Central North Pacific stock, and Dall's porpoise, Alaska stock, are more than 8 years old and are considered unreliable according to NMFS' guidelines for preparing marine mammal stock assessment reports (Wade and Angliss, 1997). In accordance with the guidelines, the PBR for Pacific white-sided dolphins has been changed to ''undefined''. The PBR for Dall's porpoise is not changed to ''undefined'' because recent surveys in part of the range suggest the population remains quite large, and a new abundance estimate is expected to be available in the near future. The recent surveys in a portion of the range are considered compelling evidence that the Dall's porpoise population in Alaska has not declined; therefore, continued use of the PBR is consistent with NMFS' guidelines for preparing marine mammal stock assessment reports.

For humpback whales, Central North Pacific stock, the report was revised to include abundance, mortality, and PBR estimates for the Southeast Alaska feeding aggregation as well as for the entire stock. This change was based upon a recommendation from the Alaska SRG because humpback whales encountered in Southeast Alaska are likely to be part of the single feeding aggregation.

Atlantic and Gulf of Mexico Stocks

The SARs for marine mammal stocks in the Atlantic Ocean, including the Gulf of Mexico, contained revisions in 37 reports, and 20 reports were not revised. Most revisions were minor updates to abundance or mortality estimates and did not change the status of the affected stock of marine mammals.

The new mean annual mortality estimate for common dolphins, Western North Atlantic stock, is 190, and the PBR for this stock remains 227. Consequently, the status of common dolphins, Western North Atlantic stock, was revised from strategic to non-strategic.

A new abundance estimate for Cuvier's beaked whale, Northern Gulf of Mexico stock, is included in the 2003 draft SAR, and this new abundance estimate raises the PBR for the stock from 0.2 to 0.6. The section of the report on Human-Caused Mortality was revised to indicate that mortality of beaked whales has been associated with noise-generating activities in the ocean, and there are many such activities within portions of the Gulf of Mexico where beak whales are distributed. The report leads to the conclusion that there is a potential for human-caused mortality to exceed the stock's PBR level; therefore, following a precautionary approach, the Status of Stock section of the SAR was revised to label this stock as strategic. This section was also revised to clarify that fishery-related mortality and serious injury remains unknown; however, such mortality and serious injury can be considered at insignificant levels approaching a zero mortality and serious injury rate.

Pacific Stocks

The Pacific SARs contain revised stock assessments for 42 Pacific marine mammal stocks under NMFS' jurisdiction. Reports on the remaining 14 Pacific region stocks were not revised. Most revisions consisted of updates to abundance or mortality estimates that did not affect the status of the stock or the classification of any fishery that interacts with the stock. Three revisions included more than minor updates.

NMFS reinstated pygmy sperm whales (CA/OR/WA stock) to the list of marine mammal stocks for which a SAR is produced. Reinstatement was prompted by recent strandings of pygmy sperm whales, which indicate that pygmy sperm whales occur in waters under US jurisdiction more than rarely.

Harbor porpoise (Monterey Bay stock) was re-classified from strategic to non-strategic. Re-classification resulted from reduced mortality incidental to set gillnet fisheries within Monterey Bay. In 2001, the State of California largely closed gillnet fishing in the range of harbor porpoise under emergency regulations and made these regulations permanent in 2002.

Short-finned pilot whales (CA/OR/WA stock) were re-classified from non-strategic to strategic. Although the point estimate for incidental mortality and serious injury decreased in this update, the minimum abundance estimates also decreased from 717 to 149. The reduction in abundance was due to no sightings of pilot whales in the 2001 survey. Because pilot whale distribution appears variable and is likely related to specific oceanographic conditions, the reduction in abundance is not likely an indication that the actual number of pilot whales has been reduced. NMFS has previously observed fluctuations in sightings (thus, fluctuations in abundance estimates) of pilot whales during abundance surveys. These fluctuations are likely due to pilot whale distribution being affected by specific oceanographic conditions that sometimes are within the survey area and sometimes not. Because NMFS has no biological basis to adjust this abundance estimate to account for fluctuations in oceanographic conditions, the abundance estimate is a pooled estimate that includes results

from surveys in 1996 and 2001. Thus, the lower abundance estimate likely reflects fluctuations in pilot whale distribution rather than fluctuations in the actual abundance of pilot whales.

Dated: August 19, 2003.

Donna Wieting,

Acting Director, Office of Protected Resources, National Marine Fisheries Service.

[FR Doc. 03–21859 Filed 8–26–03; 8:45 am]

BILLING CODE 3510–22–S

CONSUMER PRODUCT SAFETY COMMISSION

Public Meeting Concerning Upholstered Furniture Flammability Rulemaking

AGENCY: Consumer Product Safety Commission.

ACTION: Notice of public meeting.

SUMMARY: The Consumer Product Safety Commission (CPSC or Commission) will conduct a public meeting on Wednesday, September 24, 2003 to receive comments on the July 2003 CPSC staff briefing package on upholstered furniture flammability. The briefing package recommends that the Commission issue an advance notice of proposed rulemaking (ANPR) that could result in a mandatory flammability standard addressing upholstered furniture ignition by small open flames and/or smoldering cigarettes.[1] If the staff's recommendation was accepted, the Commission's ongoing proceeding under the Flammable Fabrics Act (FFA), 15 U.S.C. 1191–1204 addressing ignition of upholstered furniture by small open flame sources such as matches, cigarette lighters, and candles would be expanded to also include ignition by smoldering cigarettes.

The Commission invites oral presentations from individuals, associations, firms, and government agencies with information or comments related to the briefing package. The Commission will consider these presentations in its deliberations on the staff recommendation.

DATES: The meeting will begin at 9 a.m. on Wednesday, September 24, 2003. Requests to make oral presentations, and 10 copies of the text of the presentation, must be received by the CPSC Office of the Secretary no later than September 17, 2003. Persons making presentations at the meeting should provide an additional 25 copies for dissemination on the date of the meeting.

Presentation texts should identify the author's affiliation with, or employment or sponsorship by, any entity with an interest in the Commission rulemaking on upholstered furniture flammability.

The Commission reserves the right to limit the number of persons who make presentations and the duration of their presentations. To prevent similar presentations, groups may be directed to designate a spokesperson.

ADDRESSES: The meeting will be in room 420 of the East-West Towers Building, 4330 East-West Highway, Bethesda, MD. Requests to make oral presentations, and texts of oral presentations should be captioned ''Upholstered Furniture Flammability Rulemaking'' and be mailed to the Office of the Secretary, Consumer Product Safety Commission, Washington, DC 20207, or delivered to that office, room 502, 4330 East-West Highway, Bethesda, Maryland 20814. Requests and texts of oral presentations may also be submitted by facsimile to (301) 504–0127 or by e-mail to *cpsc-os@cpsc.gov.*

FOR FURTHER INFORMATION CONTACT: For information about the purpose or subject matter of this meeting contact Dale Ray, Project Manager, Directorate for Economics, U.S. Consumer Product Safety Commission, Washington, DC 20207; telephone (301) 504–7704; e-mail: *dray@cpsc.gov.* For information about the schedule for submission of requests to make oral presentations and submission of texts of oral presentations, contact Rockelle Hammond, Office of the Secretary, Consumer Product Safety Commission, Washington, DC 20207; telephone (301) 504–6833; fax (301) 504–0127; e-mail: *rhammond@cpsc.gov.*

SUPPLEMENTARY INFORMATION:

A. Background

Cigarette-ignitions of upholstered furniture have long been a leading cause of residential fire deaths, injuries and property damage. The Commission has extensively investigated this risk since the 1970s, when the CPSC staff prepared a draft proposed cigarette ignition standard. In 1977, a furniture industry group, the Upholstered Furniture Action Council (UFAC), established a voluntary industry program as an alternative to CPSC rulemaking. The UFAC voluntary guidelines were amended in 1983, and are widely followed among manufacturers today.

In 1993 the National Association of State Fire Marshals (NASFM) petitioned the Commission to issue rules concerning the flammability of upholstered furniture when exposed to smoldering ignition, small open flame ignition and large open flame ignition sources. In 1994 the Commission acted to deny the petition insofar as it concerned large open flame ignition sources, to defer it insofar as it concerned smoldering ignition sources and to grant it insofar as it concerned small open flame sources. In 2001 the NASFM withdrew its petition.

Based on a 1996 CPSC survey, more than 85 percent of currently manufactured upholstered furniture (including products from non-UFAC member firms) meets the UFAC guidelines. Further, CPSC laboratory tests indicate that more than 80 percent of currently manufactured upholstered furniture resists cigarette ignition. However, cigarette-ignited fires involving upholstered furniture not made with cigarette-resistant materials constitutes a substantial proportion of overall fire losses. Thus, while the cigarette ignition risk is attributable to a relatively small proportion of currently produced upholstered furniture, the estimated societal costs associated with this risk are large.

The CPSC staff developed a draft small open flame standard for residential upholstered furniture that would prevent or limit fire growth following exposure to a small open flame.[2] The staff's draft standard does not directly address cigarette ignition resistance. However, CPSC laboratory testing suggests that flame retardant (FR) upholstery fabrics—identified by manufacturers as a likely means of limiting fire growth—would also reduce the risk of upholstered furniture fires ignited by smoldering cigarettes. About 80 percent of the projected safety benefits of a possible small open flame standard consist of reductions in cigarette fire losses.

The staff's October 2001 briefing package on upholstered furniture flammability presented options for possible continuing Commission action (*e.g.*, a notice of proposed rulemaking on the small open flame ignition risk), and with respect to possible new action (*e.g.*, an ANPR on the cigarette ignition risk).

In June 2002, the CPSC staff held a public meeting to obtain comments from stakeholders on all aspects of the Commission's proceeding on upholstered furniture. At the public meeting, the American Furniture Manufacturers Association (AFMA)

[1] The staff briefing package and other materials pertinent to this rulemaking are available on the CPSC Web site at: *http://www.cpsc.gov/library/foia/foia.html.*

[2] The most recent draft appears in the staff's October 2001 briefing package on upholstered furniture flammability. See fn. 1, supra, re obtaining this and other pertinent materials from the CPSC Web site.

stated their view that the Commission should promulgate a uniform national flammability standard for upholstered furniture. In a May 2, 2003 letter to Chairman Stratton, AFMA reiterated this position and recommended that a standard include requirements for upholstered furniture cigarette ignitability.

In a June 27, 2003 letter to Chairman Stratton, a group of six upholstery fabric manufacturers (the ''Fabric Coalition'') also expressed support for a national mandatory flammability standard for upholstered furniture. The Fabric Coalition asserted that its recommended approach to a national standard would address both cigarette- and open flame-related fire losses.

A number of factors bear on whether CPSC should directly address the risk of cigarette-ignited upholstered furniture fires. These include the large proportion of fire losses resulting from cigarette ignitions, the importance of reducing this risk in any effective remedial action, the feasibility of risk-reducing remedies, and the adequacy of existing voluntary standards to address the risk.

B. The Public Meeting

The purpose of the public meeting is to provide a forum for oral presentations on the CPSC staff briefing package on upholstered furniture flammability, with emphasis on the factors noted above.

Participation in the meeting is open. See the **DATES** section of this notice for information on making requests to give oral presentations at the meeting and on submitting copies of presentation texts.

Dated: August 22, 2003.

Sandra K. Bradshaw,

Deputy Secretary, Consumer Product Safety Commission.

[FR Doc. 03–21936 Filed 8–26–03; 8:45 am]

BILLING CODE 6355–01–P

DEPARTMENT OF DEFENSE

GENERAL SERVICES ADMINISTRATION

NATIONAL AERONAUTICS AND SPACE ADMINISTRATION

[OMB Control No. 9000–0129]

Federal Acquisition Regulation; Submission for OMB Review; Cost Accounting Standards Administration

AGENCIES: Department of Defense (DOD), General Services Administration (GSA), and National Aeronautics and Space Administration (NASA).

ACTION: Notice of request for public comments regarding an extension to an existing OMB clearance (9000–0129).

SUMMARY: Under the provisions of the Paperwork Reduction Act of 1995 (44 U.S.C. chapter 35), the Federal Acquisition Regulation (FAR) Secretariat has submitted to the Office of Management and Budget (OMB) a request to review and approve an extension of a currently approved information collection requirement concerning cost accounting standards administration. A request for public comments was published in the **Federal Register** at 68 FR 35634 on June 24, 2003. No comments were received.

Public comments are particularly invited on: Whether this collection of information is necessary for the proper performance of functions of the FAR, and whether it will have practical utility; whether our estimate of the public burden of this collection of information is accurate, and based on valid assumptions and methodology; ways to enhance the quality, utility, and clarity of the information to be collected; and ways in which we can minimize the burden of the collection of information on those who are to respond, through the use of appropriate technological collection techniques or other forms of information technology.

DATES: Comments may be submitted on or before September 26, 2003.

ADDRESSES: Submit comments, including suggestions for reducing this burden to the General Services Administration, FAR Secretariat (MVA), 1800 F Street, NW., Room 4035, Washington, DC 20405.

FOR FURTHER INFORMATION CONTACT: Edward Loeb, Office of Acquisition Policy, GSA, 501–0650.

SUPPLEMENTARY INFORMATION:

A. Purpose

FAR subpart 30.6 and the clause at 52.230–5 include pertinent rules and regulations related to the Cost Accounting Standards along with necessary administrative policies and procedures. These administrative policies require certain contractors to submit cost impact estimates and descriptions in cost accounting practices and also to provide information on CAS-covered subcontractors.

B. Annual Reporting Burden

Number of Respondents: 644.

Responses Per Respondent: 2.27.

Total Responses: 1,462.

Average Burden Hours Per Response: 200.85.

Total Burden Hours: 293,650.

Obtaining Copies of Proposals: Requesters may obtain a copy of the information collection documents from the General Services Administration, FAR Secretariat (MVA), Room 4035, Washington, DC 20405, telephone (202) 501–4755. Please cite OMB Control No. 9000–0129, Cost Accounting Standards Administration, in all correspondence.

Dated: August 20, 2003.

Laura G. Auletta,

Director, Acquisition Policy Division.

[FR Doc. 03–21841 Filed 8–26–03; 8:45 am]

BILLING CODE 6820–EP–P

DEPARTMENT OF DEFENSE

Department of the Air Force

Proposed Collection; Comment Request

AGENCY: Department of the Air Force, DoD.

ACTION: Notice.

In compliance with Section 3506(c)(2)(A) of the Paperwork Reduction Act of 1995, the Office of Admissions announces the proposed reinstatement of a public information collection and seeks public comment on provisions thereof. Comments are invited on: (a) Whether the proposed collection of information is necessary for the proper performance of the functions of the agency, including whether the information shall have practical utility; (b) the accuracy of the agency's estimate of the burden of the proposed information collection; (c) ways to enhance the quality, unity, and clarity of the information to be collected; (d) ways to minimize the burden of the information collection on respondents, including the use of automated collection techniques or other forms of information technology.

DATES: Consideration will be given to all comments received by October 31, 2003.

ADDRESSES: Written comments and recommendations on the proposed information collection should be sent to the United States Air Force Academy, Office of Admissions, 2304 Cadet Drive, Suite 236, USAFA, CO 80840.

FOR FURTHER INFORMATION CONTACT: To request more information on this proposed information collection or to obtain a copy of the proposed and associated collection instruments, please write to above address, or call the United States Air Force Academy, Office of Admissions, (719) 333–7291.

Title, Associated Form, and OMB Number: Air Force Academy Candidate

Personal Data Record, USAFA Form 146, OMB Number 0701–0064.

Needs and Uses: The information collection requirement is necessary to obtain data on candidate's background and aptitude in determining eligibility and selection to the Air Force Academy.

Affected Public: Individuals or households.

Annual Burden Hours: 3,617.

Number of Respondents: 7,233.

Responses per Respondent: 1.

Average Burden per Response: 30 Minutes.

Frequency: 1.

SUPPLEMENTARY INFORMATION:

Summary of Information Collection

The information collected on this form is required by 10 U.S.C. 9346. The respondents are students who are applying for admission to the United States Air Force Academy. Each student's background and aptitude is reviewed to determine eligibility. If the information on this form is not collected, the individual cannot be considered for admittance to the Air Force Academy.

Pamela Fitzgerald,

Air Force Federal Register Liaison Officer.

[FR Doc. 03–21846 Filed 8–26–03; 8:45 am]

BILLING CODE 5001–05–P

DEPARTMENT OF DEFENSE

Department of the Air Force

Proposed Collection; Comment Request

AGENCY: Department of the Air Force, DoD.

ACTION: Notice.

In compliance with Section 3506(c)(2)(A) of the Paperwork Reduction Act of 1995, Headquarters Air Force Recruiting Service announces the proposed extension of a currently approved public information collection and seeks public comment on the provisions thereof. Comments are invited on: (a) Whether the proposed collection of information is necessary for the proper performance of the functions of the agency, including whether the information shall have practical utility; (b) the accuracy of the agency's estimate of the burden of the proposed information collection; (c) ways to enhance the quality, unity, and clarity of the information to be collected; (d) ways to minimize the burden of the information collection on respondents, including the use of automated collection techniques or other forms of information technology.

DATES: Consideration will be given to all comments received by September 8, 2003.

ADDRESSES: Written comments and recommendations on the proposed information collection should be sent to Department of Defense, HQ AFRS/RSOC, 550 D Street West, Suite 1, Randolph AFB TX 78150–4527.

FOR FURTHER INFORMATION CONTACT: To request more information on this proposed information collection or to obtain a copy of the proposal and associated collection instruments, please write to the above addresses, or call HQ AFRS/RSOC, Officer Accessions Branch at (210) 652–4334.

Title, Associated Form, and OMB Number: Air Force Officer Training School Accession Forms, AETC Forms 1413 and 1422, OMB Number 0701–0080.

Needs and Uses: These forms are used by field recruiters and education counselors in the processing of Officer Training School (OTS) applications.

Affected Public: Civilian and Active Duty OTS Applicants.

Annual Burden Hours: 2,200.

Number of Respondents: 1,700.

Responses per Respondent: 1.

Average Burden per Response: 1 Hour (AETC Form 1413)/2 Hours (AETC Form 1422).

Frequency: On Occasion.

SUPPLEMENTARY INFORMATION:

Summary of Information Collection

Respondents are civilian and active-duty candidates applying for a commission in the United States Air Force. These forms provide pertinent information to facilitate selection of candidates for commission.

Pamela Fitzgerald,

Air Force Federal Register Liaison Officer.

[FR Doc. 03–21848 Filed 8–26–03; 8:45 am]

BILLING CODE 5001–05–P

DEPARTMENT OF DEFENSE

Department of the Air Force

Proposed Collection; Comment Request

AGENCY: Department of the Air Force, DoD.

ACTION: Notice.

In compliance with section 3506(c)(2)(A) of the Paperwork Reduction Act of 1995, Headquarters Air Force Recruiting Service announces the proposed extension of a currently approved public information collection and seeks public comment on the provisions thereof. Comments are invited on: (a) Whether the proposed collection of information is necessary for the proper performance of the functions of the agency, including whether the information shall have practical utility; (b) the accuracy of the agency's estimate of the burden of the proposed information collection; (c) ways to enhance the quality, unity, and clarity of the information to be collected; (d) ways to minimize the burden of the information collection on respondents, including the use of automated collection techniques or other forms of information technology.

DATES: Consideration will be given to all comments received by September 11, 2003.

ADDRESSES: Written comments and recommendations on the proposed information collection should be sent to Department of Defense, HQ AFRS/RSOC, 550 D Street West, Suite 1, Randolph AFB TX 78150–4527.

FOR FURTHER INFORMATION CONTACT: To request more information on this proposed information collection or to obtain a copy of the proposal and associated collection instruments, please write to the above addresses, or call HQ AFRS/RSOC, Officer Accessions Branch at (210) 652–4334.

Title, Associated Form, and OMB Number: Health Profession Accession Forms, AETC Forms 1402 and 1437, OMB Number 0701–0078.

Needs and Uses: These forms are used by field recruiters in the processing of health professions applicants applying for a commission in the United States Air Force.

Affected Public: Individuals or households.

Annual Burden Hours: 3,600.

Number of Respondents: 3,600.

Responses per Respondent: 1.

Average Burden per Response: 1 Hour.

Frequency: On Occasion.

SUPPLEMENTARY INFORMATION:

Summary of Information Collection

Respondents are civilian candidates applying for a commission in the United States Air Force as healthcare officers. These forms provide pertinent information to facilitate selection of candidates for commission.

Pamela Fitzgerald,

Air Force Federal Register Liaison Officer.

[FR Doc. 03–21849 Filed 8–26–03; 8:45 am]

BILLING CODE 5001–05–P

DEPARTMENT OF DEFENSE

Department of the Air Force

Intent To Grant an Exclusive Patent License

Pursuant to the provisions of part 404 of title 37, code of Federal Regulations, which implements Public Law 96–517, as amended, the Department of the Air Force announces its intention to grant MJS International, Inc., a corporation of Missouri, having a place of business at Chesterfield, Missouri, an exclusive license in any right, title and interest the Air Force has in:

U.S. Patent No. 6,267,039, issued 31 July 2001, entitled ''Aircraft Missile Hit Survivability Using Infrared Lamp and Sacrificial Support Structure,'' by Gregory J. Czarnecki.

A license for this patent will be granted unless a written objection is received within fifteen (15) days from the date of publication of this Notice. Written objection should be sent to: Air Force Materiel Command Law Office, AFMCLO/JAZ, 2240 B. Street, Rm 100, Wright-Patterson AFB OH 45433–7109. Telephone: (937) 255–2838; Facsimile (937) 255–7333.

Pamela Fitzgerald,

Air Force Federal Register Liaison Officer.

[FR Doc. 03–21847 Filed 8–26–03; 8:45 am]

BILLING CODE 5001–05–P

DEPARTMENT OF EDUCATION

[CFDA No. 84.153A]

Business and International Education Program; Notice Inviting Applications for New Awards for Fiscal Year (FY) 2004

AGENCY: Office of Postsecondary Education, Department of Education.

Purpose of Program: The Business and International Education (BIE) Program provides grants to institutions of higher education to enhance international business education programs and to expand the capacity of the business community to engage in international economic activities.

Eligible Applicants: Institutions of higher education that enter into agreements with trade associations, business enterprises, or trade organizations that are engaged in international economic activity.

Applications Available: August 27, 2003.

Deadline for Transmittal of Applications: November 7, 2003.

Deadline for Intergovernmental Review: January 7, 2004.

Estimated Available Funds: The Administration has requested $2,531,000 for the BIE Program new awards for FY 2004. The actual level of funding, if any, depends on final congressional action. However, we are inviting applications to allow enough time to complete the grant process, if Congress appropriates funds for this program.

Estimated range of awards: $50,000–$95,000.

Estimated average size of awards: $76,697.

Estimated number of awards: 33.

Note: The Department is not bound by any estimates in this notice.

Project Period: Up to 24 months.

Page Limit: The application narrative is where you, the applicant, address the selection criteria that reviewers use to evaluate your application. You must limit the narrative to the equivalent of no more than 40 pages, using the following standards:

- A ''page'' is 8.5″ x 11″, on one side only, with 1″ margins at the top, bottom, and both sides.
- Double space (no more than three lines per vertical inch) all text in the application narrative, including titles, headings, footnotes, quotations, references, and captions. However, you may single space all text in charts, tables, figures and graphs.
- Use a font that is either 12-point or larger or no smaller than 10 pitch (characters per inch). However, you may use a 10-point font in charts, tables, figures, and graphs. The page limit does not apply to the cover sheet; the budget section, including the narrative budget justification; the assurances and certifications; or the one-page abstract or the appendices. However, you must include your complete response to the selection criteria in the application narrative.

We will reject your application if—

- You apply these standards and exceed the page limit; or
- You apply other standards and exceed the equivalent of the page limit.

Applicable Regulations: (a) The Education Department General Administrative Regulations (EDGAR) in 34 CFR parts 74, 75, 77, 79, 80, 81, 82, 85, 86, 97, 98, and 99; and (b) The regulations for this program in 34 CFR parts 655 and 661.

SUPPLEMENTARY INFORMATION: Matching requirement: Under title VI, part B, section 613(d) of the Higher Education Act of 1965, as amended, a BIE Program grantee must provide no less than 50 percent of the total cost of the project in each fiscal year. Example: The institution's total costs of the proposed project will be $140,000 per year. The institution may request a grant in the amount of $70,000 or less. The institution must provide the remaining $70,000 in cash or in-kind contributions.

Priorities

Invitational Priorities

We are particularly interested in applications that meet the following invitational priorities.

Invitational Priority 1

Applications from institutions of higher education that propose educational projects that include activities that promote an understanding of economic education for K–12 educators.

Invitational Priority 2

Applications from institutions of higher education that propose educational projects that include activities focused on the targeted world areas of Central and South Asia, the Middle East, Russia, the Independent States of the former Soviet Union, and Africa. These projects should be integrated into the curricula of the home institution or institutions.

Under 34 CFR 75.105(c)(1) we do not give an application that meets the invitational priorities a competitive or absolute preference over other applications.

Application Procedures

The Government Paperwork Elimination Act (GPEA) of 1998, (Pub. L. 105–277) and the Federal Financial Assistance Management Improvement Act of 1999 (Pub. L. 106–107) encourage us to undertake initiatives to improve our grant processes. Enhancing the ability of individuals and entities to conduct business with us electronically is a major part of our response to these Acts. Therefore, we are taking steps to adopt the Internet as our chief means of conducting transactions in order to improve services to our customers and to simplify and expedite our business processes.

Note: Some of the procedures in these instructions for transmitting applications differ from those in the Education Department General Administrative Regulations (EDGAR) (34 CFR 75.102). Under the Administrative Procedure Act (5 U.S.C. 553) the Department generally offers interested parties the opportunity to comment on proposed regulations. However, these amendments make procedural changes only and do not establish new substantive policy. Therefore, under 5 U.S.C. 553(b) (A), the Secretary has determined that proposed rulemaking is not required.

We are requiring that applications for grants for FY 2004 under the BIE Program be submitted electronically using e-Application available through the Department's e-GRANTS system. The e-GRANTS system is accessible through its portal page at: *http://e-grants.ed.gov.*

An applicant who is unable to submit an application through the e-GRANTS system may submit a written request for a waiver of the electronic submission requirement. In the request, the applicant should explain the reason or reasons that prevent the applicant from using the Internet to submit the application. The request should be addressed to: Tanyelle Richardson, U.S. Department of Education, 1990 K Street, NW., Suite 6017, Washington, DC 20006–8521. Please submit your request no later than two weeks before the application deadline date.

If, within two weeks of the application deadline date, an applicant is unable to submit an application electronically, the applicant must submit a paper application by the application deadline date in accordance with the transmittal instructions in the application package. The paper application must include a written request for a waiver documenting the reasons that prevented the applicant from using the Internet to submit the application.

Pilot Project for Electronic Submission of Applications

In FY 2004, the Department is continuing to expand its pilot project of electronic submission of applications to include additional formula grant programs and additional discretionary grant competitions. The BIE Program—CFDA 84.153 is one of the programs included in the pilot project. If you are an applicant under the BIE Program, you must submit your application to us in electronic format or receive a waiver.

The pilot project involves the use of the Electronic Grant Application System (e-Application). Users of e-Application will be entering data on-line while completing their applications. You may not e-mail a soft copy of a grant application to us. The data you enter on-line will be saved into a database. We request your participation in e-Application. We shall continue to evaluate the success of e-Application and solicit suggestions for its improvement.

If you participate in e-Application, please note the following:

- When you enter the e-Application system, you will find information about its hours of operation. We strongly recommend that you do not wait until the application deadline date to initiate an e-Application package.
- You will not receive additional point value because you submit a grant application in electronic format, nor will we penalize you if you submit an application in paper format.
- You must submit all documents electronically, including the Application for Federal Education Assistance (ED 424), Budget Information—Non-Construction Programs (ED 524), and all necessary assurances and certifications.
- Your e-Application must comply with any page limit requirement described in this notice.
- After you electronically submit your application, you will receive an automatic acknowledgement, which will include a PR/Award number (an identifying number unique to your application).
- Within three working days after submitting your electronic application, fax a signed copy of the Application for Federal Education Assistance (ED 424) to the Application Control Center after following these steps:

1. Print ED 424 from e-Application.
2. The institution's Authorizing Representative must sign this form.
3. Place the PR/Award number in the upper right hand corner of the hard copy signature page of the ED 424.
4. Fax the signed ED 424 to the Application Control Center at (202) 260–1349.

- We may request that you give us original signatures on all other forms at a later date.
- *Application Deadline Date Extension in Case of System Unavailability:* If you are prevented from submitting your application on the application deadline date because the e-Application system is unavailable, we will grant you an extension of one business day in order to transmit your application electronically, by mail, or by hand delivery. For us to grant this extension—

1. You must be a registered user of e-Application, and have initiated an e-Application for this competition; and
2. (a) The e-Application system must be unavailable for 60 minutes or more between the hours of 8:30 a.m. and 3:30 p.m., Washington, DC time, on the application deadline date; or

(b) The e-Application system must be unavailable for any period of time during the last hour of operation (that is, for any period of time between 3:30 and 4:30 p.m., Washington, DC time) on the application deadline date.

The Department must acknowledge and confirm these periods of unavailability before granting you an extension. To request this extension or to confirm the Department's acknowledgement of any system availability, you must contact either (1) the person listed elsewhere in this notice under **FOR FURTHER INFORMATION CONTACT** or (2) the e-GRANTS help desk at 1–888–336–8930.

You may access the electronic grant application for the GPA Program at: *http://e-grants.ed.gov.*

FOR FURTHER INFORMATION CONTACT: Tanyelle Richardson, U.S. Department of Education, International Education and Graduate Programs Service, 1990 K Street NW., Suite 6066, Washington, DC 20006–8521. Telephone: (202) 502–7626 or via Internet: *tanyelle.richardson@ed.gov.*

If you use a telecommunications device for the deaf (TDD), you may call the Federal Information Relay Service (FIRS) at 1–800–877–8339.

Individuals with disabilities may obtain this document in an alternative format (*e.g.*, Braille, large print, audiotape, or computer diskette) on request to the program contact person listed under **FOR FURTHER INFORMATION CONTACT**.

Individuals with disabilities may obtain a copy of the application package in an alternative format by contacting that person. However, the Department is not able to reproduce in an alternative format the standard forms included in the application package.

Electronic Access to This Document

You may view this document, as well as all other Department of Education documents published in the **Federal Register**, in text or Adobe Portable Document Format (PDF) on the Internet at the following site: *http://www.ed.gov/legislation/FedRegister.*

To use PDF you must have Adobe Acrobat Reader, which is available free at this site. If you have questions about using PDF, call the U.S. Government Printing Office (GPO), toll free, at 1–888–293–6498; or in the Washington, DC, area at (202) 512–1530.

You may also view this document in PDF at the following site: *http://www.ed.gov/offices/HEP/iegps/.*

Note: The official version of this document is the document published in the **Federal Register**. Free Internet access to the official edition of the **Federal Register** and the Code of Federal Regulations is available on GPO Access at: *http://www.access.gpo.gov/nara/index.html.*

Program Authority: 20 U.S.C. 1130a–1130b.

Dated: August 21, 2003.

Sally L. Stroup,

Assistant Secretary, Office of Postsecondary Education.

[FR Doc. 03–21950 Filed 8–26–03; 8:45 am]

BILLING CODE 4000–01–P

DEPARTMENT OF EDUCATION

Advisory Committee on Student Financial Assistance; Meeting

AGENCY: Advisory Committee on Student Financial Assistance, Education.

ACTION: Notice of upcoming meeting.

SUMMARY: This notice sets forth the schedule and proposed agenda of a forthcoming meeting of the Advisory Committee on Student Financial Assistance. Individuals who will need accommodations for a disability in order to attend the meeting (*i.e.,* interpreting services, assistive listening devices, and/or materials in alternative format) should notify Ms. Hope M. Gray at 202–219–2099 or via e-mail at *hope.gray@ed.gov* no later than Friday, September 5. We will attempt to meet requests after this date, but cannot guarantee availability of the requested accommodation. The meeting site is accessible to individuals with disabilities. This notice also describes the functions of the Committee. Notice of this meeting is required under Section 10(a)(2) of the Federal Advisory Committee Act. This document is intended to notify the general public.

DATES AND TIMES: Thursday, September 11, 2003, beginning at 9 a.m. and ending at approximately 5 p.m.

ADDRESSES: The Holiday Inn on the Hill, 415 New Jersey Avenue, NW., the Congressional Room. Washington, DC 20001.

FOR FURTHER INFORMATION CONTACT: Dr. Brian K. Fitzgerald, Staff Director, Advisory Committee on Student Financial Assistance, Capitol Place, 80 F Street, NW., Suite 413, Washington, DC 20202–7582; (202) 219–2099.

SUPPLEMENTARY INFORMATION: The Advisory Committee on Student Financial Assistance is established under Section 491 of the Higher Education Act (HEA) of 1965 as amended by Public Law 100–50 (20 U.S.C. 1098). The Advisory Committee serves as an independent source of advice and counsel to the Congress and the Secretary of Education on student financial aid policy. Since its inception, the Committee has been charged with providing technical expertise with regard to systems of need analysis and application forms, making recommendations that result in the maintenance of access to postsecondary education for low- and middle-income students; conducting a study of institutional lending in the Stafford Student Loan Program; assisting with activities related to the 1992 reauthorization of the Higher Education Act of 1965; conducting a three-year evaluation of the Ford Federal Direct Loan Program (FDLP) and the Federal Family Education Loan Program (FFELP) under the Omnibus Budget Reconciliation Act (OBRA) of 1993; and assisting Congress with the 1998 reauthorization of the Higher Education Act.

The congressional mandate requires the Advisory Committee to conduct objective, nonpartisan, and independent analyses on important aspects of the student assistance programs under Title IV of the Higher Education Act. The Committee traditionally approaches its work from a set of fundamental goals: promoting access; ensuring program integrity; integrating delivery across the Title IV programs; eliminating or avoiding program complexity; and minimizing burden on students and institutions.

The most important charge of the Advisory Committee is to make recommendations to Congress and the Secretary that will lead to the maintenance and enhancement of access to postsecondary education for low- and middle-income students. In addition to carrying out its ongoing statutory charges, the Committee dedicated itself to articulating the current state of access by developing two reports on the condition of access, Access Denied: Restoring the Nation's Commitment to Equal Educational Opportunity and Empty Promises: The Myth of College Access in America. As a result of the findings in its access reports, the Committee submitted its access proposal to Congress in May 2003 in preparation for reauthorization of the Higher Education Act. The Committee will review and evaluate, from an access perspective, other reauthorization proposals and ideas emanating from Congress and the higher education community.

The proposed agenda includes discussion sessions with congressional staff and members of the higher education community focusing on reauthorization proposals and ideas related to: (a) The Committee's access partnership, (b) grants and work, (c) loans, (d) accountability, college costs and consumer information, and (e) address other Committee business. Space is limited and you are encouraged to register early if you plan to attend. You may register through the Internet at *ADV.COMSFA@ed.gov.* or *Tracy.Deanna.Jones@ed.gov.* Please include your name, title, affiliation, complete address (including Internet and e-mail—if available), and telephone and fax numbers. If you are unable to register electronically, you may mail or fax your registration information to the Advisory Committee staff office at (202) 219–3032. Also, you may contact the Advisory Committee staff at (202) 219–2099. *The registration deadline is Monday, September 8, 2003.*

The Advisory Committee will meet on Washington, DC on Thursday, September 11, 2003, from 9 a.m. until approximately 5 p.m.

Records are kept of all Committee proceedings, and are available for public inspection at the Office of the Advisory Committee on Student Financial Assistance, Capitol Place, 80 F Street, NW., Suite 413, Washington, DC from the hours of 9 a.m. to 5:30 p.m., weekdays, except Federal holidays.

Dated: August 20, 2003.

Brian K. Fitzgerald,

Staff Director, Advisory Committee on Student Financial Assistance.

[FR Doc. 03–21860 Filed 8–26–03; 8:45 am]

BILLING CODE 4000–01–M

DEPARTMENT OF EDUCATION

Meeting of the President's Board Advisors on Tribal Colleges and Universities

AGENCY: President's Board of Advisors on Tribal Colleges and Universities, U.S. Department of Education.

ACTION: Notice of meeting.

SUMMARY: This notice sets forth the schedule and proposed agenda of an upcoming meeting of the President's Board of Advisors on Tribal Colleges and Universities (the Board) and is intended to notify the general public of their opportunity to attend. This notice also describe the functions of the Board. Notice of the Board's meetings is required under Section 10(a)(2) of the Federal Advisory Committee Act and by the Board's charter.

AGENDA: The purpose of the meeting will be to review agencies' Three-Year Plans and decide on timeliness for and format of the Board's upcoming Report to the President.

DATES AND TIME: September 17, 2003–9 a.m. to 5 p.m. and September 18, 2003–9 a.m. to 2 p.m.

LOCATION: Prairie Knights Lodge, 7932 Highway 24, Fort Yates, ND 58538.

FOR FURTHER INFORMATION CONTACT: Betty Thompson, Special Assistant, White House Initiative on Tribal Colleges and Universities, U.S. Department of Education, Suite 408, 555 New Jersey Avenue, NW., Washington, DC 20208. Telephone 202–219–0704. Fax: 202–208–2174.

SUPPLEMENTARY INFORMATION: The Board is established by Executive Order 13270, dated July 3, 2002, to provide advice regarding the progress made by Federal agencies toward fulfilling the purposes and objectives of the order. The Board also provides recommendations to the President, through the Secretary of Education, on ways the Federal government can help tribal colleges: (1) Use long-term development, endowment building and planning to strengthen institutional viability; (2) improve financial management and security, obtain private sector funding support, and expand and complement Federal education initiatives; (3) develop institutional capacity through the use of new and emerging technologies offered by both the Federal and private sectors; (4) enhance physical infrastructure to facilitate more efficient operation and effective recruitment and retention of students and faculty; and (5) help implement the No Child Left Behind Act of 2001 and meet other high standards of educational achievement.

The general public is welcome to attend the September 17–18, 2003, meeting. However, space is limited and is available on a first-come, first-serve basis. Individuals who need accommodations for a disability in order to attend the meeting (i.e. interpreting services, assistive listening devices, materials in alternative format) should notify Betty Thompson at (202) 219–0704 no later than September 3, 2003. We will attempt to meet requests after this date, but cannot guarantee availability of the requested accommodation. The meeting site is accessible to individuals with disabilities.

A summary of the activities of the meeting and other related materials that are informative to the public will be available to the public within 14 days after the meeting. Records are kept of all Board proceedings and are available for public inspection at the White House Initiative on Tribal Colleges and Universities, United States Department of Education, Suite 408, 555 New Jersey Avenue, NW., Washington, DC 20208.

Dated: August 21, 2003.

Rod Paige,

Secretary, U.S. Department of Education.

[FR Doc. 03–21862 Filed 8–26–03; 8:45 am]

BILLING CODE 4000–01–M

DEPARTMENT OF ENERGY

[Docket No. PP–229]

Notice of Availability of Draft Environmental Impact Statement and Public Hearings for the Proposed Tucson Electric Power Company (TEP) Sahuarita-Nogales Transmission Line

AGENCY: Department of Energy (DOE).

ACTION: Notice of availability and public hearings.

SUMMARY: The Department of Energy (DOE) announces the availability of the ''Tucson Electric Power Company (TEP) Sahuarita-Nogales Transmission Line Draft Environmental Impact Statement'' (DOE/EIS–0336) for public review and comment. DOE also announces four public hearings on the Draft EIS. The Draft EIS was prepared pursuant to the National Environmental Policy Act of 1969 (NEPA), as amended, 42 U.S.C. 4321 *et seq.*, the Council on Environmental Quality NEPA regulations, 40 CFR parts 1500–1508, and the DOE NEPA regulations, 10 CFR part 1021. The Draft EIS evaluates the environmental impacts of the proposed action of granting a Presidential permit for the proposed project and reasonable alternatives, including the ''No Action'' alternative of denying the permit. The U.S. Forest Service (USFS), the Bureau of Land Management (BLM), and the U.S. Section of the International Boundary and Water Commission (USIBWC) are cooperating agencies in the preparation of this Draft EIS.

DATES: DOE invites interested Members of Congress, state and local governments, other Federal agencies, American Indian tribal governments, organizations, and members of the public to provide comments on the Draft EIS. The public comment period started with the publication in the **Federal Register** by the Environmental Protection Agency of the ''Notice of Availability'' of the Draft EIS on August 22, 2003, and will continue until October 14, 2003. Written and oral comments will be given equal weight, and DOE will consider all comments received or postmarked by that date in preparing the Final EIS. Comments received or postmarked after that date will be considered to the extent practicable.

Dates for the public hearings are:

1. September 25, 2003, 3 p.m. to 5 p.m., Green Valley, Arizona
2. September 25, 2003, 7 p.m. to 9 p.m., Green Valley, Arizona
3. September 26, 2003, 1 p.m. to 3 p.m., Nogales, Arizona
4. September 26, 2003, 5 p.m. to 7 p.m., Nogales, Arizona

Requests to speak at a specific public hearing should be received by Dr. Jerry Pell as indicated in the **ADDRESSES** section below on or before September 15, 2003. Requests to speak may also be made at the time of registration for the hearing(s). However, persons who have submitted advance requests to speak will be given priority if time should be limited during the meeting.

ADDRESSES: Requests to speak at the public hearings should be addressed to: Dr. Jerry Pell, Office of Fossil Energy (FE–27), U.S. Department of Energy, Washington DC 20585, or transmitted by phone: 202–586–3362, facsimile: 202–318–7761, or electronic mail at *Jerry.Pell@hq.doe.gov*. Please be aware that anthrax screening delays conventional mail delivery to DOE.

The locations of the public hearings are:

1. Both hearings on September 25, 2003, will be held at the Santa Rita Springs Facility, Green Valley Recreation Department, 921 W. Via Rio Fuerte, Green Valley, Arizona 85614–5711.

2. Both hearings on September 26, 2003, will be held in the County Board Hearing Room, Santa Cruz County Office Building, 2150 N. Congress Drive, Nogales, Arizona 85621.

Copies of the Draft EIS are available as (a) the Summary in paper format, accompanied by a CD–ROM that includes the entire Draft EIS, (b) the entire Draft EIS in paper format, accompanied by the CD–ROM, or (c) the CD–ROM only; requests for any of these should be addressed to Dr. Pell at any of the addresses above. Additionally, the Draft EIS is available on the Internet at *http://www.ttclients.com/tep*.

Written comments on the Draft EIS may be addressed to Dr. Jerry Pell as indicated in the **ADDRESSES** section of this notice or submitted on the project Web site at *http://www.ttclients.com/tep*.

FOR FURTHER INFORMATION CONTACT: For information on the proposed project or to receive a copy of the Draft EIS, contact Dr. Pell as indicated in the **ADDRESSES** section of this notice.

For general information on the DOE NEPA process, contact: Carol M. Borgstrom, Director, Office of NEPA Policy and Compliance (EH–42), U.S. Department of Energy, 1000

Independence Avenue, SW., Washington, DC 20585, Phone: 202–586–4600 or leave a message at 800–472–2756; Facsimile: 202–586–7031.

SUPPLEMENTARY INFORMATION:

Background

Executive Order (E.O.) 10485, as amended by E.O. 12038, requires that a Presidential permit be issued by DOE before electric transmission facilities may be constructed, maintained, operated, or connected at the U.S. international border. The E.O. provides that a Presidential permit may be issued after a finding that the proposed project is consistent with the public interest. In determining consistency with the public interest, DOE considers the impacts of the project on the reliability of the U.S. electric power system and on the environment. The regulations implementing the E.O. have been codified at 10 CFR 205.320–205.329. Issuance of the permit indicates that there is no Federal objection to the project, but does not mandate that the project be completed.

On August 17, 2000, TEP, a regulated public utility, filed an application for a Presidential permit with the Office of Fossil Energy of DOE and, on May 18, 2001, supplemented its application with its March 1, 2001 application to the Arizona Corporation Commission (ACC) for a Certificate of Environmental Compatibility. TEP proposes to construct two 345,000-volt (345-kV) transmission circuits on a single set of support structures across the U.S. international border in the vicinity of Nogales, Arizona. Both circuits would originate at TEP's existing South Substation located approximately 15 miles south of Tucson in the vicinity of Sahuarita, Arizona, and 1.4 miles east of Interstate Highway 19 (I–19), south of Pima Mine Road, in Pima County, Arizona. Near the U.S. international border, the proposed transmission lines would interconnect with the Citizens Communications system at the proposed Gateway Substation that would be constructed just west of Nogales, Arizona. South of the border, TEP would extend the line approximately 60 miles to the Santa Ana Substation, located in the City of Santa Ana, Sonora, Mexico, and owned by the Comisión Federal de Electricidad (CFE), the national electric utility of Mexico.

On July 10, 2001, DOE published in the **Federal Register** (66 FR 35950) a Notice of Intent (NOI) to prepare an EIS for the proposed project. The NOI informed the public of the proposed scope of the EIS, solicited public participation in the scoping process, and announced public scoping meetings that were held on July 30, 2001, in Sahuarita, Arizona, and on July 31, 2001, in Rio Rico, Arizona. The public scoping period initially closed on August 9, 2001, but then was extended to August 31, 2001 (**Federal Register** Notice of July 27, 2001, 66 FR 39154). Comments received during the public scoping process were used in preparing the Draft EIS.

Action Alternatives Considered

The action alternatives developed for the proposed project focus on alternative routes to interconnect TEP's South Substation with the proposed Gateway Substation. TEP's evaluation of interconnection schemes, scoping comments, and discussions with DOE resulted in three potentially viable alternative corridors for transmission interconnection in southern Arizona: the Western Corridor (the applicant's Preferred Alternative), the Central Corridor, and the Crossover Corridor. The Crossover Corridor was included for analysis in this Draft EIS based on public and tribal input received during the public scoping period and tribal consultations. Another alternative, the Eastern Corridor, was originally proposed by TEP but was eliminated from analysis as a reasonable alternative in this Draft EIS at TEP's request for reasons of reliability, constructability, existing encroachment into the right-of-way, and visual impacts.

NEPA requires the identification of the agency's preferred alternative or alternatives in a Draft EIS if one or more exists or, if one does not yet exist at the draft stage, in the Final EIS, 40 CFR part 1502.14(e). DOE reported in the NOI (see above) that TEP's Preferred Alternative is the Western Corridor. In light of TEP's preference and the ACC's decision to site TEP's proposed line only along the Western Corridor, DOE has designated the Western Corridor as DOE's preferred alternative at this time. DOE welcomes comments on this designation. The cooperating agencies have not designated their respective preferred alternatives at this time but will do so after their review of environmental information is completed. Identification of a preferred alternative in the Draft EIS does not preclude selection of a different or modified preferred alternative in the Final EIS. The final selection of preferred alternatives will be based on a balanced evaluation of the environmental consequences, public comment, and consideration of national policies.

No Action Alternative

The Council on Environmental Quality's (CEQ) regulations require that an agency ''include the alternative of no action'' as one of the alternatives it considers, 40 CFR 1502.14(d). For DOE and the cooperating agencies, ''no action'' means any one of the Federal agencies declining to grant approval for their area of jurisdiction. Each agency will make its own decision independently, so that it is possible that one or more agencies could grant permission for the proposal while another could deny permission.

The Draft EIS analyzes the potential environmental effects, or impacts, of TEP constructing and operating the proposed project in one of the three alternative transmission corridors, and also analyzes the No Action Alternative. CEQ's regulations require that an EIS contain a description of the environmental effects (both positive and negative) of the proposed alternatives. The regulations also distinguish between direct and indirect effects (40 CFR 1508.8). Direct effects are caused by an action and occur at the same time and place as the action. Indirect effects are reasonably foreseeable effects caused by the action that occur later in time or farther in distance. Both direct and indirect effects are addressed in the Draft EIS. CEQ's regulations also require that an EIS contain a description of the cumulative impacts of the proposed alternatives (40 CFR 1508.7). CEQ's regulations define cumulative impacts as those that result from the incremental impact of an action when added to other past, present, and reasonably foreseeable future actions, regardless of what agency or person undertakes such other actions. Cumulative impacts are addressed in the Draft EIS.

The Draft EIS presents information on the potential environmental effects of both the proposed transmission line construction and subsequent operation on land use and recreation, visual resources, biological resources, cultural resources, socioeconomics, geology and soils, water resources, air quality, noise, human health and environment, infrastructure, transportation, and minority and low income populations. The Draft EIS also includes a Floodplains and Wetlands Assessment, in accordance with E.O. 11988, *Floodplain Management*, and E.O. 11990, *Protection of Wetlands.*

Coronado National Forest Plan Amendment

The Coronado National Forest, U.S. Forest Service, has identified the need for amendments to its Land and

Resource Management Plan (Forest Plan) in order to implement any of the action alternatives identified in the Draft EIS. The amendments needed are for segments of all (three) action alternative corridor locations and for visual resources. The public comment period for the amendments will coincide with DOE's comment period. Comments on Forest Plan amendments should be sent to Mr. John M. McGee, Forest Supervisor, U.S. Forest Service, 300 West Congress, Tucson, Arizona 85701. Any inquiries regarding the Forest Plan or the amendments should be directed to the U.S. Forest Service.

Availability of the Draft EIS

DOE has distributed copies of the Draft EIS to appropriate Members of Congress, state and local government officials in Arizona, American Indian tribal governments, and other Federal agencies, groups, and interested parties. Copies of the document may be obtained by contacting DOE as provided in the section of this notice entitled **ADDRESSES.** Copies of the Draft EIS and supporting documents are also available for inspection at the locations identified below:

1. U.S. Department of Energy, Freedom of Information Reading Room, Room 1E–190, Forrestal Building, 1000 Independence Avenue, SW, Washington, DC 20585.
2. Coronado National Forest, Federal Building, 300 West Congress Street, 5th Floor, Room 5H, Tucson, AZ 85701 (phone 520–670–4527).
3. Nogales Ranger District, 303 Old Tucson Road, Nogales, AZ 85621 (phone 520–281–2296).
4. Rio Rico Public Library, 1060 Yavapai Drive, Rio Rico, AZ 85648 (phone 520–281–8067).
5. Tubac Community Library, 50 Bridge Road, Tubac, AZ 85646 (phone 520–398–9814).
6. Conrad Joyner-Green Valley Branch Library, 601 North La Cañada Drive, Green Valley, AZ 85614 (phone 520–625–8660).
7. Nogales-Santa Cruz County Public Library, 518 North Grand Ave., Nogales, AZ 85621 (phone 520–287–3343).

Comments on the Draft EIS may be submitted to Dr. Jerry Pell (*see* **ADDRESSES**, above) or provided at the public hearings (see **DATES**, above). After the public comment period ends on October 14, 2003, DOE will consider all comments received, revise the Draft EIS as appropriate, and issue a Final EIS. DOE will consider the Final EIS, along with other information, such as electric reliability and national policy factors, in deciding whether or not to issue a Presidential permit.

Issued in Washington, DC, this 20th day of August 2003.

Anthony J. Como,

Deputy Director, Electric Power Regulation, Office of Coal and Power Import/Export, Office of Coal and Power Systems, Office of Fossil Energy.

[FR Doc. 03–21885 Filed 8–26–03; 8:45 am]

BILLING CODE 6450–01–P

DEPARTMENT OF ENERGY

Federal Energy Regulatory Commission

[Docket No. RP03–565–000]

ANR Pipeline Company; Notice of Revised Tariff Filing

August 20, 2003.

Take notice that on August 12, 2003, ANR Pipeline Company (ANR), tendered for filing as part of its FERC Gas Tariff, Second Revised Volume No. 1, 2nd Revised Fourth Revised Sheet No. 162, to become effective September 12, 2003.

ANR submits that the listed tariff sheet is being proposed to aid its customers in administration of their storage and associated transportation agreements.

Any person desiring to be heard or to protest said filing should file a motion to intervene or a protest with the Federal Energy Regulatory Commission, 888 First Street, NE., Washington, DC 20426, in accordance with Sections 385.214 or 385.211 of the Commission's Rules and Regulations. All such motions or protests must be filed in accordance with § 154.210 of the Commission's Regulations. Protests will be considered by the Commission in determining the appropriate action to be taken, but will not serve to make protestants parties to the proceedings. Any person wishing to become a party must file a motion to intervene. This filing is available for review at the Commission in the Public Reference Room or may be viewed on the Commission's Web site at *http://www.ferc.gov* using the eLibrary (FERRIS) link. Enter the docket number excluding the last three digits in the docket number field to access the document. For assistance, please contact FERC Online Support at *FERCOnlineSupport@ferc.gov* or toll-free at (866) 208–3676, or TTY, contact (202) 502–8659. The Commission strongly encourages electronic filings. *See* 18 CFR 385.2001(a)(1)(iii) and the instructions on the Commission's Web site under the ''e-Filing'' link.

Comment Date: August 25, 2003.

Magalie R. Salas,

Secretary.

[FR Doc. 03–21896 Filed 8–26–03; 8:45 am]

BILLING CODE 6717–01–P

DEPARTMENT OF ENERGY

Federal Energy Regulatory Commission

[Docket No. RP03–569–000]

CenterPoint Energy—Mississippi River Transmission Corporation; Notice of Tariff Filing

August 20 2003.

Take notice that on August 13, 2003, CenterPoint Energy—Mississippi River Transmission Corporation (MRT) tendered for filing as part of its FERC Gas Tariff, Third Revised Volume No. 1, the following tariff sheets to be effective October 1, 2003:

Forty-Ninth Revised Sheet No. 5.
Forty-Ninth Revised Sheet No. 6.
Forty-Sixth Revised Sheet No. 7.
Nineteenth Revised Sheet No. 8.

MRT states that the purpose of this filing is to comply with the Commission's order issued January 16, 2002 in Docket No. RP01–292. MRT states that it is filing to implement the Period Two Settlement Rates to be effective October 1, 2003 through September 30, 2004.

Any person desiring to be heard or to protest said filing should file a motion to intervene or a protest with the Federal Energy Regulatory Commission, 888 First Street, NE., Washington, DC 20426, in accordance with Sections 385.214 or 385.211 of the Commission's Rules and Regulations. All such motions or protests must be filed in accordance with § 154.210 of the Commission's Regulations. Protests will be considered by the Commission in determining the appropriate action to be taken, but will not serve to make protestants parties to the proceedings. Any person wishing to become a party must file a motion to intervene. This filing is available for review at the Commission in the Public Reference Room or may be viewed on the Commission's Web site at *http://www.ferc.gov* using the eLibrary (FERRIS) link. Enter the docket number excluding the last three digits in the docket number field to access the document. For assistance, please contact FERC Online Support at *FERCOnlineSupport@ferc.gov* or toll-free at (866) 208–3676, or TTY, contact (202) 502–8659. The Commission strongly encourages electronic filings. *See* 18 CFR 385.2001(a)(1)(iii) and the

instructions on the Commission's Web site under the ''e-Filing'' link.

Comment Date: August 25, 2003.

Magalie R. Salas,

Secretary.

[FR Doc. 03–21899 Filed 8–26–03; 8:45 am]

BILLING CODE 6717–01–P

DEPARTMENT OF ENERGY

Federal Energy Regulatory Commission

[Docket No. RP03–570–000]

Colorado Interstate Gas Company; Notice of Proposed Changes in FERC Gas Tariff

August 20, 2003.

Take notice that on August 15, 2003, Colorado Interstate Gas Company (CIG) tendered for filing as part of its FERC Gas Tariff, First Revised Volume No. 1, First Revised Sheet No. 358A, bearing a proposed effective date of October 1, 2002.

CIG states that the tendered tariff sheet adds a recently approved revenue crediting provision to the currently effective Tariff.

Any person desiring to be heard or to protest said filing should file a motion to intervene or a protest with the Federal Energy Regulatory Commission, 888 First Street NE., Washington, DC 20426, in accordance with Sections 385.214 or 385.211 of the Commission's Rules and Regulations. All such motions or protests must be filed in accordance with § 154.210 of the Commission's Regulations. Protests will be considered by the Commission in determining the appropriate action to be taken, but will not serve to make protestants parties to the proceedings. Any person wishing to become a party must file a motion to intervene. This filing is available for review at the Commission in the Public Reference Room or may be viewed on the Commission's Web site at *http://www.ferc.gov* using the eLibrary (FERRIS) link. Enter the docket number excluding the last three digits in the docket number field to access the document. For assistance, please contact FERC Online Support at *FERCOnlineSupport@ferc.gov* or toll-free at (866) 208–3676, or TTY, contact (202) 502–8659. The Commission strongly encourages electronic filings. *See* 18 CFR 385.2001(a)(1)(iii) and the instructions on the Commission's Web site under the ''e-Filing'' link.

Comment Date: August 27, 2003.

Magalie R. Salas,

Secretary.

[FR Doc. 03–21900 Filed 8–26–03; 8:45 am]

BILLING CODE 6717–01–P

DEPARTMENT OF ENERGY

Federal Energy Regulatory Commission

[Docket Nos. RP00–327–005, RP00–604–005]

Columbia Gas Transmission Corporation; Notice of Compliance Filing

August 20, 2003.

Take notice that on August 14, 2003, Columbia Gas Transmission Corporation (Columbia) tendered for filing as FERC Gas Tariff, Second Revised Volume No. 1, the tariff sheets listed on Appendix A to the filing, bearing a proposed effective date of September 1, 2003, and tariff sheets listed on Appendix B to the filing, bearing a proposed effective date of April 1, 2004.

Columbia states it is making this filing in compliance with the Commission's July 30, 2003, Order in the above-referenced dockets. In the July 30 Order, the Commission held that Columbia's August 19, 2002, filing to comply with the Commission's July 19, 2002, order on Columbia's compliance with Order Nos. 637, 587–G, and 587–L generally complied with the requirements of those Orders. Columbia states however, the Commission required that Columbia make certain compliance changes by filing actual tariff sheets within 15 days of the date of issuance of the July 30 Order. The Commission directed Columbia that those tariff sheets should have a September 1, 2003, effective date. Columbia states that in addition, the Commission identified other compliance changes that were to have an effective date of April 1, 2004. Columbia further states that these revised tariff sheets reflect the changes required by the Commission in the July 30 Order.

Columbia states that copies of its filing have been mailed to all firm customers, interruptible customers and affected state commissions.

Any person desiring to protest said filing should file a protest with the Federal Energy Regulatory Commission, 888 First Street, NE., Washington, DC 20426, in accordance with § 385.211 of the Commission's Rules and Regulations. All such protests must be filed in accordance with § 154.210 of the Commission's Regulations. Protests will be considered by the Commission in determining the appropriate action to be taken, but will not serve to make protestants parties to the proceedings. This filing is available for review at the Commission in the Public Reference Room or may be viewed on the Commission's Web site at *http://www.ferc.gov* using the eLibrary (FERRIS) link. Enter the docket number excluding the last three digits in the docket number field to access the document. For assistance, please contact FERC Online Support at *FERCOnlineSupport@ferc.gov* or toll-free at (866) 208–3676, or TTY, contact (202) 502–8659. The Commission strongly encourages electronic filings. *See* 18 CFR 385.2001(a)(1)(iii) and the instructions on the Commission's Web site under the ''e-Filing'' link.

Protest Date: August 26, 2003.

Magalie R. Salas,

Secretary.

[FR Doc. 03–21890 Filed 8–26–03; 8:45 am]

BILLING CODE 6717–01–P

DEPARTMENT OF ENERGY

Federal Energy Regulatory Commission

[Docket Nos. ER03–1088–000]

Direct Energy Marketing Inc.; Notice of Issuance of Order

August 20, 2003.

Direct Energy Marketing Inc. (Direct Energy) filed an application for market-based rate authority, with an accompanying tariff. The proposed tariff provides for wholesale sales of electric energy at market-based rates. Direct Energy also requested waiver of various Commission regulations. In particular, Direct Energy requested that the Commission grant blanket approval under 18 CFR part 34 of all future issuances of securities and assumptions of liability by Direct Energy.

On August 13, 2003, pursuant to delegated authority, the Director, Division of Tariffs and Market Development—South, granted the request for blanket approval under part 34, subject to the following:

Any person desiring to be heard or to protest the blanket approval of issuances of securities or assumptions of liability by Direct Energy should file a motion to intervene or protest with the Federal Energy Regulatory Commission, 888 First Street, NE., Washington, DC 20426, in accordance with Rules 211 and 214 of the Commission's Rules of Practice and Procedure (18 CFR 385.211 and 385.214).

Notice is hereby given that the deadline for filing motions to intervene or protests, as set forth above, is September 12, 2003.

Absent a request to be heard in opposition by the deadline above, Direct Energy is authorized to issue securities and assume obligations or liabilities as a guarantor, indorser, surety, or otherwise in respect of any security of another person; provided that such issuance or assumption is for some lawful object within the corporate purposes of Direct Energy, compatible with the public interest, and is reasonably necessary or appropriate for such purposes.

The Commission reserves the right to require a further showing that neither public nor private interests will be adversely affected by continued approval of Direct Energy's issuances of securities or assumptions of liability.

Copies of the full text of the Order are available from the Commission's Public Reference Branch, 888 First Street, NE., Washington, DC 20426. The Order may also be viewed on the Commission's Web site at *http://www.ferc.gov* , using the e library (FERRIS) link. Enter the docket number excluding the last three digits in the docket number filed to access the document. Comments, protests, and interventions may be filed electronically via the internet in lieu of paper. *See* 18 CFR 385.2001(a)(1)(iii) and the instructions on the Commission's Web site under the ''e-Filing'' link. The Commission strongly encourages electronic filings.

Magalie R. Salas,

Secretary.

[FR Doc. 03–21887 Filed 8–26–03; 8:45 am]

BILLING CODE 6717–01–P

DEPARTMENT OF ENERGY

Federal Energy Regulatory Commission

[Docket Nos. RP00–469–006, RP01–22–008 and RP03–177–003]

East Tennessee Natural Gas Company; Notice of Supplemental Compliance Filing

August 20, 2003.

Take notice that on August 14, 2003, East Tennessee Natural Gas Company (East Tennessee) tendered for filing as part of its FERC Gas Tariff, Second Revised Volume No. 1, Second Sub Original Sheet No. 13, to be effective November 3, 2003.

East Tennessee states that the purpose of this filing is to clarify tariff language contained in its June 23, 2003 compliance filing in the captioned dockets in response to customer comments.

East Tennessee states that copies of its filing have been mailed to all affected customers and interested state commissions, as well as to all parties on the official service lists compiled by the Secretary of the Commission in these proceedings.

Any person desiring to protest said filing should file a protest with the Federal Energy Regulatory Commission, 888 First Street, NE., Washington, DC 20426, in accordance with § 385.211 of the Commission's Rules and Regulations. All such protests must be filed in accordance with § 154.210 of the Commission's Regulations. Protests will be considered by the Commission in determining the appropriate action to be taken, but will not serve to make protestants parties to the proceedings. This filing is available for review at the Commission in the Public Reference Room or may be viewed on the Commission's Web site at *http://www.ferc.gov* using the eLibrary (FERRIS) link. Enter the docket number excluding the last three digits in the docket number field to access the document. For assistance, please contact FERC Online Support at *FERCOnlineSupport@ferc.gov* or toll-free at (866) 208–3676, or TTY, contact (202) 502–8659. The Commission strongly encourages electronic filings. *See* 18 CFR 385.2001(a)(1)(iii) and the instructions on the Commission's Web site under the ''e-Filing'' link.

Protest Date: August 26, 2003.

Magalie R. Salas,

Secretary.

[FR Doc. 03–21893 Filed 8–26–03; 8:45 am]

BILLING CODE 6717–01–P

DEPARTMENT OF ENERGY

Federal Energy Regulatory Commission

[Docket No. RP00–340–008]

Gulf South Pipeline Company, LP; Notice of Compliance Filing

August 20, 2003.

Take notice that on August 13, 2003, Gulf South Pipeline Company, LP (Gulf South) tendered for filing as part of its FERC Gas Tariff, Sixth Revised Volume No. 1, the tariff sheets listed on Attachment A to the filing, to become effective August 1, 2003.

Gulf South files these tariff sheets as directed by the Commission in its July 29, 2003 order regarding Gulf South's filings to comply with Order No. 637.

Any person desiring to protest said filing should file a protest with the Federal Energy Regulatory Commission, 888 First Street, NE., Washington, DC 20426, in accordance with § 385.211 of the Commission's Rules and Regulations. All such protests must be filed in accordance with § 154.210 of the Commission's Regulations. Protests will be considered by the Commission in determining the appropriate action to be taken, but will not serve to make protestants parties to the proceedings. This filing is available for review at the Commission in the Public Reference Room or may be viewed on the Commission's Web site at *http://www.ferc.gov* using the eLibrary (FERRIS) link. Enter the docket number excluding the last three digits in the docket number field to access the document. For assistance, please contact FERC Online Support at *FERCOnlineSupport@ferc.gov* or toll-free at (866) 208–3676, or TTY, contact (202) 502–8659. The Commission strongly encourages electronic filings. *See* 18 CFR 385.2001(a)(1)(iii) and the instructions on the Commission's Web site under the ''e-Filing'' link.

Protest Date: August 25, 2003.

Magalie R. Salas,

Secretary.

[FR Doc. 03–21891 Filed 8–26–03; 8:45 am]

BILLING CODE 6717–01–P

DEPARTMENT OF ENERGY

Federal Energy Regulatory Commission

[Docket No. RP00–340–009]

Gulf South Pipeline Company, LP; Notice of Compliance Filing

August 20, 2003.

Take notice that on August 13, 2003, Gulf South Pipeline Company, LP (Gulf South) tendered for filing as part of its FERC Gas Tariff, Sixth Revised Volume No. 1, the tariff sheets listed on Attachment A to the filing, to become effective August 1, 2003.

Gulf South files these tariff sheets as directed by the Commission in its July 29, 2003 Order regarding Gulf South's filings to comply with Order No. 637.

Any person desiring to protest said filing should file a protest with the Federal Energy Regulatory Commission, 888 First Street, NE., Washington, DC 20426, in accordance with § 385.211 of the Commission's Rules and Regulations. All such protests must be filed in accordance with § 154.210 of the Commission's Regulations. Protests will be considered by the Commission in

determining the appropriate action to be taken, but will not serve to make protestants parties to the proceedings. This filing is available for review at the Commission in the Public Reference Room or may be viewed on the Commission's Web site at *http://www.ferc.gov* using the eLibrary (FERRIS) link. Enter the docket number excluding the last three digits in the docket number field to access the document. For assistance, please contact FERC Online Support at *FERCOnlineSupport@ferc.gov* or toll-free at (866) 208–3676, or TTY, contact (202) 502–8659. The Commission strongly encourages electronic filings. *See* 18 CFR 385.2001(a)(1)(iii) and the instructions on the Commission's Web site under the ''e-Filing'' link.

Protest Date: August 25, 2003.

Magalie R. Salas,

Secretary.

[FR Doc. 03–21892 Filed 8–26–03; 8:45 am]

BILLING CODE 6717–01–P

DEPARTMENT OF ENERGY

Federal Energy Regulatory Commission

[Docket No. RP01–411–001]

Kern River Gas Transmission Company; Notice of Compliance Filing

August 20, 2003.

Take notice that on August 15, 2003, Kern River Gas Transmission Company (Kern River) tendered for filing as part of its FERC Gas Tariff, Second Revised Volume No. 1, the following tariff sheets:

Second Revised Sheet No. 205.
First Revised Sheet No. 206.
First Revised Sheet No. 207.
Original Sheet No. 207–A.

Kern River states that the purpose of this filing is to comply with the order issued on July 29, 2003 in this proceeding by submitting revised tariff sheets that modify the provisions in Kern River's tariff pertaining to the reservation of capacity for use in future expansion projects.

Kern River states that it has served a copy of this filing on all parties designated on the official service list compiled by the Secretary in this proceeding.

Any person desiring to protest said filing should file a protest with the Federal Energy Regulatory Commission, 888 First Street, NE., Washington, DC 20426, in accordance with § 385.211 of the Commission's Rules and Regulations. All such protests must be filed in accordance with § 154.210 of the Commission's Regulations. Protests will be considered by the Commission in determining the appropriate action to be taken, but will not serve to make protestants parties to the proceedings. This filing is available for review at the Commission in the Public Reference Room or may be viewed on the Commission's Web site at *http://www.ferc.gov* using the eLibrary (FERRIS) link. Enter the docket number excluding the last three digits in the docket number field to access the document. For assistance, please contact FERC Online Support at *FERCOnlineSupport@ferc.gov* or toll-free at (866) 208–3676, or TTY, contact (202) 502–8659. The Commission strongly encourages electronic filings. *See* 18 CFR 385.2001(a)(1)(iii) and the instructions on the Commission's Web site under the ''e-Filing'' link.

Protest Date: August 27, 2003.

Magalie R. Salas,

Secretary.

[FR Doc. 03–21895 Filed 8–26–03; 8:45 am]

BILLING CODE 6717–01–P

DEPARTMENT OF ENERGY

Federal Energy Regulatory Commission

[Docket No. RP00–476–005]

Southern Natural Gas Company; Notice of Compliance Filing

August 20, 2003.

Take notice that on August 12, 2003, Southern Natural Gas Company (Southern) tendered for filing as part of its FERC Gas Tariff, Seventh Revised Volume No. 1, the revised tariff sheets shown on Appendix A to the filing, in compliance with the Commission's ''Order on Rehearing and Compliance'' dated July 30, 2003, to become effective September 1, 2003.

Southern submits the tariff sheets to comply with the terms of the Order and Order No. 637 as follows: (1) Elaboration that it will grant intrazone segmentation transactions in reticulated areas if they are operationally feasible; (2) explanation that it will evaluate requests for segmented transactions in the reticulated areas during the standard AESB scheduling cycles; (3) explanation that Southern will not consider backhaul and forwardhaul deliveries to or from the same point to be an overlap for purposes of intrazone segmentation on its system; (4) elimination of references to the short term capacity release price cap waiver which expired in September, 2002; and (5) adjustment of the penalty for the Type 3, Level 3 Emergency OFO to be $15.00.

Any person desiring to protest said filing should file a protest with the Federal Energy Regulatory Commission, 888 First Street, NE., Washington, DC 20426, in accordance with § 385.211 of the Commission's Rules and Regulations. All such protests must be filed in accordance with § 154.210 of the Commission's Regulations. Protests will be considered by the Commission in determining the appropriate action to be taken, but will not serve to make protestants parties to the proceedings. This filing is available for review at the Commission in the Public Reference Room or may be viewed on the Commission's Web site at *http://www.ferc.gov* using the eLibrary''(FERRIS) link. Enter the docket number excluding the last three digits in the docket number field to access the document. For assistance, please contact FERC Online Support at *FERCOnlineSupport@ferc.gov* or toll-free at (866) 208–3676, or TTY, contact (202) 502–8659. The Commission strongly encourages electronic filings. *See* 18 CFR 385.2001(a)(1)(iii) and the instructions on the Commission's Web site under the ''e-Filing'' link.

Protest Date: August 25, 2003.

Magalie R. Salas,

Secretary.

[FR Doc. 03–21894 Filed 8–26–03; 8:45 am]

BILLING CODE 6717–01–P

DEPARTMENT OF ENERGY

Federal Energy Regulatory Commission

[Docket No. RP03–566–000]

Transcontinental Gas Pipe Line Corporation; Notice of Refund Report

August 20, 2003.

Take notice that on August 12, 2003, Transcontinental Gas Pipe Line Corporation (Transco) tendered for filing a report reflecting the flow through of refunds received from Dominion Transmission, Inc.

Transco states that on July 15, 2003 in accordance with Section 4 of its Rate Schedule LSS and Section 3 of its Rate Schedule GSS, it refunded $177,572.18 to its LSS and GSS customers, as a result of the refund of Dominion Transmission, Inc. in Docket No. RP03–515. Transco states that the refund covers the period from April 1, 2002 to March 31, 2003.

Any person desiring to be heard or to protest said filing should file a motion to intervene or a protest with the

Federal Energy Regulatory Commission, 888 First Street, NE., Washington, DC 20426, in accordance with Sections 385.214 or 385.211 of the Commission's Rules and Regulations. All such motions or protests must be filed or before the intervention and protest date as indicated below. Protests will be considered by the Commission in determining the appropriate action to be taken, but will not serve to make protestants parties to the proceedings. Any person wishing to become a party must file a motion to intervene. This filing is available for review at the Commission in the Public Reference Room or may be viewed on the Commission's Web site at *http://www.ferc.gov* using the eLibrary (FERRIS) link. Enter the docket number excluding the last three digits in the docket number field to access the document. For assistance, please contact FERC Online Support at *FERCOnlineSupport@ferc.gov* or toll-free at (866) 208–3676, or TTY, contact (202) 502–8659. The Commission strongly encourages electronic filings. *See* 18 CFR 385.2001(a)(1)(iii) and the instructions on the Commission's Web site under the ''e-Filing'' link.

Comment Date: August 26, 2003.

Magalie R. Salas,

Secretary.

[FR Doc. 03–21897 Filed 8–26–03; 8:45 am]

BILLING CODE 6717–01–P

DEPARTMENT OF ENERGY

Federal Energy Regulatory Commission

[Docket No. RP03–567–000]

Transcontinental Gas Pipe Line Corporation; Notice of Tariff Filing

August 20, 2003.

Take notice that on August 14, 2003, Transcontinental Gas Pipe Line Corporation (Transco) tendered for filing to become part of its FERC Gas Tariff, Third Revised Volume No. 1, Twenty Third Revised Sheet No. 28, proposed to be effective August 1, 2003.

Transco states that the purpose of the instant filing is to track rate changes attributable to storage service purchased from Texas Eastern Transmission Corporation (TETCO) under its Rate Schedule X–28, the costs of which are included in the rates and charges payable under Transco's Rate Schedule S–2. Transco states that this filing is being made pursuant to tracking provisions under Section 26 of the General Terms and Conditions of Transco's Third revised Volume No. 1 Tariff. Transco also states that included in Appendix A attached to the filing is the explanation of the rate changes and details regarding the computation of the revised S–2 rates.

Transco states that copies of the filing are being mailed to affected customers and interested State Commissions.

Any person desiring to be heard or to protest said filing should file a motion to intervene or a protest with the Federal Energy Regulatory Commission, 888 First Street NE., Washington, DC 20426, in accordance with Sections 385.214 or 385.211 of the Commission's Rules and Regulations. All such motions or protests must be filed in accordance with § 154.210 of the Commission's Regulations. Protests will be considered by the Commission in determining the appropriate action to be taken, but will not serve to make protestants parties to the proceedings. Any person wishing to become a party must file a motion to intervene. This filing is available for review at the Commission in the Public Reference Room or may be viewed on the Commission's Web site at *http://www.ferc.gov* using the eLibrary (FERRIS) link. Enter the docket number excluding the last three digits in the docket number field to access the document. For assistance, please contact FERC Online Support at *FERCOnlineSupport@ferc.gov* or toll-free at (866) 208–3676, or TTY, contact (202) 502–8659. The Commission strongly encourages electronic filings. *See* 18 CFR 385.2001(a)(1)(iii) and the instructions on the Commission's Web site under the ''e-Filing'' link.

Comment Date: August 26, 2003.

Magalie R. Salas,

Secretary.

[FR Doc. 03–21898 Filed 8–26–03; 8:45 am]

BILLING CODE 6717–01–P

DEPARTMENT OF ENERGY

Federal Energy Regulatory Commission

[P–620–000]

Notice of Draft License Application and Preliminary Draft Environmental Assessment (PDEA) and Request for Preliminary Terms and Conditions

August 20, 2003.

Take notice that the following hydroelectric application has been filed with the Commission and is available for public inspection.

a. *Type of Application:* Subsequent License.

b. *Project No.:* 620–000.

c. *Date Filed:* August 4, 2003.

d. *Applicant:* Norquest Seafoods.

e. *Name of Project:* Chignik Hydroelectric Project.

f. *Location:* On Indian Creek, a tributary of Chignik Bay, in the Town of Chignik, Aleutian Islands, Alaska. The project occupies 38.89 acres of United States lands under the jurisdiction of the Bureau of Land Management.

g. *Filed Pursuant to*: Federal Power Act 16 U.S.C. 791(a)–825(r).

h. *Applicant Contact*: Mr. Ron Soule, Norquest Seafoods, Inc., 5245 Shilshole Avenue, NW., Seattle, WA 98107–4833, Phone: (206) 281–7022. Mr. Daniel Hertrich, Polarconsult Alaska, Inc., 1503 W 33rd Avenue, #310, Anchorage, AK 99503, Phone: (907) 258–2420.

i. *FERC Contact:* John M. Mudre, (202) 502–8902, *john.mudre@ferc.gov*.

j. *Status of Project:* With this notice the Commission is soliciting: (1) preliminary terms, conditions, and recommendations on the Preliminary Draft Environmental Assessment (DEA); and (2) comments on the Draft License Application.

k. *Deadline for filing:* September 30, 2003.

All comments on the Preliminary DEA and Draft License Application should be sent to the addresses noted above in Item (h), with one copy filed with FERC at the following address: Magalie R. Salas, Secretary, Federal Energy Regulatory Commission, 888 First Street, NE., Washington, DC 20426. All comments must include the project name and number and bear the heading Preliminary Comments, Preliminary Recommendations, Preliminary Terms and Conditions, or Preliminary Prescriptions.

Comments, preliminary recommendations, terms and conditions, and prescriptions may be filed electronically via the Internet in lieu of paper. The Commission strongly encourages electronic filings. *See* 18 CFR 385.2001(a)(1)(iii) and the instructions on the Commission's Web site (*http://www.ferc.gov*) under the ''e-Filing'' link.

l. A copy of the application is available for review at the Commission in the Public Reference Room or may be viewed on the Commission's Web site at *http://www.ferc.gov* using the eLibrary (FERRIS) link. Enter the docket number excluding the last three digits in the docket number field to access the document. For assistance, contact FERC Online Support at *FERCOnlineSupport@ferc.gov* or toll-free at 1–866–208–3676, or for TTY, (202) 502–8659.

You may also register online at *http://www.ferc.gov/esubscribenow.htm* to be notified via email of new filings

and issuances related to this or other pending projects. For assistance, contact FERC Online Support.

Polarconsult Alaska, Inc. has mailed a copy of the Preliminary DEA and Draft License Application to interested entities and parties. Copies of these documents are available for review at Polarconsult Alaska, Inc.'s address in h., above.

m. With this notice, we are initiating consultation with the *Alaska State Historic Preservation Officer* (SHPO), as required by section 106, National Historic Preservation Act, and the regulations of the Advisory Council on Historic Preservation, 36 CFR 800.4.

Magalie R. Salas,

Secretary.

[FR Doc. 03–21888 Filed 8–26–03; 8:45 am]

BILLING CODE 6717–01–P

DEPARTMENT OF ENERGY

Federal Energy Regulatory Commission

[Project No. 7264–010]

Notice of Application Accepted for Filing and Soliciting Motions To Intervene and Protest

August 20, 2003.

Take notice that the following hydroelectric application has been filed with the Commission and is available for public inspection.

a. *Type of Application:* Subsequent License for a Minor Water Power Project.

b. *Project No.:* P–7264–010.

c. *Date Filed:* January 22, 2003.

d. *Applicant:* Fox River Paper Company and N.E.W. Hydro, Inc.

e. *Name of Project:* Middle Appleton Dam Hydroelectric Project.

f. *Location:* Located on the Lower Fox River, Outagamie County, Wisconsin. This project would not use federal lands.

g. *Filed Pursuant to:* Federal Power Act 16 U.S.C. 791(a)–825(r).

h. *Applicant Contact:* Mr. John Rom, Manager, Fox River Paper Company, P.O. Box 2215, Appleton, Wisconsin 54913, 920–733–7341 or Mr. Arie DeWaal, Mead and Hunt, Inc., 6501 Watts Road, Madison Wisconsin 53719, 608–273–6380.

i. *FERC Contact:* John Ramer, (202) 502–8969 or e-mail *John.Ramer@ferc.gov*.

j. *Deadline for filing motions to intervene and protest*: 60 days from the issuance date of this notice.

All documents (original and eight copies) should be filed with: Magalie R. Salas, Secretary, Federal Energy Regulatory Commission, 888 First Street NE., Washington, DC 20426.

The Commission's Rules of Practice and Procedure require all intervenors filing documents with the Commission to serve a copy of that document on each person whose name appears on the official service list for the project. Further, if an intervenor files comments or documents with the Commission relating to the merits of an issue that may affect the responsibilities of a particular resource agency, they must also serve a copy of the document on that resource agency.

Motions to intervene and protests may be filed electronically via the Internet in lieu of paper. The Commission strongly encourages electronic filings. *See* CFR 385.200(a)(1)(iii) and the instructions on the Commission's Web site (*http://www.ferc.gov*) under the ''e-Filing'' link.

k. This application has been accepted, but is not ready for environmental analysis at this time.

l. *The Middle Appleton Hydroelectric Project would consist of the following existing facilities:* (1) A 372-foot-long by about 20-foot-high dam, topped with 15 functional and one non-functional, 20-foot-wide by 10-foot-high, steel Taintor gates; (2) a 35.5-acre reservoir with a gross storage capacity of about 195-acre feet; (3) two power channels , one about 500-foot-long by 40-foot-wide, and another 1,700-foot-long and from 120 foot-to 200-foot-wide; (4) three powerhouses containing seven open-flume Francis turbines with a total maximum hydraulic capacity of 1,650 cubic feet per second (cfs) and seven generating units with a total installed generating capacity of 1,190 kilowatts (kW) and producing a total of 8,635,000 kilowatt hours (kWh) annually; (5) two transformer banks and one 4.16-kilovolt (kV) transmission line; along with (6) appurtenant facilities. The dam and existing project facilities are owned by Fox River Paper Company and N.E.W. Hydro, Inc.

m. A copy of the application is available for review at the Commission in the Public Reference Room or may be viewed on the Commission's Web site at *http://www.ferc.gov* using the eLibrary (FERRIS) link. Enter the docket number excluding the last three digits in the docket number field to access the document. For assistance, contact FERC Online Support at *FERCOnlineSupport@ferc.gov* or toll-free at 1–866–208–3676, or for TTY, (202) 502–8659. A copy is also available for inspection and reproduction at the address in item h. above.

You may also register online at *http://www.ferc.gov/esubscribenow.htm* to be notified via email of new filings and issuances related to this or other pending projects. For assistance, contact FERC Online Support.

n. Anyone may submit a protest or a motion to intervene in accordance with the requirements of Rules of Practice and Procedure, 18 CFR 385.210, 385.211, and 385.214. In determining the appropriate action to take, the Commission will consider all protests filed, but only those who file a motion to intervene in accordance with the Commission's Rules may become a party to the proceeding. Any protests or motions to intervene must be received on or before the specified deadline date for the particular application.

All filings must (1) bear in all capital letters the title ''PROTEST'' or ''MOTION TO INTERVENE''; (2) set forth in the heading the name of the applicant and the project number of the application to which the filing responds; (3) furnish the name, address, and telephone number of the person protesting or intervening; and (4) otherwise comply with the requirements of 18 CFR 385.2001 through 385.2005. Agencies may obtain copies of the application directly from the applicant. A copy of any protest or motion to intervene must be served upon each representative of the applicant specified in the particular application.

Magalie R. Salas,

Secretary.

[FR Doc. 03–21889 Filed 8–26–03; 8:45 am]

BILLING CODE 6717–01–P

ENVIRONMENTAL PROTECTION AGENCY

[FRL–7549–8]

Tracer-Test Planning Using the Efficient Hydrologic Tracer-Test Design (EHTD) Program

AGENCY: Environmental Protection Agency.

ACTION: Notice of availability of final document.

SUMMARY: The U. S. Environmental Protection Agency (EPA) announces the availability of a final document and associated computer program, *Tracer-Test Planning Using the Efficient Hydrologic Tracer-Test Design (EHTD) Program* (EPA/600/R–03/034, April 2003). This document was prepared by the U.S. Environmental Protection Agency's (EPA) National Center for Environmental Assessment (NCEA) of the Office of Research and Development (ORD).

The purpose of this document is to serve as a technical guide to various groups who must address potential or existing contamination problems in hydrologic systems using trace tests. Hydrologic complexities and inadequate data tends to relegate initial tracer-test designs regarding appropriate tracer masses and sample collection times to simple conjecture. This document and associated computer program alleviate some of these problems.

EHTD produces a detailed assessment of expected tracer-test results before a tracer test is ever initiated. It also produces a probable tracer-breakthrough curve for each sampling station. Preliminary testing of EHTD has shown it to be reliable in most instances.

DATES: This document will be available soon.

ADDRESSES: This document is available electronically through the NCEA Web site at (*www.epa.gov/ncea*). A limited number of paper copies will be available from the EPA's National Service Center for Environmental Publications (NSCEP) in Cincinnati, OH (telephone: 1–800–490–9198 or 513–489–8190; facsimile: 513–489–8695; or via the Internet at *http://www.epa.gov/NCEPIhome/orderpub.html*). Please provide your name, mailing address, the title, and EPA number of the requested publication when ordering from NSCEP. Copies may also be purchased from the National Technical Information Service (NTIS) in Springfield, Virginia; telephone: 1–800–553–NTIS[6847] or 703–605–6000; facsimile: 703–321–8547. Please provide the number PB2003–103271 when ordering from NTIS.

FOR FURTHER INFORMATION CONTACT: For further information, please contact Malcolm Field (202–564–3279) mailing address: National Center for Environmental Assessment (8623D), U.S. Environmental Protection Agency, 1200 Pennsylvania Avenue, NW., Washington, DC 20460; facsimile: 202–565–0079; e-mail: *field.malcolm@epa.gov.*

Dated: August 18, 2003.

Peter W. Preuss,

Director, National Center for Environmental Assessment.

[FR Doc. 03–21934 Filed 8–26–03; 8:45 am]

BILLING CODE 6560–50–P

EQUAL EMPLOYMENT OPPORTUNITY COMMISSION

Meetings; Sunshine Act

AGENCY HOLDING THE MEETING: Equal Employment Opportunity Commission.

DATE AND TIME: Monday, September 8, 2003 (Two (2) Sessions—Morning Session: 9:30 a.m.–12:50 p.m., and Afternoon Session 2:10 p.m.–4:55 p.m. eastern time).

PLACE: Clarence M. Mitchell Conference Room on the Ninth Floor of the EEOC Office Building, 1801 ''L'' Street, NW., Washington, DC 20507.

STATUS: The meeting will be open to the public.

MATTERS TO BE CONSIDERED:

Open Session

1. Announcement of Notation Votes, and

2. Panel Discussions on Repositioning for New Realities: Securing EEOC's Continued Effectiveness—Trends and Issues Driving the Need for Change

Note: Any matter not discussed or concluded may be carried over to a later meeting. (In addition to publishing notices on EEOC Commission meetings in the **Federal Register**, the Commission also provides a recorded announcement a full week in advance on future Commission sessions.

Please telephone (202) 663–7100 (voice) and (202) 663–4074 (TTD) at any time for information on these meetings. *Contact person for more information:* Frances M. Hart, Executive Officer on (202) 663–4070.

Dated: August 25, 2003.

Frances M. Hart,

Executive Officer, Executive Secretariat.

[FR Doc. 03–22024 Filed 8–25–03; 11:40 am]

BILLING CODE 6750–06–M

OFFICE OF SCIENCE AND TECHNOLOGY POLICY

Meeting of the President's Council of Advisors on Science and Technology

ACTION: Notice of meeting.

SUMMARY: This notice sets forth the schedule and summary agenda for a meeting of the President's Council of Advisors on Science and Technology (PCAST), and describes the functions of the Council. Notice of this meeting is required under the Federal Advisory Committee Act (FACA).

Dates and Place: September 9, 2003, Washington, DC. The meeting will be held in Room 100 (lobby level) of the National Academy of Sciences Building, 500 Fifth Street NW., Washington, DC 20001.

Type of meeting: Open. For details on the agenda please see the PCAST Web site at: *http://www.ostp.gov/PCAST/pcast.html.*

Proposed schedule and agenda: The President's Council of Advisors on Science and Technology is scheduled to meet in open session on Tuesday September 9, 2003, at approximately 9 a.m. The PCAST is tentatively scheduled to: (1) Discuss the status of the work of its workforce-education subcommittee; (2) discuss preliminary draft findings of its information technology manufacturing-competitiveness subcommittee; and (3) continue its discussion of nanotechnology and its review of the federal National Nanotechnology Initiative. This session will end at approximately 3 p.m. Additional information on the agenda can be found at the PCAST Web site at: *http://www.ostp.gov/PCAST/pcast.html.*

Public Comments: There will be time allocated for the public to speak on the above agenda items. This public comment time is designed for substantive commentary on PCAST's work topics, not for business marketing purposes. Please submit a request for the opportunity to make a public comment five (5) days in advance of the meeting. Presentations will be reviewed for appropriate content and marketing opportunities will not be provided. The time for public comments will be limited to no more than 5 minutes per person. Written comments are also welcome at any time following the meeting. Please notify Stan Sokul, PCAST Executive Director, at (202) 456–6070, or fax your request/comments to (202) 456–6021.

FOR FURTHER INFORMATION CONTACT: For information regarding time, place and agenda, please call Cynthia Chase at (202) 456–6010, prior to 3 p.m. on Friday, September 5, 2003. Information will also be available at the PCAST Web site at: *http://www.ostp.gov/PCAST/pcast.html.* Please note that public seating for this meeting is limited and is available on a first-come, first-served basis.

SUPPLEMENTARY INFORMATION: The President's Council of Advisors on Science and Technology was established by Executive Order 13226, on September 30, 2001. The purpose of PCAST is to advise the President on matters of science and technology policy, and to assist the President's National Science and Technology Council in securing private sector participation in its activities. The Council members are distinguished individuals appointed by the President from non-Federal sectors. The PCAST is co-chaired by Dr. John H. Marburger, III, the Director of the Office of Science and Technology Policy, and by E. Floyd

Kvamme, a Partner at Kleiner Perkins Caufield & Byers.

Stanley S. Sokul,

Executive Director, PCAST, and Counsel, Office of Science and Technology Policy.

[FR Doc. 03–22025 Filed 8–26–03; 8:45 am]

BILLING CODE 3170–01–M

FEDERAL ACCOUNTING STANDARDS ADVISORY BOARD

Notice of Meeting

AGENCY: Federal Accounting Standards Advisory Board.

ACTION: Notice of New Exposure Draft *Heritage Assets and Stewardship Land: Reclassification From Required Supplementary Stewardship Information,* and a Scheduled Public Hearing on Accounting and Fiduciary Activities.

Board Action: Pursuant to the Federal Advisory Committee Act (Pub. L. No. 92–463), as amended, section 10(a)(2), and the FASAB Rules of Procedure, as amended in October, 1999, notice is hereby given that the Federal Accounting Standards Advisory Board has published a new exposure draft, Heritage Assets and Stewardship Land: Reclassification from Required Supplementary Stewardship Information.

A summary of the proposed Statement follows: The proposed standard classifies heritage assets and stewardship land information as basic information, except for condition information, which would be classified as required supplementary information. The proposed standard also introduces minor changes to the current disclosure requirements for heritage assets and stewardship land by requiring policies and an explanation of how heritage assets and stewardship land are pertinent to the entity's mission. Additionally, it will be available on FASAB's home page *http://www.fasab.gov/.* Copies can be obtained by contacting FASAB at 202–512–7350, or *loughanm@fasab.gov.* Respondents are encouraged to comment on any part of the exposure draft. Written comments are requested by November 10, 2003, and should be sent to: Wendy M. Comes, Executive Director, Federal Accounting Standards Advisory Board, 441 G Street, NW., Suite 6814, Washington, DC 20548.

Notice is also given that a public hearing of the Federal Accounting Standards Advisory Board will be held on Wednesday, October 8, 2003 from 9:15 a.m. to 12 p.m. in room 7C13 of the General Accounting Office, 441 G Street, NW., Washington, DC.

The purpose of the hearing is to hear testimony from interested parties on *Accounting for Fiduciary Activities.* Those interested in testifying should contact Richard Fontenrose, Assistant Director, no later than one week prior to the hearing. Mr. Fontenrose can be reached at 202–512–7358 or via e-mail at *fontenroser@fasab.gov.*

Also, they should at the same time provide a short biography and written copies of their testimony. Any interested person may attend the public hearing as an observer. Board discussions and reviews are open to the public.

FOR FURTHER INFORMATION CONTACT: Wendy Comes, Executive Director, 441 G St., NW., Mail Stop 6K17V, Washington, DC 20548, or call (202) 512–7350.

Authority: Federal Advisory Committee Act. Pub. L. No. 92–463.

Dated: August 21, 2003.

Robert Bramlett,

Assistant Director.

[FR Doc. 03–21850 Filed 8–26–03; 8:45 am]

BILLING CODE 1610–01–M

FEDERAL COMMUNICATIONS COMMISSION

[WC Docket No. 02–60; DA 03–2633]

New Universal Service Deadline for Completing Funding Year 2002 Rural Healthcare Application Process

AGENCY: Federal Communications Commission.

ACTION: Notice.

SUMMARY: This document announces the new deadline for completing Rural Healthcare Applications for filing the FCC Form 466/468 packet, for those rural healthcare providers seeking discounts for Funding Year 2002 under the rural healthcare universal service support mechanism.

DATES: Filing deadline is October 8, 2003.

FOR FURTHER INFORMATION CONTACT: Diane Law-Hsu, Deputy Chief, Wireline Competition Bureau, Telecommunications Access Policy Division (202) 418–7400, TTY: (202) 418–0484.

SUPPLEMENTARY INFORMATION: October 8, 2003, is the final deadline for filing the FCC Form 466/468 packet, for those rural healthcare providers seeking discounts for Funding Year 2002 under the rural healthcare universal service support mechanism. The Form 466/468 packet informs the Rural Healthcare Division (RHCD) of the Universal Service Administrative Company that the health care provider has entered into an agreement with a telecommunications carrier for a service eligible for universal service support. Those entities that have applied for support for Funding Year 2002 (July 1, 2002–June 30, 2003) must have their completed packet postmarked by October 8, 2003. The completed FCC Form 466/468 packet must include the following: FCC Form 466 (Services Ordered and Certification Form), completed by the health care provider; FCC Form 468 (Telecommunications Service Providers Support Form), completed by the telecommunications carrier; contract document or tariff designation, provided by either the health care provider or telecommunications carrier; and if the health care provider is seeking support based on an urban/rural rate comparison, documentation must be included to show the rate for the selected service(s) in the nearest city of 50,000 or more within the State.

The forms and accompanying instructions may be obtained at the RHCD Web site *http://www.rhc.universalservice.org/forms/default.asp#2003.* Parties with questions or in need of assistance with the filing of their applications should contact RHCD's Customer Service Support Center at 1–800–229–5476.

Federal Communications Commission.

Eric N. Einhorn,

Chief, Wireline Competition Bureau, Telecommunications Access Policy Division.

[FR Doc. 03–21837 Filed 8–26–03; 8:45 am]

BILLING CODE 6712–01–P

FEDERAL COMMUNICATIONS COMMISSION

Network Reliability and Interoperability Council

AGENCY: Federal Communications Commission.

ACTION: Notice of public meeting.

SUMMARY: In accordance with the Federal Advisory Committee Act, this notice advises interested persons of the fifth meeting of the Network Reliability and Interoperability Council (Council) under its charter renewed as of December 26, 2001. The meetings will be held at the Federal Communications Commission in Washington, DC.

DATES: Monday, September 15, 2003, from 1 p.m. to 4 p.m.

ADDRESSES: Federal Communications Commission, 445 12th Street SW., Room TW–C305, Washington, DC.

FOR FURTHER INFORMATION CONTACT: Jeffery Goldthorp at 202–418–1096 or TTY 202–418–2989.

SUPPLEMENTARY INFORMATION: The Council was established by the Federal Communications Commission to bring together leaders of the telecommunications industry and telecommunications experts from academic, consumer and other organizations to explore and recommend measures that will enhance network security, reliability and interoperability. At the September meeting the Council will discuss the progress of working groups that are addressing the topics that are contained in the Council's charter and any additional issues that may come before it.

Members of the general public may attend the meeting. The Federal Communications Commission will attempt to accommodate as many people as possible. Admittance, however, will be limited to the seating available. The public may submit written comments before the meeting to Jeffery Goldthorp, the Commission's Designated Federal Officer for the Network Reliability and Interoperability Council, by e-mail *Jeffery.Goldthorp@fcc.gov* or U.S. mail (7–A325, 445 12th Street SW., Washington, DC 20554). Real Audio and streaming video Access to the meeting will be available at *http://www.fcc.gov.*

Federal Communications Commission.

Marlene Dortch,

Secretary.

[FR Doc. 03–21863 Filed 8–26–03; 8:45 am]

BILLING CODE 6712–01–P

FEDERAL MARITIME COMMISSION

Notice of Agreement(s) Filed

The Commission hereby gives notice of the filing of the following agreement(s) under the Shipping Act of 1984. Interested parties can review or obtain copies of agreements at the Washington, DC, offices of the Commission, 800 North Capitol Street, NW., Room 940. Interested parties may submit comments on an agreement to the Secretary, Federal Maritime Commission, Washington, DC 20573, within 10 days of the date this notice appears in the **Federal Register**.

Agreement No.: 011284–053.

Title: Ocean Carrier Equipment Management Association Agreement (''OCEMA'').

Parties: APL Co. Pte. Ltd.; American President Lines, Ltd.; A.P.Moller-Maersk Sealand; CMA CGM, S.A.; Compania Sud Americana de Vapores, S.A.; Evergreen Marine Corp. (Taiwan) Ltd.; Hanjin Shipping Co., Ltd.; Hamburg-Süd-amerikanische Dampfschifffahrtsgesellschaft KG; Hapag-Lloyd Container Linie GmbH; Hyundai Merchant Marine Co., Ltd.; Mitsui O.S.K. Lines Ltd.; Lykes Lines Limited, LLC; TMM Lines Limited, LLC; Contship Containerlines, a division of CP Ships (UK) Limited; Australia-New Zealand Direct Line, a division of CP Ships (UK) Limited; Orient Overseas Container Line Limited; P&O Nedlloyd B.V.; P&O Nedlloyd Limited; Nippon Yusen Kaisha Line; Yang Ming Marine Transport Corp.; COSCO Container Lines Company Limited; Kawasaki Kisen Kaisha, Ltd.; and Crowley Maritime Corporation.

Synopsis: The subject amendment reflects that the administration and management of OCEMA will be through a non-profit corporation, revises committee membership and functions, and makes conforming modifications with the foregoing.

Agreement No.: 011860.

Title: CLS/Lykes Space Charter Agreement.

Parties: Crowley Liner Services, Inc.; Lykes Lines Limited, LLC.

Synopsis: The proposed agreement would authorize Crowley to charter space to Lykes in the trade from Gulfport, MS, to Puerto Cortes, Honduras.

By Order of the Federal Maritime Commission.

Dated: August 22, 2003.

Bryant L. VanBrakle,

Secretary.

[FR Doc. 03–21947 Filed 8–26–03; 8:45 am]

BILLING CODE 6730–01–P

FEDERAL RESERVE SYSTEM

Change in Bank Control Notices; Acquisition of Shares of Bank or Bank Holding Companies

The notificants listed below have applied under the Change in Bank Control Act (12 U.S.C. 1817(j)) and § 225.41 of the Board's Regulation Y (12 CFR 225.41) to acquire a bank or bank holding company. The factors that are considered in acting on the notices are set forth in paragraph 7 of the Act (12 U.S.C. 1817(j)(7)).

The notices are available for immediate inspection at the Federal Reserve Bank indicated. The notices also will be available for inspection at the office of the Board of Governors. Interested persons may express their views in writing to the Reserve Bank indicated for that notice or to the offices of the Board of Governors. Comments must be received not later than September 10, 2003.

A. Federal Reserve Bank of Atlanta (Sue Costello, Vice President) 1000 Peachtree Street, N.E., Atlanta, Georgia 30303:

1. Guy F. Medley, Michael P. McCann, both of Dothan, Alabama, and Michael A. Medley, Bonifay, Florida; to retain voting shares of Bonifay Holding Company, Inc., Bonifay, Florida, and thereby indirectly retain voting shares of The Bank of Bonifay, Bonifay, Florida.

2. Anita Marie Fontenot Melancon, Carla LaHaye Duhon and Darwin James Fontenot, all of Lafayette, Louisiana; Rachel Fontenot Wyble, Carencro, Louisiana; Carl Winn Fontenot, Verona Gayla Fontenot, Chad David Fontenot, Craig Dwaine Fontenot, David Joseph Fontenot, and Vickie Lynn Fontenot Bergeron, and Percy Fontenot, all of Ville Platte, Louisiana; Thelma Guillory LaHaye, Brenda LaHaye Vidrine, Earline Faye LaHaye Parrott, Richard Stagg Parrott III, and Karen Kathy LaHaye Marcantel, all of Mamou, Louisiana, to acquire voting shares of Citizens Bancshares, Inc., and thereby indirectly acquire voting shares of Citizens Bank, both of Ville Platte, Louisiana.

Board of Governors of the Federal Reserve System, August 21, 2003.

Jennifer J. Johnson,

Secretary of the Board.

[FR Doc. 03–21878 Filed 8–26–03; 8:45 am]

BILLING CODE 6210–01–S

FEDERAL RESERVE SYSTEM

Formations of, Acquisitions by, and Mergers of Bank Holding Companies

The companies listed in this notice have applied to the Board for approval, pursuant to the Bank Holding Company Act of 1956 (12 U.S.C. 1841 *et seq.*) (BHC Act), Regulation Y (12 CFR Part 225), and all other applicable statutes and regulations to become a bank holding company and/or to acquire the assets or the ownership of, control of, or the power to vote shares of a bank or bank holding company and all of the banks and nonbanking companies owned by the bank holding company, including the companies listed below.

The applications listed below, as well as other related filings required by the Board, are available for immediate inspection at the Federal Reserve Bank indicated. The application also will be available for inspection at the offices of

the Board of Governors. Interested persons may express their views in writing on the standards enumerated in the BHC Act (12 U.S.C. 1842(c)). If the proposal also involves the acquisition of a nonbanking company, the review also includes whether the acquisition of the nonbanking company complies with the standards in section 4 of the BHC Act (12 U.S.C. 1843). Unless otherwise noted, nonbanking activities will be conducted throughout the United States. Additional information on all bank holding companies may be obtained from the National Information Center website at *www.ffiec.gov/nic/*.

Unless otherwise noted, comments regarding each of these applications must be received at the Reserve Bank indicated or the offices of the Board of Governors not later than September 22, 2003.

A. Federal Reserve Bank of Minneapolis (Richard M. Todd, Vice President and Community Affairs Officer) 90 Hennepin Avenue, Minneapolis, Minnesota 55480-0291:

1. Signature Bancshares, Inc., Minnetonka, Minnesota; to become a bank holding company by acquiring 100 percent of the voting shares of Signature Bank, Minnetonka, Minnesota.

Board of Governors of the Federal Reserve System, August 21, 2003.

Jennifer J. Johnson,

Secretary of the Board.

[FR Doc. 03–21879 Filed 8–26–03; 8:45 am]

BILLING CODE 6210–01–S

DEPARTMENT OF HEALTH AND HUMAN SERVICES

Centers for Disease Control and Prevention

[Program Announcement 04018]

Cooperative Agreement With the University of Malawi College of Medicine; Notice of Intent To Fund Single Eligibility Award

A. Purpose

A Notice of Intent to Fund a Single Eligibility Award, Program Announcement 03127 was published in the **Federal Register**, May 13, 2003, Vol 68, Number 92, pages 25612–25613. That notice is rescinded, and replaced as follows:

The Centers for Disease Control and Prevention (CDC) announces the intent to fund fiscal year (FY) 2004 funds for a cooperative agreement program with the University of Malawi, College of Medicine, located in Blantyre, Malawi. The Catalog of Federal Domestic Assistance number for this program is 93.283.

B. Eligible Applicant

Assistance will be provided only to the University of Malawi, College of Medicine. The University of Malawi, College of Medicine is the only institution that possesses the requisite scientific and technical expertise, the infrastructure capacity and experience in conducting the described operations research topics, and which has collaborative relationships within Malawi and internationally to ensure that all aspects of this agreement can be fulfilled.

C. Funding

Approximately $125,000 is available in FY 2004 to fund this award. It is expected that the award will begin on or before December 1, 2003, and will be made for a 12-month budget period within a project period of up to five years. Funding estimates may change.

D. Where to Obtain Additional Information

For general comments or questions about this announcement, contact:

Technical Information Management, CDC Procurement and Grants Office, 2920 Brandywine Road, Atlanta, GA 30341–4146, Telephone: 770–488–2700.

For technical questions about this program, contact: Carl Campbell, Program Manager, Blantyre Integrated Malaria Initiative, Blantyre District Health Office, Blantyre, Malawi, Telephone: 265–167–6071 or 265–883–2614, E-mail address: *cdc@malawi.net.*

Dated: August 18, 2003.

Sandra R. Manning,

Director, Procurement and Grants Office, Centers for Disease Control and Prevention.

[FR Doc. 03–21864 Filed 8–26–03; 8:45 am]

BILLING CODE 4163–18–P

DEPARTMENT OF HEALTH AND HUMAN SERVICES

National Institutes of Health

National Cancer Institute; Notice of Closed Meeting

Pursuant to section 10(d) of the Federal Advisory Committee Act, as amended (5 U.S.C. Appendix 2), notice is hereby given of the meeting of the President's Cancer Panel.

The meeting will be open to the public as indicated below, with attendance limited to space available. Individuals who plan to attend and need special assistance, such as sign language interpretation or other reasonable accommodations, should notify the Contact Person listed below in advance of the meeting.

The meeting will be closed to the public in accordance with the provisions set forth in section 552b(c)(9)(B), Title 5 U.S.C., as amended because the premature disclosure of information and the discussions would likely to significantly frustrate implementation of recommendations.

Name of Committee: President's Cancer Panel.

Date: September 5–6, 2003.

Open: September 5, 2003, 8 a.m. to 3:15 p.m.

Agenda: Living Beyond Cancer: Pediatric Survivorship.

Place: Adam's Mark Denver, 1550 Court Place, Denver, CO 80202.

Open: September 5, 2003, 7 p.m. to 9 p.m.

Agenda: Town Hall Meeting.

Place: Adam's Mark Denver, 1550 Court Place, Denver, CO 80202.

Closed: September 6, 2003, 9 a.m. to 12 p.m.

Agenda: To review and evaluate discussion of prepublication manuscripts on children's survivorship.

Place: Adam's Mark Denver, 1550 Court Place, Denver, CO 80202.

Contact Person: Maureen O. Wilson, PhD, Executive Secretary, National Cancer Institute, National Institutes of Health, 31 Center Drive, Building 31, Room 3A18, Bethesda, MD 20892, 301/496–1148.

This meeting is being published less than 15 days prior to the meeting due to scheduling conflicts.

Any interested person may file written comments with the committee by forwarding the statement to the Contact Person listed on this notice. The statement should include the name, address, telephone number and, when applicable, the business or professional affiliation of the interested person.

Information is also available on the Institute's/Center's home page: deainfo.nci.nih.gov/advisory/pcp/pcp.htm, where an agenda and any additional information for the meeting will be posted when available.

(Catalogue of Federal Domestic Assistance Program Nos. 93.932, Cancer Construction; 93.393, Cancer Cause and Prevention Research; 93.394, Cancer Detection and Diagnosis Research; 93.395, Cancer Treatment Research; 93.396, Cancer Biology Research; 93.397, Cancer Centers Support; 93.398, Cancer Research Manpower; 93.399, Cancer Control, National Institutes of Health, HHS)

Dated: August 20, 2003.

LaVerne Y. Stringfield,

Director, Office of Federal Advisory Committee Policy.

[FR Doc. 03–21852 Filed 8–26–03; 8:45 am]

BILLING CODE 4140–01–M

DEPARTMENT OF HEALTH AND HUMAN SERVICES

National Institutes of Health

National Human Genome Research Institute; Notice of Meeting

Pursuant to section 10(d) of the Federal Advisory Committee Act, as amended (5 U.S.C. Appendix 2), notice is hereby given of a meeting of the National Advisory Council for Human Genome Research.

The meeting will be open to the public as indicated below, with attendance limited to space available. Individuals who plan to attend and need special assistance, such as sign language interpretation or other reasonable accommodations, should notify the Contract Person listed below in advance of the meeting.

The meeting will be closed to the public in accordance with the provisions set forth in sections 552(c)(4) and 552b(c)(6), Title 5 U.S.C. as amended. The grant applications and/or contract proposals and the discussions could disclose confidential trade secrets or commercial property such as patentable material, and personal information concerning individuals associated with the grant applications and/or contract proposals, the disclosure of which would constitute a clearly unwarranted invasion of personal privacy.

Name of Committee: National Advisory Council for Human Genome Research.

Date: September 14–16, 2003.

Closed: September 14, 2003, 7 p.m. to 10 p.m.

Agenda: To review and evaluate grant applications and/or proposals.

Place: Hyatt Regency Bethesda, One Bethesda Metro Center, 7400 Wisconsin Avenue, Bethesda, MD 20814.

Open: September 15, 2003, 8.30 a.m. to 3 p.m.

Agenda: To discuss matters of program relevance.

Place: Hyatt Regency Bethesda, One Bethesda Metro Center, 7400 Wisconsin Avenue, Bethesda, MD 20814.

Closed: September 15, 2003, 3 p.m to adjournment on September 16, 2003.

Agenda: To review and evaluate grant applications and/or proposals.

Place: Hyatt Regency Bethesda, One Bethesda Metro Center, 7400 Wisconsin Avenue, Bethesda, MD 20814.

Contact Person: Mark S. Guyer, Director for Extramural Research Assistant, Director for Scientific Coordination, National Human Genome Research Institute, 31 Center Drive, MSC 2033, Building 31. Room B2B07, Bethesda, MD 20892, 301–435–5536, *guyerm@mail.nih.gov.*

(Catalogue of Federal Domestic Assistance Program Nos. 93.172, human Genome Research, National Institutes of Health, HHS)

Dated: August 20, 2003.

LaVerne Y. Stringfield,

Director, Office of Federal Advisory Committee Policy.

[FR Doc. 03–21856 Filed 8–26–03; 8:45 am]

BILLING CODE 4140–01–M

DEPARTMENT OF HEALTH AND HUMAN SERVICES

National Institutes of Health

National Institute of Dental & Craniofacial Research; Notice of Meeting

Pursuant to section 10(d) of the Federal Advisory Committee Act, as amended (5 U.S.C. Appendix 2), notice is hereby given of a meeting of the National Advisory Dental and Crainofacial Research Council.

The meeting will be open to the public as indicated below, with attendance limited to space available. Individuals who plan to attend and need special assistance, such as sign language interpretation or other reasonable accommodations, should notify the Contact Person listed below in advance of the meeting.

The meeting will be closed to the public in accordance with the provisions set forth in sections 552b(c)(4) and 552b(c)(6), Title 5 U.S.C., as amended. The grant applications and/or contract proposals and the discussions could disclose confidential trade secrets or commercial property such as patentable material, and personal information concerning individuals associated with the grant applications and/or contract proposals, the disclosure of which would constitute a clearly unwarranted invasion of personal privacy.

Name of Committee: National Advisory Dental and Crainofacial Research Council.

Date: September 18, 2003.

Open: 8:30 a.m. to 12:30 p.m.

Agenda: Director's Comments, Scientific Presentations, Concepts, Reports.

Place: National Institutes of Health, Building 31, 31 Center Drive, Bethesda, MD 20892.

Closed: 12:30 p.m. to 5 p.m.

Agenda: To review and evaluate grant applications and/or proposals.

Place: National Institutes of Health, Building 31, 31 Center Drive, Bethesda, MD 20892.

Contact Person: J. Ricardo Martinez, MD, MPH, Associate Director for Program Development, Office of the Director, National Institute of Dental & Craniofacial Research, 31 Center Drive, Bldg. 31, Rm. 5B55, Bethesda, MD 20892, (301) 451–6229.

Information is also available on the Institute's/Center's home page: *www.nidcr.nih.gov/discover/nadrc/index.htm*, where an agenda and any additional information for the meeting will be posted when available.

(Catalogue of Federal Domestic Assistance Program Nos. 93.121, Oral Diseases and Disorders Research, National Institutes of Health, HHS)

Dated: August 20, 2003.

LaVerne Y. Stringfield,

Director, Office of Federal Advisory Committee Policy.

[FR Doc. 03–21853 Filed 8–26–03; 8:45 am]

BILLING CODE 4140–01–M

DEPARTMENT OF HEALTH AND HUMAN SERVICES

National Institutes of Health

National Institute of Neurological Disorders and Stroke; Notice of Meetings

Pursuant to section 10(d) of the Federal Advisory Committee Act, as amended (5 U.S.C. Appendix 2), notice is hereby given of meetings of the National Advisory Neurological Disorders and Stroke Council.

The meetings will be open to the public as indicated below, with attendance limited to space available. Individuals who plan to attend and need special assistance, such as sign language interpretation or other reasonable accommodations, should notify the Contact Person listed below in advance of the meeting.

The meetings will be closed to the public in accordance with the provisions set forth in sections 552b(c)(4) and 552b(c)(6), Title 5 U.S.C., as amended. The grant applications and the discussions could disclose confidential trade secrets or commercial property such as patentable material, and personal information concerning individuals associated with the grant applications, the disclosure of which would constitute a clearly unwarranted invasion of personal privacy.

Name of Committee: National Advisory Neurological Disorders and Stroke Council, Training and Career Development Subcommittee.

Date: September 17, 2003.

Time: 8 p.m. to 10 p.m.

Agenda: To discuss the training programs of the Institute.

Place: Hyatt Regency Bethesda, One Bethesda Metro Center, 7400 Wisconsin Avenue, Bethesda, MD 20814.

Contact Person: Henry Khachaturian, PhD, Training and Special Programs Officer, National Institute of Neurological Disorders and Stroke, National Institutes of Health, 6001 Executive Blvd., Suite 2154, MSC 9527, Bethesda, MD 20892–9527, 301–496–4188, *hk11b@nih.gov.*

Name of Committee: National Advisory Neurological Disorders and Stroke Council, Infrastructure, Neuroinformatics, and Computational Neuroscience Subcommittee.

Date: September 18, 2003.

Time: 8 a.m. to 10 a.m.

Agenda: To discuss research mechanisms and infrastructure needs.

Place: National Institutes of Health, Building 31, 31 Center Drive, Conference Room 7, Bethesda, MD 20892.

Contact Person: Robert Baughman, MD, Associate Director for Technology Development, National Institute of Neurological Disorders and Stroke, National Institutes of Health, 6001 Executive Blvd., Suite 2137, MSC 9527, Bethesda, MD 20892–9527, (301) 496–1779.

Name of Committee: National Advisory Neurological Disorders and Stroke Council, Clinical Trials Subcommittee.

Date: September 18, 2003.

Open: 8 a.m. to 8:30 a.m.

Agenda: To discuss clinical trials policy.

Place: National Institutes of Health, Building 31, 31 Center Drive, Conference Room 10, Bethesda, MD 20892.

Closed: 8:30 a.m. to 10 a.m.

Agenda: To review and evaluate grant applications.

Place: National Institutes of Health, Building 31, 31 Center Drive, Conference Room 10, Bethesda, MD 20892.

Contact Person: John Marler, MD, Associate Director for Clinical Trials, National Institute of Neurological Disorders and Stroke, National Institutes of Health, 6001 Executive Blvd., Suite 2216, Bethesda, MD 20892, (301) 496–9135, *jm137f@nih.gov.*

Name of Committee: National Advisory Neurological Disorders and Stroke Council.

Date: September 18–19, 2003.

Open: September 18, 2003, 10:30 a.m. to 5 p.m.

Agenda: Report by the Director, NINDS; Report by the Director, Division of Extramural Research and other administrative and program developments.

Place: National Institutes of Health, Building 31, 31 Center Drive, Conference Room 10, Bethesda, MD 20892.

Closed: September 19, 2003, 8 a.m. to 11 a.m.

Agenda: To review and evaluate grant applications.

Place: National Institutes of Health, Building 31, 31 Center Drive, Conference Room 10, Bethesda, MD 20892.

Contact Person: Constance W. Atwell, PhD, Associate Director for Extramural Research, National Institute of Neurological Disorders and Stroke, National Institutes of Health, Neuroscience Center, 6001 Executive Blvd., Suite 3309, MSC 9531, Bethesda, MD 20892–9531, (301) 496–9248.

Information is also available on the Institute's/Center's home page: *http://www.ninds.nih.gov*, where an agenda and any additional information for the meeting will be posted when available.

(Catalogue of Federal Domestic Assistance Program Nos. 93.853, Clinical Research Related to Neurological Disorders; 93.854, Biological Basis Research in the Neurosciences, National Institutes of Health, HHS)

Dated: August 20, 2003.

LaVerne Y. Stringfield,

Director, Office of Federal Advisory Committee Policy.

[FR Doc. 03–21854 Filed 8–25–03; 8:45 am]

BILLING CODE 4140–01–M

DEPARTMENT OF HEALTH AND HUMAN SERVICES

National Institutes of Health

National Institute of Child Health and Human Development; Notice of Closed Meeting

Pursuant to section 10(d) of the Federal Advisory Committee Act, as amended (5 U.S.C. Appendix 2), notice is hereby given of the following meeting.

The meeting will be closed to the public in accordance with the provisions set forth in sections 552b(c)(4) and 552b(c)(6), Title 5 U.S.C., as amended. The contract proposals and the discussions could disclose confidential trade secrets or commercial property such as patentable material, and personal information concerning individuals associated with the contract proposals, the disclosure of which would constitute a clearly unwarranted invasion of personal privacy.

Name of Committee: National Institute of Child Health and Human Development Special Emphasis Panel, Concept Review—''The Synthesis and Testing of Norsteroidal and Nonhormonal Male Contraceptive Agents.''

Date: September 17, 2003.

Time: 12 p.m. to 2 p.m.

Agenda: To review and evaluate contract proposals.

Place: National Institutes of Health, 6100 Executive Boulevard, Rockville, MD 20852, (Telephone Conference Call).

Contract Person: Hameed Khan, PhD, Scientific Review Administrator, Division of Scientific Review, National Institute of Child Health and Human Development, National Institutes of Health, 6100 Executive Boulevard, Room 5E01, Bethesda, MD 20892, (301) 435–6902, *khanh@mail.nih.gov.*

(Catalogue of Federal Domestic Assistance Program Nos. 93.864, Population Research; 93.865, Research for Mothers and Children; 93.929, Center for Medical Rehabilitation Research; 93.209, Contraception and Infertility Loan Repayment Program, National Institutes of Health, HHS)

Dated: August 20, 2003.

LaVerne Y. Stringfield,

Director, Office of Federal Advisory Committee Policy.

[FR Doc. 03–21855 Filed 8–26–03; 8:45 am]

BILLING CODE 4140–01–M

DEPARTMENT OF HEALTH AND HUMAN SERVICES

Substance Abuse and Mental Health Services Administration

Agency Information Collection Activities: Proposed Collection; Comment Request

In compliance with section 3506(c)(2)(A) of the Paperwork Reduction Act of 1995 concerning opportunity for public comment on proposed collections of information, the Substance Abuse and Mental Health Services Administration will publish periodic summaries of proposed projects. To request more information on the proposed projects or to obtain a copy of the information collection plans, call the SAMHSA Reports Clearance Officer on (301) 443–7978.

Comments are invited on: (a) Whether the proposed collections of information are necessary for the proper performance of the functions of the agency, including whether the information shall have practical utility; (b) the accuracy of the agency's estimate of the burden of the proposed collection of information; (c) ways to enhance the quality, utility, and clarity of the information to be collected; and (d) ways to minimize the burden of the collection of information on respondents, including through the use of automated collection techniques or other forms of information technology.

Proposed Project: Protection and Advocacy for Individuals With Mental Illness (PAIMI) Annual Program Performance Report (OMB No. 0930–0169, Revision)

The Protection and Advocacy for Individuals with Mental Illness (PAIMI) Act (42 U.S.C. 10801 *et seq.*) authorized funds to support protection and advocacy services on behalf of individuals with significant (severe) mental illnesses (adults) and significant (severe) emotional impairments (children) who are at risk for abuse (including incidents of seclusion, restraint and fatalities related to such incidents), neglect, and other civil rights violations while residing in a public or private care or treatment facility. This program is managed by SAMHSA's Center for Mental Health Services (CMHS).

Under the PAIMI Act, formula grant awards are made to governor-designated protection and advocacy (P&A) systems in the 50 States, 7 territories, and the District of Columbia (Mayor) to ensure that the rights of individuals with significant mental illnesses and

significant emotional impairments are not violated. Whenever the annual PAIMI appropriation reaches $30 million or more, State P&A systems may serve PAIMI-eligible individuals, as defined under the Act [42 U.S.C. at 10802(4)], residing in the community, including their own homes. However, persons residing in public and private residential care or treatment facilities have priority for all State P&A system PAIMI Program services [42 U.S.C. at 10804(d)].

The PAIMI Act requires State P&A systems to file an annual report on their activities and accomplishments and to provide information on such topics as: numbers of individuals served, types of complaints addressed, and the number of intervention strategies used to resolve the presenting issues, and actual expenditures. Under the Act, there is an Advisory Council which is also required to submit an annual report that assesses the effectiveness of the services provided to, and the activities conducted by, the P&A systems on behalf of PAIMI eligible individuals and their family members. In this submission, CMHS is reinstating information on fiscal year actual budget expenditures and making primarily minor changes to the annual reports. Also, CMHS will consult with the Center for Medicaid and Medicaid Services on mutual issues related to the use of seclusion and restraint in residential care and treatment facilities. The revised report formats will be effective for the PAIMI report due on January 1, 2005. The annual burden estimate is as follows:

	No. of respondents	No. of responses per respondent	Hours per response	Total hour burden
Annual Program Performance Report	57	1	28	1,596
Activities & Accomplishments			(20)	(1,140)
Performance outcomes			(3)	(171)
Expenses			(2)	(114)
Budget			(2)	(114)
Priority statements & objectives			(1)	(57)
Advisory Council Report	57	1	10	570
Total	114			2,166

Send comments to Nancy Pearce, SAMHSA Reports Clearance Officer, Room 16–105, Parklawn Building, 5600 Fishers Lane, Rockville, MD 20857. Written comments should be received within 60 days of this notice.

Dated: August 20, 2003.

Anna Marsh,

Acting Executive Officer, SAMHSA.

[FR Doc. 03–21865 Filed 8–26–03; 8:45 am]

BILLING CODE 4162–20–P

DEPARTMENT OF HEALTH AND HUMAN SERVICES

Substance Abuse and Mental Health Services Administration

Center for Mental Health Services; Notice of Meeting

Pursuant to Pub. L. 92–463, notice is hereby given of the meeting of the Center for Mental Health Services (CMHS) National Advisory Council in September 2003.

A portion of the meeting will be open and will include a roll call, general announcements, Director's and Administrator's Reports, and discussions about the Substance Abuse and Mental Health Service (SAMHSA)'s Grant Review Process, SAMHSA's activities surrounding the Faith-Based Initiative, and President's New Freedom Commission on Mental Health.

Public comments are welcome. Please communicate with the individual listed as contact below for guidance. If anyone needs special accommodations for persons with disabilities please notify the contact listed below.

The meeting will also include the review, discussion, and evaluation of grant applications, which precede this grant review.

Therefore a portion of the meeting will be closed to the public as determined by the SAMHSA Administrator, in accordance with title 5 U.S.C. 552b(c)(6) and 5 U.S.C. App. 2. & 10 (d).

A summary of the meeting and a roster of Council members may be obtained from Ms. Dale Kaufman, Executive Secretary, CMHS, Room 17–99, Parklawn Building, Rockville, Maryland 20857, telephone (301) 443–2660.

Committee Name: CMHS National Advisory Council.

Meeting Date: September 4–5, 2003.

Place: The Doubletree Hotel, The Regency Room, 1750 Rockville Pike, Rockville, Maryland.

Type: Closed: September 4, 2003, 8:30 a.m.–10:30 a.m. Open: September 4, 2003, 11 a.m.–5 p.m. Open: September 5, 2003, 9 a.m.–12:15 p.m.

Contact: Dale Kaufman, MPH, MA, Executive Secretary, 5600 Fishers Lane, Parklawn Building, Room 17–99, Rockville, Maryland 20857. Telephone: (301) 443–2660 and FAX (301) 443–1563.

August 21, 2003.

Toian Vaughn,

Committee Management Officer, Substance Abuse and Mental Health Services Administration.

[FR Doc. 03–21836 Filed 8–26–03; 8:45 am]

BILLING CODE 4162–20–P

DEPARTMENT OF HOMELAND SECURITY

Coast Guard

[USCG–2003–15981]

National Offshore Safety Advisory Committee

AGENCY: Coast Guard, DHS.

ACTION: Notice of meeting.

SUMMARY: The National Offshore Safety Advisory Committee (NOSAC) will meet to discuss various issues relating to offshore safety and security. The meeting will be open to the public.

DATES: NOSAC will meet on Thursday, October 2, 2003, from 9 a.m. to 3 p.m. The meeting may close early if all business is finished. Written material and requests to make oral presentations should reach the Coast Guard on or before September 18, 2003. Requests to have a copy of your material distributed to each member of the committee should reach the Coast Guard on or before September 18, 2003.

ADDRESSES: NOSAC will meet in the Grand Ballroom A, of the Radisson

Hotel New Orleans, 1500 Canal Street, New Orleans, LA 70112. Send written material and requests to make oral presentations to Captain D. L. Scott, Commandant (G–MSO), U.S. Coast Guard Headquarters, 2100 Second Street SW., Washington, DC 20593–0001. This notice is available on the Internet at *http://dms.dot.gov.*

FOR FURTHER INFORMATION CONTACT: Captain D. L. Scott, Executive Director of NOSAC, or Mr. Jim Magill, Assistant to the Executive Director, telephone 202–267–1082, fax 202–267–4570.

SUPPLEMENTARY INFORMATION: Notice of the meeting is given under the Federal Advisory Committee Act, 5 U.S.C. App. 2.

Agenda of Meeting

The agenda includes the following items:

(1) Report on issues concerning the International Maritime Organization and the International Organization for Standardization.

(2) Report by the Coast Guard and subcommittee chairman on public meetings held and development of maritime and offshore security rules.

(3) Report from Task Force on development and implementation of the Standards of Training, Certification and Watchkeeping for Seafarers (STCW) Convention for offshore supply vessels (OSVs).

(4) Progress report from the Subcommittee on Pipeline-Free Anchorages.

(5) Status report on Coast Guard/ Minerals Management Service Inspection of Fixed Facilities.

(6) Revision of 33 CFR chapter I, subchapter N, Outer Continental Shelf activities.

(7) Revision of 33 CFR chapter I, subchapter NN, Deepwater Ports rules, and status of submissions for LNG deepwater ports.

Procedural

The meeting is open to the public. Please note that the meeting may close early if all business is finished. At the Chair's discretion, members of the public may make oral presentations during the meeting. If you would like to make an oral presentation at the meeting, please notify the Executive Director no later than September 18, 2003. Written material for distribution at the meeting should reach the Coast Guard no later than September 18, 2003. If you would like a copy of your material distributed to each member of the committee in advance of the meeting, please submit 25 copies to the Executive Director no later than September 18, 2003.

Information on Services for Individuals with Disabilities

For information on facilities or services for individuals with disabilities or to request special assistance at the meeting, contact the Executive Director as soon as possible.

Dated: August 21, 2003.

Joseph J. Angelo,

Director of Standards, Marine Safety, Security and Environmental Protection.

[FR Doc. 03–21955 Filed 8–26–03; 8:45 am]

BILLING CODE 4910–15–U

DEPARTMENT OF HOUSING AND URBAN DEVELOPMENT

[Docket No. FR–4818–N–11]

Notice of Proposed Information Collection for Public Comment: 2004 American Housing Survey—Metropolitan Sample

AGENCY: Office Policy Development and Research, HUD.

ACTION: Notice.

SUMMARY: The proposed information collection requirement described below will be submitted to the Office of Management and Budget (OMB) for approval as required by the Paperwork Reduction Act of 1995. The Department is soliciting public comments on the subject proposal.

DATES: *Comments Due Date:* October 27, 2003.

ADDRESSES: Interested persons are invited to submit comments regarding this proposal. Comments should refer to the proposal by name and/or OMB Control Number and should be sent to: Reports Liaison Officer, Office of Policy Development and Research, Department of Housing and Urban Development, 451 7th Street, SW., Room 8226, Washington, DC 20410.

FOR FURTHER INFORMATION CONTACT: Ronald J. Sepanik at (202) 708–1060, Ext. 5887 (this is not a toll-free number), or Jane M. Kneessi, Bureau of the Census, HHES Division, Washington, DC 20233, (301) 763–3235 (this is not a toll-free number).

SUPPLEMENTARY INFORMATION: The Department will submit the proposed information collection to OMB for review, as required by the Paperwork Reduction Act of 1995 (44 U.S.C. chapter 35, as amended).

This Notice is soliciting comments from members of the public and affected agencies concerning the proposed collection of information to: (1) Evaluate whether the proposed collection of information is necessary for the proper performance of the functions of the agency, including whether the information will have practical utility; (2) evaluate the accuracy of the agency's estimate of the burden of the proposed collection of information; (3) enhance the quality, utility, and clarity of the information to be collected; and (4) minimize the burden of the collection of information on those who are to respond; including through the use of appropriate automated collection techniques or other forms of information technology, *e.g.,* permitting electronic submission of responses.

This notice also lists the following information:

Title of Proposal: 2004 American Housing Survey—Metropolitan Sample.

OMB Control Number: 2528–0016.

Description of the Need for the Information and Proposed Use: The 2004 American Housing Survey Metropolitan Sample (AHS–MS) provides a periodic measure of the size and composition of the housing inventory in selected metropolitan areas. Title 12, United States Code, sections 1701Z–1, 1701Z–2(g), and 1710Z–10a mandate the collection of this information.

The 2004 survey is similar to previous AHS–MS surveys and collects data on subjects such as the amount and types of changes in the inventory, the physical condition of the inventory, the characteristics of the occupants, the persons eligible for and beneficiaries of assisted housing by race and ethnicity, and the number and characteristics of vacancies.

Policy analysts, program managers, budget analysts, and Congressional staff use AHS data to advise executive and legislative branches about housing conditions and the suitability of public policy initiatives. Academic researchers and private organizations also use AHS data in efforts of specific interest and concern to their respective communities.

The Department of Housing and Urban Development (HUD) needs the AHS data for two important uses.

1. With the data, policy analysts can monitor the interaction among housing needs, demand and supply, as well as changes in housing conditions and costs, to aid in the development of housing policies and the design of housing programs appropriate for different target groups, such as first-time home buyers and the elderly.

2. With the data, HUD can evaluate, monitor, and design HUD programs to improve efficiency and effectiveness.

Agency Form Numbers: Computerized Versions of AHS–62 and AHS–63.

Members of affected public: Households.

Estimation of the total number of hours needed to prepare the information collection including number of respondents, frequency of response, and hours of response:

Number of Respondents: 59,500.

Estimate Responses per Respondent: 1 every six years.

Time per Respondent: 34 minutes.

Total Hours to Respond: 33,716.

Respondent's Obligation: Voluntary.

Status of the Proposed Information Collection: Pending OMB approval.

Authority: Title 13 U.S.C. 9(a), and title 12, U.S.C. 170z–1 *et seq.*

Dated: August 20, 2003.

Darlene F. Williams,

General, Deputy Assistant Secretary.

[FR Doc. 03–21927 Filed 8–26–03; 8:45 am]

BILLING CODE 4210–62–M

DEPARTMENT OF HOUSING AND URBAN DEVELOPMENT

[Docket No. FR–4820–N–34]

Notice of Proposed Information Collection: Comment Request; Late Request for Endorsement Procedures

AGENCY: Office of the Assistant Secretary for Housing-Federal Housing Commissioner, HUD.

ACTION: Notice.

SUMMARY: The proposed information collection requirement described below will be submitted to the Office of Management and Budget (OMB) for review, as required by the Paperwork Reduction Act. The Department is soliciting public comments on the subject proposal.

DATES: *Comments Due Date:* October 27, 2003.

ADDRESSES: Interested persons are invited to submit comments regarding this proposal. Comments should refer to the proposal by name and/or OMB Control Number and should be sent to: Wayne Eddins, Reports Management Officer, Department of Housing and Urban Development, 451 7th Street, SW., L'Enfant Plaza Building, Room 8003, Washington, DC 20410 or *Wayne_Eddins@hud.gov.*

FOR FURTHER INFORMATION CONTACT: Vance T. Morris, Director, Office of Single Family Program Development, Department of Housing and Urban Development, 451 7th Street, SW., Washington, DC 20410, telephone (202) 708–2121 (this is not a toll free number) for copies of the proposed forms and other available information.

SUPPLEMENTARY INFORMATION: The Department is submitting the proposed information collection to OMB for review, as required by the Paperwork Reduction Act of 1995 (44 U.S.C. chapter 35, as amended).

This notice is soliciting comments from members of the public and affected agencies concerning the proposed collection of information to: (1) Evaluate whether the proposed collection is necessary for the proper performance of the functions of the agency, including whether the information will have practical utility; (2) evaluate the accuracy of the agency's estimate of the burden of the proposed collection of information; (3) enhance the quality, utility, and clarity of the information to be collected; and (4) minimize the burden of the collection of information on those who are to respond; including the use of appropriate automated collection techniques or other forms of information technology, *e.g.,* permitting electronic submissive of responses.

This notice also lists the following information:

Title of Proposal: Late Request for Endorsement Procedures.

OMB Control Number, if applicable: 2502—New.

Description of the need for the information and proposed use: The information collection establishes the criteria for defining late requests for endorsement for initial submissions and reconsiderations. When submitting a late request for endorsement, a lender must certify that the borrower's mortgage payments are current and made within the month due, all escrows are current, and no payments were made by the lender to affect an acceptable payment history. The lender will also submit a copy of the payment history or ledger as additional documentation.

Agency form numbers, if applicable: None.

Estimation of the total numbers of hours needed to prepare the information collection including number of respondents, frequency of response, and hours of response: The estimated number of respondents is 12,000 generating approximately 300,000 annual responses; frequency of response is on occasion; the estimated time needed to prepare the response varies from 6 minutes to 30 minutes; and the estimated annual burden hours requested is 120,000.

Status of the proposed information collection: New collection.

Authority: The Paperwork Reduction Act of 1995, 44 U.S.C. chapter 35, as amended.

Dated: August 20, 2003.

John C. Weicher,

Assistant Secretary for Housing-Federal Housing Commissioner.

[FR Doc. 03–21928 Filed 8–26–03; 8:45 am]

BILLING CODE 4210–27–M

DEPARTMENT OF HOUSING AND URBAN DEVELOPMENT

[Docket No. FR–4817–N–11]

Notice of Proposed Information Collection for Public Comment—Public Housing Financial Management Template

AGENCY: Office of the Assistant Secretary for Public and Indian Housing, HUD.

ACTION: Notice.

SUMMARY: The proposed information collection requirement described below will be submitted to the Office of Management and Budget (OMB) for review, as required by the Paperwork Reduction Act. The Department is soliciting public comments on the subject proposal.

DATES: *Comments Due Date:* October 27, 2003.

ADDRESSES: Interested persons are invited to submit comments regarding this proposal. Comments should refer to the proposal by name and/or OMB Control number and should be sent to: Mildred M. Hamman, Reports Liaison Officer, Public and Indian Housing, Department of Housing and Urban Development, 451 7th Street, SW., Room 4249, Washington, DC 20410–5000.

FOR FURTHER INFORMATION CONTACT: Mildred M. Hamman, (202) 708–0614, extension 4128, for copies of the proposed forms and other available documents. (This is not a toll-free number).

SUPPLEMENTARY INFORMATION: The Department will submit the proposed information collection to OMB for review, as required by the Paperwork Reduction Act of 1995 (44 U.S.C. chapter 35, as amended).

This notice is soliciting comments from members of the public and affected agencies concerning the proposed collection of information to: (1) Evaluate whether the proposed collection of information is necessary for the proper performance of the functions of the agency, including whether the information will have practical utility; (2) evaluate the accuracy of the agency's estimate of the burden of the proposed collection of information; (3) enhance the quality, utility, and clarity of the

information to be collected; and (4) minimize the burden of the collection of information on those who are to respond, including through the use of appropriate automated collection techniques or other forms of information technology; *e.g.*, permitting electronic submission of responses.

The Public Housing Financial Management template is the set of documents on which the Department collects financial information from Public Housing Agencies (PHAs). Pursuant to the Public Housing Assessment System (PHAS) regulation, PHAs annually submit both unaudited and audited financial information to the Department using the financial management template. In accordance with HUD regulatory requirements, PHAs enter the financial information on the template and electronically submit to HUD.

This notice also lists the following information:

Title of Proposal: Public Housing Financial Management Template.

OMB Control Number: 2535–0107.

Description of the need for the information and proposed use: The Uniform Financial Reporting Standards (UFRS) for HUD Housing Programs requires PHAs to submit financial data electronically, using Generally Accepted Accounting Principles (GAAP), in a prescribed format. The financial management template is that format. HUD uses the financial information it collects from PHAs to assist in the evaluation and assessment of the PHAs overall condition. Requiring PHAs to report electronically has enabled HUD to provide a more comprehensive assessment of the PHAs receiving Federal funds.

Agency form numbers, if applicable: Not applicable.

Members of affected public: Local, State, or tribal governments, not-for-profit institutions.

Estimation of the total number of hours needed to prepare the information collection including number of respondents, frequency of response, and hours of response: 3,173 PHAs; annual submission per PHA; average hours for PHA response is 10 hours; the total reporting burden is 31,961 hours.

Status of the proposed information collection: Extension of a currently approved collection.

Authority: Section 3506 of the Paperwork Reduction Act of 1995, 44 U.S.C. chapter 35, as amended.

Dated: August 20, 2003.

Michael Liu,

Assistant Secretary for Public and Indian Housing.

[FR Doc. 03–21929 Filed 8–26–03; 8:45 am]

BILLING CODE 4210–33–P

DEPARTMENT OF HOUSING AND URBAN DEVELOPMENT

[Docket No. FR–4817–N–12]

Notice of Proposed Information Collection for Public Comment—Customer Service and Satisfaction Survey

AGENCY: Office of the Assistant Secretary for Public and Indian Housing, HUD.

ACTION: Notice.

SUMMARY: The proposed information collection requirement described below will be submitted to the Office of Management and Budget (OMB) for review, as required by the Paperwork Reduction Act. The Department is soliciting public comments on the subject proposal.

DATES: *Comments Due Date:* October 27, 2003.

ADDRESSES: Interested persons are invited to submit comments regarding this proposal. Comments should refer to the proposal by name and/or OMB Control number and should be sent to: Mildred M. Hamman, Reports Liaison Officer, Public and Indian Housing, Department of Housing and Urban Development, 451 7th Street, SW., Room 4249, Washington, DC 20410–5000.

FOR FURTHER INFORMATION CONTACT: Mildred M. Hamman, (202) 708–0614, extension 4128, for copies of the proposed forms and other available documents. (This is not a toll-free number).

SUPPLEMENTARY INFORMATION: The Department will submit the proposed information collection to OMB for review, as required by the Paperwork Reduction Act of 1995 (44 U.S.C. chapter 35, as amended).

This notice is soliciting comments from members of the public and affected agencies concerning the proposed collection of information to: (1) Evaluate whether the proposed collection of information is necessary for the proper performance of the functions of the agency, including whether the information will have practical utility; (2) evaluate the accuracy of the agency's estimate of the burden of the proposed collection of information; (3) enhance the quality, utility, and clarity of the information to be collected; and (4) minimize the burden of the collection of information on those who are to respond, including through the use of appropriate automated collection techniques or other forms of information technology; *e.g.*, permitting electronic submission of responses.

The Customer Service and Satisfaction Survey is the means by which HUD surveys the residents of HUD assisted and insured housing. The survey assesses resident satisfaction with housing services and living conditions.

This notice also lists the following information:

Title of Proposal: Customer Service and Satisfaction Survey.

OMB Control Number: 2507–0001.

Description of the need for the information and proposed use: HUD conducts a resident survey of assisted and insured housing residents on an annual basis. A random sample of residents in each PHA is surveyed annually in accordance with requirements of the Public Housing Assessment System (PHAS) regulation. PHAs are required to announce the survey and follow up on substandard scores. Approximately twenty percent of multifamily property residents are surveyed annually from a random sample of selected properties. No implementation or follow-up is required.

Agency form numbers, if applicable: Not applicable.

Members of affected public: Individuals or households, businesses or other for-profit, not-for-profit institutions.

Estimation of the total number of hours needed to prepare the information collection including number of respondents, frequency of response, and hours of response: 631,261 residents receive the survey, 3,173 PHAS submit implementation and follow-up plans, HUD receives a total 269,091 responses from residents and PHAs (total based on 47% resident response rate for survey); annual submission per resident respondents and PHAs; average hours for resident response is 15 minutes; average hours for PHA response is 5.45 hours; the total reporting burden is 82,903 hours.

Status of the proposed information collection: Extension of a currently approved collection.

Authority: Section 3506 of the Paperwork Reduction Act of 1995, 44 U.S.C. chapter 35, as amended.

Dated: August 20, 2003.

Michael Liu,

Assistant Secretary for Public and Indian Housing.

[FR Doc. 03–21930 Filed 8–26–03; 8:45 am]

BILLING CODE 4210–33–P

DEPARTMENT OF HOUSING AND URBAN DEVELOPMENT

[Docket No. FR–4817–N–13]

Notice of Proposed Information Collection for Public Comment—Management Operations Certification

AGENCY: Office of the Assistant Secretary for Public and Indian Housing, HUD.

ACTION: Notice.

SUMMARY: The proposed information collection requirement described below will be submitted to the Office of Management and Budget (OMB) for review, as required by the Paperwork Reduction Act. The Department is soliciting public comments on the subject proposal.

DATES: *Comments Due Date:* October 27, 2003.

ADDRESSES: Interested persons are invited to submit comments regarding this proposal. Comments should refer to the proposal by name and/or OMB Control number and should be sent to: Mildred M. Hamman, Reports Liaison Officer, Public and Indian Housing, Department of Housing and Urban Development, 451 7th Street, SW., Room 4249, Washington, DC 20410–5000.

FOR FURTHER INFORMATION CONTACT: Mildred M. Hamman, (202) 708–0614, extension 4128, for copies of the proposed forms and other available documents. (This is not a toll-free number).

SUPPLEMENTARY INFORMATION: The Department will submit the proposed information collection to OMB for review, as required by the Paperwork Reduction Act of 1995 (44 U.S.C. chapter 35, as amended).

This notice is soliciting comments from members of the public and affected agencies concerning the proposed collection of information to: (1) Evaluate whether the proposed collection of information is necessary for the proper performance of the functions of the agency, including whether the information will have practical utility; (2) evaluate the accuracy of the agency's estimate of the burden of the proposed collection of information; (3) enhance the quality, utility, and clarity of the information to be collected; and (4) minimize the burden of the collection of information on those who are to respond, including through the use of appropriate automated collection techniques or other forms of information technology; *e.g.*, permitting electronic submission of responses.

The Management Operations template is the set of documents on which the Department collects management operations information from Public Housing Agencies (PHAs). Pursuant to the Public Housing Assessment System (PHAS) regulation, PHAs are required annually to submit specific management operations information. In accordance with the requirements of PHAS, PHAs enter the required data on the templates, certify to the data entered, and electronically submit the information to HUD.

This notice also lists the following information:

Title of Proposal: Management Operations Certification.

OMB Control Number: 2535–0106.

Description of the need for the information and proposed use: To meet the requirements of the PHAS rule, the Department has developed the management operations template that PHAs use to annually submit specific management information to HUD electronically. HUD uses the management operations information it collects from each PHA to assist in the evaluation and assessment of the PHAs overall condition. Requiring PHAs to report electronically has enabled HUD to provide a more comprehensive assessment of the PHAs receiving federal funds from HUD.

Agency form numbers, if applicable: Form HUD–50072.

Members of affected public: Local, State, or tribal governments, not-for-profit institutions.

Estimation of the total number of hours needed to prepare the information collection including number of respondents, frequency of response, and hours of response: Management Operations Certification: 3,169 PHAs; annual submission per PHA; average hours for PHA response is 1.9 hours; the total reporting burden is 6,202.5 hours.

Status of the proposed information collection: Extension of a currently approved collection.

Authority: Section 3506 of the Paperwork Reduction Act of 1995, 44 U.S.C. chapter 35, as amended.

Dated: August 20, 2003.

Michael Liu,

Assistant Secretary for Public and Indian Housing.

[FR Doc. 03–21931 Filed 8–26–03; 8:45 am]

BILLING CODE 4210–33–P

DEPARTMENT OF HOUSING AND URBAN DEVELOPMENT

[Docket No. FR–4815–N–60]

Notice of Submission of Proposed Information Collection to OMB: Survey of New Manufactured (Mobile) Home Placements

AGENCY: Office of the Chief Information Officer, HUD.

ACTION: Notice.

SUMMARY: The proposed information collection requirement described below has been submitted to the Office of Management and Budget (OMB) for review, as required by the Paperwork Reduction Act. The Department is soliciting public comments on the subject proposal.

This survey is used to collect data on the placement of new manufactured (mobile) homes. The data are collected from manufactured home dealers. The principal user, HUD, use the statistics to monitor trends in this type of low-cost housing; to formulate policy, draft legislation, and evaluate programs.

DATES: *Comments Due Date:* September 26, 2003.

ADDRESSES: Interested persons are invited to submit comments regarding this proposal. Comments should refer to the proposal by name and/or OMB approval number (2528–0029) and should be sent to: Lauren Wittenberg, OMB Desk Officer, Office of Management and Budget, Room 10235, New Executive Office Building, Washington, DC 20503; Fax number (202) 395–6974; E-mail *Lauren_Wittenberg@omb.eop.gov.*

FOR FURTHER INFORMATION CONTACT: Wayne Eddins, Reports Management Officer, AYO, Department of Housing and Urban Development, 451 Seventh Street, Southwest, Washington, DC 20410; e-mail *Wayne_Eddins@HUD.gov;* telephone (202) 708–2374. This is not a toll-free number. Copies of the proposed forms and other available documents submitted to OMB may also be obtained through HUD's Information Collection Budget Tracking System at *http://mf.hud.gov.63001/po/i/icbts/.*

SUPPLEMENTARY INFORMATION: The Department has submitted the proposal for the collection of information, as described below, to OMB for review, as required by the Paperwork Reduction Act (44 U.S.C. chapter 35). The notice lists the following information: (1) The title of the information collection proposal; (2) the office of the agency to collect the information; (3) the OMB approval number, if applicable; (4) the description of the need for the

information and its proposed use; (5) the agency form number, if applicable; (6) what members of the public will be affected by the proposal; (7) how frequently information submissions will be required; (8) an estimate of the total number of hours needed to prepare the information submission including number of respondents, frequency of response, and hours of response; (9) whether the proposal is new, an extension, reinstatement, or revision of an information collection requirement; and (10) the name and telephone number of an agency official familiar with the proposal and of the OMB Desk Officer for the Department.

This notice also lists the following information:

Title of Proposal: Survey of New Manufacture (Mobile) Home Placements.

OMB Approval Number: 2528–0029.

Form Numbers: C–MH–9A.

Description of the Need for the Information and its Proposed Use:

This survey is used to collect data on the placement of new manufactured (mobile) homes. The data are collected from manufactured home dealers. The principal user, HUD, use the statistics to monitor trends in this type of low-cost housing; to formulate policy, draft legislation, and evaluate programs.

Respondents: Business or other for-profit.

Frequency of Submission: Monthly.

Reporting Burden: Number of respondents 4,750: Average responses per respondent 2; Total annual responses 9,500; Average burden per response 0.5 hrs.

Total Estimated Burden Hours: 4,750.

Status: Extension of a currently approved collection.

Authority: Section 3507 of the Paperwork Reduction Act of 1995, 44 U.S.C. 35, as amended.

Dated: August 21, 2003.

Wayne Eddins,

Departmental Reports Management Officer, Office of the Chief Information Officer.

[FR Doc. 03–21932 Filed 8–26–03; 8:45 am]

BILLING CODE 4210–72–P

DEPARTMENT OF HOUSING AND URBAN DEVELOPMENT

[Docket No. FR–4491–N–13]

Notice of Availability of a Draft Environmental Impact Statement (EIS) for the Salishan Revitalization Project, City of Tacoma, WA

AGENCY: Office of the Assistant Secretary for Community Planning and Development, HUD.

ACTION: Notice.

SUMMARY: The Department of Housing and Urban Development gives notice to the public, agencies, and Indian tribes that the City of Tacoma, WA acting under its authority as the Responsible Entity for compliance with the national Environmental Policy Act (NEPA) in accordance with 24 CFR 58.4, and jointly the City of Tacoma and Tacoma Housing Authority (THA) acting under their authority as lead agencies in accordance with the State Environmental Policy Act (SEPA) (RCW 43.21) that a Draft Environmental Impact Statement (DEIS) for the redevelopment of the Salishan housing project is available for review and comment. This notice is given in accordance with the Council on Environmental Quality regulations at 40 CFR parts 1500–1508.

Notice is also given that the City of Tacoma as Responsible Entity has decided to combine the National Historic Preservation Ace, section 106 process with the NEPA EIS in accordance with 36 CFR 800.8(c). Comments are also being requested on the Section 106 information presented in the Draft EIS as well as on the section 106 process itself.

DATES: *Comments Due Date:* Comments must be received on or before October 12, 2003. Written comments on the Draft EIS should be addressed to the individual named above under the heading **FOR FURTHER INFORMATION CONTACT.**

Public Meeting: A public comment meeting will be held during the comment period in order to ensure public participation. The public meeting will be held on September 22, 2003, from 5 p.m. to 8 p.m. (childcare and language translation services will be available at the meeting). The public meeting will be held at the following location: Tacoma Housing Authority, Salishan Meeting Rooms, 1724 E. 44th Street, Tacoma, Washington 98404.

FOR FURTHER INFORMATION CONTACT: The DEIS is available on the Internet and can be viewed or downloaded at: *http://govme.cityoftacoma.org/govme/panelBeta/permitInfo/LandUse/landUse.* Copies of the DEIS are also available from: Karie Hayashi, and Land Use Administration Planner, City of Tacoma, 747 Market Street, Tacoma, Washington, 98402; Phone (253) 591–5387; FAX: (253) 591–5433; e-mail *khayashi@cityoftacoma.org*

SUPPLEMENTARY INFORMATION: The Salishan Public Housing Development (Salishan) was originally constructed in 1942 as war-time housing. Located in what is known as the East Side neighborhood, Salishan is bordered on the west by Portland Avenue and on the east by Swan Creek. There are currently 786 housing units on the site, of which 778 are occupied, and other related community/social service buildings.

In 2000, THA submitted a successful HOPE VI grant application for the redevelopment of Salishan. The amount of the HOPE VI grant awarded in connection with the Salishan revitalization project was $35 million. Under the proposed Revitalization Plan, existing housing will be demolished and Salishan will be redeveloped into a mixed-use, mixed-income community of approximately 1,270 to 1,500 units. The project will require the relocation of all existing residents. The new unit mix will incorporate low-income, affordable, and market rate housing with single- and multi-family dwellings, and senior and special needs housing. The redevelopment project will also include a mixture of commercial uses and improvements to community facilities such as expanding the existing health clinic, day care, family investment center, and gymnasium. Alternatives to be considered in the EIS include a no action alternative, a 1,270-unit alternative, and a 1,500-unit development.

Questions may be directed to the individual named above under the heading **FOR FURTHER INFORMATION CONTACT.**

Dated: August 21, 2003.

Roy A. Bernardi,

Assistant Secretary for Community Planning and Development.

[FR Doc. 03–21925 Filed 8–26–03; 8:45 am]

BILLING CODE 4210–29–M

DEPARTMENT OF THE INTERIOR

Fish and Wildlife Service

Receipt of Applications for Permit

AGENCY: Fish and Wildlife Service, Interior.

ACTION: Notice of receipt of applications for permit.

SUMMARY: The public is invited to comment on the following applications to conduct certain activities with endangered species and/or marine mammals.

DATES: Written data, comments or requests must be received by September 26, 2003.

ADDRESSES: Documents and other information submitted with these applications are available for review,

subject to the requirements of the Privacy Act and Freedom of Information Act, by any party who submits a written request for a copy of such documents within 30 days of the date of publication of this notice to: U.S. Fish and Wildlife Service, Division of Management Authority, 4401 North Fairfax Drive, Room 700, Arlington, Virginia 22203; fax 703/358–2281.

FOR FURTHER INFORMATION CONTACT: Division of Management Authority, telephone 703/358–2104.

SUPPLEMENTARY INFORMATION:

Endangered Species

The public is invited to comment on the following application(s) for a permit to conduct certain activities with endangered species. This notice is provided pursuant to section 10(c) of the Endangered Species Act of 1973, *as amended* (16 U.S.C. 1531, *et seq.*). Written data, comments, or requests for copies of these complete applications should be submitted to the Director (address above).

Applicant: Walter H. Fox, Charlotte, NC, PRT–075825

The applicant requests a permit to import the sport-hunted trophy of one male bontebok (*Damaliscus pygargus dorcas*) culled from a captive herd maintained under the management program of the Republic of South Africa for the purpose of survival of the species.

Applicant: Camp Cooley Ranch, Franklin TX, PRT–810353

The applicant requests renewal of a permit to authorize interstate and foreign commerce, export and cull of excess male barasingha (*Cervus duvauceli*) from their captive herd for the purpose of enhancement of the survival of the species. This notification covers activities conducted by the applicant over a five-year period. Permittee must apply for renewal annually.

Endangered Marine Mammals and Marine Mammals

The public is invited to comment on the following application(s) for a permit to conduct certain activities with endangered marine mammals and/or marine mammals. The application(s) was/were submitted to satisfy requirements of the Endangered Species Act of 1973, *as amended* (16 U.S.C. 1531, *et seq.*) and/or the Marine Mammal Protection Act of 1972, *as amended* (16 U.S.C. 1361 *et seq.*), and the regulations governing endangered species (50 CFR part 17) and/or marine mammals (50 CFR part 18). Written data, comments, or requests for copies of the complete applications or requests for a public hearing on these applications should be submitted to the Director (address above). Anyone requesting a hearing should give specific reasons why a hearing would be appropriate. The holding of such a hearing is at the discretion of the Director.

Applicant: Virgil R. Graber, Orrville, OH, PRT–073810

The applicant requests a permit to import a polar bear (*Ursus maritimus*) sport hunted from the Northern Beaufort Sea polar bear population in Canada prior to April 30, 1994, for personal use.

Dated: August 15, 2003.

Charles S. Hamilton,

Senior Permit Biologist, Branch of Permits, Division of Management Authority.

[FR Doc. 03–21902 Filed 8–26–03; 8:45 am]

BILLING CODE 4310–55–P

DEPARTMENT OF THE INTERIOR

Fish and Wildlife Service

Availability of Threemile Canyon Farms Multi-Species Candidate Conservation Agreement With Assurances, and Related Draft Environmental Assessment, Morrow and Gilliam Counties, Oregon

AGENCY: Fish and Wildlife Service, Interior.

ACTION: Notice of availability.

SUMMARY: Threemile Canyon Farms, LLC (Farm), Portland General Electric (PGE), The Nature Conservancy (TNC), and the Oregon Department of Fish and Wildlife (ODFW) have applied to the U.S. Fish and Wildlife Service (Service) for Enhancement of Survival Permits pursuant to section 10(a)(1)(A) of the Endangered Species Act of 1973, as amended (Act) (16 U.S.C. 1531 *et seq.*). The permit applications include a proposed Multi-Species Candidate Conservation Agreement with Assurances (MSCCAA) between the Farm, PGE, TNC, ODFW, and the Service. The proposed term of the permits and MSCCAA is 25 years.

Under the proposed MSCCAA, the parties would implement habitat management, operational modifications, and conservation measures for four non-listed species over approximately 93,000 acres (Covered Area) in northeast Oregon. The Service has prepared a draft Environmental Assessment pursuant to the National Environmental Policy Act of 1969 (NEPA) (42 U.S.C. 4321 *et seq.*) and associated regulations (40 CFR 1500–1508) for approval of the MSCCAA and issuance of the permits.

We request comments from the public on the permit applications, proposed MSCCAA and the draft Environmental Assessment, all of which are available for review (see ''Document Availability'' in the **SUPPLEMENTARY INFORMATION** section).

DATES: Written comments must be received from interested parties on or before October 14, 2003.

ADDRESSES: You may submit comments by postal mail/commercial delivery, facsimile, or by e-mail. If you use postal mail/commercial delivery or facsimile, please address your written comments to Kemper McMaster, State Supervisor, Fish and Wildlife Service, 2600 S.E. 98th Ave., Suite 100, Portland, Oregon 97266, facsimile (503) 231–6195. If you use e-mail, address your comments to *threemilemsccaa@r1.fws.gov.* Include your name and mailing address in your message.

FOR FURTHER INFORMATION CONTACT: Rich Szlemp, Fish and Wildlife Biologist, Oregon State Office at (503) 231–6179.

SUPPLEMENTARY INFORMATION:

Document Availability

You may obtain copies of the documents for review by contacting the above named individual (**FOR FURTHER INFORMATION CONTACT**) or by making an appointment to view the documents at the above address (see **ADDRESSES**) during normal business hours. You may also view the documents on the Internet at *http://www.davidevansandassociates.com/projects/threemile.html.*

Background

Under a Candidate Conservation Agreement with Assurances, participating landowners voluntarily implement conservation activities on their property to benefit nonlisted species that are proposed or candidates for listing under the Act, or other sensitive species. Landowners may be willing to implement measures that enhance populations of sensitive species on their property, but may be reluctant to do so because of potential land-use restrictions that could occur should the species eventually be listed under the Act. As a result of this potential regulatory concern, Candidate Conservation Agreements with Assurances encourage private and other non-Federal property owners to implement conservation efforts and reduce threats to non-listed species by assuring landowners that they will not be subjected to increased property use restrictions beyond those identified in

the agreement. Under the Final Policy for Candidate Conservation Agreements with Assurances (64 FR 32726), the Service must determine that the benefits of the conservation measures implemented by the property owner, when combined with those benefits that would be achieved if it is assumed that conservation measure were also to be implemented on other necessary properties, would preclude or remove any need to list the covered species. Application requirements and issuance criteria for Enhancement of Survival Permits through Candidate Conservation Agreements with Assurances are found in 50 CFR 17.22(d) and 17.32(d). These permits allow the incidental take of any covered species in accordance with the terms of the permits and accompanying agreement, should the species be listed during the term of the permit. Section 9 of the Act and its implementing Federal regulations prohibit the ''take'' of a species listed as endangered or threatened. Take is defined under the Act as including to harass, harm, pursue, hunt, shoot, wound, kill, trap, capture, or collect listed animal species, or to attempt to engage in such conduct (16 U.S.C. 1538). ''Harm'' is further defined by regulation as significant habitat modification or degradation that results in death or injury to listed species by significantly impairing essential behavioral patterns; including breeding, feeding, or sheltering (50 CFR 17.3).

In 1963, the State of Oregon leased approximately 93,000 acres of property to the Boeing Company. In 1974, the Boeing Company leased the property to Boeing Agri-Industrial Company (BAIC), a wholly-owned subsidiary of the Boeing Company. In 2000, BAIC was sold to the Farm and in 2002, the Farm, by and through its wholly-owned subsidiary BAIC, Inc., purchased the property from the State of Oregon. Since 1974, the majority of the property has been used for farming purposes. PGE owns and controls approximately 3,520 acres within the Farm property boundary. The Boeing Company continues to lease approximately 2,700 acres within the Farm property described as the ''radar range'' in the agreement. The Boeing lease is set to expire in 2040.

In 2000, principal Farm representatives joined with environmental organizations to set aside differences and to cooperatively balance conservation and sustainable agriculture. A settlement agreement was reached in 2000 that set forth terms and conditions under which the parties agreed to settle litigation. The purpose of the settlement agreement was to allow development and utilization of the agreed-upon Development Area and associated water resources in a manner that preserved the ecological integrity of the adjacent Conservation Area while at the same time protecting Columbia and Snake River salmon and steelhead, the Washington ground squirrel (*Spermophilus washingtoni*), and other ecological values.

In order to address long-term conservation of the ecological values of the Covered Area and to implement the terms of the settlement agreement and creation of a Conservation Area, Farm representatives agreed to develop and implement a conservation plan that prescribes management practices for the development portion of the property while providing protection within the Conservation Area. As a result of these efforts, a draft Candidate Conservation Agreement with Assurances was developed.

Description of Proposed Action

The Farm, PGE, TNC, and ODFW have applied to the Service for 25-year Enhancement of Survival Permits pursuant to section 10(a)(1)(A) of the Act. The permits would cover habitat management, operational modifications, and conservation measures on approximately 93,000 acres in northeast Oregon (Covered Area). The Covered Area is primarily in Morrow County, with western portions in Gilliam County. The city of Boardman is approximately 6 miles to the northeast and the city of Heppner is approximately 25 miles to the south. Interstate 84 runs through the north portion of the Covered Area. The MSCCAA proposes to cover four nonlisted species facing steadily declining populations: the Washington ground squirrel; ferruginous hawk (*Buteo regalis*); loggerhead shrike (*Lanius ludovicianus gambeli*); and sage sparrow (*Amphispiza belli*) (Covered Species).

On October 25, 1999, the Service formally identified the Washington ground squirrel as a candidate for listing under the Act with a priority number of 5 (64 FR 57534). Since this initial candidate listing, the Service raised the listing priority to 2 based on additional information on the overall decline of the species throughout its range and an increased threat from agricultural conversion (66 FR 1296). Washington ground squirrels are also listed as endangered under Oregon law. The Washington ground squirrel is endemic to the Deschutes-Columbia Plateau Province south of the Columbia River and east of the John Day River. Its range was probably contiguous when the region was first settled, but now consists of three distinct sub-populations, two in Washington and one in Oregon. The MSCCAA addresses the Oregon population of the squirrel, which occurs in lower elevation (generally up to 800 feet) native grasslands and shrub-steppe, south of the Columbia River, east of the John Day River, and west of Pendleton.

The ferruginous hawk is a species of concern and is identified by the State of Oregon as a sensitive species. This species is included within this MSCCAA due to its sensitive status within the region, its strong association with the native grassland and shrub-steppe habitats in the Covered Area, and the fact that a conserved portion of the Covered Area contains the largest remaining piece of shrub-steppe habitat in the Columbia Basin.

The loggerhead shrike is an Oregon State sensitive species (vulnerable) in the Columbia Basin but has no current Federal listing status. Breeding Bird Surveys documented an annual decline of 2.7 percent nationally between 1968 and 1994. The population decline has been attributed to many factors, including pesticides, loss of nesting habitat, high winter mortality, and intensive farming practices. This species is included in this MSCCAA because the population appears to be declining across its range (thereby increasing its likelihood of becoming proposed for Federal listing) and because of recent data showing poor nesting success and high fledgling mortality on the adjacent Naval Facility.

The sage sparrow is Oregon State-listed as sensitive (critical) in the Columbia Basin but has no current Federal listing status. The sage sparrow is included in this MSCCAA due to its apparent declining range and strong positive correlation with the sagebrush habitats in the Covered Area.

Covered Species are largely dependent on private lands in the project area. Primary factors for their declining populations include loss, degradation, or fragmentation of suitable habitat within the Columbia Basin Ecosystem, largely due to the conversion of shrub-steppe to agricultural use. Conservation measures that preserve or enhance suitable habitat on private lands are critically important for the long-term survival of these species.

Pursuant to the proposed MSCCAA, the Farm (including its leased properties, affiliates, and tenants), TNC, and PGE have already begun implementing or will implement the following measures within the Covered Area:

(1) Dedicate a combined total of approximately 23,480 acres to Conservation Areas. TNC, or a comparable third-party conservation organization, will manage in perpetuity the 22,600 acres of Conservation Areas dedicated by the Farm and protected under a permanent conservation easement with the intent of maintaining and improving the imperiled native shrub-steppe and grassland habitats for the Covered Species and other associated wildlife. The PGE Conservation Area, approximately 880 acres, would also be protected from development and managed by PGE for conservation purposes for the life of the MSCCAA.

(2) Provide a 250-foot buffer around all of the Farm Conservation Areas to further restrict land use activities that otherwise could affect the outer edges of the Farm Conservation Area.

(3) Provide funds for the preservation, management, and improvement of the Conservation Areas, including intensive noxious weed control.

(4) Provide funds for conducting extensive monitoring, surveying, notification, and reporting.

(5) Provide restrictions on grazing, ground-disturbing activities, hunting and shooting to avoid or minimize harmful impacts to the Covered Species.

(6) Develop and implement coordinated fire response plans and detailed conservation management plans for the Conservation Areas.

(7) Provide for adaptive management within the Conservation Areas to address changing habitat conditions.

A draft EA has been prepared to address the impacts of issuing ESA assurances through the MSCCAA for the four covered species. The draft EA evaluates the environmental impacts that may result from implementation of the conservation measures described in the MSCCAA. The draft EA describes five alternatives to the proposed action including the ''no action'' alternative.

This notice is provided pursuant to section 10(c) of the Act, the Candidate Conservation Agreement with Assurances standard precluding the need to list, and NEPA regulations (40 CFR 1506.6). The Service will evaluate the permit applications, associated documents, and comments submitted thereon to determine whether the permit applications meet the requirements of section 10(a) of the Act and NEPA regulations. All comments received, including names and addresses, will become part of the administrative record and will be available for review pursuant to section 10(c) of the Act. If we determine that all requirements are met, we will sign the MSCCAA and issue separate permits to the Farm, PGE, TNC, and ODFW for the take of the Covered Species (should they be listed during the term of the permits), incidental to otherwise lawful activities in accordance with the terms of the MSCCAA. The final permit decisions will be made no sooner than 45 days after the date of this notice.

Dated: July 28, 2003.

Carolyn Bohan,

Acting Deputy Regional Director, Fish and Wildlife Service, Region 1, Portland, Oregon.

[FR Doc. 03–21867 Filed 8–26–03; 8:45 am]

BILLING CODE 4310–5–P

DEPARTMENT OF THE INTERIOR

Fish and Wildlife Service

Issuance of Permits

AGENCY: Fish and Wildlife Service, Interior.

ACTION: Notice of issuance of permits for marine mammals.

SUMMARY: The following permits were issued.

ADDRESSES: Documents and other information submitted with these applications are available for review, subject to the requirements of the Privacy Act and Freedom of Information Act, by any party who submits a written request for a copy of such documents to: U.S. Fish and Wildlife Service, Division of Management Authority, 4401 North Fairfax Drive, Room 700, Arlington, Virginia 22203; fax 703/358–2281.

FOR FURTHER INFORMATION CONTACT: Division of Management Authority, telephone 703/358–2104.

SUPPLEMENTARY INFORMATION: Notice is hereby given that on the dates below, as authorized by the provisions of the Endangered Species Act of 1973, *as amended* (16 U.S.C. 1531, *et seq.*), and/or the Marine Mammal Protection Act of 1972, *as amended* (16 U.S.C. 1361 *et seq.*), the Fish and Wildlife Service issued the requested permit(s) subject to certain conditions set forth therein.

Marine Mammals

Permit No.	Applicant	Receipt of application **Federal Register** notice	Permit issuance date
070536	Robert E. Speegle	68 FR 22409; April 28, 2003	August 4, 2003.
070569	Marvin J. Winter	68 FR 22409; April 28, 2003	July 15, 2003.
071569	Leonard Bernstein	68 FR 33179; June 3, 2003	August 13, 2003.
072004	Alfred E. Delgreco	68 FR 33734; June 5, 2003	August 4, 2003.
072240	Michael B. Thomas	68 FR 33735; June 5, 2003	July 17, 2003.

Dated: August 15, 2003.

Charles S. Hamilton,

Senior Permit Biologist, Branch of Permits, Division of Management Authority.

[FR Doc. 03–21901 Filed 8–26–03; 8:45 am]

BILLING CODE 4310–55–P

DEPARTMENT OF THE INTERIOR

Fish and Wildlife Service

Final Preassessment Screen for the Chino and Tyrone Mines, Grant County, New Mexico and the Morenci Mine, Graham County, Arizona

AGENCY: Fish and Wildlife Service, Interior.

ACTION: Notice of availability.

SUMMARY: The Department of the Interior, through the U.S. Fish and Wildlife Service, has conducted a preliminary screen of existing data and literature pertaining to injuries to natural resources from releases of hazardous chemicals from three large open-pit copper mines in southwestern New Mexico and southeastern Arizona (the Phelps Dodge Chino, Tyrone, and Morenci mines). Information available to the Department has resulted in a determination that there is a reasonable probability of making a successful claim for natural resource injuries. This determination, pursuant to the Comprehensive Environmental Response, Compensation, and Liability Act, (42 U.S.C. 9607, and Departmental regulations found at 43 CFR part 11), is

memorialized in the document entitled ''Final Preassessement Screen for the Chino, Tyrone, and Morenci Mine Sites, Grant County, New Mexico and Graham County, Arizona.''

DATES: Documents and other information submitted with the determinations are available for review, subject to the requirements of the Privacy Act and Freedom of Information Act, by any party who submits a written request for a copy of such documents by October 14, 2003.

ADDRESSES: Copies of the preassessment screen are available on the Internet at *http://ifw2es.fws.gov/library,* or may be requested from the Service at U.S. Fish and Wildlife Service, 2105 Osuna, NE, Albuquerque, New Mexico 87113, (505) 346–2525 or U.S. Fish and Wildlife Service, P.O. Box 1306, Room 4102, Albuquerque, New Mexico 87103, (505) 248–6648.

FOR FURTHER INFORMATION CONTACT: Karen Cathey, U.S. Fish and Wildlife Service, Ecological Services, Division of Habitat Conservation/Environmental Contaminants, P.O. Box 1306, Room 4102, Albuquerque, New Mexico 87103, (505) 248–6648.

SUPPLEMENTARY INFORMATION:

Background

Among the mines within a 500 mi^2 region of Southwestern New Mexico and Southeastern Arizona (Gila Region), the Phelps Dodge Corporation Chino, Tyrone, and Morenci open-pit copper mines are among the largest. Several ephemeral streams have been impacted by downstream releases, and portions of the Gila and San Francisco Rivers and their tributaries (bordered by the Gila and Apache National Forests) have been affected by high concentration metal pulses. Four species listed under the Endangered Species Act (spikedace, loach minnow, southwestern willow flycatcher, and Chiricahua leopard frog) frequent the affected areas, and resources under the management of the Bureau of Indian Affairs and Bureau of Land Management may have been impacted.

In September and October 2000, numerous dead birds were discovered at the Phelps Dodge Chino and Tyrone Mines in New Mexico, and the Morenci Mine in Arizona. The discovery of these dead birds (with a strong causal link to death by acid and metal poisoning), and the completion of an ecological risk assessment at an area impacted by historical copper smelter emissions (with direct evidence of injury to Department of the Interior trust resources), requires that the Department move forward with assessment of further injuries immediately. The Department has contacted the parties potentially responsible for releases of hazardous materials and invited them to participate in the assessment of injuries. Should evaluation of data indicate further extensive assessment studies are necessary, an assessment plan will be published and public comments solicited.

The preassessment screen indicates there are multiple methods that could be used in the of valuation of damages, including one method called ''contingent valuation.'' While this method is evaluated in the document, it is not likely that the Department would use the contingent valuation method because it depends heavily on subjective opinions in its analysis. More likely, once extent of injuries are determined, the Department would use one of the other methods of damage determination: Examples of such restoration project(s) would be where the responsible party conducts the implementation of the restoration project with Trustee oversight and no determination of specific monetary damages are made, or where the Trustees perform restoration projects funded by responsible parties.

Bryan Arroyo,

Acting Regional Director, Southwest Region, Albuquerque, New Mexico, Authorized Official, Department of the Interior.

[FR Doc. 03–21866 Filed 8–26–03; 8:45 am]

BILLING CODE 4510–55–P

DEPARTMENT OF THE INTERIOR

Office of Surface Mining Reclamation and Enforcement

Notice of Proposed Information Collection for 1029–0051 and 1029–0120

AGENCY: Office of Surface Mining Reclamation and Enforcement, Interior.

ACTION: Notice and request for comments.

SUMMARY: In compliance with the Paperwork Reduction Act of 1995, the Office of Surface Mining Reclamation and Enforcement (OSM) is announcing its intention to request approval to continue the collections of information under 30 CFR part 840, Permanent Program Inspection and Enforcement Procedures, and two Technical Training Program forms for nominations and payment of travel and per diem expenses. These information collection activities were previously approved by the Office of Management and Budget (OMB), and assigned clearance numbers 1029–0051 and –0120, respectively.

DATES: Comments on the proposed information collection activities must be received by October 27, 2003, to be assured of consideration.

ADDRESSES: Comments may be mailed to John A. Trelease, Office of Surface Mining Reclamation and Enforcement, 1951 Constitution Ave., NW., Room 210—SIB, Washington, DC 20240. Comments may also be submitted electronically to *jtreleas@osmre.gov.*

FOR FURTHER INFORMATION CONTACT: To request a copy of the information collection request, explanatory information and related forms, contact John A. Trelease, at (202) 208–2783 or by e-mail.

SUPPLEMENTARY INFORMATION: OMB regulations at 5 CFR 1320, which implement provisions of the Paperwork Reduction Act of 1995 (Pub. L. 104–13), require that interested members of the public and affected agencies have an opportunity to comment on information collection and recordkeeping activities [see 5 CFR 1320.8 (d)]. This notice identifies information collections that OSM will be submitting to OMB for renewed approval. These collections are contained in (1) 30 CFR part 840, Permanent Program Inspection and Enforcement Procedures (1029–0051); and (2) OSM's Technical Training Program Non-Federal Nomination Form, and Request for Payment of Travel and Per Diem Form (1029–0120). OSM will request a 3-year term of approval for each information collection activity.

Comments are invited on: (1) The need for the collection of information for the performance of the functions of the agency; (2) the accuracy of the agency's burden estimates; (3) ways to enhance the quality, utility and clarity of the information collection; and (4) ways to minimize the information collection burden on respondents, such as use of automated means of collection of the information. A summary of the public comments will accompany OSM's submission of the information collection request to OMB.

The following information is provided for each information collection: (1) Title of the information collection; (2) OMB control number; (3) summary of the information collection activity; and (4) frequency of collection, description of the respondents, estimated total annual responses, and the total annual reporting and recordkeeping burden for the collection of information.

Title: Permanent Program Inspection and Enforcement Procedures, 30 CFR part 840.

OMB Control Number: 1029–0051.

Abstract: This provision requires the regulatory authority to conduct periodic inspections of coal mining activities, and prepare and maintain inspection reports for public review. This information is necessary to meet the requirements of the Surface Mining Control and Reclamation Act of 1977 and its public participation provisions. Public review assures the public that the State is meeting the requirements for the Act and approved State regulatory program.

Bureau Form Number: None.

Frequency of Collection: Once, monthly, quarterly, and annually.

Description of Respondents: State Regulatory Authorities.

Total Annual Responses: 86,599.

Total Annual Burden Hours: 503,549.

Title: Technical Training Program Non-Federal Nomination Form and Request for Payment of Travel and Per Diem Form.

OMB Control Number: 1029–0120.

Summary: The information is used to identify and evaluate the training courses requested by students to enhance their job performance, to calculate the number of classes and instructors needed to complete OSM's technical training mission, and to estimate costs to the training program.

Bureau Form Number: OSM 105, OSM 140.

Frequency of Collection: Once.

Description of Respondents: State and Tribal regulatory and reclamation employees and industry personnel.

Total Annual Responses: 1,800.

Total Annual Burden Hours: 150 hours.

Dated: August 21, 2003.

Richard G. Bryson,

Chief, Division of Regulatory Support

[FR Doc. 03–21877 Filed 8–26–03; 8:45 am]

BILLING CODE 4310–05–M

INTERNATIONAL TRADE COMMISSION

[Investigation No. 731–TA–768 (Review)]

Fresh Atlantic Salmon From Chile

AGENCY: United States International Trade Commission.

ACTION: Termination of five-year review.

SUMMARY: The subject five-year review was initiated in June 2003 to determine whether revocation of the antidumping duty order on fresh Atlantic salmon from Chile would be likely to lead to continuation or recurrence of dumping and of material injury to a domestic industry. On July 25, 2003, Commerce published notice of its final results of a changed circumstances review, in which it decided to revoke the order on fresh Atlantic salmon from Chile, effective July 1, 2001, because ''domestic interested parties expressed no interest in the continuation of this order'' (68 FR 44043). In light of the revocation of the order, Commerce published notice that it was rescinding its five-year review on fresh Atlantic salmon from Chile on August 13, 2003 (68 FR 48339). Accordingly, pursuant to section 751(c) of the Tariff Act of 1930 (19 U.S.C. 1675(c)), the subject review is terminated.

EFFECTIVE DATE: August 13, 2003.

FOR FURTHER INFORMATION CONTACT: Mary Messer (202–205–3193), Office of Investigations, U.S. International Trade Commission, 500 E Street SW., Washington, DC 20436. Hearing-impaired individuals are advised that information on this matter can be obtained by contacting the Commission's TDD terminal on 202–205–1810. Persons with mobility impairments who will need special assistance in gaining access to the Commission should contact the Office of the Secretary at 202–205–2000. General information concerning the Commission may also be obtained by accessing its Internet server (*http://www.usitc.gov*).

Authority: This review is being terminated pursuant to section 751(c) of the Tariff Act of 1930 (19 U.S.C. 1675(c)); this notice is published pursuant to section 207.69 of the Commission's rules (19 CFR 207.69).

By order of the Commission.

Issued: August 21, 2003.

Marilyn R. Abbott,

Secretary to the Commission.

[FR Doc. 03–21875 Filed 8–26–03; 8:45 am]

BILLING CODE 7020–02–P

INTERNATIONAL TRADE COMMISSION

[Inv. No. 337–TA–435]

In the Matter of Certain Integrated Repeaters, Switches, Transceivers and Products Containing Same; Notice of Rescission of Limited Exclusion Order

AGENCY: U.S. International Trade Commission.

ACTION: Notice.

SUMMARY: Notice is hereby given that the U.S. International Trade Commission has rescinded the limited exclusion order issued in this investigation.

FOR FURTHER INFORMATION CONTACT: Andrea Casson, Esq., Office of the General Counsel, U.S. International Trade Commission, 500 E Street, SW., Washington, DC 20436, telephone (202) 205–3105. Copies of all nonconfidential documents filed in connection with this investigation are or will be available for inspection during official business hours (8:45 a.m. to 5:15 p.m.) in the Office of the Secretary, U.S. International Trade Commission, 500 E Street, SW., Washington, DC 20436, telephone (202) 205–2000. General information concerning the Commission may also be obtained by accessing its Internet server (*http://www.usitc.gov*). The public record for this investigation may be viewed on the Commission's electronic docket (EDIS) at *http://edis.usitc.gov.* Hearing-impaired persons are advised that information on this matter can be obtained by contacting the Commission's TDD terminal on (202) 205–1810.

SUPPLEMENTARY INFORMATION: On September 5, 2001, the Commission determined not to review a final initial determination finding that respondent Altima Communications, Inc. (''Altima'') violated section 337 of the Tariff Act of 1930 in the unlawful importation and sale of certain integrated repeaters covered by various claims of U.S. Patent No. 5,894,410 and U.S. Patent No. 5,742,603, owned by complainant Intel Corporation (''Intel''). On October 24, 2001, the Commission issued a limited exclusion order excluding from entry for consumption into the United States the infringing articles. The President did not disapprove the Commission's determination. *See* 19 U.S.C. 1337(j)(4).

On August 14, 2003, Intel filed with the Commission a Petition for Rescission of Exclusion Order based on a settlement agreement between Intel and Broadcom Corporation (''Broadcom''), Altima's parent. On August 19, 2003, Altima and Broadcom filed a response, stating that they join in the petition and request rescission. No party opposed the petition. The Commission found that the requirements of Commission rules 210.76(a)(1) and 210.76(a)(2), 19 CFR 210.76(a)(1) and (a)(2), were satisfied, and determined to grant the petition for rescission.

This action is taken under the authority of section 337 of the Tariff Act of 1930, 19 U.S.C. 1337(k), and section 210.76(a) of the Commission's Rules of Practice and Procedure, 19 CFR 210.76(a).

Issued: August 21, 2003.

By order of the Commission.

Marilyn R. Abbott,

Secretary.

[FR Doc. 03–21851 Filed 8–26–03; 8:45 am]

BILLING CODE 7020–02–P

DEPARTMENT OF JUSTICE

Notice of Lodging of Consent Decree Under the Comprehensive Environmental Response, Compensation, and Liability Act

Under 28 CFR 50.7, notice is hereby given that on August 14, 2003, a proposed Consent Decree in *United States* v. *City of Hastings, et al.*, Civil Action No. 8:03–cv–321, was lodged with the United States District Court for the District of Nebraska.

In this action the United States asserted claims under sections 106 and 107(a) of the Comprehensive Environmental Response, Compensation, and Liability Act (''CERCLA''), 42 U.S.C. 9606 and 9607(a), seeking an order requiring the Defendants to implement EPA's selected remedy for the South Landfill Subsite of the Hastings Groundwater Contamination Site, located in the City of Hastings, Nebraska, and requiring the Defendants to reimburse the United States for costs incurred and to be incurred in response to releases or threatened releases of hazardous substances at the Subsite. The United States asserted these claims against the City of Hastings, Dravo Corporation, Dutton-Lainson Company, and Concrete Industries, Inc. The South Landfill Subsite, a former municipal landfill, is approximately 56 acres in size and is located southeast of the central business district of Hastings, Waste oils, sludges, and other materials containing hazardous substances were disposed of at the Subsite, resulting in contamination of soils and ground water beneath and down gradient of the Subsite.

Under the terms of the proposed Consent Decree settling the claims asserted in the Complaint, the Defendants agreed to perform the remedial design and remedial action at the Subsite, pay $815,000 of EPA's past response costs, and all of the United states' future response costs. EPA's selected remedy for the Subsite consists of capping the landfill with an evapotranspiration cover, monitored natural attenuation of contaminated ground water emanating from beneath the landfill, and institutional controls. In return for the commitments by the Settling Defendants, the United States grants the Settling Defendants a covenant not to sue under Sections 106 and 107(a) of CERCLA, 42 U.S.C. 9606 and 9607(a), relating to the south Landfill Subsite.

The Department of Justice will receive for a period of thirty (30) days from the date of this publication comments relating to the Consent Decree. Comments should be addressed to the Assistant Attorney General, Environment and Natural Resources Division, P.O. Box 7611, U.S. Department of Justice, Washington, DC 20044–7611, and should refer to *United States* v. *City of Hastings, et al.*, D.J. Ref. No. 90–11–2–1112/4.

The Consent Decree may be examined at the Office of the United States Attorney, 1620 Dodge Street, Suite 1400, Omaha, NE 68102–1506, and at U.S. EPA Region VII, 901 North Fifth Street, Kansas City, Kansas 66025. During the public comment period, the Consent Decree may also be examined on the following Department of Justice Web site, *http://www.usdoj.gov/enrd/open.html.* A copy of the Consent Decree may also be obtained by mail from the consent Decree Library, P.O. Box 7611, U.S. Department of Justice, Washington, DC 20044–7611 or by faxing or e-mailing a request to Tonia Fleetwood (*tonia.fleetwood@usdoj.gov*), fax no. (202) 514–0097, phone confirmation number (202) 514–1547. In requesting a copy from the Consent Decree Library, Please enclose a check in the amount of $41.25 (25 cents per page reproduction cost) payable to the U.S. Treasury. If requesting a copy of the Consent Decree exclusive of Appendices, please enclose a check in the amount of $12.00 (25 cents per page reproduction cost) payable to the U.S. Treasury.

Catherine R. McCabe,

Deputy Section Chief, Environmental Enforcement Section, Environment and Natural Resources Division.

[FR Doc. 03–21924 Filed 8–26–03; 8:45 am]

BILLING CODE 4410–15–M

DEPARTMENT OF JUSTICE

Notice of Lodging of Consent Decree Under the Clean Water Act

In accordance with Departmental Policy, 28 U.S.C. 50.7, notice is hereby given that on August 13, 2003, a proposed Consent Decree in *United States, et al.* v. *Hoosac Water Quality District, et al.,* Civil Action No. 03–30197, was lodged with the United States District Court for the District of Massachusetts.

In this section, the United States sought injunctive relief and civil penalties against the Hoosac Water Quality District (''the District''), the City of North Adams, and the Town of Williamstown, (all located in Massachusetts), with respect to violations of the limitations imposed under a National Pollutant Discharge Elimination System (''NPDES'') permit issued to the District's Waste Water Treatment Plant pursuant to section 301(a) of the Clean Water Act (''CWA''), 33 U.S.C. 1311(a). Under the terms of the proposed settlement, the Settling Defendants will pay a civil penalty of $100,000 and Williamstown will undertake a Supplemental Environmental Project with a cost to Williamstown of at least $168,400. In addition, the Settling Defendants will undertake measures to reduce infiltration and inflow into the District and otherwise bring the Plant into compliance with the CWA.

The Department of Justice will receive for a period of thirty (30) days from the date of this publication comments relating to the Consent Decree. Comments should be addressed to the Assistant Attorney General, Environment and Natural Resources Division, P.O. Box 7611, U.S. Department of Justice, Washington, DC 20044–7611, and should refer to *United States* v. *Hoosac Water Quality District,* D.J. Ref. 90–5–1–1–07289.

The Consent Decree may be examined at the Office of the United States Attorney, Western District of Massachusetts, 1550 Main Street, Springfield, Massachusetts, 0113, and at U.S. EPA Region I, One Congress Street, Boston, MA, 02114. During the public comment period, the Consent Decree, may also be examined on the following Department of Justice Web site, *http://www.usdoj.gov/enrd/open.html.* A copy of the Consent Decree may also be obtained by mail from the Consent Decree Library, P.O. Box 7611, U.S. Department of Justice, Washington, DC 20044–7611 or by faxing or e-mailing a request to Tonia Fleetwood (*tonia.fleetwood@usdoj.gov*), fax no. (202) 514–0097, phone confirmation number (202) 514–1547. In requesting a copy from the Consent Decree Library, please enclose a check in the amount of $14.25 (25 cents per page reproduction cost-no including the attached exhibits) payable to the U.S. Treasury.

Ronald Gluck,

Assistant Chief, Environmental Enforcement Section, Environment and Natural Resources Division.

[FR Doc. 03–21921 Filed 8–26–03; 8:45 am]

BILLING CODE 4410–15–M

DEPARTMENT OF JUSTICE

Second Amended Clean Water Act Consent Decree With Icicle Seafoods, Inc.

AGENCY: Department of Justice.

ACTION: Notice of availability for public comment.

SUMMARY: Notice is hereby given that on August 18, 2003, a Second Amended Consent Decree in *United States* v. *Icicle Seafoods, Inc.,* Docket No. A03–0142 CV (JWS), was lodged with the United States District Court for the District of Alaska. In this action brought pursuant to section 309 of the Clean Water Act, as amended, 33 U.S.C. 1319, the United States has requested the imposition of civil penalties and injunctive relief on Icicle Seafoods, Inc. (Icicle). This action arose out of Icicle's operation of its Seward Fisheries Facility in Seward, Alaska. The United States has alleged that Icicle discharged seafood processing waste from that facility to waters of the United States without a permit on various days in 2000 and 2001, and that the company failed to meet several of the discharge and reporting requirements of its authorization to discharge under the general National Pollutant Discharge Elimination System permit for seafood processors in Alaska (General Permit) on numerous days between January of 1998 and October of 2001, all in violation of section 301 of the Clean Water Act, 33 U.S.C. 1311.

Authority: 28 CFR 50.7.

Like the Consent Decree that was lodged with the court on June 26, 2003, and the Amended Consent Decree that was lodged with the court on July 18, 2003, the Second Amended Consent Decree requires Icicle to pay an $85,000 civil penalty and perform several measures of injunctive relief at the Seward Fisheries Facility. The first element of injunctive relief, requiring that Icicle render salmon heads and waste salmon carcasses into fish meal during the 2003 processing season and provide related reporting to the Environmental Protection Agency (EPA), allowed Icicle to barge that salmon processing waste to an EPA-approved at-sea discharge location when the fish meal plant was inoperative and Icicle could not freeze that waste or dispose of it by means other than marine discharge. The Amended Consent Decree allowed an additional exception for at-sea discharges of such waste during the period July 11–July 31, 2003. This exception was available if the fish meal plant is operating at full capacity and Icicle could not freeze or dispose of salmon heads and waste salmon carcasses by means other than marine discharge. The Second Amended Consent Decree changes the period during which this exception is available to August 15 through September 20, 2003.

The other injunctive relief measures Icicle is to implement remain the same. They concern the reduction of foam generated by the transfer of fresh seafood from catcher vessels to the Seward Fisheries Facility for processing; means to prevent the introduction of fish hooks into the grinders used to chop seafood processing waste into ½″ pieces that can be discharged under the General Permit; the monitoring of the underwater waste pile created by discharges from the Seward Fisheries Facility prior to 2002; and improvement of internal operating procedures.

DATES: The Department of Justice will receive for a period of thirty (30) days from the date of this publication comments relating to the Second Amended Consent Decree.

ADDRESSES: Comments should be addressed to the Assistant Attorney General, Environment and Natural Resources Division, United States Department of Justice and sent to 801 B Street, Suite 504, Anchorage, Alaska 99501–3657. Comments should refer to *United States* v. *Icicle Seafoods, Inc.,* D.J. Ref. #90–5–1–1–07395. During the public comment period, the Second Amended Consent Decree may be examined during business hours at the same address by contacting Lorraine Carter (907–271–5452) or on the following Department of Justice Web site, *http://www.usdoj.gov/enrd/open.html.* The Second Amended Consent Decree may also be examined at the Office of the Regional Counsel, EPA Region 10, 1200 Sixth Avenue, Seattle, Washington 98101, by contacting Meg Silver (206–553–1476). A copy of the Second Amended Consent Decree may be obtained by contacting Lorraine Carter in writing at the address above or via electronic mail (*lorraine.carter@usdoj.gov*). In requesting a copy by mail, please enclose a check in the amount of $5.00 (25 cents per page reproduction cost) payable to the U.S Treasury.

Catherine R. McCabe,

Deputy Section Chief, Environmental Enforcement Section, Environment and Natural Resources Division.

[FR Doc. 03–21923 Filed 8–26–03; 8:45 am]

BILLING CODE 4410–15–M

DEPARTMENT OF JUSTICE

Notice of Lodging Proposed Consent Decree

In accordance with Departmental Policy, 28 CFR 50.7, notice is hereby given that a proposed consent decree in *United States* v. *Stephen Jacobs and Doug Steve,* case No. 02 C 8998, was lodged with the United States District Court for the Northern District of Illinois on August 19, 2003. This proposed Consent Decree concerns a complaint filed by the United States against Stephen Jacobs and Doug Steve, pursuant to section 301(a) of the Clean Water Act (''CWA''), 33 U.S.C. 1311(a) and section 10 of the Rivers and Harbors Appropriation Act of 1899, 33 U.S.C. 403 (''RHA''), to obtain injunctive relief from and impose civil penalties against the Defendants for filling wetlands on their property without a permit and for installing bank stabilization and boat docks in the Fox River without a permit.

The proposed Consent Decree prohibits mowing, cutting, clearing, cultivating, dredging, excavating, farming, filling, dewatering, draining or otherwise disturbing in any manner whatsoever the wetland impact area, and requires removal of all fill material from the wetland impact area, removal of a portion of the bank stabilization, restoration of the filled wetland areas, and requires payment of a civil penalty.

The Department of Justice will accept written comments relating to this proposed Consent Decree for thirty (30) days from the date of publication of this notice. Please address comments to Kurt Lindland, Assistant United States Attorney, United States Attorney's Office, 5th Floor, 219 S. Dearborn Street, Chicago, Illinois 60604 and refer to *United States* v. *Stephen Jacobs and Doug Steve,* including the USAO #2002V01900.

The proposed Consent Decree may be examined at the Clerk's Office, United States District Court for the Northern District of Illinois, 219 S. Dearborn Street, Chicago, Illinois. In addition, the proposed Consent Decree may be viewed on the World Wide Web at *http://www.usdoj.gov/enrd/open.html.*

Kurt N. Lindland,

Assistant United States Attorney.

[FR Doc. 03–21920 Filed 8–26–03; 8:45 am]

BILLING CODE 4410–15–M

DEPARTMENT OF JUSTICE

Notice of Lodging of Consent Decree in In re Kaiser Aluminum Corporation Under the Comprehensive Environmental Response Compensation and Liability Act (CERCLA)

Notice is hereby given that on August 22, 2003, a proposed Consent Decree was lodged with the United States Bankruptcy Court for the District of Delaware in *In re Kaiser Aluminum Corporation,* No. 02–10429 (JKF) (Bankr. D. Del.). The Consent Decree among the United States on behalf of U.S. EPA, Department of Interior, National Oceanic and Atmospheric Administration of the Department of Commerce, the States of Rhode Island, and Washington, the State of California Department of Toxic Substances Control and the State of California Department of Fish and Game, the Puyallap Tribe of Indians, the Debtor Kaiser Aluminum Corporation and certain of its Debtor affiliates, including Kaiser Aluminum & Chemical Corporation, resolves CERCLA claims against the Debtors for the following 66 hazardous waste sites, denominated as ''Liquidated Sites'' under the Consent Decree: Aberdeen Pesticide Dumps Superfund Site in Aberdeen, NC; American Chemical Services Site in Griffith, IN; Aqua Tech Environmental Inc. Site in Greer, SC; ARRCOM Corporation Site in Kootenai County, ID; Bay Area Drum Site in San Francisco, CA; Bay Drums (a.k.a. Peak Oil Co.) Site in Brandon, FL; Bayou Sorrel Site in Bayou Sorrell, LA; Breslube Penn Superfund Site in Coroapolis, PA; Cannons Engineering Corporation Site in Bridgewater, MA, Plymouth, MA and Londenderry, NH and Gilson Road, a.k.a. Sylvester's in Nashua, NH; Casmalia Disposal Site in Santa Barbara County, CA; Center for Technology (a.k.a. CFT or Pleasanton Center for Technology) Site in Pleasanton, CA (with respect to the State of California only); Chemical Control Superfund Site in Elizabeth, NJ; Chemical Handling Corporation Site in Broomfield, CO; Coastal Radiation Services Site in St. Gabriel, LA; Combustion Inc. Site in Livingston, LA; Commencement Bay (Hylebos Waterway) Site in Tacoma, WA; Commercial Oil Services Site in Toledo, OH; Custom Distribution Services Site in Perth Amboy, NJ; Diamond State Salvage Yard in Wilmington, DE; Doepke-Holliday Site in Johnson County, KS; Douglassville Disposal/Berks Reclamation Site in Douglassville, PA; Dubose Oil Products Superfund Site in Cantonment, FL; Dutchtown Refinery Site in Dutchtown, LA; Eastern Diversified Metals Superfund Site in Hometown, PA; Ekotek (a.k.a. Petrochem Recycling) Site in Salt Lake City, UT; Ellis Road Site in Jacksonville, FL; Envirotek II Site in Tonawanda, NY; Ettlinger's Pit in Duval County, FL; Four County Landfill Site in De Long, IN; French Limited Site in Crosby, TX; Geigy Superfund Site in Aberdeen, NC; General Refining Site in Garden City, GA: Gibson Environmental, Inc. Site in Bakersfield, CA; Great Lakes Container Site in St. Louis, MO; Higgins Disposal Site in Somerset County, NJ; Hillsdale Drums Site in Hillsdale and Amite, LA; Huth Oil Services Site in Cleveland, OH; Laskin Poplar Site in Ashtabula County, OH; Liquid Disposal Site in Utica, MI; Liquid Dynamics Site in Chicago, IL; Lorentz Barrel & Drum Site in San Jose, CA; Marzone Site in Tipton, GA; Metamora Landfill Site in Lapeer County, MI; Moyer's Landfill Site in Collegeville, PA; Operating Industries, Inc. Corporation Site in Monterey Park, CA; Pickettville Road Landfill Site in Jacksonville, FL; PRC Patterson Site in Patterson, CA; Pristine, Inc. Site in Reading, OH; Quicksilver Products, Inc. Site in Brisbane, CA (with respect to the State of California only); Richmond Railyard Site in Richmond, CA; Richmond Shipyard No. 2 (a.k.a. Marina Bay Development) Site in Richmond, CA; Rouse Steel Drums Site in Jacksonville, FL; Sadler Drum Superfund Site in Mulberry, FL; Sand Springs Petrochemical Complex Site in Sand Springs, OK; Sea Cliff Marina Site in Richmond, CA (with respect to the State of California only); Spokane Junkyard in Spokane, WA; Stickney Ave. Landfill & Tyler St. Dump Site in Toledo, OH; Tacoma Reduction Facility Site in Tacoma, WA; Tex-Tin Site in Texas City, TX; Tremont City Landfill Site in Clark County, OH; Tri-County and Elgin Landfills Site in South Elgin, IL; Waste, Inc. Landfill Site in Michigan City, IN; West County Landfill Site in Contra Costa County, CA; West Virginia Ordnance Works (a.k.a. Point Pleasant Landfill) Site in Mason County, WV; XTRON Site in Blanding, UT; and Yellow Water Road Superfund Site in Baldwin, FL.

Under the Consent Decree, in addition to amounts previously paid, the Debtors have agreed to allowed claims in the total amount of $24,486,021. The Consent Decree also contains provisions pertaining to the treatment of four other categories of sites: Debtor-Owned Sites, Discharged Sites, Additional Sites, and Reserved Sites.

The Department of Justice will receive for a period of thirty (30) days from the date of this publication comments relating to the Consent Decree. Comments should be addressed to the Assistant Attorney General, Environment and Natural Resources Division, P.O. Box 7611, U.S. Department of Justice, Washington, DC 20044–7611, and should refer to *In re Kaiser Aluminum Corp.*, D.J. Ref. 90–11–3–00769/1. Commenters may request an opportunity for a public meeting in the affected area, in accordance with Section 7003(d) of RCRA, 42 U.S.C. 6973(d).

The Consent Decree may be examined at the Office of the United States Attorney for the District of Delaware, 1201 Market Street, Suite 1100, Wilmington, DE, and at the United States Environmental Protection Agency, 401 M Street, SW., Washington, DC 20460. During the public comment period, the Consent Decree may also be examined on the following Department of Justice Web site, *http://www.usdoj.gov/enrd/open.html.* A copy of the Consent Decree may also be obtained by mail from the Consent Decree Library, P.O. Box 7611, U.S. Department of Justice, Washington, DC. 20044–7611 or by faxing or e-mailing a request to Tonia Fleetwood (*tonia.fleetwood@usdoj.gov*), fax no. (202) 514–0097, phone confirmation number (202) 514–1547. In requesting a copy from the Consent Decree Library, please enclose a check in the amount of $11.75 (25 cents per page reproduction cost) payable to the U.S. Treasury.

Bruce S. Gelber,

Section Chief, Environmental Enforcement Section, Environment and Natural Resources Division.

[FR Doc. 03–21919 Filed 8–26–03; 8:45 am]

BILLING CODE 4410–15–M

DEPARTMENT OF JUSTICE

Notice of Lodging of Material Modification of Consent Decree Under the Residential Lead-Based Paint Hazard Reduction Act of 1992

Notice is hereby given that on August 12, 2003, a proposed Material Modification of Consent Decree in *United States* v. *Wolin-Levin, Inc.,* Civil No. 01 C 7580, was lodged with the United States District Court for the Northern District of Illinois.

A Consent Decree was entered in this section on March 12, 2002, between defendant Wolin-Levin, Inc., a real estate management company doing business in the City of Chicago, the United States, and plaintiff-intervenors the State of Illinois, Cook County and the City of Chicago.

The Material Modification of Consent Decree changes the performances standard for the work that will be done pursuant to the Consent Decree. In addition, the Material Modification of Consent Decree provides that defendant Wolin-Levin, Inc. establish a $300,000 letter of credit to guarantee certain of its obligation under the modified Consent Decree.

The Department of Justice will receive for a period of thirty (30) days from the date of this publication, comments relating to the Material Modification of Consent Decree. Comments should be addressed to the Assistant Attorney General, Environmental and Natural Resources Division, P.O. Box 7611, Department of Justice, Washington, DC 20044–7611, and should refer to *United States* v. *Wolin-Levin, Inc.,* D.J. Ref. 90–11–2–06829/1.

The Consent Decree may be examined at the Office of the United States Attorney, Jonathan Haile, Assistant U.S. Attorney, 5th Floor, 219 S. Dearborn St., Chicago, Illinois 60604. During the public comment period, the Consent Decree may also be examined on the following Department of Justice Website, *http://www.usdoj.gov/enrd/open.html.* A copy of the Consent Decree may also be obtained by mail from Consent Decree Library, P.O. Box 76121, U.S. Department of Justice, Washington, DC 20044–7611, or by faxing or e-mailing a request to Tonia Fleetwood (*tonia.fleetwood@usdoj.gov*), fax no. (202) 616–6584, phone confirmation number (202) 514–1547. In requesting a copy, please enclose a check in the amount of $12.00 (48 pages at 48 cents per page reproduction cost) payable to the U.S. Treasury.

Ellen Mahan,

Assistant Section Chief, Environmental Enforcement Section, Environmental and Natural Resources Division.

[FR Doc. 03–21922 Filed 8–26–03; 8:45 am]

BILLING CODE 4410–15–M

NUCLEAR REGULATORY COMMISSION

[Docket No. 70–143]

Nuclear Fuel Services, Inc.; Correction of Amendment 39 Authorizing Operations in the Uranyl Nitrate Building

ACTION: Notice of availability; Corrected Amendment 39 to Materials License SNM–124.

FOR FURTHER INFORMATION CONTACT: Mary Adams, Fuel Cycle and Safety Branch, Office of Nuclear Materials, Safety and Safeguards, 11554 Rockville Pike, Rockville, MD 20852; telephone (301) 415–7249; or by e-mail at *mta@nrc.gov.*

SUPPLEMENTARY INFORMATION: Amendment 39 to Materials License SNM–124 was issued on July 7, 2003. Safety Condition S–1 in Amendment 39 failed to reference the supplement to the Nuclear Fuel Services (NFS) license application dated April 16, 2003. NRC staff used the commitments in this supplement as the basis for approving management measures for items relied on for safety at the Uranyl Nitrate Building. Safety Condition S–1 has been corrected to add the date of April 16, 2003.

The corrected Amendment 39 is available electronically for public inspection and copying for a fee in the NRC Public Document Room, One White Flint North Building, 11555 Rockville, MD 20852, or from the Publicly Available Records (PARS) component of NRC's Agency-wide Documents Access and Management System (ADAMS) under accession number ML031890762. ADAMS is accessible from the NRC Web site at *http://www.nrc.gov/reading-rm/adams.html* (the Public Electronic Reading Room). If you do not have access to ADAMS, or if there are problems accessing the documents located in ADAMS, contact the NRC Public Document Room Reference staff at 1(800) 397–4209 or by e-mail at *pdr@nrc.gov.*

Dated at Rockville, Maryland, this 13th day of August, 2003.

For the U.S. Nuclear Regulatory Commission.

Mary T. Adams,

Project Manager, Fuel Cycle Facilities Branch, Division of Fuel Cycle Safety and Safeguards, Office of Nuclear Material Safety and Safeguards.

[FR Doc. 03–21881 Filed 8–26–03; 8:45 am]

BILLING CODE 7590–01–P

NUCLEAR REGULATORY COMMISSION

[Docket Nos. 50–272 and 50–311]

PSEG Nuclear, LLC, Salem Nuclear Generating Station, Unit Nos. 1 and 2; Environmental Assessment and Finding of No Significant Impact

The U.S. Nuclear Regulatory Commission (NRC) is considering the issuance of amendments to Facility Operating License Nos. DPR–70 and DPR–75, issued to PSEG Nuclear, LLC (the licensee), for operation of the Salem Nuclear Generating Station (Salem), Unit Nos. 1 and 2, located in Salem County, New Jersey. Therefore, as required by Title 10 of the Code of Federal Regulations (10 CFR) Section 51.21, the NRC is issuing this environmental assessment and finding of no significant impact.

Environmental Assessment

Identification of the Proposed Action: The proposed action would allow the licensee to make an editorial change to the Salem Technical Specifications (TSs) by revising the description of the P–7 permissive interlock defined in TS Table 3.3–1, ''Reactor Trip System Instrumentation,'' in accordance with the licensee's application dated April 10, 2003.

The Need for the Proposed Action: The proposed action would revise the description of the P–7 permissive interlock defined in TS Table 3.3–1 due to changes in the design of the high pressure turbine. As part of this design change, the pressure taps for transmitters PT505 and PT506 will be relocated. Consequently, the description for the ''Turbine impulse chamber pressure'' will be changed to ''Turbine steam line inlet pressure.'' The proposed action is considered an editorial change.

Environmental Impacts of the Proposed Action: The NRC has completed its evaluation of the proposed action and concludes, as set forth below, that there are no significant environmental impacts associated with the administrative and editorial changes to the Salem TSs.

The proposed action will not significantly increase the probability or consequences of accidents, no changes are being made in the types of effluents that may be released offsite, and there is no significant increase in occupational or public radiation exposure. Therefore, there are no significant radiological environmental impacts associated with the proposed action.

With regard to potential nonradiological impacts, the proposed action does not have a potential to affect any historic sites. It does not affect nonradiological plant effluents and has no other environmental impact. Therefore, there are no significant nonradiological environmental impacts associated with the proposed action.

Accordingly, the NRC concludes that there are no significant environmental impacts associated with the proposed action.

Environmental Impacts of the Alternatives to the Proposed Action: As an alternative to the proposed action, the staff considered denial of the

proposed action (*i.e.*, the ''no-action'' alternative). Denial of the application would result in no change in current environmental impacts. The environmental impacts of the proposed action and the alternative action are similar.

Alternative Use of Resources: The action does not involve the use of any different resource than those previously considered in the Final Environmental Statement related to operation of Salem Nuclear Generating Station, Unit Nos. 1 and 2, dated April 1973.

Agencies and Persons Consulted: On June 10, 2003, the staff consulted with the New Jersey State official, Mr. Rich Pinney of the New Jersey Department of Environmental Protection, regarding the environmental impact of the proposed action. The State official had no comments.

Finding of No Significant Impact

On the basis of the environmental assessment, the NRC concludes that the proposed action will not have a significant effect on the quality of the human environment. Accordingly, the NRC has determined not to prepare an environmental impact statement for the proposed action.

For further details with respect to the proposed action, see the licensee's letter dated April 10, 2003. Documents may be examined, and/or copied for a fee, at the NRC's Public Document Room (PDR), located at One White Flint North, Public File Area O1 F21, 11555 Rockville Pike (first floor), Rockville, Maryland. Publicly available records will be accessible electronically from the Agencywide Documents Access and Management System (ADAMS) Public Electronic Reading Room on the Internet at the NRC Web site, *http://www.nrc.gov/reading-rm/adams.html.* Persons who do not have access to ADAMS, or who encounter problems in accessing the documents located in ADAMS, should contact the NRC's PDR reference staff by telephone at 1–800–397–4209 or 301–415–4737, or by e-mail to *pdr@nrc.gov.*

Dated at Rockville, Maryland, this 30th day of June, 2003.

For the Nuclear Regulatory Commission.

Richard B. Ennis,

Acting Chief, Section 2, Project Directorate I, Division of Licensing Project Management, Office of Nuclear Reactor Regulation.

[FR Doc. 03–21882 Filed 8–26–03; 8:45 am]

BILLING CODE 7590–01–P

NUCLEAR REGULATORY COMMISSION

[Docket No. 040–08976]

Notice of Finding of No Significant Impact and Availability of Environmental Assessment for License Amendment of Source Material License No. SMB–1527, Viacom, Incorporated, Bloomfield, New Jersey

I. Introduction

The U.S. Nuclear Regulatory Commission (NRC) is considering the issuance of a license amendment to Viacom, Incorporated (Viacom) for Source Material License No. SMB–1527, to authorize release of the former lamp manufacturing plant located at One Westinghouse Plaza, Bloomfield, New Jersey for unrestricted use and has prepared an Environmental Assessment (EA) in support of this action in accordance with the requirements of 10 CFR part 51. Based on the EA, the NRC has concluded that a Finding of No Significant Impact (FONSI) is appropriate.

II. Environmental Assessment

The purpose of the proposed action is to allow for the release of the licensee's Bloomfield, New Jersey facility for unrestricted use. Viacom, Incorporated in Bloomfield, New Jersey (formerly Westinghouse Electric Corporation and CBS Corporation) was authorized by NRC since February 3, 1989, to possess radioactive materials for decommissioning purposes at the site. On August 21, 2002, Viacom requested that NRC release the Bloomfield, New Jersey facility for unrestricted use. Viacom has conducted surveys of the facility and determined that the facility meets the license termination criteria in Subpart E of 10 CFR part 20.

III. Finding of No Significant Impact

The NRC staff has evaluated Viacom's request and the results of the surveys and has concluded that the completed action complies with the criteria in subpart E of 10 CFR part 20. The staff has prepared the EA (summarized above) in support of the proposed license amendment to terminate the license and release the facility for unrestricted use. On the basis of the EA, NRC has concluded that the environmental impacts from the proposed action are not expected to be significant and has determined not to prepare an environmental impact statement for the proposed action.

IV. Further Information

The EA and the documents related to this proposed action, including the application for the license amendment and supporting documentation, are available for inspection at NRC's Public Electronic Reading Room at *http://www.nrc.gov/reading-rm/adams.html* (ADAMS Accession No. ML032250208. These documents are also available for inspection and copying for a fee at the Region I Office, 475 Allendale Road, King of Prussia, Pennsylvania, 19406. Any questions with respect to this action should be referred to Mark C. Roberts, Decommissioning and Laboratory Branch, Division of Nuclear Materials Safety, Region I, 475 Allendale Road, King of Prussia, Pennsylvania, 19406, telephone (610) 337–5094, fax (610) 337–5269.

Dated at King of Prussia, Pennsylvania this 13th day of August, 2003.

For The Nuclear Regulatory Commission.

Francis Costello,

Deputy Division Director, Division of Nuclear Materials Safety, Region I.

[FR Doc. 03–21883 Filed 8–26–03; 8:45 am]

BILLING CODE 7590–01–P

SECURITIES AND EXCHANGE COMMISSION

[Release Number IC–26166; 812–12997]

Fidelity Commonwealth Trust, et al.; Notice of Application

August 22, 2003.

AGENCY: Securities and Exchange Commission (''Commission'').

ACTION: Notice of an application for an order under section 6(c) of the Investment Company Act of 1940 (the ''Act'') for an exemption from sections 2(a)(32), 5(a)(1), 22(d) and 24(d) of the Act and rule 22c–1 under the Act, and under sections 6(c) and 17(b) of the Act for an exemption from sections 17(a)(1) and (a)(2) of the Act.

Summary of Application: Applicants request an order that would permit (a) series of an open-end management investment company, whose portfolios will consist of the component securities of certain equity securities indexes, to issue shares of limited redeemability; (b) secondary market transactions in the shares of the series to occur at negotiated prices on The Nasdaq Stock Market (''Nasdaq'') or a national securities exchange (each, a ''Listing Market''); (c) dealers to sell shares of the series to purchasers in the secondary market unaccompanied by a prospectus, when prospectus delivery is not required by the Securities Act of 1933

(the ''Securities Act''); and (d) affiliated persons of the series to deposit securities into, and receive securities from, the series in connection with the purchase and redemption of aggregations of the series' shares.

Applicants: Fidelity Commonwealth Trust (''Trust''), Fidelity Distributors Corporation (''Distributor''), and Fidelity Management & Research Company (''Advisor'').

Filing Dates: The application was filed on August 4, 2003, and amended on August 22, 2003.

Hearing or Notification of Hearing: An order granting the requested relief will be issued unless the Commission orders a hearing. Interested persons may request a hearing by writing to the Commission's Secretary and serving applicants with a copy of the request, personally or by mail. Hearing requests should be received by the Commission by 5:30 p.m. on September 11, 2003, and should be accompanied by proof of service on applicants, in the form of an affidavit or, for lawyers, a certificate of service. Hearing requests should state the nature of the writer's interest, the reason for the request, and the issues contested. Persons who wish to be notified of a hearing may request notification by writing to the Commission's Secretary.

ADDRESSES: Secretary, Securities and Exchange Commission, 450 Fifth Street, NW., Washington, DC 20549–0609. Applicants, 82 Devonshire Street, Boston, MA 02109.

FOR FURTHER INFORMATION CONTACT: Keith A. Gregory, Senior Counsel, at (202) 942–0611, or Michael W. Mundt, Senior Special Counsel, at (202) 942–0564 (Division of Investment Management, Office of Investment Company Regulation).

SUPPLEMENTARY INFORMATION: The following is a summary of the application. The complete application may be obtained for a fee at the Commission's Public Reference Branch, 450 Fifth Street, NW., Washington, DC 20549–0102 (tel. 202–942–8090).

Applicants' Representations

1. The Trust is an open-end management investment company registered under the Act and organized as a Massachusetts business trust. The Trust intends to create a new, non-diversified series that will operate pursuant to the terms and conditions of the application (the ''Initial Fund'' and together with the ''Future Funds,'' as defined below, the ''Funds''). The Advisor is registered as an investment adviser under the Investment Advisers Act of 1940 (''Advisers Act'') and will serve as the investment adviser to the Funds. The Advisor may, in the future, enter into subadvisory agreements with additional investment advisers to act as subadvisers with respect to particular Funds. Any subadviser will be registered under the Advisers Act. The Distributor is registered as a broker-dealer under the Securities Exchange Act of 1934 (''Exchange Act'') and will be the principal underwriter and distributor of the shares of the Funds (''Shares'').

2. Each Fund will invest in a portfolio of equity securities generally consisting of the component securities of a specified equity securities index (an ''Underlying Index'').[1] The Initial Fund will be based on the NASDAQ Composite Index. Applicants request that the order also apply to any additional series of the Trust, or any series of any other existing or future investment company registered under the Act, that will (a) be based on an Underlying Index and operate pursuant to the terms and conditions of the application and (b) be advised by the Advisor or an entity controlled by or under common control with the Advisor (each, a ''Future Fund''). No entity that creates, compiles, sponsors or maintains an Underlying Index is or will be an affiliated person, as defined in section 2(a)(3) of the Act, or an affiliated person of an affiliated person, of the Trust, the Advisor, a subadviser or promoter of a Fund, or the Distributor.

3. The investment objective of each Fund will be to provide investment results that closely correspond to the price and yield performance of its Underlying Index. Intra-day values of each Underlying Index will be disseminated every 15 seconds throughout regular trading hours on the Listing Market. A Fund will utilize either a replication strategy or a representative sampling strategy to track its Underlying Index. A Fund using a replication strategy generally will invest in substantially all of the component securities of its Underlying Index in the same approximate proportions as in the Underlying Index. When a component security is illiquid or when there are practical difficulties or substantial costs involved in holding every security in an Underlying Index, a Fund may use a representative sampling strategy where it holds a representative sample of the component securities of the Underlying Index and will invest in some but not all of the component securities of its Underlying Index.[2] Applicants anticipate that a Fund using the representative sampling technique will not track its Underlying Index with the same degree of accuracy as an investment vehicle that invests in every component security of the Underlying Index with the same weighting as the Underlying Index. Applicants anticipate that the expected tracking error of a Fund using the representative sampling technique will not exceed 5%, net of fees or expenses.

4. Shares will be issued in aggregations of at least 50,000 or more (''Creation Units''). The price of a Creation Unit will range from $5,000,000 to $7,000,000. All orders to purchase Creation Units must be placed with the Distributor by or through a Depository Trust Company (''DTC'') participant that has executed a participation agreement with the Distributor. Creation Units generally will be issued in exchange for an in-kind deposit of securities and cash. A Fund also may sell Creation Units on a ''cash only'' basis in limited circumstances. A person purchasing a Creation Unit from a Fund must make a ''Creation Deposit'' consisting of: (a) securities selected by the Advisor (''Deposit Securities''), and (b) a cash payment equal to the difference between the market value of the Deposit Securities and the net asset value (''NAV'') of a Creation Unit (''Cash Amount'').[3] An investor purchasing or

[1] As a general matter, at least 90% of each Fund's total assets (exclusive of collateral held from securities lending will be invested in the component securities of its Underlying Index. Each Fund may also invest up to 10% of its total assets in stocks that are not included in the Underlying Index, futures contracts, options on futures contracts, options and swaps, and cash and cash equivalents. Under certain unusual circumstances, such as to manage changes in its Underlying Index, a Fund may have between 80% and 90% of its total assets invested in the component securities of its Underlying Index for a short period of time.

[2] Securities selected for inclusion in a Fund by the Advisor will have aggregate investment characteristics (based on market capitalization and industry weightings), fundamental characterictics (such as return variability, earnings valuation and yield) and liquidity measures similar to those of the Underlying Index taken in its entirety.

[3] On each day that the Listing Market is open for business (''Business Day''), the Advisor or subadviser will make available through the National Securities Clearing Corporation (''NSCC''), prior to the opening of trading on the Listing Market, the list of the names and the required number of shares of each Deposit Security to be included in the Creation Deposit for each Fund as well as information regarding the Cash Amount. That Creation Deposit will apply to all purchases of Creation Units until a new Creation Deposit composition is announced. A purchasing investor may be permitted or required to substitute an amount of cash or a different security for a Deposit Security in certain circumstances. The Listing Market will disseminate every 15 seconds throughout the regular trading hours of the Listing Market, an amount representing on a per Share basis the sum of the current value of the deposit Securities and the estimated Cash Amount.

redeeming Creation Units from a Fund will be charged a fee (''Transaction Fee'') to prevent the dilution of the interests of the remaining shareholders resulting from costs incurred by the Fund in connection with the purchase and redemption of the Creation Units.[4] Each Fund will provide complete disclosure about the Transaction Fee in its prospectus, including the maximum amount of the Transaction Fee, and the method of calculating the Transaction Fee will be disclosed in the Trust's statement of additional information (''SAI'').

5. Orders to purchase Creation Units must be placed with the Distributor who will be responsible for transmitting the orders to the relevant Fund. The Distributor will maintain a record of Creation Unit purchases and send out confirmations to purchasers. The Distributor will also furnish a copy of the Fund's prospectus to those placing purchase orders.

6. Persons purchasing Creation Units from a Fund may hold the Shares or sell some or all of them in the secondary market. Shares of the Funds will be listed on a Listing Market, which will either be Nasdaq or a national securities exchange as defined in section 2(a)(26) of the Act, and traded in the secondary market in the same manner as other equity securities. It is expected that one or more member firms of the Listing Market will act as a market maker or specialist (''Market Maker'') and maintain a market on the Listing Market for the Shares.[5] The price of Shares traded on a Listing Market will be based on a current bid/offer market. Each Share is expected to have a market value of between $50 and $70. Purchases and sales of Shares in the secondary market will be subject to customary brokerage commissions and charges.

7. Applicants expect that purchasers of Creation Units will include institutional investors and arbitrageurs. A Market Maker, in providing for a fair and orderly secondary market for Shares, also may purchase Creation Units in connection with its market-making activities. Applicants expect that secondary market purchasers of Shares will include both institutional and retail investors.[6] Applicants expect that arbitrage opportunities created by the ability to continually purchase or redeem Creation Units at NAV, will ensure that the market price of Shares will not vary much from its NAV.

8. Shares will not be individually redeemable. Shares will only be redeemable in Creation Units from a Fund. To redeem, an investor will have to accumulate enough Shares to constitute a Creation Unit. An investor redeeming a Creation Unit in most cases will receive a portfolio of securities (''Redemption Securities'') plus a balancing cash amount representing the difference between the NAV of a Creation Unit and the market value of the Redemption Securities. As with purchases, a redeeming investor will pay a Transaction Fee. An investor may receive the cash equivalent of a Redemption Security in certain circumstances, such as if the investor is unable, by law or policy, to own a particular Redemption Security.

9. Applicants state that neither the Trust nor any Fund will be advertised, marketed, or otherwise held out as a traditional open-end investment company or mutual fund. Rather, applicants state that each Fund and the Trust will be marketed as a ''Nasdaq-traded fund,'' ''exchange-traded fund,'' ''investment company,'' ''fund,'' and ''trust'' without reference to an ''open-end fund'' or ''mutual fund,'' except to compare and contrast the Trust and the Funds with conventional open-end investment companies. All marketing materials that describe the features or method of obtaining, buying, or selling Creation Units or Shares will prominently disclose that Shares are not individually redeemable and that Shares may be acquired or redeemed from the Fund in Creation Units only. The same type of disclosure will be provided in each Fund's prospectus, SAI, shareholder reports and investor educational materials issued or circulated in connection with the Shares. The Trust will provide copies of its annual and semi-annual shareholder reports to DTC participants for distribution to beneficial holders of Shares.

10. Applicants note that the Trust will have series that operate as ''traditional'' mutual funds that do not rely on the requested relief. To ensure that investors clearly understand the differences between these series and the Funds, applicants agree to a number of disclosure measures detailed in the application, including that the Funds will have separate prospectuses than any other series of the Trust.

Applicants' Legal Analysis

1. Applicants request an order under section 6(c) of the Act granting an exemption from sections 2(a)(32), 5(a)(1), 22(d) and 24(d) of the Act and rule 22c–1 under the Act; and under sections 6(c) and 17(b) of the Act granting an exemption from sections 17(a)(1) and (a)(2) of the Act.

2. Section 6(c) of the Act provides that the Commission may exempt any person, security or transaction, or any class of persons, securities or transactions, from any provision of the Act, if and to the extent that such exemption is necessary or appropriate in the public interest and consistent with the protection of investors and the purposes fairly intended by the policy and provisions of the Act.

Sections 5(a)(1) and 2(a)(32) of the Act

3. Section 5(a)(1) of the Act defines an ''open-end company'' as a management investment company that is offering for sale or has outstanding any redeemable security of which it is the issuer. Section 2(a)(32) of the Act defines a redeemable security as any security, other than short-term paper, under the terms of which the holder, upon its presentation to the issuer, is entitled to receive approximately a proportionate share of the issuer's current net assets, or the cash equivalent. Because Shares will not be individually redeemable, applicants request an order that would permit the Trust to register as an open-end management investment company and issue Shares that are redeemable in Creation Units only. Applicants state that investors may purchase Shares in Creation Units from each Fund and redeem Creation Units. Applicants further state that because the market price of Shares will be disciplined by arbitrage opportunities, the market price of Shares will not vary much from its NAV.

Section 22(d) of the Act and Rule 22c–1 under the Act

4. Section 22(d) of the Act, among other things, prohibits a dealer from selling a redeemable security, which is currently being offered to the public by or through a principal underwriter, except at a current public offering price described in the prospectus. Rule 22c–1 under the Act generally requires that a dealer selling, redeeming, or repurchasing a redeemable security do so only at a price based on its NAV. Applicants state that secondary market

[4] Where a Fund permits a purchaser to deposit cash in lieu of deposting one or more Deposit Securities, the purchaser will be asessed a higher Transaction Fee to offset the transaction cost to the Fund of buying those particular Deposit Securities.

[5] The listing requirements established by Nasdaq require that at least two market makers be registered in Shares in order for the Shares to maintain a listing on Nasdaq. Registered market makers must make a continuous two-sided market in a listing or face regulatory sanctions.

[6] Shares will be registered in book-entry form only. DTC or its nominee will be the record or registered owner of all outstanding Shares. DTC or its participants will maintain records reflecting the beneficial owners of Shares.

trading in Shares will take place at negotiated prices, not at an offering price described in the prospectus, and not at a price based on NAV. Thus, purchases and sales of Shares in the secondary market will not comply with section 22(d) of the Act and rule 22c–1 under the Act. Applicants request an exemption under section 6(c) from these provisions.

5. Applicants assert that the concerns sought to be addressed by section 22(d) of the Act and rule 22c–1 under the Act with respect to pricing are equally satisfied by the proposed method of pricing Shares. Applicants maintain that while there is little legislative history regarding section 22(d), its provisions, as well as those of rule 22c–1, appear to have been designed to (a) prevent dilution caused by certain riskless-trading schemes by principal underwriters and contract dealers, (b) prevent unjust discrimination or preferential treatment among buyers, and (c) ensure an orderly distribution of investment company shares by eliminating price competition from dealers offering shares at less than the published sales price and repurchasing shares at more than the published redemption price.

6. Applicants believe that none of these purposes will be thwarted by permitting Shares to trade in the secondary market at negotiated prices. Applicants state (a) that secondary market trading in Shares will not cause dilution for owners of Shares because such transactions do not directly involve Fund assets, and (b) to the extent different prices exist during a given trading day, or from day to day, these variances occur as a result of third-party market forces such as supply and demand and not as a result of unjust or discriminatory manipulation. Therefore, applicants assert that secondary market transactions in Shares will not lead to discrimination or preferential treatment among purchasers. Finally, applicants contend that the proposed distribution system will be orderly because competitive forces in the marketplace will ensure that the difference between the market price of Shares and their NAV remains narrow.

Section 24(d) of the Act

7. Section 24(d) of the Act provides, in relevant part, that the prospectus delivery exemption provided to dealer transactions by section 4(3) of the Securities Act does not apply to any transaction in a redeemable security issued by an open-end investment company. Applicants request an exemption from section 24(d) to permit dealers selling Shares to rely on the prospectus delivery exemption provided by section 4(3) of the Securities Act.[7]

8. Applicants state that Shares will be listed on a Listing Market and will be traded in a manner similar to other equity securities. Applicants note that dealers selling shares of closed-end investment companies in the secondary market generally are not required to deliver a prospectus to the purchaser.

9. Applicants contend that Shares, as a listed security, merit a reduction in the compliance costs and regulatory burdens resulting from the imposition of prospectus delivery obligations in the secondary market. Because Shares will be listed on a Listing Market, prospective investors will have access to several types of market information about Shares. Applicants state that information regarding market price and volume will be continually available on a real-time basis throughout the day on brokers' computer screens and other electronic services. The previous day's price and volume information for Shares also will be published daily in the financial section of newspapers. In addition, the Fund (or the Listing Market) also intends to maintain a Web site that includes quantitative information updated on a daily basis, including, for each Fund, daily trading volume, the closing NAV and the reported closing price. The Web site for the Fund will also include, for each Fund, on a per Share basis, (a) a calculation of the premium or discount of the closing price against NAV, and (b) data in chart format displaying the frequency distribution of discounts and premiums of the daily closing price against NAV, within appropriate ranges, for each of the four previous calendar quarters.

10. Investors also will receive a product description (''Product Description'') describing a Fund and its Shares. Applicants state that, while not intended as a substitute for a Prospectus, the Product Description will contain information about Shares that is tailored to meet the needs of investors purchasing Shares in the secondary market.

Sections 17(a)(1) and (2) of the Act

11. Section 17(a) of the Act generally prohibits an affiliated person of a registered investment company, or an affiliated person of such a person, from selling any security to or purchasing any security from the company. Section 2(a)(3) of the Act defines ''affiliated person'' to include any person directly or indirectly owning, controlling, or holding with power to vote 5% or more of the outstanding voting securities of the other person and any person directly or indirectly controlling, controlled by, or under common control with, the other person. Section 2(a)(9) of the Act provides that a control relationship will be presumed where one person owns 25% or more of another person's voting securities. Applicants request an exemption from section 17(a) under sections 6(c) and 17(b) to permit persons that are affiliated persons of a Fund or the Trust solely by virtue of (a) a 5% or more, or in excess of a 25%, ownership interest of Shares (and affiliated persons of such affiliated persons that are not otherwise affiliated with such Fund or Trust), or (b) a 5% or more, or in excess of 25%, ownership interest in a Fund or other registered investment company (or series) advised by the Advisor, to purchase and redeem Creation Units through in-kind transactions with the Fund.

12. Section 17(b) of the Act authorizes the Commission to exempt a proposed transaction from section 17(a) of the Act if evidence establishes that the terms of the transaction, including the consideration to be paid or received, are reasonable and fair and do not involve overreaching on the part of any person concerned, and the proposed transaction is consistent with the policies of the registered investment company and the general provisions of the Act. Applicants contend that no useful purpose would be served by prohibiting the affiliated persons of a Fund or the Trust described above from purchasing or redeeming Creation Units through in-kind transactions. The deposit procedure for in-kind purchases and the redemption procedure for in-kind redemptions will be the same for

[7] Applicants do not seek relief from the prospectus delivery requirement for non-secondary market transactions, such as purchases of shares from the Fund or an underwriter. Applicants state that a Fund's prospectus will caution persons purchasing Creation Units that some activities on their part may, depending on the circumstances, result in their being deemed statutory underwriters and subject them to the prospectus delivery and liability provisions of the Securities Act. For example, a broker-dealer firm and/or its client may be deemed a statutory underwriter if it purchases Creation Units from a Fund, breaks them down into the constituent Shares, and sells those Shares directly to customers, or if it chooses to couple the creation of a supply of new Shares with an active selling effort involving solicitation of secondary market demand for Shares. Each Fund's prospectus will state that whether a person is an underwriter depends upon all the facts and circumstances pertaining to that person's activities. Each Fund's prospectus also will caution dealers who are not ''underwriters'' but are participating in a distribution (as contrasted to ordinary secondary market trading transactions), and thus dealing with Shares that are part of an ''unsold allotment'' within the meaning of section 4(3)(C) of the Securities Act, that they would be unable to take advantage of the prospectus delivery exemption provided by section 4(3) of the Securities Act.

all purchases and redemptions. Deposit Securities and Redemption Securities will be valued in the same manner as the securities in the Fund's portfolio. Therefore, applicants state that in-kind purchases and redemptions will afford no opportunity for an affiliated person described above to effect a transaction detrimental to the other holders of Shares. Applicants also believe that in-kind purchases and redemptions will not result in abusive self-dealing or overreaching by affiliated persons of the Funds or Trust.

Applicants' Conditions

Applicants agree that any order granting the requested relief will be subject to the following conditions:

1. Applicants will not register a Future Fund, by means of filing a post-effective amendment to the Trust's registration statement or by any other means, unless (a) applicants have requested and received with respect to such Future Fund, either exemptive relief from the Commission or a no-action letter from the Division of Investment Management of the Commission; or (b) the Future Fund will be listed on a Listing Market without the need for a filing pursuant to rule 19b–4 under the Exchange Act.

2. Each Fund's prospectus and Product Description will clearly disclose that, for purposes of the Act, Shares are issued by the Funds and that the acquisition of Shares by investment companies is subject to the restrictions of section 12(d)(1) of the Act.

3. As long as the Trust operates in reliance on the requested order, the Shares will be listed on a Listing Market.

4. Neither the Trust (with respect to any Fund) nor any of the Funds will be advertised or marketed as an open-end fund or a mutual fund. Each Fund's prospectus will prominently disclose that Shares are not individually redeemable shares and will disclose that the owners of the Shares may acquire those Shares from a Fund and tender those Shares for redemption to a Fund in Creation Units only. Any advertising material that describes the purchase or sale of Creation Units or refers to redeemability will prominently disclose that the Shares are not individually redeemable and that owners of the Shares may acquire those Shares from a Fund and tender those Shares for redemption to a Fund in Creation Units only.

5. The Web site for each Fund, which will be publicly accessible at no charge, will contain the following information, on a per Share basis, for each Fund: (a) the prior Business Day's NAV and the reported closing price, and a calculation of the premium or discount of such price against such NAV; and (b) data in chart format displaying the frequency distribution of discounts and premiums of the daily closing price against the NAV, within appropriate ranges, for each of the four previous calendar quarters. In addition, the Product Description for each Fund will state that the Web site for the Fund has information about the premiums and discounts at which the Fund's Shares have traded.

6. The prospectus and annual report for each Fund will also include: (a) the information listed in condition 5(b), (i) in the case of the prospectus, for the most recently completed year (and the most recently completed quarter or quarters, as applicable) and (ii) in the case of the annual report, for the immediately preceding five years, as applicable; and (b) the following data, calculated on a per Share basis for one, five and ten year periods (or life of the Fund), (i) the cumulative total return and the average annual total return based on NAV and closing price, and (ii) the cumulative total return of the relevant Underlying Index.

7. Before a Fund may rely on the order, the Commission will have approved, pursuant to rule 19b–4 under the Exchange Act, a Listing Market rule requiring Listing Market members and member organizations effecting transactions in Shares to deliver a Product Description to purchasers of Shares.

For the Commission, by the Division of Investment Management, under delegated authority.

J. Lynn Taylor,

Assistant Secretary.

[FR Doc. 03–21937 Filed 8–26–03; 8:45 am]

BILLING CODE 8010–01–P

SECURITIES AND EXCHANGE COMMISSION

[Release No. IC–26164; 812–13001]

Merrill Lynch Principal Protected Trust, et al.; Notice of Application

August 20, 2003.

AGENCY: Securities and Exchange Commission (''Commission'').

ACTION: Notice of application for an order under section 6(c) of the Investment Company Act of 1940 (''Act'') for an exemption from section 12(d)(3) of the Act, under sections 6(c) and 17(b) of the Act for an exemption from section 17(a) of the Act, and under section 17(d) of the Act and rule 17d–1 under the Act to permit certain joint transactions.

APPLICANTS: Merrill Lynch Principal Protected Trust (the ''Trust''), Merrill Lynch Investment Managers, L.P. (''MLIM''), and Fund Asset Management, L.P. (''FAM,'' and together with MLIM, the ''Advisers'').

SUMMARY OF APPLICATION: Applicants request an order to permit any existing and future series of the Trust, any existing and future registered investment company or series that has as its investment adviser an Adviser or other registered investment adviser that is in the control of, controlled by, or under common control with an Adviser (collectively with the Trust and its present and future series, the ''Funds'') to enter into an arrangement with any entity that now or in the future is in control of, controlled by, or under common control with, an Adviser (a ''Merrill Lynch Affiliate'') to provide principal protection to the Fund (''Principal Protection''), or to serve as a hedging counterparty (''Hedging Counterparty'') where an unaffiliated third party providing Principal Protection to the Fund seeks to enter into a derivatives contract or reinsurance contract with a Merrill Lynch Affiliate to hedge all or a portion of the risks under the Principal Protection arrangement.[1]

FILING DATES: The application was filed on August 13, 2003.

HEARING OR NOTIFICATION OF HEARING: An order granting the application will be issued unless the Commission orders a hearing. Interested persons may request a hearing by writing to the Commission's Secretary and serving applicants with a copy of the request, personally or by mail. Hearing requests should be received by the Commission by 5:30 p.m. on September 15, 2003, and should be accompanied by proof of service on applicants, in the form of an affidavit or, for lawyers, a certificate of service. Hearing requests should state the nature of the writer's interest, the reason for the request, and the issues contested. Persons who wish to be notified of a hearing may request notification by writing to the Commission's Secretary.

ADDRESSES: Secretary, Commission, 450 Fifth Street, NW., Washington, DC 20549–0609. Applicants: Andrew J. Donohue, Esq., Merrill Lynch Investment Managers, L.P., P.O. Box

[1] All existing entities currently intending to rely on the requested order have been named as applicants. Any other existing and future entity that relies on the order will comply with the terms and conditions of the application.

9011, Princeton, New Jersey 08543–9011.

FOR FURTHER INFORMATION CONTACT: Jaea F. Hahn, Senior Counsel, at (202) 942–0614, or Michael W. Mundt, Senior Special Counsel, at (202) 942–0564 (Division of Investment Management, Office of Investment Company Regulation).

SUPPLEMENTARY INFORMATION: The following is a summary of the application. The complete application may be obtained for a fee at the Commission's Public Reference Branch, 450 Fifth Street, NW., Washington, DC 20549–0102 (tel. 202–942–8090).

Applicants' Representations

1. The Trust, a statutory trust organized under the laws of Delaware, is registered as an open-end investment company under the Act. Each Fund will be registered under the Act as, or be a series of, a management investment company. Each Adviser is registered with the Commission under the Investment Advisers Act of 1940 and serves as investment adviser to the Funds.

2. Each Fund proposes to provide Principal Protection, pursuant to which shareholders who hold their Fund shares for a prescribed period of time (the ''Protection Period'')[2] will be able, at the end of the period (the ''Maturity Date''), to redeem their shares and receive no less than the amount of their initial investment, subject to certain adjustments (the ''Protected Amount''). Applicants state that Principal Protection will be achieved primarily through the use of a mathematical formula that allocates assets based on the ''Constant Proportion Portfolio Insurance'' model (the ''Formula'').[3] In addition to using the Formula, the Fund may also enter into a financial guarantee agreement, warranty agreement or other principal protection agreement[4] or may acquire an insurance policy (each a ''Protection Agreement''), in order to ensure that the Fund can meet its obligation to pay each redeeming shareholder the Protected Amount on the Maturity Date.[5] The entity providing Principal Protection (''Protection Provider'') may be a bank, brokerage firm, insurance company or other financial institution. In certain cases, the Protection Provider may seek to hedge all or a portion of its risks by entering into a derivatives contract or reinsurance contract with a Hedging Counterparty. Each Fund will pay a fee to the Protection Provider, typically equal to a percentage of the Fund's average daily net assets.

3. Each Protection Agreement will require the Protection Provider to pay the Fund an amount equal to any shortfall between the aggregate Protected Amount and the net asset value (''NAV'') of the Fund on the Maturity Date (the ''Shortfall''). Under the terms of each Protection Agreement, the Fund will be required to manage its assets within certain investment parameters, based in large part on the asset allocations determined by the Formula. If the Fund fails to comply with these allocations (''Trigger Event''), the Protection Provider may demand the Fund cure the situation by reallocating Fund assets or, in the event the Fund fails to effect the reallocation within a specified period of time, by causing the Fund to defease its portfolio and allocate all of its assets to the Fund's Protection Component (a ''Defeasance Event'').

4. A Protection Agreement and the fee for the Protection Agreement will be subject to approval by the Board of Directors or Trustees of each Fund (the ''Board''), including a majority of those Directors or Trustees who are not interested persons of a Fund or an Adviser, as defined in section 2(a)(19) of the Act (the ''Independent Trustees''). In the event that a Fund wishes to consider entering into a Protection Agreement with a Merrill Lynch Affiliate, or with a Protection Provider that is otherwise not an affiliated person of the Fund or its Adviser, or an affiliated person of such a person (an ''Unaffiliated Provider''), but that wants to use a Merrill Lynch Affiliate as its Hedging Counterparty (each, an ''Affiliated Protection Arrangement''), the Adviser will be required to conduct a bidding process to select the Protection Provider. Applicants state that the Adviser will initially solicit at least three other bids in addition to the bid relating to an Affiliated Protection Arrangement, then will engage in negotiations with all of the bidders. At the end of the negotiation process, all bidders who wish to participate will submit final bids. All final bids will be due at the same time and no bidder will be permitted to change its final bid once submitted. After final bids are submitted, no bidder, including a Merrill Lynch Affiliate, will have access to any competing bids until after the Protection Agreement is entered into by the Fund. In order for the Adviser to recommend the bid relating to an Affiliated Protection Arrangement, the Fund must have also received at least two bona fide final bids that are not Affiliated Protection Arrangements.[6] The Adviser will evaluate final bids and recommend a bid for acceptance by the Board, together with an explanation of the basis for this recommendation and a summary of the material terms of any bids that were rejected. Applicants state that in addition to cost, other factors such as creditworthiness will be significant in the Adviser's evaluation of bids, and thus, the Adviser may recommend to the Board a Principal Provider who does not submit the bid with the lowest fee rate.[7] A majority of the Board, including a majority of the Independent Trustees, must approve the acceptance of a bid involving an Affiliated Protection Arrangement, as well as the general terms of the proposed Protection Arrangement. Upon the conclusion of the Adviser's negotiation of the Affiliated Protection Arrangement, the Board must approve the final Protection Agreement, and determine that the terms of the Affiliated Protection Arrangement, as so

[2] The life of a Fund offering Principal Protection will generally be divided into three time periods: (a) An initial offering period during which the Fund will sell shares to the public; (b) the Protection Period during which the Fund will not normally offer its shares to the public and the Fund's assets will be invested pursuant to the Formula (as defined below); and (c) a period after the Maturity Date (the ''Post-Protection Period''), during which the Fund will offer its shares on a continuous basis and pursue an objective that does not include Principal Protection, or alternatively, will wind up and cease operations.

[3] The objective of the Formula is to maximize the allocation of a Fund's assets that may be invested for purposes other than Principal Protection (the ''Portfolio Component''), thus gaining exposure to the securities markets, while attempting to minimize the risk of a shortfall (as defined below) by investing a portion of the Fund's assets in fixed income securities (the ''Protection Component'').

[4] Other principal protection agreements may take the form of a swap agreement or other privately negotiated derivatives contract with similar economic characteristics requiring the Protection Provider (as defined below) to make payments to the Fund in the event of a Shortfall (as defined below).

[5] The Protected Amount may be reduced (a) to the extent the Fund incurs extraordinary expenses, such as litigation expenses, which are not covered by the Protection Agreement, (b) if the Adviser is required to make payments to the Protection Provider and/or the Fund (''Adviser Payment'') under the Protection Agreement as a result of its own negligence or certain other disabling conduct and there is a dispute regarding such payment, or (c) as otherwise described in the Protection Agreement, subject in each case to appropriate prospectus disclosure. The Protected Amount will not be reduced by the Fund's ordinary fees and expenses, including its advisory fees.

[6] If an Unaffiliated Provider submits multiple bids, each with a different Hedging Counterparty, each submission will constitute a separate bid.

[7] If the Protection Provider recommended by the Adviser does not propose the lowest fee to provide Principal Protection and the Board approves a Protection Agreement with such Protection Provider, the Board minutes will reflect the reasons why the Protection Provider requiring the higher fee was approved.

finalized, are not materially different from the terms of the accepted bid.

5. The Board will exercise oversight responsibilities in connection with any Protection Agreement and will establish a special committee (the ''Committee''), a majority of the members of which will be Independent Trustees, if the Fund enters into an Affiliated Protection Arrangement. If a Trigger Event or a Defeasance Event occurs under the Protection Agreement (each, a ''Protection Event''), the Adviser will be required to notify the Committee as soon as practicable, and absent special circumstances, before a decision is reached by the Protection Provider and the Adviser as to how to effect any necessary cure. On or about the Maturity Date, the Board will review information comparing the aggregate Protected Amount with the Fund's total NAV on the Maturity Date, and will review and approve the amount of any Shortfall to be submitted for payment to the Protection Provider under the Protection Agreement (including the amount of any required Adviser Payment to the Fund) (the ''Approved Shortfall Amount'').

Applicants' Legal Analysis

A. Section 12(d)(3) of the Act

1. Section 12(d)(3) of the Act generally prohibits a registered investment company from acquiring any security issued by any person who is a broker, dealer, investment adviser, or engaged in the business of underwriting. Rule 12d3–1 under the Act exempts certain transactions from the prohibition of section 12(d)(3) if certain conditions are met. One of these conditions, set forth in rule 12d3–1(c), provides that the exemption provided by the rule is not available when the issuer of the securities is the investment adviser, promoter, or principal underwriter of the investment company, or any affiliated person of such entities. In addition, rule 12d3–1(b) does not permit a registered investment company to (i) own more than five percent of a class of equity securities of an issuer that is engaged in securities related activities; (ii) own more than ten percent of such an issuer's debt securities; or (iii) invest more than five percent of the value of its total assets in the securities of any such issuer. Section 6(c) of the Act authorizes the Commission to exempt any person or transaction from any provision of the Act to the extent that such exemption is necessary or appropriate in the public interest and consistent with the protection of investors and the purposes fairly intended by the policies and provisions of the Act.

2. Applicants state that by virtue of entering into an Affiliated Protection Arrangement with a Merrill Lynch Affiliate that is a broker, dealer, underwriter or investment adviser to a registered investment company or an investment adviser registered under the Investment Advisers Act, a Fund may be deemed to have acquired a security from the Merrill Lynch Affiliate.[8] In addition, applicants state that it is possible that a Protection Agreement entered into by the Fund (whether pursuant to an Affiliated Protection Agreement or otherwise) may represent more than ten percent of the debt securities of a Protection Provider that is involved in securities related activities or more than five percent of the total assets of the Fund. Therefore, applicants seek an exemption from section 12(d)(3) to the extent necessary to permit the Fund to enter into Affiliated Protection Arrangements with a Merrill Lynch Affiliate or a Protection Agreement with another Protection Provider that is involved in securities related activities.

3. Applicants state that section 12(d)(3) was intended to prevent investment companies from exposing their assets to the entrepreneurial risks of securities related businesses and to prevent reciprocal practices between investment companies and securities related businesses. Applicants assert that the proposed transactions are consistent with the policy and intent underlying section 12(d)(3). In terms of the risk-preventing element of section 12(d)(3), applicants state that the Adviser and Board, when evaluating the credentials of a prospective Protection Provider, will take into account the Protection Provider's creditworthiness, any ratings assigned by a nationally recognized statistical ratings organization (''NRSRO''), and the availability of audited financial statements. Applicants state that the purpose of the Fund's Protection Agreement is to provide Principal Protection for the Fund, not to reward a Merrill Lynch Affiliate (or any other broker-dealer) for sales of Fund shares. Moreover, applicants believe that the conditions set forth in the application will ensure that each Fund is operated in the interests of its shareholders and not in the interests of a Merrill Lynch Affiliate or any other Protection Provider.

B. Section 17(a) of the Act

1. Section 17(a)(1) and (2) of the Act generally prohibit the promoter or principal underwriter, or any affiliated person of the promoter or principal underwriter, of a registered investment company, acting as principal, knowingly to sell or purchase any security or other property to or from such investment company. Section 2(a)(3) of the Act defines an ''affiliated person'' of another person to include, among other things: (a) Any person directly or indirectly owning, controlling, or holding with power to vote 5% or more of the outstanding voting securities of the other person; (b) any person 5% or more of whose outstanding voting securities are directly or indirectly owned; and (c) any person directly or indirectly controlling, controlled by, or under common control with, the other person. Section 17(b) of the Act authorizes the Commission to exempt a proposed transaction from the terms of section 17(a) if evidence establishes that the terms of the proposed transaction are reasonable and fair and do not involve overreaching, and the proposed transaction is consistent with the policies of the registered investment company involved and the purposes of the Act.

2. Applicants state that depending on the structure of a Protection Agreement, it might be deemed to be a security or other property, and the Fund's entering into a Protection Agreement with a Merrill Lynch Affiliate might be deemed to be the acquisition of a security or other property from a Merrill Lynch Affiliate. In addition, applicants state that if a Merrill Lynch Affiliate were to serve as a Hedging Counterparty to an Unaffiliated Provider, the Merrill Lynch Affiliate might under certain circumstances be deemed to be indirectly involved in the sale of a security or other property to the Fund. Applicants request an exemption under sections 6(c) and 17(b) to permit the proposed transactions.

3. Applicants submit that the involvement of a Merrill Lynch Affiliate in an Affiliated Protection Arrangement will benefit a Fund and its shareholders given the expertise of the Merrill Lynch Affiliates in structuring and providing credit enhancements for Principal Protection arrangements, and the alignment of interests that exist between the Merrill Lynch Affiliates and the Funds. Applicants argue that the relationship of a Fund and Unaffiliated Provider may be more adversarial, with the protection of the Unaffiliated

[8] Applicants state that depending on the structure of the Protection Agreement, while certain types of Protection Agreements would not meet the definition of ''security'' contained in section 2(a)(36) of the Act such as insurance contracts, certain types of derivative agreements may be deemed to constitute securities.

Provider's rights and remedies being of paramount importance to the Unaffiliated Provider, which could result in the Unaffiliated Provider exhibiting a greater willingness to declare a Defeasance Event or to rely on a clause permitting it to avoid liability to the Fund than would a Merrill Lynch Affiliate in similar circumstances. Applicants further argue that a Merrill Lynch Affiliate may assume a greater risk to itself by avoiding a Defeasance Event for the same fee charged by an Unaffiliated Provider without creating additional risk to the Fund or its shareholders by allowing a greater portion of the Fund's assets to remain invested in the Portfolio Component. Applicants also argue that the use of a Merrill Lynch Affiliate as Protection Provider may lower the cost of Principal Protection since there is a limited universe of Protection Providers with which a Fund may enter into a Protection Agreement. In addition, because a Merrill Lynch Affiliate may have a greater comfort level with the Formula and certain investment strategies to be used by the Advisers than an Unaffiliated Provider, applicants state that this may allow the Merrill Lynch Affiliate to enter into a Hedging Transaction with an Unaffiliated Provider for a lower fee or spread than would be available through a counterparty unaffiliated with the Fund.

4. Applicants submit that the conditions applicable to each Affiliated Protection Arrangement will ensure that such arrangement will be reasonable and fair to each Fund and that no Merrill Lynch Affiliate will be able to engage in overreaching. Applicants state that a Fund will not be able to participate in an Affiliated Protection Arrangement until after a bidding process has been completed in which the Fund receives at least two bona fide offers for Principal Protection from an Unaffiliated Provider not seeking to hedge with a Merrill Lynch Affiliate, and that a Merrill Lynch Affiliate will not have an unfair advantage over other bidders in winning the bid. A Fund may not accept a bid or subsequently enter into an Affiliated Protection Arrangement unless it has been approved by the Fund's Board, including a majority of Independent Trustees, who must determine that entering into the Affiliated Protection Arrangement is in the best interests of the Fund and its shareholders and meets the standards specified in section 17(b) of the Act. In addition, applicants state that if a Fund enters into an Affiliated Protection Arrangement, the Fund's Board will establish a Committee to represent the Fund's interests if a Protection Event should occur. Lastly, applicants state that the Board will approve the Approved Shortfall Amount to be submitted for payment to the Affiliated Protection Provider and that the Fund will not accept a lesser amount in settlement of its claim without a further Commission exemptive order.

5. Applicants submit that an Affiliated Protection Arrangement will be consistent with the policies of each Fund, as recited in its registration statement. Applicants further submit that an Affiliated Protection Arrangement, subject to the conditions set forth in the application, will be consistent with the purposes fairly intended by the policy and provisions of the Act and will be in the best interests of each Fund and its shareholders.

C. Section 17(d) of the Act

1. Section 17(d) of the Act and rule 17d–1 under the Act generally prohibit any affiliated person of, or principal underwriter for, a registered investment company, or any affiliated person of, or principal underwriter, acting as principal, from effecting any transaction in connection with any joint enterprise or other arrangement or profit-sharing plan in which the investment company participates, unless an application regarding the joint transaction has been filed with the Commission and granted by order. Under rule 17d–1, in passing upon such applications, the Commission considers whether the participation of the registered investment company in the joint transaction is consistent with the provisions, policies and purposes of the Act and the extent to which such participation is on a basis different or less advantageous than that of other participants.

2. Applicants state that the fee paid to a Merrill Lynch Affiliate pursuant to an Affiliated Protection Arrangement (either by the Fund directly under a Protection Agreement or indirectly through a Hedging Transaction) may be deemed to involve a joint enterprise or joint arrangement or profit sharing plan under section 17(d) and rule 17d–1 because a Merrill Lynch Affiliate may be in control of, controlled by or under common control with the Adviser of a Fund, and the Merrill Lynch Affiliate's compensation as the Protection Provider or Hedging Counterparty will be based on the Fund's assets. In addition, the Merrill Lynch Affiliate might make a profit or suffer a loss depending on the performance of the Fund. Applicants also state that an Affiliated Protection Arrangement could be deemed to involve a joint enterprise or joint arrangement because of the coordination and possible ongoing negotiations between a Fund and a Merrill Lynch Affiliate in managing the Fund's risk exposure.[9] Applicants thus request an order pursuant to section 17(d) and rule 17d–1.

3. Applicants state that the purpose of section 17(d) is to avoid overreaching by and unfair advantage to insiders. Applicants submit that the conditions proposed in the application will ensure that a Fund and its shareholders are treated fairly and not taken advantage of by a Merrill Lynch Affiliate. Applicants submit that a Fund and its shareholders will benefit from the participation of a Merrill Lynch Affiliate in an Affiliated Protection Arrangement. For these reasons, applicants state that the proposed arrangement satisfies the standards of section 17(d) and rule 17d–1.

Applicants' Conditions

Applicants agree that any order granting the requested relief shall be subject to the following conditions:

1. Prior to recommending to the Board that a Fund enter into an Affiliated Protection Arrangement, the Adviser will conduct a competitive bidding process in which the Adviser solicits bids on at least three Protection Agreements that would not constitute Affiliated Protection Arrangements. At a reasonable amount of time prior to the date bids are to be submitted, the Adviser will solicit bids by supplying prospective bidders with a bid invitation letter that includes any requirement for a potential Protection Provider to include audited financial statements in the Fund's registration statement, a copy of the relevant sections of a draft prospectus of the Fund, and a draft of the Protection Agreement. Initial bids will be due at the same time, and no bidder will have access to any competing bids prior to its own submission. After initial bids are received, the Adviser will negotiate in good faith with each of the bidders to obtain more favorable terms for the Fund. During these negotiations, all bidders will have access to equal information about competing bids. At the end of this process, all bidders who

[9] For example, applicants state that a Merrill Lynch Affiliate could seek to request that a Fund's assets be invested not to seek to maximize the Fund's return, but in a manner designed to protect the Merrill Lynch Affiliate's interest by over-allocating the Fund's assets to the Protection Component so as to minimize the risk that a Merrill Lynch Affiliate would be called upon to make a payment under an Affiliated Protection Arrangement.

wish to participate will submit final bids. All such final bids will be due at the same time, and no bidder will be permitted to change its final bid once submitted. After the final bids are submitted, no bidder, including a Merrill Lynch Affiliate, will have access to any competing bids until after the Protection Agreement is entered into by the Fund. A Fund may not enter into an Affiliated Protection Arrangement unless two bona fide final bids have been received for Protection Agreements that would not constitute Affiliated Protection Arrangements.

2. If the Adviser recommends that the Board approve an Affiliated Protection Arrangement, the Adviser must provide the Board with an explanation of the basis for its recommendation and a summary of the material terms of any bids that were rejected.

3. The Fund's Board, including a majority of Independent Trustees, must approve the acceptance of a bid involving an Affiliated Protection Arrangement, as well as the general terms of the proposed Protection Agreement. In evaluating the final bids and the recommendations from the Adviser, the Board will consider, among other things: (i) The fee rate to be charged by a potential Protection Provider; (ii) the structure and potential limitations of the proposed Principal Protection arrangement and any legal, regulatory or tax implications of such arrangement; (iii) the credit rating (if any) and financial condition of the potential Protection Provider, including any ratings assigned by any NRSRO; and (iv) the experience of the potential Protection Provider in providing Principal Protection, including in particular to registered investment companies. If the Affiliated Protection Arrangement approved by the Board does not reflect the lowest fee submitted in a proposal to provide the Principal Protection, the Board will reflect in its minutes the reasons why the higher cost option was selected.

4. Upon the conclusion of the Adviser's negotiations of the Affiliated Protection Arrangement, including the Protection Agreement, the Fund's Board, including a majority of Independent Trustees, must approve the final Protection Agreement and determine that the terms of the final Affiliated Protection Arrangement, as so finalized, are not materially different from the terms of the accepted bid. The Board, including a majority of its Independent Trustees, will also determine that entering into the Affiliated Protection Arrangement will be in the best interests of the Fund and its shareholders and meets the standards specified in section 17(b) of the Act. The Board will reflect these findings and their basis in its minutes.

5. If a Merrill Lynch Affiliate is chosen as the Protection Provider or Hedging Counterparty, it will not charge a higher fee for its Protection Agreement or Hedging Transaction than it would charge for similar agreements or transactions for unaffiliated parties that are similarly situated to the Fund. Any Merrill Lynch Affiliate acting as Hedging Counterparty will not be directly compensated by the Fund and the Fund will not be a party to any Hedging Transaction.

6. In the event the Fund enters into an Affiliated Protection Arrangement, the Board will establish a Committee, a majority of whose members will be Independent Trustees, to represent the Fund in any negotiations relating to a Protection Event. The Adviser will notify the Committee of any Protection Event as soon as practicable, and absent special circumstances, before a decision is reached by the Protection Provider and the Adviser as to how to effect any cure. All Protection Events will be brought to the attention of the full Board at the next regularly scheduled Board meeting.

7. The Adviser will present a report to the Board, at least quarterly, comparing the actual asset allocation of the Fund's portfolio with the allocation required under the Protection Agreement, describing any Protection Events, and summarizing any negotiations that were the subject of the previous condition.

8. At the conclusion of the Protection Period, the Adviser of a Fund will report to the Fund's Board any Shortfall potentially covered under an Affiliated Protection Arrangement (including, for this purpose, the amount of any required Adviser Payment). The Board, including a majority of Independent Trustees, will evaluate the Shortfall and will determine the amount of the claim (previously defined as the Approved Shortfall Amount) under the Protection Agreement to be submitted to the Protection Provider. The Fund will not settle any claim under the Protection Agreement for less than the full Approved Shortfall Amount determined by the Board without obtaining a further exemptive order from the Commission.

9. No less than a majority of a Fund's Board will consist of Independent Trustees.

10. The Independent Trustees will be represented by independent legal counsel within the meaning of Rule 0–1 under the Act.

11. The Adviser, under the supervision of the Board, will maintain sufficient records to verify compliance with the conditions of the order. Such records will include, without limitation: (i) An explanation of the basis upon which the Adviser selected prospective bidders; (ii) a list of all bidders to whom a bid invitation letter was sent and copies of the bid invitation letters and accompanying materials; (iii) copies of all initial and final bids received, including the winning bid; (iv) records of the negotiations with bidders between their initial and final bids; (v) the materials provided to the Board in connection with the Adviser's recommendation regarding the Protection Agreement; (vi) the final price and terms of the Protection Agreement with an explanation of the reason the arrangement is considered an Affiliated Protection Arrangement; and (vii) records of any negotiations with the Protection Providers related to the occurrence of a Protection Event and the satisfaction of any obligations under a Protection Agreement. All such records will be maintained for a period ending not less than six years after the conclusion of the Protection Period, the first two years in an easily accessible place, and will be available for inspection by the staff of the Commission.

For the Commission, by the Division of Investment Management, pursuant to delegated authority.

J. Lynn Taylor,

Assistant Secretary.

[FR Doc. 03–21938 Filed 8–26–03; 8:45 am]

BILLING CODE 8010–01–P

SECURITIES AND EXCHANGE COMMISSION

[Release No. 35–27715]

Filings Under the Public Utility Holding Company Act of 1935, as Amended (''Act'')

August 20, 2003.

Notice is hereby given that the following filing(s) has/have been made with the Commission pursuant to provisions of the Act and rules promulgated under the Act. All interested persons are referred to the application(s) and/or declaration(s) for complete statements of the proposed transaction(s) summarized below. The application(s) and/or declaration(s) and any amendment(s) is/are available for public inspection through the Commission's Branch of Public Reference.

Interested persons wishing to comment or request a hearing on the application(s) and/or declaration(s)

should submit their views in writing by September 12, 2003, to the Secretary, Securities and Exchange Commission, Washington, DC 20549–0609, and serve a copy on the relevant applicant(s) and/or declarant(s) at the address(es) specified below. Proof of service (by affidavit or, in the case of an attorney at law, by certificate) should be filed with the request. Any request for hearing should identify specifically the issues of facts or law that are disputed. A person who so requests will be notified of any hearing, if ordered, and will receive a copy of any notice or order issued in the matter. After September 12, 2003, the application(s) and/or declaration(s), as filed or as amended, may be granted and/or permitted to become effective.

AGL Resources Inc. et al. (70–9813)

AGL Resources Inc. (''AGLR''), located at Ten Peachtree Place, NE., Atlanta, Georgia 30309, a registered holding company under the Act, and its wholly-owned subsidiary, Global Energy Resource Insurance Corp. (''GERIC'') located at Romasco Place, Wickhams Cay 1, P.O. Box 3140, Road Town, Tortola, British Virgin Islands, (collectively, ''Applicants'') have filed a post-effective amendment under sections 9(a) and 10 of the Act to their application previously filed with the Commission under sections 6(a), 7, 9(a) and 10 and rule 43 of the Act.

Applicants are seeking authorization for GERIC (1) to provide finite insurance program services to AGLR and its subsidiaries (''AGLR System'') as described in more detail below, and (2) to retain additional risk associated with the AGLR System's self-insured retention.

By an order dated April 13, 2001 (HCAR No. 27378) (''Captive Order''), the Commission authorized AGLR to organize a subsidiary to underwrite a certain portion of the insurance purchased by the AGLR System companies, which risks it would then transfer to third-party reinsurance companies. In particular, the subsidiary would underwrite coverage for the AGLR System companies over their self-insured retention and above a layer of traditional insurance. The subsidiary was also authorized to retain a small amount of risk, not to exceed $1 million, for each type of insurance coverage (''GERIC Retained Risk Limit''). In accordance with the Captive Order, AGLR formed GERIC, which began to provide insurance services to the AGLR System on May 1, 2001.

Applicants state that the AGLR System maintains insurance for automobile and general liability exposures, directors and officers liability, ''all risk'' property coverage, workers'' compensation liability and other risks. In addition, the AGLR System companies may provide wrap-up construction insurance coverage to nonaffiliated construction contractors working for the AGLR System. The AGLR System currently maintains a self-insured retention with respect to its insured risks of up to $1 million (except with respect to automobile liability and terrorism insurance, where the self-insured retentions are $2 million and $5 million, respectively) and purchases insurance to cover risks over and above that amount.

The Captive Order noted that GERIC was authorized to operate as an insurance company in the British Virgin Islands. Initially, GERIC would focus on providing insurance coverage for automobile, general liability, risk property, boiler and machinery, directors and officers, crime, fiduciary and workers compensation. The Captive Order noted that, in the future, GERIC might seek to underwrite additional types of insurance and retain a small amount of risk that for each additional type of insurance would not exceed $1 million. GERIC may underwrite additional types of insurance only when: (1) A reinsurer is ceded 100% of the underwritten risk; (2) the insurance is related to an authorized or permitted AGLR System business activity; (3) direct placement of reinsurance by GERIC could be reasonably expected to save the AGLR System a portion of the risk premium it would otherwise have paid; and (4) normal deductible amounts are retained by the AGLR System companies and where GERIC can obtain, as appropriate, excess or stop-loss coverage.

The Applicants state that GERIC targets its underwriting activity on the portions of the AGLR System's liability program where the greatest cost savings are possible. Presently, GERIC provides excess coverage for the types of insurance listed above that is placed above the AGLR System's self-insured retention and above a layer of traditional coverage that is maintained by AGLR for the benefit of the AGLR System. GERIC reinsures all of the risks that it underwrites with reinsurance companies, except with respect to coverage for property crime where it also covers a $500,000 AGLR System deductible. GERIC intends to begin providing construction wrap-up insurance in the near future.

Applicants now propose that GERIC offer the AGLR System a finite insurance program that would provide coverage for the layer of risk, currently covered by traditional retail insurance carriers, that resides between the self-insured retention and the excess risk reinsured by GERIC with reinsurance companies. This intermediate layer of insurance coverage extends generally from the self-insured retention level to the $10,000,000 level. Because this intermediate level of coverage is more likely to be accessed by a claim than the higher layer of excess coverage, it is responsible for a significant percentage of the AGLR System's premium costs.

Under the finite insurance program the AGLR System companies would use premium dollars presently used to acquire traditional insurance coverage for the intermediate risk layer to fund a reserve that would be used instead of traditional insurance coverage to cover losses related to the intermediate risk level (*i.e.*, the risk above the self-insured retention and below the reinsured risk). For example, the AGLR System's premiums for intermediate risk layer coverage are expected to be approximately $2.5 million per year, including the construction wrap-up program that GERIC intends to initiate in October, 2003. After collecting the AGLR System's finite premium payments, GERIC would invest the payments in reserves consisting of U.S. Treasury securities and other securities permitted by section 9(c) of the Act and rule 40. The balance of the premium payments (less GERIC's at-cost administrative expenses) not invested in reserves would be used to purchase third-party coverage for any loss that could not be covered by the reserve maintained by GERIC. As the reserves accumulate over several years, the third party coverage would be expected to become less expensive. In addition, when the reserve reaches an amount adequate to cover anticipated losses, the reserve funding commitment from the AGLR System companies can be reduced with commensurate premium savings.

The finite program would not increase the risk of an uncovered loss since amounts held by GERIC in reserve would be invested in secure assets and available to fund claims. Uncovered losses also would be avoided because third party provided coverage would be in place to the extent GERIC's reserves were not fully funded at the time of a loss. Reinsurance would continue to be maintained to cover liabilities that would exceed the intermediate layer of liability coverage that would be provided by the combination of GERIC's reserves and the third party coverage. The finite program would provide the opportunity to further reduce the AGLR System's insurance costs because once GERIC's reserves have been fully

funded, subsequent contributions by the AGLR System companies can be substantially reduced to a level adequate to maintain the reserves at a fully funded level and to provide reinstatement coverage that would step in to provide protection if the reserves were exhausted.

The third-party coverage would be provided by a reinsurance company or through the acquisition of a capital markets product that is entered into on an exchange or with an investment-grade counterparty. Applicants request that the Commission reserve jurisdiction with respect to the use of capital markets products to provide third-party coverage until the record has been supplemented with additional detail about the nature of the product. GERIC will establish reserves consistent with the insurance regulations of the British Virgin Islands and sound actuarial practices.[1] As provided in the Captive Order, GERIC will not be operated to generate profits beyond what is necessary to maintain adequate reserves. To the extent that premiums and interest earned on the reserves exceed current claims and expenses, GERIC will accumulate reserves that will allow it to cover claims in years when claims and expenses exceed premiums. To the extent that losses are lower than projected, GERIC will correspondingly lower premiums and thus return excess capital to AGLR System companies.

Applicants assert that GERIC's current insurance program has been effective in managing the AGLR System's insurance costs. As shown in the certificate of notification under rule 24, filed on April 1, 2003, GERIC's operations for the period May 1, 2001, to May 31, 2002, resulted in first year premium savings for the AGLR System of $386,751. For the period June 1, 2002, through May 31, 2003, GERIC contributed benefits to the AGLR System by making possible the avoidance of a portion of the increase in insurance premiums that followed the terrorist attack of September 11, 2001, and other events. Applicants assert that this experience demonstrates that by providing the AGLR System with the flexibility to access the insurance markets independent of traditional insurers, GERIC serves a valuable function that, although not readily quantifiable, can be a significant factor in managing insurance costs.

Similarly, Applicants project that the proposed finite program would produce savings for the AGLR System companies. GERIC has compared the AGLR System premium costs for the intermediate risk layer (losses of $1 million to $10 million) over four years with the costs associated with funding the captive insurance program. Projected losses over this same period also were analyzed. GERIC's analysis concludes that the finite insurance program could provide savings of several million dollars.

A British Virgin Islands management company has been retained to provide administrative services to GERIC. AGL Services Company (''AGSC'') employees are directors and principal officers of GERIC and they oversee the performance of the administrative activities by the management company. The administrative functions directed by AGSC through the management company include: (1) Accounting and reporting activities; (2) legal, actuarial, banking and audit services; (3) negotiating reinsurance contracts, policy terms and conditions; (4) invoicing and making payments, and; (5) managing regulatory affairs. The existing AGSC claim staff performs the claims adjusting function. It is not anticipated that managing the finite program would require additional staff or materially increase the administrative costs associated with GERIC's operations. All goods and services provided by AGSC to GERIC would be provided in accordance with section 13 of the Act and any applicable rules under that section, and costs incurred by GERIC would be recovered in premiums charged to the AGLR System companies.

Applicants propose that in addition to the authorization requested for the finite program, that the Commission increase the Self-Insurance Limit from $1 million to $5 million. In some lines of insurance the AGLR System has increased, or expects that it may increase, its self-insured retention. For example, in the automobile liability line of coverage the AGLR System's self-insured retention is now $2 million. Increasing the self-insured retention helps the AGLR System to manage its insurance costs and to adjust limits in response to inflation. An increase in the Self-Insurance Limit would allow GERIC to retain the risk associated with the self-insured retention of the AGLR System beyond the current $1 million limit. GERIC will maintain appropriate reserves to cover any risk of loss that it retains under an increased Self-Insurance Limit.

GERIC will continue to be bound by the condition in the Captive Order that it may underwrite additional types of insurance only when: (1) A reinsurer is ceded 100% of the underwritten risk; (2) the insurance is related to an authorized or permitted AGLR System business activity; (3) direct placement of reinsurance by GERIC would be reasonably expected to save the AGLR System a portion of the risk premium it would otherwise have paid; and (4) normal deductible amounts are retained by the AGLR System companies and where GERIC can obtain, as appropriate, excess or stop-loss coverage.

For the Commission, by the Division of Investment Management, pursuant to delegated authority.

J. Lynn Taylor,

Assistant Secretary.

[FR Doc. 03–21939 Filed 8–26–03; 8:45 am]

BILLING CODE 8010–01–P

[1] Applicants expect that premium payments would be sufficient to establish and maintain the necessary reserves. If, however, additional capital is required, AGLR may provide capital to GERIC through equity and or debt purchases exempt under Rule 52, or guarantees, letters of credit or other forms of credit support authorized by Commission order. AGL Resources Inc., Holding Co. Act Release No. 27243 (October 5, 2000).

SECURITIES AND EXCHANGE COMMISSION

[File No. 500–1]

In the Matter of Tamarak, Inc.; Order of Suspension of Trading

August 25, 2003.

It appears to the Securities and Exchange Commission that there is a lack of current and accurate information concerning the securities of Tamarak, Inc. (''Tamarak'') because of questions regarding the accuracy and adequacy of assertions in press releases by Tamarak, concerning, among other things: (1) Tamarak's plans and financial ability to produce and distribute a television mini-series and movie; (2) Tamarak's projected profits; (3) the purported support by the U.S. Air Force for Tamarak's film projects; and (4) purported discussions between Tamarak and major television and film studios.

The Commission is of the opinion that the public interest and the protection of investors require a suspension of trading in securities related to the above-listed company.

Therefore, *it is ordered,* pursuant to Section 12(k) of the Securities Exchange Act of 1934, that trading in all securities, as defined in Section 3(a)(10) of the Securities Exchange Act of 1934, issued by the above-listed company, is suspended for the period from 9:30 a.m. EDST on Monday, August 25, 2003 and terminating at 11:59 p.m. EDST on Monday, September 8, 2003.

By the Commission.

Jonathan G. Katz,

Secretary.

[FR Doc. 03–22026 Filed 8–25–03; 1:30 pm]

BILLING CODE 8010–01–P

SECURITIES AND EXCHANGE COMMISSION

[Release No. 34–48389; File No. SR–MSRB–2003–07]

Self-Regulatory Organizations; Notice of Filing of Proposed Rule Change by the Municipal Securities Rulemaking Board Relating to Proposed Amendments to the MSRB's Telemarketing Rules To Require Participation in the National Do-Not-Call Registry

August 21, 2003.

On August 19, 2003, the Municipal Securities Rulemaking Board (''Board'' or ''MSRB'') filed with the Securities and Exchange Commission (''Commission'' or ''SEC'') a proposed rule change (File No. SR–MSRB–2003–07), pursuant to Section 19(b)(1) of the Securities Exchange Act of 1934 (''Act''),[1] and Rule 19b–4 thereunder.[2] The proposed rule change is described in Items I, II, and III below, which Items have been prepared by the MSRB. The Commission is publishing this notice to solicit comments on the proposed rule change from interested persons.

I. Self-Regulatory Organization's Statement of the Terms of Substance of the Proposed Rule Change

The MSRB is filing herewith a proposed rule change to require brokers, dealers and municipal securities dealers to participate in the Federal Trade Commission's (''FTC's'') national do-not-call registry. The text of the proposed rule change is below. Additions are italicized; deletions are bracketed.

* * * * *

Rule G–39. Telemarketing

[(a) No broker, dealer or municipal securities dealer or person associated with a broker, dealer or municipal securities dealer shall:]

[(i) make outbound telephone calls to the residence of any person for the purpose of soliciting the purchase of municipal securities or related services at any time other than between 8 a.m. and 9 p.m. local time at the called person's location, without the prior consent of the person; or]

[(ii) make an outbound telephone call to any person for the purpose of soliciting the purchase of municipal securities or related services without disclosing promptly and in a clear and conspicuous manner to the called person the following information:]

[(A) the identity of the caller and the firm;]

[(B) the telephone number or address at which the caller may be contacted; and]

[(C) that the purpose of the call is to solicit the purchase of municipal securities or related services.]

[(b) The prohibitions of section (a) shall not apply to telephone calls by any person associated with a broker, dealer or municipal securities dealer, or another associated person acting at the direction of such person for the purpose of maintaining and servicing the accounts of existing customers of the broker, dealer or municipal securities dealer under the control of or assigned to such associated person:]

[(i) to an existing customer who, within the preceding twelve months, has effected a securities transaction in, or made a deposit of funds or securities into, an account that, at the time of the transaction or the deposit, was under the common control of or assigned to, such associated person;]

[(ii) to an existing customer who previously has effected a securities transaction in, or made a deposit of funds or securities into, an account that, at the time of the transaction or deposit, was under the control of or assigned to, such associated person, provided that such customer's account has earned interest or dividend income during the preceding twelve months; or]

[(iii) to a broker, dealer or municipal securities dealer.]

[For the purposes of section (b), the term ''existing customer'' means a customer for whom the broker, dealer or municipal securities dealer, or a clearing broker or dealer on behalf of such broker, dealer or municipal securities dealer, carries an account. The scope of this rule is limited to the telemarketing calls described herein; the terms of this rule shall not otherwise expressly or by implication impose on brokers, dealers or municipal securities dealers any additional requirements with respect to the relationship between a broker, dealer or municipal securities dealer and a customer or between a person associated with a broker, dealer or municipal securities dealer and a customer.]

(a) General Telemarketing Requirements

No broker, dealer or municipal securities dealer or person associated with a broker, dealer or municipal securities dealer shall initiate any telephone solicitation, as defined in paragraph (g)(ii) of this rule, to:

(i) Time of Day Restriction

Any residence of a person before the hour of 8 a.m. or after 9 p.m. (local time at the called party's location), unless

(A) the broker, dealer or municipal securities dealer has an established business relationship with the person pursuant to paragraph (g)(i)(A)(1),

(B) the broker, dealer or municipal securities dealer has received that person's prior express invitation or permission, or

(C) the person called is a broker, dealer or municipal securities dealer;

(ii) Firm-Specific Do-Not-Call List

Any person that previously has stated that he or she does not wish to receive an outbound telephone call made by or on behalf of the broker, dealer or municipal securities dealer; or

(iii) National Do-Not-Call List

Any person who has registered his or her telephone number on the Federal Trade Commission's national do-not-call registry.

(b) National Do-Not-Call List Exceptions

A broker, dealer or municipal securities dealer making telephone solicitations will not be liable for violating paragraph (a)(iii) if:

(i) Established Business Relationship Exception

The broker, dealer or municipal securities dealer has an established business relationship with the recipient of the call. A person's request to be placed on the firm-specific do-not-call list terminates the established business relationship exception to that national do-not-call list provision for that broker, dealer or municipal securities dealer even if the person continues to do business with the broker, dealer or municipal securities dealer;

(ii) Prior Express Written Consent Exception

The broker, dealer or municipal securities dealer has obtained the person's prior express invitation or permission. Such permission must be evidenced by a signed, written agreement between the person and the broker, dealer or municipal securities dealer which states that the person agrees to be contacted by the broker, dealer or municipal securities dealer and includes the telephone number to which the calls may be placed; or

[1] 15 U.S.C. 78s(b)(1).

[2] 17 CFR 240.19b–4.

(iii) Personal Relationship Exception

The associated person making the call has a personal relationship with the recipient of the call.

(c) Safe Harbor Provision

A broker, dealer or municipal securities dealer or person associated with a broker, dealer or municipal securities dealer making telephone solicitations will not be liable for violating paragraph (a)(iii) if the broker, dealer or municipal securities dealer or person associated with a broker, dealer or municipal securities dealer demonstrates that the violation is the result of an error and that as part of the broker, dealer or municipal securities dealer's routine business practice, it meets the following standards:

(i) Written procedures. The broker, dealer or municipal securities dealer has established and implemented written procedures to comply with the national do-not-call rules;

(ii) Training of personnel. The broker, dealer or municipal securities dealer has trained its personnel, and any entity assisting in its compliance, in procedures established pursuant to the national do-not-call rules;

(iii) Recording. The broker, dealer or municipal securities dealer has maintained and recorded a list of telephone numbers that it may not contact; and

(iv) Accessing the national do-not-call database. The broker, dealer or municipal securities dealer uses a process to prevent telephone solicitations to any telephone number on any list established pursuant to the do-not-call rules, employing a version of the national do-not-call registry obtained from the administrator of the registry no more than three months prior to the date any call is made, and maintains records documenting this process.

(d) Procedures

Prior to engaging in telemarketing, a broker, dealer or municipal securities dealer must institute procedures to comply with paragraph (a). Such procedures must meet the following minimum standards:

(i) Written policy. Brokers, dealers and municipal securities dealers must have a written policy for maintaining a do-not-call list.

(ii) Training of personnel engaged in telemarketing. Personnel engaged in any aspect of telemarketing must be informed and trained in the existence and use of the do-not-call list.

(iii) Recording, disclosure of do-not-call requests. If a broker, dealer or municipal securities dealer receives a request from a person not to receive calls from that broker, dealer or municipal securities dealer, the broker, dealer or municipal securities dealer must record the request and place the person's name, if provided, and telephone number on the firm's do-not-call list at the time the request is made. Brokers, dealers and municipal securities dealers must honor a person's do-not-call request within a reasonable time from the date such request is made. This period may not exceed thirty days from the date of such request. If such requests are recorded or maintained by a party other than the broker, dealer or municipal securities dealer on whose behalf the telemarketing call is made, the broker, dealer or municipal securities dealer on whose behalf the telemarketing call is made will be liable for any failures to honor the do-not-call request.

(iv) Identification of sellers and telemarketers. A broker, dealer or municipal securities dealer or person associated with a broker, dealer or municipal securities dealer making a call for telemarketing purposes must provide the called party with the name of the individual caller, the name of the broker, dealer or municipal securities dealer, an address or telephone number at which the broker, dealer or municipal securities dealer may be contacted, and that the purpose of the call is to solicit the purchase of securities or related service. The telephone number provided may not be a 900 number or any other number for which charges exceed local or long distance transmission charges.

(v) Affiliated persons or entities. In the absence of a specific request by the person to the contrary, a person's do-not-call request shall apply to the broker, dealer or municipal securities dealer making the call, and will not apply to affiliated entities unless the consumer reasonably would expect them to be included given the identification of the caller and the product being advertised.

(vi) Maintenance of do-not-call lists. A broker, dealer or municipal securities dealer making calls for telemarketing purposes must maintain a record of a caller's request not to receive further telemarketing calls. A firm-specific do-not-call request must be honored for five years from the time the request is made.

(e) Wireless Communications

The provisions set forth in this rule are applicable to brokers, dealers and municipal securities dealers telemarketing or making telephone solicitations calls to wireless telephone numbers.

(f) Outsourcing Telemarketing

If a broker, dealer or municipal securities dealer uses another entity to perform telemarketing services on its behalf, the broker, dealer or municipal securities dealer remains responsible for ensuring compliance with all provisions contained in this rule.

(g) Definitions

(i) Established business relationship.

(A) An established business relationship exists between a broker, dealer or municipal securities dealer and a person if:

(1) the person has made a financial transaction with the broker, dealer or municipal securities dealer within the previous eighteen months immediately preceding the date of the telemarketing call; or

(2) the person has contacted the broker, dealer or municipal securities dealer to inquire about a product or service offered by the broker, dealer or municipal securities dealer within the previous three months immediately preceding the date of the telemarketing call.

(B) A person's established business relationship with a broker, dealer or municipal securities dealer does not extend to the broker, dealer or municipal securities dealer's affiliated entities unless the person would reasonably expect them to be included. Similarly, a person's established business relationship with a broker, dealer or municipal securities dealer's affiliate does not extend to the broker, dealer or municipal securities dealer unless the person would reasonably expect the broker, dealer or municipal securities dealer to be included.

(ii) The terms telemarketing and telephone solicitation mean the initiation of a telephone call or message for the purpose of encouraging the purchase or rental of, or investment in, property, goods, or services, which is transmitted to any person.

(iii) The term personal relationship means any family member, friend, or acquaintance of the telemarketer making the call.

Rule G–8. Books and Records to be Made by Brokers, Dealers and Municipal Securities Dealers

(a) Description of Books and Records Required to be Made. Except as otherwise specifically indicated in this rule, every broker, dealer and municipal securities dealer shall make and keep current the following books and records, to the extent applicable to the business of such broker, dealer or municipal securities dealer:

(i)–(xviii) No change.

(xix) [Telemarketing Requirements] *Negotiable Instruments Drawn From a Customer's Account*

[(A) Each broker, dealer and municipal securities dealer shall make and maintain a centralized do-not-call list of persons who do not wish to receive telephone solicitations from such broker, dealer or municipal securities dealer or its associated persons.]

[(B)] No broker, dealer or municipal securities dealer or person associated with such broker, dealer or municipal securities dealer shall obtain from a customer or submit for payment a check, draft or other form of negotiable paper drawn on a customer's checking, savings, share, or similar account, without that person's express written authorization, which may include the customer's signature on the negotiable instrument.

(xx)–(xxii) No change.

(b)–(g) No change.

* * * * *

II. Self-Regulatory Organization's Statement of the Purpose of, and Statutory Basis for, the Proposed Rule Change

In its filing with the SEC, the MSRB included statements concerning the purpose of and basis for the proposed rule change and discussed any comments it received on the proposed rule change. The texts of these statements may be examined at the places specified in Item IV below. The MSRB has prepared summaries, set forth in Sections A, B, and C below, of the most significant aspects of such statements.

A. Self-Regulatory Organization's Statement of the Purpose of, and Statutory Basis for, the Proposed Rule Change

1. Purpose

Background

Earlier this year, both the FTC and the Federal Communications Commission (''FCC'') established requirements for sellers and telemarketers to participate in a national do-not-call registry. Beginning in June 2003, consumers have been able to enter their home telephone numbers into the national do-not-call registry, which is maintained by the FTC. Under rules of the FTC and FCC, sellers and telemarketers generally are prohibited from making telephone solicitations to consumers whose numbers are listed in the national do-not-call registry. The FCC's rules are directly applicable to broker/dealers.

The national do-not-call registry is not the FCC's or FTC's first foray into regulating telemarketing. In 1992 and 1995, the FCC and FTC developed requirements for firms to maintain do-not-call lists and to limit the hours of telephone solicitations. The MSRB adopted substantially similar rules in 1996.[3] On July 2, 2003, the SEC requested that the MSRB amend its telemarketing rules to include a requirement for dealers to participate in the national do-not-call registry.[4]

In this proposed rule change, the MSRB is amending its rules to implement the national do-not-call registry. Because broker/dealers and banks are subject to the FCC's jurisdiction, the MSRB modeled its rules after the FCC, with minor modifications tailoring the rules to broker/dealers and the securities industry.[5]

General Telemarketing Requirements

Paragraph (a)(i) of the proposed rule change provides the time-of-day restrictions under which a dealer or person associated with a dealer may make outbound telephone calls to the residence of any person for the purpose of soliciting the purchase of securities or related services. Specifically, dealers may engage in such telephone solicitations only between the hours of 8 a.m. to 9 p.m. (local time at the called party's location) unless the dealer has an established business relationship with the called person based upon a financial transaction with the dealer, the dealer has received express written permission from the person which allows the dealer to call outside the applicable time frame, or the person called is a broker, dealer or municipal securities dealer. These provisions are substantively equivalent to those currently in Rule G–39, except that the MSRB is replacing the current existing customer exception with the established business relationship exception. This change is discussed in detail below.

Paragraph (a)(ii) provides the requirement for firms to maintain a firm-specific do-not-call list.[6] The MSRB originally established the requirement for firms to maintain their own do-not-call lists in 1996. The new federal legislation imposes the additional requirement for firms to consult the national do-not-call registry; it does not eliminate the obligation for firms to maintain their own do-not-call lists. The provisions in paragraph (a)(ii) are substantively equivalent to those in current Rule G–8(a)(xix)(A). Dealers should note that under proposed paragraph (d)(iii), they must honor a request by a person to be placed on a firm-specific do-not-call list within thirty days, or sooner if they are able to do so.

Paragraph (a)(iii) prohibits a dealer or person associated with a dealer from making telephone solicitations to any person who registers his or her phone number on the national do-not-call registry. Dealers should note that such registrations are maintained in the national registry for a period of five years. A consumer may re-register his or her telephone number at any time. This re-registration re-commences the applicable five-year registration.

Exceptions

The rules of the FCC and FTC provide several exceptions under which sellers and telemarketers may make telephone solicitations to persons on the national registry.[7] The MSRB has adopted these exceptions.

The first exception, contained in paragraph (b)(i), is for calls made to persons with whom the dealer has an ''established business relationship.'' An established business relationship may be formed in two ways. First, under paragraph (g)(i)(A)(1), an established business relationship exists between a dealer and a person if such person has made a financial transaction with the dealer within the previous eighteen months immediately preceding the date of the telemarketing call. Second, under paragraph (g)(i)(A)(2), an established business relationship arises if a person has contacted the dealer to inquire about a product or service offered by the

[3] *See* Release No. 34–38053 (Dec. 16, 1996), 61 FR 68078 (Dec. 26, 1996) (approving MSRB rule requiring brokers, dealers and municipal securities dealers (''dealers'') to maintain firm-specific do-not-call lists and creating telemarketing time-of-day restrictions and disclosure provisions).

[4] The Telemarketing and Consumer Fraud and Abuse Prevention Act of 1994 requires the SEC to promulgate telemarketing rules substantially similar to those of the FTC or direct self-regulatory organizations to do so, unless the SEC determines that such rules are not in the interest of investor protection. 47 U.S.C. 6102(d) (2003).

[5] Substantively, the Rules of the FCC and FTC are very similar. Indeed, Congress has asked the FCC to consult with the FTC to maximize consistency between their respective do-not-call rules. *See* The Do-Not-Call Implementation Act, 108 Pub. L. 10, 117 Stat. 557 (Mar. 11, 2003).

[6] MSRB Rule G–8(a)(xix)(A) currently requires firms to maintain firm-specific do-not-call lists. In an effort to consolidate and clarify the MSRB's telemarketing rules, the MSRB is proposing to combine Rule G–8(a)(xix)(A) with its main telemarketing rule, Rule G–39. The remaining section of Rule G–8(a)(xix) is substantively unchanged.

[7] The FTC rule only contains two exceptions: (1) Prior express written consent; and (2) an established business relationship. The FTC rule, unlike the FCC rule, does not include a personal relationship exception.

dealer within the previous three months immediately preceding the date of the telemarketing call.

The definition of established business relationship replaces the definition of ''existing customer,'' which was applicable solely to the time-of-day restriction and disclosure provisions in current Rule G–39. The MSRB believes that requiring dealers to follow separate definitions of existing customer and established business relationship would lead to confusion and inadvertent violations. We note that the proposed definition of ''established business relationship'' is generally broader than the MSRB's definition of existing customer in that it looks back eighteen months rather than twelve months to see whether a consumer made a financial transaction. In addition, an established business relationship may be established by a person inquiring about a product or service from the dealer within the previous three months. The MSRB proposes, however, that time-of-day restrictions should not be waived solely because a person inquired about a product or service within the past three months. Thus, for purposes of the time-of-day restrictions in paragraph (a)(i), an established business relationship must exist based upon a financial transaction as specified in paragraph (g)(i)(A)(1).

In addition, for purposes of paragraph (g)(i)(A)(1), the MSRB proposes interpreting the term ''financial transaction'' to mean that a person has effected a securities transaction or deposited funds or securities with the broker, dealer or municipal securities dealer. The MSRB does not believe that under the FCC's or FTC's definitions of established business relationship,[8] the receipt of interest or dividends would constitute a financial transaction. We note that this is a distinction from current Rule G–39(b)(ii), under which a person could be an existing customer solely on the basis of interest or dividend income. However, because dealers are subject to FCC rules, we have sought to harmonize MSRB standards with those of the FCC. We also believe that consumers generally would not view receiving interest or dividends as sufficient to overcome their expectation that entering their telephone number in the national do-not-call registry will curtail telephone solicitations.

A person's request to be placed on a firm-specific do-not-call list terminates the established business relationship exception. Thus, a dealer or person associated with a dealer may not make telephone solicitations to a person with whom it has an established business relationship if such person requests to be placed on the dealer's do-not-call list. This is consistent with the MSRB's current do-not-call provisions, which do not contain any exemption for existing customers. Nothing in this section prohibits a dealer from contacting a customer concerning the administration of his or her account. Such calls are not telephone solicitation or telemarketing and are not precluded under existing MSRB rules or the proposed rule change.

The second exception to the national do-not-call rules, contained in paragraph (b)(ii), is for calls to persons from whom the dealer has obtained prior express invitation or permission. In accordance with the requirements of the FCC and FTC, permission must be evidenced by a signed, written agreement between the dealer and person that specifically states that the person agrees to be contacted by the dealer. The agreement also must include the telephone number to which calls may be placed.

The third exception, in paragraph (b)(iii), is for calls made by an associated person who has a personal relationship with the recipient. The definition of personal relationship is in paragraph (g)(iii) and means ''any family member, friend, or acquaintance of the telemarketer making the call.'' The FCC has indicated that in determining whether a telemarketer is a friend or acquaintance of the consumer, the FCC will look at, among other things, whether a reasonable consumer would expect a call from such persons because they have a close, or, at least, a firsthand relationship. Dealers and persons associated with a dealer also should be aware that this exception applies solely to the national do-not-call registry. Thus, if a person with whom an associated person has a personal relationship has requested to be placed on a firm's do-not-call list, the associated person may not make a telephone solicitation to such person.

Safe Harbor Provision

The FCC and FTC rules also contain a ''safe harbor'' under which a person will not be liable for a violation that is the result of error if the telemarketer's routine business practice meets certain specified standards. The safe harbor is established in paragraph (c) and applies only to a violation of paragraph (a)(iii), the national do-not-call registry provision. To be eligible for this safe harbor, a dealer or person associated with a dealer must demonstrate that the dealer's routine business practice meets the following four standards. First, the dealer has established and implemented written procedures to comply with the national do-not-call rules. Second, the dealer has trained its personnel, and any entity assisting in its compliance, in procedures established pursuant to the national do-not-call rules. Third, the dealer has maintained and recorded a list of telephone numbers that the dealer may not contact. Fourth, the dealer uses a process to prevent telephone solicitations to any telephone number on any list established pursuant to the do-not-call rules, employing a version of the national do-not-call registry obtained from the FTC no more than three months prior to the date any call is made, and maintains records documenting this process.[9]

Telemarketing Procedures

Paragraph (d) tracks the requirements of the FCC rule and existing Rule G–39 in establishing procedures that dealer firms must institute prior to engaging in telemarketing. These procedures include requirements to: (1) Have a written policy for maintaining a do-not-call list; (2) train personnel engaged in

[8] The FCC's definition of established business relationship requires a person's ''purchase or transaction with the entity.'' FCC Report 03–153 (July 3, 2003). The FTC's definition is substantially similar and states that the established business relationship may be formed by the consumer's purchase, rental, or lease of the seller's goods or services or a financial transaction between the consumer and seller. 68 FR 4580, 4669 (Jan. 29, 2003).

[9] We note that under the rules of the FCC, the safe harbor contains an additional requirement that a seller or telemarketer use a process to ensure that it does not sell, rent, lease, purchase or use the national do-not-call database, or any part thereof, for any purpose except compliance with the FCC's national do-not-call rules and any such state or federal law to prevent telephone solicitations to telephone numbers registered on the national database. The telemarketer also must purchase access to the relevant do-not-call data from the administrator of the national database and must not participate in any arrangement to share the cost of accessing the national database, including any arrangement with other entities to divide the costs to access the national database among various client sellers.

The FTC will collect fees from sellers and telemarketers to fund the ongoing expenses of the national registry. The annual cost of accessing the FTC's national registry has been set at $25 per area code, with a maximum annual cap of $7,375 (equivalent to 300 area codes). *See* 68 FR 45134, 45141 (July 31, 2003). In addition, as part of the FTC's Regulatory Flexibility analysis on the burdens to small entities, the FTC determined that it would not charge an access fee for the first five area codes.

Although the MSRB's proposed safe harbor does not contain provisions concerning the sale, rent, lease, purchase, use, or means of accessing the national do-not-call registry as such matters generally fall outside the purview of the investor protection concerns underlying the proposed rule change, dealers are subject to the FCC's national do-not-call rules and must nevertheless comply with these provisions or risk administrative action by the FCC.

telemarketing in the existence and use of the do-not-call list; (3) record and disclose requests from a person to be added to the dealer's do-not-call list; and (4) have the dealer provide the called party with the name of the individual caller, the name of the dealer, a telephone number or address at which the dealer may be contacted, and that the purpose of the call is to solicit the purchase of securities or related services.

Paragraph (d)(v) contains the FCC's position with respect to affiliated persons or entities. In general, a person's do-not-call request applies only to the entity making the call, and does not apply to any affiliated entity unless the customer reasonably would expect the affiliated entity to be included given the identification of the caller and the product being advertised. Similarly, the established business relationship exception does not extend to the dealer's affiliated entities unless the customer reasonably would expect the dealer to be included.

Paragraph (d)(vi) explains that dealers must maintain a record of a caller's request not to receive further telemarketing calls and must honor that request for a period of five years.

Miscellaneous Provisions

Paragraph (e) tracks the FCC's position with respect to the application of the proposed rule change to wireless telephone numbers. In general, the FCC has stated that wireless subscribers may participate in the national do-not-call registry. Although FCC telemarketing rules only generally apply to residential telephone subscribers, the FCC has stated that it will presume wireless subscribers who ask to be put on the national do-not-call list are residential subscribers. Such a presumption, however, may require a complaining wireless customer to provide further proof of the validity of that presumption should it need to take enforcement action. The MSRB agrees with this interpretation and, consistent with the FCC, will apply its telemarketing provisions to dealers engaging in telephone solicitations with wireless subscribers.

Paragraph (f) provides that, if a dealer uses another entity to perform telemarketing services on its behalf, the dealer remains responsible for ensuring compliance with all provisions contained in this proposed rule. Dealers also should be mindful of the limitations on the use of unregistered persons to perform telemarketing services.

2. Basis

The MSRB believes the proposed rule change is consistent with section 15B(b)(2)(C) of the Act, which provides that the Board's rules shall:

> Be designed to prevent fraudulent and manipulative acts and practices, to promote just and equitable principles of trade* * *to remove impediments to and perfect the mechanism of a free and open market in municipal securities, and, in general, to protect investors and the public interest.

The MSRB believes that the proposed rule change is consistent with the Act in that investors will expect that their participation in the national do-not-call registry will, subject to certain limited exceptions, preclude telephone solicitations by broker/dealers.

B. Self-Regulatory Organization's Statement on Burden on Competition

The MSRB does not believe that the proposed rule change would impose any burden on competition not necessary or appropriate in furtherance of the purposes of the Act, since it would apply equally to all brokers, dealers and municipal securities dealers.

C. Self-Regulatory Organization's Statement on Comments on the Proposed Rule Change Received From Members, Participants, or Others

Comments were neither solicited nor received.

III. Date of Effectiveness of the Proposed Rule Change and Timing for Commission Action

Within 35 days of the date of publication of this notice in the **Federal Register** or within such longer period (i) as the Commission may designate up to 90 days of such date if it finds such longer period to be appropriate and publishes its reasons for so finding, or (ii) as to which the self-regulatory organization consents, the Commission will:

(A) By order approve such proposed rule change, or

(B) Institute proceedings to determine whether the proposed rule change should be disapproved.

IV. Solicitation of Comments

Interested persons are invited to submit written data, views, and arguments concerning the foregoing, including whether the proposed rule change is consistent with the Act. Persons making written submissions should file six copies thereof with the Secretary, Securities and Exchange Commission, 450 Fifth Street, NW., Washington, DC 20549–0609. Copies of the submissions, all subsequent amendments, all written statements with respect to the proposed rule change that are filed with the Commission, and all written communications relating to the proposed rule change between the Commission and any person, other than those that may be withheld from the public in accordance with the provisions of 5 U.S.C. 552, will be available for inspection and copying in the Commission's Public Reference Room. Copies of the filing will also be available for inspection and copying at the Board's principal offices. All submissions should refer to File No. SR–MSRB–2003–07 and should be submitted by September 17, 2003.

For the Commission, by the Division of Market Regulation, pursuant to delegated authority.[10]

Margaret H. McFarland,

Deputy Secretary.

[FR Doc. 03–21940 Filed 8–26–03; 8:45 am]

BILLING CODE 8010–01–P

SECURITIES AND EXCHANGE COMMISSION

[Release No. 34–48390; File No. SR–NASD–2003–131]

Self-Regulatory Organizations; Notice of Filing of Proposed Rule Change by National Association of Securities Dealers, Inc. Relating to Proposed Amendments to NASD's Telemarketing Rules To Require Members To Participate in the National Do-Not-Call Registry

August 21, 2003.

Pursuant to Section 19(b)(1) of the Securities Exchange Act of 1934 (''Act'')[1] and Rule 19b-4 thereunder,[2] notice is hereby given that on August 15, 2003, the National Association of Securities Dealers, Inc. (''NASD''), filed with the Securities and Exchange Commission (''SEC'' or ''Commission'') the proposed rule change as described in Items I, II, and III below, which Items have been prepared by NASD. The Commission is publishing this notice to solicit comments on the proposed rule change from interested persons.

I. Self-Regulatory Organization's Statement of the Terms of Substance of the Proposed Rule Change

NASD is filing with the Commission a proposed rule change to require members to participate in the Federal Trade Commission's (''FTC'') national

[10] 17 CFR 200.30–3(a)(12).

[1] 15 U.S.C. 78s(b)(1).

[2] 17 CFR 240.19b-4.

do-not-call registry. Proposed new language is italicized; proposed deletions are in brackets.

* * * * *

2200. COMMUNICATIONS WITH THE PUBLIC

* * * * *

2211. Telemarketing

[No member or person associated with a member shall:]

[(a) make outbound telephone calls to the residence of any person for the purpose of soliciting the purchase of securities or related services at any time other than between 8 a.m. and 9 p.m. local time at the called person's location, without the prior consent of the person; or]

[(b) make an outbound telephone call to any person for the purpose of soliciting the purchase of securities or related services without disclosing promptly and in a clear and conspicuous manner to the called person the following information:]

[(1) the identity of the caller and the member firm;]

[(2) the telephone number or address at which the caller may be contacted; and]

[(3) that the purpose of the call is to solicit the purchase of securities or related services.]

[(c) The prohibitions of paragraphs (a) and (b) shall not apply to telephone calls by any person associated with a member, or another associated person acting at the direction of such person for the purpose of maintaining and servicing the accounts of existing customers of the member under the control of or assigned to such associated person:]

[(1) to an existing customer who, within the preceding twelve months, has effected a securities transaction in, or made a deposit of funds or securities into, an account that, at the time of the transaction or the deposit, was under the control of or assigned to, such associated person;]

[(2) to an existing customer who previously has effected a securities transaction in, or made a deposit of funds or securities into, an account that, at the time of the transaction or deposit, was under the control of or assigned to, such associated person, provided that such customer's account has earned interest or dividend income during the preceding twelve months, or]

[(3) to a broker or dealer.]

[(d) For the purposes of paragraph (c), the term ''existing customer '' means a customer for whom the broker or dealer, or a clearing broker or dealer on behalf of such broker or dealer, carries an account. The scope of this Rule is limited to the telemarketing calls described herein; the terms of this Rule shall not otherwise expressly or by implication impose on members any additional requirements with respect to the relationship between a member and a customer or between a person associated with a member and a customer.]

(a) General Telemarketing Requirements

No member or person associated with a member shall initiate any telephone solicitation, as defined in paragraph (g)(2) of this rule, to:

(1) Time of Day Restriction

Any residence of a person before the hour of 8 a.m. or after 9 p.m. (local time at the called party's location), unless

(A) the member has an established business relationship with the person pursuant to paragraph (g)(1)(A)(i),

(B) the member has received that person's prior express invitation or permission, or

(C) the person called is a broker or dealer;

(2) Firm-Specific Do-Not-Call List

Any person that previously has stated that he or she does not wish to receive an outbound telephone call made by or on behalf of the member; or

(3) National Do-Not-Call List

Any person who has registered his or her telephone number on the Federal Trade Commission's national do-not-call registry.

(b) National Do-Not-Call List Exceptions

A member making telephone solicitations will not be liable for violating paragraph (a)(3) if:

(1) Established Business Relationship Exception

The member has an established business relationship with the recipient of the call. A person's request to be placed on the firm-specific do-not-call list terminates the established business relationship exception to that national do-not-call list provision for that member even if the person continues to do business with the member;

(2) Prior Express Written Consent Exception

The member has obtained the person's prior express invitation or permission. Such permission must be evidenced by a signed, written agreement between the person and member which states that the person agrees to be contacted by the member and includes the telephone number to which the calls may be placed; or

(3) Personal Relationship Exception

The associated person making the call has a personal relationship with the recipient of the call.

(c) Safe Harbor Provision

A member or person associated with a member making telephone solicitations will not be liable for violating paragraph (a)(3) if the member or person associated with a member demonstrates that the violation is the result of an error and that as part of the member's routine business practice, it meets the following standards:

(1) Written procedures. The member has established and implemented written procedures to comply with the national do-not-call rules;

(2) Training of personnel. The member has trained its personnel, and any entity assisting in its compliance, in procedures established pursuant to the national do-not-call rules;

(3) Recording. The member has maintained and recorded a list of telephone numbers that it may not contact; and

(4) Accessing the national do-not-call database. The member uses a process to prevent telephone solicitations to any telephone number on any list established pursuant to the do-not-call rules, employing a version of the national do-not-call registry obtained from the administrator of the registry no more than three months prior to the date any call is made, and maintains records documenting this process.

(d) Procedures

Prior to engaging in telemarketing, a member must institute procedures to comply with paragraph (a). Such procedures must meet the following minimum standards:

(1) Written policy. Members must have a written policy for maintaining a do-not-call list.

(2) Training of personnel engaged in telemarketing. Personnel engaged in any aspect of telemarketing must be informed and trained in the existence and use of the do-not-call list.

(3) Recording, disclosure of do-not-call requests. If a member receives a request from a person not to receive calls from that member, the member must record the request and place the person's name, if provided, and telephone number on the firm's do-not-call list at the time the request is made. Members must honor a person's do-not-call request within a reasonable time from the date such request is made. This period may not exceed thirty days from the date of such request. If such requests are recorded or maintained by a party

other than the member on whose behalf the telemarketing call is made, the member on whose behalf the telemarketing call is made will be liable for any failures to honor the do-not-call request.

(4) Identification of sellers and telemarketers. A member or person associated with a member making a call for telemarketing purposes must provide the called party with the name of the individual caller, the name of the member, an address or telephone number at which the member may be contacted, and that the purpose of the call is to solicit the purchase of securities or related service. The telephone number provided may not be a 900 number or any other number for which charges exceed local or long distance transmission charges.

(5) Affiliated persons or entities. In the absence of a specific request by the person to the contrary, a person's do-not-call request shall apply to the member making the call, and will not apply to affiliated entities unless the consumer reasonably would expect them to be included given the identification of the caller and the product being advertised.

(6) Maintenance of do-not-call lists. A member making calls for telemarketing purposes must maintain a record of a caller's request not to receive further telemarketing calls. A firm-specific do-not-call request must be honored for 5 years from the time the request is made.

(e) Wireless Communications

The provisions set forth in this rule are applicable to members telemarketing or making telephone solicitations calls to wireless telephone numbers.

(f) Outsourcing Telemarketing

If a member uses another entity to perform telemarketing services on its behalf, the member remains responsible for ensuring compliance with all provisions contained in this rule.

(g) Definitions

(1) Established business relationship.

(A) An established business relationship exists between a member and a person if:

(i) The person has made a financial transaction with the member within the previous 18 months immediately preceding the date of the telemarketing call; or

(ii) The person has contacted the member to inquire about a product or service offered by the member within the previous three months immediately preceding the date of the telemarketing call.

(B) A person's established business relationship with a member does not extend to the member's affiliated entities unless the person would reasonably expect them to be included. Similarly, a person's established business relationship with a member's affiliate does not extend to the member unless the person would reasonably expect the member to be included.

(2) The terms telemarketing and telephone solicitation mean the initiation of a telephone call or message for the purpose of encouraging the purchase or rental of, or investment in, property, goods, or services, which is transmitted to any person.

(3) The term personal relationship means any family member, friend, or acquaintance of the telemarketer making the call.

* * * * *

Self-Regulatory Organization's Statement of the Purpose of, and Statutory Basis for, the Proposed Rule Change

In its filing with the Commission, NASD included statements concerning the purpose of and basis for the proposed rule change and discussed any comments it received on the proposed rule change. The text of these statements may be examined at the places specified in Item IV below. NASD has prepared summaries, set forth in Sections (A), (B), and (C) below, of the most significant aspects of such statements.

(A) Self-Regulatory Organization's Statement of the Purpose of, and Statutory Basis for, the Proposed Rule Change

1. Purpose

Background

Earlier this year, both the FTC and the Federal Communications Commission (''FCC'') established requirements for sellers and telemarketers to participate in a national do-not-call registry. Beginning in June 2003, consumers have been able to enter their home telephone numbers into the national do-not-call registry, which is maintained by the FTC. Under rules of the FTC and FCC, sellers and telemarketers generally are prohibited from making telephone solicitations to consumers whose numbers are listed in the national do-not-call registry. The FCC's rules are directly applicable to broker/dealers.

The national do-not-call registry is not the FCC's or FTC's first foray into regulating telemarketing. In 1992 and 1995, the FCC and FTC developed requirements for firms to maintain do-not-call lists and to limit the hours of telephone solicitations. NASD adopted substantially similar rules in 1995 and 1996.[3] On July 2, 2003, the SEC requested that NASD amend its telemarketing rules to include a requirement for its members to participate in the national do-not-call registry.[4]

In this proposed rule change, NASD is amending its rules to implement the national do-not-call registry. Because broker/dealers and banks are subject to the FCC's jurisdiction, the NASD modeled its rules after the FCC, with minor modifications tailoring the rules to broker/dealers and the securities industry.[5]

General Telemarketing Requirements

Paragraph (a)(1) of the proposed rule change provides the time-of-day restrictions under which a member or person associated with a member may make outbound telephone calls to the residence of any person for the purpose of soliciting the purchase of securities or related services. Specifically, members may engage in such telephone solicitations only between the hours of 8 a.m. to 9 p.m. (local time at the called party's location) unless the member has an established business relationship with the called person based upon a financial transaction with the member, the member has received express written permission from the person which allows the member to call outside the applicable time frame, or the person called is a broker or dealer. These provisions are substantively equivalent to those currently in Rule 2211, except that NASD is replacing the current existing customer exception with the established business relationship exception. This change is discussed in detail below.

Paragraph (a)(2) provides the requirement for firms to maintain a firm-specific do-not-call list.[6] NASD

[3] *See* 60 FR 31527 (June 15, 1995) (approving NASD rule requiring members to maintain firm-specific do-not-call lists); 61 FR 65625 (Dec. 13, 1996) (approving NASD rule creating telemarketing time-of-day restrictions and disclosure provisions).

[4] The Telemarketing and Consumer Fraud and Abuse Prevention Act of 1994 requires the SEC to promulgate telemarketing rules substantially similar to those of the FTC or direct self-regulatory organizations to do so, unless the SEC determines that such rules are not in the interest of investor protection. 47 U.S.C. 6102(d) (2003).

[5] Substantively, the Rules of the FCC and FTC are very similar. Indeed, Congress has asked the FCC to consult with the FTC to maximize consistency between their respective do-not-call rules. *See* The Do-Not-Call Implementation Act, 108 Pub. L. 10, 117 Stat. 557 (Mar. 11, 2003).

[6] NASD Rule 3110(g)(1) currently requires firms to maintain firm-specific do-not-call lists. In an effort to consolidate and clarify NASD's telemarketing rules, NASD is proposing to combine Rule 3110(g)(1) with its main telemarketing rule,

Continued

originally established the requirement for firms to maintain their own do-not-call lists in 1995. The new federal legislation imposes the additional requirement for firms to consult the national do-not call registry; it does not eliminate the obligation for firms to maintain their own do-not-call lists. The provisions in paragraph (a)(2) are substantively equivalent to those in current Rule 3110(g)(1). Members should note that under proposed paragraph (d)(3), they must honor a request by a person to be placed on a firm-specific do-not-call list within thirty days, or sooner if they are able to do so.

Paragraph (a)(3) prohibits a member or person or associated with a member from making telephone solicitations to any person who registers his or her phone number on the national do-not-call registry. Members should note that such registrations are maintained in the national registry for a period of five years. A consumer may re-register his or her telephone number at any time. This re-registration re-commences the applicable five-year registration.

Exceptions

The rules of the FCC and FTC provide several exceptions under which sellers and telemarketers may make telephone solicitations to persons on the national registry.[7] NASD has adopted these exceptions.

The first exception, contained in paragraph (b)(1), is for calls made to persons with whom the member has an ''established business relationship.'' An ''established business relationship may be formed in two ways. First, under paragraph (g)(1)(A)(i), an established business relationship exists between a member and a person if such person has made a financial transaction with the member within the previous 18 months immediately preceding the date of the telemarketing call. Second, under paragraph (g)(1)(A)(ii), an established business relationship arises if a person has contacted the member to inquire about a product or service offered by the member within the previous three months immediately preceding the date of the telemarketing call.

The definition of established business relationship replaces the definition of ''existing customer,'' which was applicable solely to the time-of-day restriction and disclosure provisions in current Rule 2211. NASD believes that requiring members to follow separate definitions of existing customer and established business relationship would lead to confusion and inadvertent violations. We note that the proposed definition of ''established business relationship'' is generally broader than the NASD's definition of existing customer in that it looks back 18 months rather than 12 months to see if a consumer made a financial transaction. In addition, an established business relationship may be established by a person inquiring about a product or service from the member within the previous three months. NASD proposes, however, that time-of-day restrictions should not be waived solely because a person inquired about a product or service within the past three months. Thus, for purposes of the time-of-day restrictions in paragraph (a)(1), an established business relationship must exist based upon a financial transaction as specified in paragraph (g)(1)(A)(i).

In addition, for purposes of paragraph (g)(1)(A)(i), NASD proposes interpreting the term ''financial transaction'' to mean that a person has effected a securities transaction or deposited funds or securities with the member. NASD does not believe that under the FCC's or FTC's definitions of established business relationship,[8] the receipt of interest or dividends would constitute a financial transaction. We note that this is a distinction from current Rule 2211(c)(2), under which a person could be an existing customer solely on the basis of interest or dividend income. However, because members are subject to FCC rules, we have sought to harmonize NASD standards with those of the FCC. We also believe that consumers generally would not view receiving interest or dividends as sufficient to overcome their expectation that entering their telephone number in the national do-not-call registry will curtail telephone solicitations.

A person's request to be placed on a firm-specific do-not-call list terminates the established business relationship exception. Thus, a member or person associated with a member may not make telephone solicitations to a person with whom it has an established business relationship if such person requests to be placed on the member's do-not-call list. This is consistent with NASD's current do-not-call provisions, which do not contain any exemption for existing customers. Nothing in this section prohibits a member from contacting a customer concerning the administration of his or her account. Such calls are not telephone solicitation or telemarketing and are not precluded under existing NASD rules or the proposed rule change.

The second exception to the national do-not-call rules, contained in paragraph (b)(2), is for calls to persons from whom the member has obtained prior express invitation or permission. In accordance with the requirements of the FCC and FTC, permission must be evidenced by a signed, written agreement between the member and person that specifically states that the person agrees to be contacted by the member. The agreement also must include the telephone number to which calls may be placed.

The third exception, in paragraph (b)(3), is for calls made by an associated person who has a personal relationship with the recipient. The definition of personal relationship is in paragraph (g)(3) and means ''any family member, friend, or acquaintance of the telemarketer making the call.'' The FCC has indicated that in determining whether a telemarketer is a friend or acquaintance of the consumer, the FCC will look at, among other things, whether a reasonable consumer would expect a call from such persons because they have a close, or, at least, a firsthand relationship. Members and persons associated with a member also should be aware that this exception applies solely to the national do-not-call registry. Thus, if a person with whom an associated person has a personal relationship has requested to be placed on a firm's do-not-call list, the associated person may not make a telephone solicitation to such person.

Safe Harbor Provision

The FCC and FTC rules also contain a ''safe harbor'' under which a person will not be liable for a violation that is the result of error if the telemarketer's routine business practice meets certain specified standards. The safe harbor is established in paragraph (c) and applies only to a violation of paragraph (a)(3), the national do-not-call registry provision. To be eligible for this safe harbor, a member or person associated with a member must demonstrate that the member's routine business practice meets the following four standards. First, the member has established and implemented written procedures to comply with the national do-not-call

Rule 2211. The remaining sections of Rule 3110 are substantively unchanged.

[7] The FTC rule only contains two exceptions: (1) prior express written consent; and (2) an established business relationship. The FTC rule, unlike the FCC rule, does not include a personal relationship exception.

[8] The FCC's definition of established business relationship requires a person's ''purchase or transaction with the entity.'' FCC Report 03–153 (July 3, 2003). The FTC's definition is substantially similar and states that the established business relationship may be formed by the consumer's purchase, rental, or lease of the seller's goods or services or a financial transaction between the consumer and seller. 68 FR 4580, 4669 (Jan. 29, 2003).

rules. Second, the member has trained its personnel, and any entity assisting in its compliance, in procedures established pursuant to the national do-not-call rules. Third, the member has maintained and recorded a list of telephone numbers that the member may not contact. Fourth, the member uses a process to prevent telephone solicitations to any telephone number on any list established pursuant to the do-not-call rules, employing a version of the national do-not-call registry obtained from the FTC no more than three months prior to the date any call is made, and maintains records documenting this process.[9]

Telemarketing Procedures

Paragraph (d) tracks the requirements of the FCC rule and existing Rule 2211 in establishing procedures that member firms must institute prior to engaging in telemarketing. These procedures include requirements to: (1) Have a written policy for maintaining a do-not-call list; (2) train personnel engaged in telemarketing in the existence and use of the do-not-call list; (3) record and disclose requests from a person to be added to the member's do-not-call list; and (4) have the member provide the called party with the name of the individual caller, the name of the member, a telephone number or address at which the member may be contacted, and that the purpose of the call is to solicit the purchase of securities or related services.

Paragraph (d)(5) contains the FCC's position with respect to affiliated persons or entities. In general, a person's do-not-call request applies only to the entity making the call, and does not apply to any affiliated entity unless the customer reasonably would expect the affiliated entity to be included given the identification of the caller and the product being advertised. Similarly, the established business relationship exception does not extend to the member's affiliated entities unless the customer reasonably would expect the member to be included.

Paragraph (d)(6) explains that members must maintain a record of a caller's request not to receive further telemarketing calls and must honor that request for a period of five years.

Miscellaneous Provisions

Paragraph (e) tracks the FCC's position with respect to the application of the proposed rule change to wireless telephone numbers. In general, the FCC has stated that wireless subscribers may participate in the national do-not-call registry. Although FCC telemarketing rules only generally apply to residential telephone subscribers, the FCC has stated that it will presume wireless subscribers who ask to be put on the national do-not-call list are residential subscribers. Such a presumption, however, may require a complaining wireless customer to provide further proof of the validity of that presumption should it need to take enforcement action. NASD agrees with this interpretation and, consistent with the FCC, will apply its telemarketing provisions to members engaging in telephone solicitations with wireless subscribers.

Paragraph (f) provides that if a member uses another entity to perform telemarketing services on its behalf, the member remains responsible for ensuring compliance with all provisions contained in this proposed rule. Members also should be mindful of the limitations on the use of unregistered persons to perform telemarketing services. In *NASD Notice to Members* 00–50 (Aug. 2000), NASD identified the limited telemarketing activities that can be performed by unregistered persons. Under this *Notice*, unregistered persons may only contact prospective customers to: (1) Extend invitations to firm-sponsored events; (2) inquire whether the customer wishes to discuss investments with a registered person; and (3) inquire whether the customer wishes to receive investment literature. Members must also be mindful of the supervision and training requirements contained in the *Notice.*

2. Basis

NASD believes that the proposed rule change is consistent with the provisions of Section 15A(b)(6) of the Act, which requires, among other things, that NASD's rules must be designed to prevent fraudulent and manipulative acts and practices, to promote just and equitable principles of trade, and, in general, to protect investors and the public interest. NASD believes that investors will expect that their participation in the national do-not-call registry will, subject to certain limited exceptions, preclude telephone solicitations by broker/dealers.

(B) Self-Regulatory Organization's Statement on Burden on Competition

NASD does not believe that the proposed rule change will result in any burden on competition that is not necessary or appropriate in furtherance of the purposes of the Act, as amended.

(C) Self-Regulatory Organization's Statement on Comments on the Proposed Rule Change Received From Members, Participants, or Others

Comments were neither solicited nor received.

III. Date of Effectiveness of the Proposed Rule Change and Timing for Commission Action

Within 35 days of the date of publication of this notice in the **Federal Register** or within such longer period (i) as the Commission may designate up to 90 days of such date if it finds such longer period to be appropriate and publishes its reasons for so finding or (ii) as to which the self-regulatory organization consents, the Commission will:

A. By order approve such proposed rule change, or

B. Institute proceedings to determine whether the proposed rule change should be disapproved.

IV. Solicitation of Comments

Interested persons are invited to submit written data, views, and arguments concerning the foregoing, including whether the proposed rule change is consistent with the act. Persons making written submissions should file six copies thereof with the Secretary, Securities and Exchange Commission, 450 Fifth Street, NW, Washington, DC 20549–0609. Copies of the submission, all subsequent amendments, all written statements with respect to the proposed rule change that are filed with the

[9] We note that under the rules of the FCC, the safe harbor contains an additional requirement that a seller or telemarketer use a process to ensure that it does not sell, rent, lease, purchase or use the national do-not-call database, or any part thereof, for any purpose except compliance with the FCC's national do-not-call rules and any such state or federal law to prevent telephone solicitations to telephone numbers registered on the national database. The telemarketer also must purchase access to the relevant do-not-call data from the administrator of the national database and must not participate in any arrangement to share the cost of accessing the national database, including any arrangement with other entities to divide the costs to access the national database among various client sellers.

The FTC will collect fees from sellers and telemarketers to fund the ongoing expenses of the national registry. The annual cost of accessing the FTC's national registry has been set at $25 per area code, with a maximum annual cap of $7,375 (equivalent to 300 area codes). *See* 68 FR 45134, 45141 (July 31, 2003). In addition, as part of the FTC's Regulatory Flexibility analysis on the burdens to small entities, the FTC determined that it would not charge an access fee for the first five area codes.

Although NASD's proposed safe harbor does not contain provisions concerning the sale, rent, lease, purchase, use, or means of accessing the national do-not-call registry as such matters generally fall outside the purview of the investor protection concerns underlying the proposed rule change, members are subject to the FCC's national do-not-call rules and must nevertheless comply with these provisions or risk administrative action by the FCC.

Commission, and all written communications relating to the proposed rule change between the Commission and any person, other than those that may be withheld from the public in accordance with the provisions of 5 U.S.C. 552, will be available for inspection and copying in the Commission's Public Reference Room. Copies of such filing will also be available for inspection and copying at the principal office of NASD. All submissions should refer to File No. SR–NASD–2003–131 and should be submitted by September 17, 2003.

For the Commission, by the Division of Market Regulation, pursuant to delegated authority.[10]

Margaret H. McFarland,

Deputy Secretary.

[FR Doc. 03–21941 Filed 8–26–03; 8:45 am]

BILLING CODE 8010–01–P

[10] 17 CFR 200.30–3(a)(12).

SECURITIES AND EXCHANGE COMMISSION

[Release No. 34–48386; File No. SR–NASD–2003–132]

Self-Regulatory Organizations; Notice of Filing and Immediate Effectiveness of Proposed Rule Change by the National Association of Securities Dealers, Inc. To Extend the Pilot Period for Fees for the National Quotation Data Service

August 21, 2003.

Pursuant to Section 19(b)(1) of the Securities Exchange Act of 1934 (''Act''),[1] and Rule 19b–4 thereunder,[2] notice is hereby given that on August 18, 2003, the National Association of Securities Dealers, Inc. (''NASD''), through its subsidiary, The Nasdaq Stock Market, Inc. (''Nasdaq''), filed with the Securities and Exchange Commission (''Commission'') the proposed rule change as described in Items I and II below, which Items have been prepared by Nasdaq. Nasdaq filed the proposal pursuant to Section 19(b)(3)(A) of the Act,[3] and Rule 19b–4(f)(6) thereunder,[4] which renders the proposal effective upon filing with the Commission.[5] The Commission is publishing this notice to solicit comments on the proposed rule change from interested persons.

[1] 15 U.S.C. 78s(b)(1).

[2] 17 CFR 240.19b–4.

[3] 15 U.S.C. 78s(b)(3)(A).

[4] 17 CFR 240.19b–4(f)(6).

[5] Nasdaq asked the Commission to waive the five-day pre-filing notice requirement and the 30-day operative day. *See* Rule 19b–4(f)(6)(iii). 17 CFR 240.19b–4(f)(6)(iii).

I. Self-Regulatory Organization's Statement of the Terms of Substance of the Proposed Rule Change

Nasdaq proposes to extend a one-year pilot program under NASD Rule 7010(h), which reduced from $50 to $10 the monthly fee that non-professional users pay to receive the National Quotation Data Service (''NQDS'').[6] The purpose of this proposed rule change is to extend the one-year fee reduction pilot program for non-professional users of NQDS through August 31, 2004. Nasdaq proposes no other changes to the pilot as it is currently operating. Accordingly, there is no new proposed rule language.

II. Self-Regulatory Organization's Statement of the Purpose of, and Statutory Basis for, the Proposed Rule Change

In its filing with the Commission, the NASD included statements concerning the purpose of and basis for the proposed rule change and discussed any comments it received on the proposed rule change. The text of these statements may be examined at the places specified in Item IV below. The NASD has prepared summaries, set forth in Sections A, B, and C below, of the most significant aspects of such statements.

A. Self-Regulatory Organization's Statement of the Purpose of, and Statutory Basis for, the Proposed Rule Change

1. Purpose

Nasdaq is proposing to extend for one year the fee reduction pilot program under NASD Rule 7010(h) that reduced from $50 to $10 the monthly fee that non-professional users pay to receive NQDS.

NQDS delivers market maker quotations, Nasdaq Level 1[7] service (including calculation and display of the inside market), and last sale information that is dynamically updated on a real-time basis. NQDS data is used not only by firms, associated persons, and other market professionals, but also by non-professionals who receive the service through authorized vendors, including, for example, on-line brokerage firms. Prior to August 31, 2000, NQDS data was available through authorized vendors at a monthly rate of $50 for professionals and non-professional users alike. In August 2000, the NASD through Nasdaq filed a rule change to reduce from $50 to $10 the monthly fee that non-professional users pay to receive NQDS data. The Commission approved the pilot on August 22, 2000, and the fee reduction commenced on August 31, 2000 on a one-year pilot basis. On September 4, 2001, and again on August 29, 2002, Nasdaq filed proposed rule changes to extend the pilot for another one-year period.

Nasdaq has consistently supported broad, effective dissemination of market information to public investors. Thus, Nasdaq is proposing to extend the one-year fee-reduction pilot for another year. The pilot would cover twelve months, commencing with September 2003 and expiring on August 31, 2004. Nasdaq notes that the existing pilot reduced by 80% the fees that non-professionals paid for NQDS data prior to August 31, 2000. Continuing the reduction of NQDS charges for non-professional users demonstrates Nasdaq's continued commitment to individual investors and responds to the dramatic increase in the demand for real-time market data by non-professional market participants. In addition, NASD member firms often supply real-time market data to their customers through automated means. Thus, NASD member firms' customers will benefit from the continued fee reduction.

2. Statutory Basis

Nasdaq believes that the proposed rule change is consistent with the provisions of Section 15A of the Act,[8] in general, and with Sections 15A(b)(5)[9] and 15A(b)(6)[10] of the Act, in particular, in that the proposal is designed to provide for the equitable allocation of reasonable fees among members and other persons using any facility or system which the Association operates or controls, and it does not unfairly discriminate between customers, issuers, brokers or dealers. In addition, Nasdaq believes that the fee reduction enhances the public's access to market data that is relevant to investors when they make financial decisions. Nasdaq further believes that the public's enhanced access to this data may encourage increased public participation in the securities markets.

B. Self-Regulatory Organization's Statement on Burden on Competition

Nasdaq believes that the proposed rule change will impose no burden on competition that is not necessary or

[6] *See* Securities Exchange Act Release No. 43190 (August 22, 2000), 65 FR 52460 (August 29, 2000) (SR–NASD–2000–47). NQDS is also referred to as the ''Nasdaq Quotation Dissemination Service.''

[7] Pursuant to NASD Rule 7010(e), Nasdaq separately distributes Level 1 data to non-professionals for a monthly fee of $1.00.

[8] 15 U.S.C. 78o–3.

[9] 15 U.S.C. 78o–3(b)(5).

[10] 15 U.S.C. 78o–3(b)(6).

appropriate in furtherance of the purposes of the Act.

C. Self-Regulatory Organization's Statement on Comments on the Proposed Rule Change Received from Members, Participants, or Others

Written comments were neither solicited nor received.

III. Date of Effectiveness of the Proposed Rule Change and Timing for Commission Action

Because the foregoing proposed rule change does not:

(i) significantly affect the protection of investors or the public interest;

(ii) impose any significant burden on competition; and

(iii) become operative for 30 days from the date on which it was filed, or such shorter time as the Commission may designate, it has become effective pursuant to Section 19(b)(3)(A) of the Act[11] and Rule 19b–4(f)(6) thereunder.[12] At any time within 60 days of the filing of the proposed rule change, the Commission may summarily abrogate such rule change if it appears to the Commission that such action is necessary or appropriate in the public interest, for the protection of investors, or otherwise in furtherance of the purposes of the Act.

Nasdaq has asked the Commission to waive the five-day pre-filing notice requirement and the 30-day operative delay contained in Rule 19b–4(f)(6).[13] The Commission believes waiving the five-day pre-filing notice requirement and the 30-day operative delay is consistent with the protection of investors and the public interest. Such waiver will allow the reduction in fees reflected in the proposal to be made available on an uninterrupted basis. For these reasons, the Commission designates the proposal to be effective and operative upon filing with the Commission.[14]

IV. Solicitation of Comments

Interested persons are invited to submit written data, views, and arguments concerning the foregoing, including whether the proposal is consistent with the Act. Persons making written submissions should file six copies thereof with the Secretary, Securities and Exchange Commission, 450 Fifth Street, NW., Washington, DC 20549–0609. Copies of the submission, all subsequent amendments, all written statements with respect to the proposed rule change that are filed with the Commission, and all written communications relating to the proposed rule change between the Commission and any person, other than those that may be withheld from the public in accordance with the provisions of 5 U.S.C. 552, will be available for inspection and copying in the Commission's Public Reference Room. Copies of such filing will also be available for inspection and copying at the principal office of the NASD. All submissions should refer to file number SR–NASD–2003–132 and should be submitted by September 17, 2003.

For the Commission, by the Division of Market Regulation, pursuant to delegated authority.[15]

Margaret H. McFarland,

Deputy Secretary.

[FR Doc. 03–21942 Filed 8–26–03; 8:45 am]

BILLING CODE 8010–01–P

SECURITIES AND EXCHANGE COMMISSION

[Release No. 34–48387; File No. SR–NASD–2003–117]

Self-Regulatory Organizations; Notice of Filing and Immediate Effectiveness of Proposed Rule Change by the National Association of Securities Dealers, Inc. To Introduce Fees for NASD Members Using the Financial Information Exchange Protocol To Connect to Nasdaq

August 21, 2003.

Pursuant to Section 19(b)(1) of the Securities Exchange Act of 1934 (''Act''),[1] and Rule 19b–4 thereunder,[2] notice is hereby given that on July 31, 2003, the National Association of Securities Dealers, Inc. (''NASD''), through its subsidiary, The Nasdaq Stock Market, Inc. (''Nasdaq''), filed with the Securities and Exchange Commission (''Commission'') the proposed rule change as described in Items I, II and III below, which Items have been prepared by Nasdaq. Nasdaq has designated this proposal as one establishing or changing a due, fee or other charge imposed by the self-regulatory organization under Section 19(b)(3)(A)(ii) of the Act[3] and Rule 19b–4(f)(2) thereunder,[4] which renders the proposed rule change effective upon filing with the Commission. The Commission is publishing this notice to solicit comments on the proposed rule change from interested persons.

I. Self-Regulatory Organization's Statement of the Terms of Substance of the Proposed Rule Change

Nasdaq is filing this proposed rule change to propose connectivity and testing fees for NASD members wishing to use the Financial Information Exchange (''FIX'') protocol to connect to Nasdaq.[5] Nasdaq proposes to implement the change to Rule 7050(d) on August 1, 2003, and the change to Rule 7010(f) on August 25, 2003.

The text of the proposed rule change is set forth below. Proposed new language is in *italics;* proposed deletions are in [brackets].

* * * * *

7000. CHARGES FOR SERVICES AND EQUIPMENT

* * * * *

Rule 7010. System Services

(a)–(e) No change.

(f) Nasdaq Workstation™ Service

(1) No change.

(2) The following charges shall apply for each [CTCI] subscriber *using CTCI and/or FIX:*

Options	Price
Option 1:	
Dual 56kb lines (one for redundancy), [and] single hub and router, *and optional single FIX port*.	$1,275/month.
Option 2:	
Dual 56kb lines (one for redundancy), dual hubs (one for redundancy), [and] dual routers (one for redundancy), *and optional single FIX port*.	$1,600/month.
Option 3:	

[11] 15 U.S.C. 78s(b)(3)(A).

[12] 17 CFR 240.19b–4(f)(6).

[13] 17 CFR 240.19b–4(f)(6).

[14] For purposes only of accelerating the operative date of this proposal, the Commission has considered the proposed rule's impact on efficiency, competition, and capital formation. 15 U.S.C. 78c(f).

[15] 17 CFR 200.30–3(a)(12).

[1] 15 U.S.C. 78s(b)(1).

[2] 17 CFR 240.19b–4.

[3] 15 U.S.C. 78s(b)(3)(A)(ii).

[4] 17 CFR 240.19b–4(f)(2).

[5] Nasdaq is also submitting a proposed rule change to introduce these fees for non-members. *See* File No. SR–NASD–2003–118 (July 31, 2003).

Options	Price
Dual T1 lines (one for redundancy), dual hubs (one for redundancy), [and] dual routers (one for redundancy)*, and optional single FIX port* Includes base bandwidth of 128kb.	$8,000/month *(CTCI or CTCI/FIX lines)* *$4,000/month (FIX-only lines).*
FIX Port Charge	*$300/port/month.*
Option 1, 2, or 3 with Message Queue software enhancement	Fee for Option 1, 2, or 3 (including any Bandwidth Enhancement Fee) plus 20%.
Disaster Recovery Option:	
Single 56kb line with single hub and router *and optional single FIX port.* (For remote disaster recovery sites only.).	$975/month.
Bandwidth Enhancement Fee (for T1 subscribers only)	$600/month per 64kb increase above 128kb T1 base.
Installation Fee	$2,000 per site for dual hubs and routers. $1,000 per site for single hub and router.
Relocation Fee (for the movement of TCP/IP-capable lines within a single location).	$1,700 per relocation.

(g)–(s) No change.

* * * * *

7050. Other Services

(a)–(c) No change.

(d) Nasdaq Testing Facility

(1) Subscribers that conduct tests of their computer-to-computer interface (CTCI), NWII application programming interface (API), *Financial Information Exchange (FIX) interface,* or market data vendor feeds through the Nasdaq Testing Facility (NTF) shall pay the following charges:

$285/hour	For an Active Connection for CTCI/NWII API/*FIX* testing during the normal operating hours of the NTF;
$75/hour	For an Idle Connection for CTCI/NWII API/*FIX* testing during the normal operating hours of the NTF, unless such an Idle Connection is over a dedicated circuit;
No charge	For an Idle Connection for CTCI/NWII API/*FIX* testing if such an Idle Connection is over a dedicated circuit during the normal operating hours of the NTF;
$333/hour	For CTCI/NWII API/*FIX* testing (for both Active and Idle Connections) at all times other than the normal operating hours of the NTF.

(2)(A) An ''Active Connection'' commences when the user begins to send and/or receive a transaction to and from the NTF and continues until the earlier of disconnection or the commencement of an Idle Connection.

(B) An ''Idle Connection'' commences after a Period of Inactivity and continues until the earlier of disconnection or the commencement of an Active Connection. If a Period of Inactivity occurs immediately after subscriber's connection to the NTF is established and is then immediately followed by an Idle Connection, then such Period of Inactivity shall also be deemed a part of the Idle Connection.

(C) A ''Period of Inactivity'' is an uninterrupted period of time of specified length when the connection is open but the NTF is not receiving from or sending to subscriber any transactions. The length of the Period of Inactivity shall be such period of time between 5 minutes and 10 minutes in length as Nasdaq may specify from time to time by giving notice to users of the NTF.

(3) The foregoing hourly fees shall not apply to market data vendor feed testing, or testing occasioned by:

(A) new or enhanced services and/or software provided by Nasdaq;

(B) modifications to software and/or services initiated by Nasdaq in response to a contingency; or

(C) testing by a subscriber of a Nasdaq service that the subscriber has not used previously, except if more than 30 days have elapsed since the subscriber commenced the testing of such Nasdaq service.

(4) Subscribers that conduct CTCI/API/*FIX* or market data vendor feed tests using a dedicated circuit shall pay a monthly fee, in addition to any applicable hourly fee described in section (d)(1) above, in accordance with the following schedule:

Service	Description	Price
NTF Market Data	Test Market Data Vendor Feed over a 56kb dedicated circuit.	$1,100/circuit/month.
NTF NWII API	NWII API service to an onsite test SDP over a 56kb dedicated circuit.	$1,100/circuit/month.
NTF CTCI/*FIX*	CTCI *and/or FIX* service over a 56kb dedicated circuit.	$1,100/circuit/month.
NTF Test Suite	NWII API service, *FIX* and CTCI service over two 56kb circuits (128kb).	$1,800/2 circuits/month.
NTF Circuit Installation	Installation of any service option including SDP configuration.	$700/circuit/installation.

(5) New NTF subscribers that sign a one-year agreement for dedicated testing service shall be eligible to receive 90 calendar days free dedicated testing service.

(6) ''New NTF subscribers'' are subscribers that

(A) have never had dedicated testing service; or

(B) have not had dedicated testing service within the last 6 calendar months.

(e) No change.

* * * * *

II. Self-Regulatory Organization's Statement of the Purpose of, and Statutory Basis for, the Proposed Rule Change

In its filing with the Commission, Nasdaq included statements concerning the purpose of and basis for the proposed rule change and discussed any comments it received on the proposed rule change. The text of these statements may be examined at the places specified in Item IV below. Nasdaq has prepared summaries, set forth in Sections A, B, and C below, of the most significant aspects of such statements.

A. Self-Regulatory Organization's Statement of the Purpose of, and Statutory Basis for, the Proposed Rule Change

1. Purpose

Nasdaq currently offers market participants and other Nasdaq subscribers two messaging protocols for communicating with Nasdaq systems: computer-to-computer interface (''CTCI'') and application programming interface (''API''). Effective August 25, 2003, Nasdaq will expand the connectivity options available to its subscribers by introducing the FIX protocol as a means of accessing SuperMontage. The FIX protocol was first developed in 1992, and since that time has become the dominant protocol for messaging among equity market participants. Nasdaq represents that FIX is now used by over 50% of all U.S. firms in the equity securities business, and its users include market makers and other broker-dealers, institutional investors, electronic communications networks (''ECNs''), and national securities exchanges.

Nasdaq proposes to amend Rule 7010(f) to reflect the various pricing options that Nasdaq proposes to make available to firms that connect through FIX. Firms that already have dedicated CTCI circuits would be able to use FIX over their existing circuits. Thus, these firms would be able to begin using FIX immediately, without having to incur the costs or delays associated with installation of new circuits. Moreover, the charges for circuits used to support both FIX and CTCI would be the same as the current charges for CTCI-only circuits (although a firm that increases its bandwidth usage as a result of using FIX might have to install additional circuits or pay the existing bandwidth enhancement fee of $600 per 64 kilobit per second increase if it exhausts its existing available bandwidth).[6] However, Nasdaq would assess a ''port charge'' of $300 per month for each port (*i.e.*, a connection to a server that operates off of the circuit) that uses FIX, with the first port provided free of charge to firms with direct connections. Each customer would determine the number of ports that it requires, based on its message traffic needs.

A firm that does not currently have CTCI circuits would be able to obtain circuits to support both CTCI and FIX at the same prices that currently apply to CTCI circuits, or would be able to obtain dual 128 kb circuits to support FIX only at a reduced rate of $4,000 per month (compared with the $8,000 per month charge of 128 kb circuits that support CTCI and FIX). The lower fee reflects the lower costs to Nasdaq of supporting FIX (as compared with CTCI), as well as the more limited range of functionality that would be accessible to firms through FIX.[7] Firms would also be able to connect to Nasdaq indirectly through service bureaus and third-party private networks that provide the option of FIX connectivity to their subscribers. In such cases, Nasdaq would charge for FIX or CTCI/FIX circuits if any must be supplied by Nasdaq to establish connectivity, and would also charge the end user a port charge of $300 per month for each port that it requires, based on its message traffic needs.

Firms wishing to use FIX would be able to begin testing FIX connectivity during the month of August 2003. Accordingly, Nasdaq also proposes to amend Rule 7050(d), which lists the fees for the Nasdaq Testing Facility (''NTF''). The NTF would be available for testing FIX connectivity at the same rates that currently apply to CTCI/API testing. The fees for testing without a dedicated testing circuit are: (i) $285 per hour for an active connection during the normal operating hours of the NTF, (ii) $75 per hour for an idle connection during normal operating hours; and (iii) $333 per hour for an active or idle connection at times other than normal operating hours. In addition, firms have the option of obtaining dedicated 56kb testing circuits at a rate of $1,100 for one CTCI/FIX circuit or $1,800 for two circuits usable for API, CTCI, and FIX. Hourly fees also apply to testing through dedicated circuits, with the exception of the charge for idle connections during normal operating hours. Pursuant to Rule 7050(d)(3)(A), however, the hourly fees would not be applied to testing conducted prior to August 25, 2003. Moreover, pursuant to Rule 7050(d)(3)(C), the hourly fees would not be applied thereafter to a new FIX subscriber until 30 days after it commences testing.

2. Statutory Basis

Nasdaq believes that the proposed rule change is consistent with the provisions of Section 15A of the Act,[8] in general, and with Section 15A(b)(5) of the Act,[9] in particular, in that it provides for the equitable allocation of reasonable dues, fees and other charges among members and issuers and other persons using any facility or system which the NASD operates or controls. The proposed fees for FIX connectivity and testing are similar in structure and dollar amount to existing fees for CTCI and API connectivity and testing.

B. Self-Regulatory Organization's Statement on Burden on Competition

Nasdaq does not believe that the proposed rule change will result in any burden on competition that is not necessary or appropriate in furtherance of the purposes of the Act.

C. Self-Regulatory Organization's Statement on Comments on the Proposed Rule Change Received From Members, Participants or Others

Written comments were neither solicited nor received.

III. Date of Effectiveness of the Proposed Rule Change and Timing for Commission Action

The proposed rule change has become immediately effective pursuant to Section 19(b)(3)(A)(ii) of the Act,[10] and subparagraph (f)(2) of Rule 19b–4 thereunder,[11] in that it establishes or

[6] The term ''bandwidth'' refers to the amount of data that can be transmitted over a circuit in one second. Accordingly, bandwidth enhancements allow a subscriber to send and receive a greater volume of data over a circuit.

[7] CTCI and API can be used to access a range of Nasdaq systems, including SuperMontage, ACT and Nasdaq InterMarket. At the time of its introduction in late August 2003, however, FIX will provide access solely to SuperMontage. Based on user demand, Nasdaq will evaluate whether to make additional Nasdaq functionality available through FIX in the future.

[8] 15 U.S.C. 78*o*–3.

[9] 15 U.S.C. 78*o*–3(b)(5).

[10] 15 U.S.C. 78s(b)(3)(A)(ii).

[11] 17 CFR 240.19b–4(f)(2).

changes a due, fee, or other charge imposed by the self-regulatory organization. At any time within 60 days of the filing of such proposed rule change, the Commission may summarily abrogate the rule change if it appears to the Commission that such action is necessary or appropriate in the public interest, for the protection of investors, or otherwise in furtherance of the purposes of the Act.

IV. Solicitation of Comments

Interested persons are invited to submit written data, views, and arguments concerning the foregoing, including whether the proposed rule change is consistent with the Act. Persons making written submissions should file six copies thereof with the Secretary, Securities and Exchange Commission, 450 Fifth Street, NW., Washington, DC 20549–0609. Copies of the submission, all subsequent amendments, all written statements with respect to the proposed rule change that are filed with the Commission, and all written communications relating to the proposed rule change between the Commission and any person, other than those that may be withheld from the public in accordance with the provisions of 5 U.S.C. 552, will be available for inspection and copying in the Commission's Public Reference Room. Copies of such filing will also be available for inspection and copying at the principal office of the NASD. All submissions should refer to File No. SR-NASD–2003–117 and should be submitted by September 17, 2003.

For the Commission, by the Division of Market Regulation, pursuant to delegated authority.[12]

Margaret H. McFarland,

Deputy Secretary.

[FR Doc. 03–21943 Filed 8–26–03; 8:45 am]

BILLING CODE 8010–01–P

[12] 17 CFR 200.30–3(a)(12).

SECURITIES AND EXCHANGE COMMISSION

[Release No. 34–48379; File No. SR–NASD–2003–109]

Self-Regulatory Organizations; Notice of Filing and Immediate Effectiveness of Proposed Rule Change and Amendment No. 1 Thereto by the National Association of Securities Dealers, Inc. Relating to Changes in Fingerprint Processing Fees Contained in Schedule A of the NASD By-Laws

August 20, 2003.

Pursuant to Section 19(b)(1) of the Securities Exchange Act of 1934 (''Act'' or ''Exchange Act''),[1] and Rule 19b–4 thereunder,[2] notice is hereby given that on July 10, 2003, the National Association of Securities Dealers, Inc. (''NASD'') filed with the Securities and Exchange Commission (''SEC'' or ''Commission'') the proposed rule change as described in Items I, II, and III below, which Items have been prepared by NASD. On August 7, 2003, NASD filed an amendment to the proposal.[3] The Commission is publishing this notice to solicit comments on the proposed rule change from interested persons.

I. Self-Regulatory Organization's Statement of the Terms of Substance of the Proposed Rule Change

NASD is proposing to amend Section (4)(b) of Schedule A of NASD's By-Laws to: (1) Increase the $10.00 charge for each set of fingerprints submitted by a member to NASD for processing to $13.00; (2) establish a $13.00 charge to be paid to NASD for posting each set of fingerprint results and identifying information that have been processed through another self-regulatory organization (''SRO'') and submitted by a member to NASD; and (3) substitute the term ''fingerprints'' for ''fingerprint cards.'' NASD intends for the fees to become operative on July 15, 2003. Below is the text of the proposed rule change. Proposed new language is in italics; proposed deletions are in brackets.[4]

* * * * *

Schedule A to NASD By-Laws

Assessments and fees pursuant to the provisions of Article VI of the By-Laws of NASD shall be determined on the following basis.

Sections 1 through 3 No change.

Section 4—Fees

(a) No change.

(b) NASD shall assess each member a fee of:

(1) through (3) No change.

(4) [$10.00] *$13.00* for *processing and posting to the CRD system each set of fingerprints* [each fingerprint card] submitted by the member to NASD, plus any other charge that may be imposed by the United States Department of Justice for processing [such] *each set of* fingerprints [card; and].

(5) $13.00 for processing and posting to the CRD system each set of fingerprint results and identifying information that have been processed through another self-regulatory organization and submitted by a member to NASD.

[(5)] (*6*) $30.00 annually for each of the member's registered representatives and principals for system processing.

[(6)] (*7*) 10% of a member's final annual renewal assessment or $100, whichever is greater, with a maximum charge of $5,000, if the member fails timely to pay the amount indicated on its preliminary renewal statement.

(c) through (l) No change.

* * * * *

II. Self-Regulatory Organization's Statement of the Purpose of, and Statutory Basis for, the Proposed Rule Change

In its filing with the Commission, NASD included statements concerning the purpose of and the basis for the proposed rule change and discussed any comments it received on the proposed rule change. The text of these statements may be examined at the places specified in Item IV below. NASD has prepared summaries, set forth in Sections A, B, and C below, of the most significant aspects of such statements.

[1] 15 U.S.C. 78s(b)(1).

[2] 17 CFR 240.19b–4.

[3] *See* letter from Shirley H. Weiss, Associate General Counsel, Office of General Counsel, Regulatory Policy and Oversight, NASD, to Jonathan G. Katz, Secretary, Commission, dated August 6, 2003. (''Amendment No. 1''). In Amendment No. 1, NASD substituted in the first paragraph of Section I of Exhibit 1 of the filing the word ''fingerprints'' for the phrase ''fingerprint images and identifying information'' to make the introductory language of Section I consistent with the proposed rule text. For purposes of calculating the 60-day abrogation period, the Commission considers the period to have commenced on August 7, 2003.

[4] At the NASD's request, the Commission made certain non-substantive, typographical changes to the proposed rule text to make it consistent with the current NASD rule text. Telephone conference between Shirley H. Weiss, Associate General Counsel, Office of General Counsel, Regulatory Policy and Oversight, NASD, and Christopher B. Stone, Special Counsel, Division of Market Regulation, Commission (July 22, 2003).

A. Self-Regulatory Organization's Statement of the Purpose of, and Statutory Basis for, the Proposed Rule Change

1. Purpose

The purpose of the proposed rule change to Section 4(b) is to (1) increase the $10.00 charge for each set of fingerprints submitted by a member to NASD for processing to $13.00; and (2) establish a $13.00 charge to be paid to NASD for posting each set of fingerprint results and identifying information processed by another SRO on the Central Registration Depository (''CRD'' or ''Web CRD'').

NASD currently processes fingerprint cards submitted by member firms on behalf of their associated persons who are required to be fingerprinted pursuant to the Act. Among other things, NASD collects the fingerprint cards, images them, links them to an associated person's CRD record, and forwards them to the Federal Bureau of Investigation (''FBI''). NASD tracks the status of these cards and posts the results of the FBI's fingerprint check on the CRD system.[5] NASD currently charges members $10.00 for processing each fingerprint card and additionally collects $22.00 from members on behalf of the FBI as appropriate, consistent with FBI guidelines.[6] The $3.00 increase proposed in the rule change will raise NASD's fingerprint processing fee from $10.00 to $13.00 and, when the FBI's $22.00 fee is included, will raise the total fingerprint processing fee from $32.00 to $35.00. The additional $3.00 charge will help cover NASD costs associated with its fingerprinting program.

The proposed rule change also establishes a new $13.00 fee to be charged by NASD to members that submit to NASD for posting to the CRD system fingerprint results and identifying information that has been processed through another SRO. Pursuant to Section 17(f)(2) of the Act[7] and Rule 17f–2 thereunder,[8] other SROs may process fingerprint cards for persons required to have their fingerprints processed through the FBI, consistent with fingerprint plans submitted by those SROs to the Commission. NASD currently accepts the results (*i.e.*, the actual disposition/record sent by the FBI) of fingerprints processed through another SRO at no cost to the member. Consistent with Commission Rule 17f–2(b),[9] members may, under certain enumerated circumstances, submit such results in lieu of submitting fingerprint cards. Upon receipt of the results, NASD staff images and stores the documents received, verifies and matches the fingerprint processing results to an existing CRD record if available, and manually posts the results to the CRD system. In the event that the individual does not already have a CRD record, NASD staff would be required to create a new base record in the CRD system. NASD proposes charging members a $13.00 fee to perform these activities. Because the FBI would have already processed these fingerprints, the member would have already paid the FBI fee, and NASD would not be charging the additional FBI fee under these circumstances.

NASD also proposes substituting the term ''set of fingerprints'' for ''fingerprint cards.'' This proposed change describes the traditional ink and paper fingerprint cards in current use, but in recognition of the changing technology available for fingerprint processing, would also describe the electronic transmission of fingerprints.

The proposed fingerprint processing fees will be assessed starting on July 15, 2003.

2. Statutory Basis

NASD believes that the proposed rule change is consistent with the provisions of Sections 15A(b)(5) of the Act,[10] which requires, among other things, the equitable allocation of reasonable dues, fees, and other charges among members and issuers and other persons using any facility or system that NASD operates or controls. NASD believes that the proposed fingerprint processing fees are reasonable and fairly reflect NASD's costs incurred in processing fingerprints and posting each set of fingerprint results and identifying information processed by another SRO on CRD.

B. Self-Regulatory Organization's Statement on Burden on Competition

NASD does not believe that the proposed rule change will result in any burden on competition that is not necessary or appropriate in furtherance of the purposes of the Act.

C. Self-Regulatory Organization's Statement on Comments on the Proposed Rule Change Received from Members, Participants, or Others

Written comments were neither solicited nor received.

III. Date of Effectiveness of the Proposed Rule Change and Timing for Commission Action

The foregoing rule change has become effective upon filing pursuant to Section 19(b)(3)(A)(ii)[11] of the Act and Rule 19b–4(f)(2) thereunder[12] as establishing or changing a due, fee, or other charge paid solely by members of the NASD. NASD intends to implement this rule change on July 15, 2003. At any time within 60 days of the filing of such proposed rule change, the Commission may summarily abrogate such rule change if it appears to the Commission that such action is necessary or appropriate, in the public interest, for the protection of investors, or otherwise in furtherance of the purposes of the Act.[13]

IV. Solicitation of Comments

Interested persons are invited to submit written data, views, and arguments concerning the foregoing, including whether the proposed rule change is consistent with the Act. Persons making written submissions should file six copies thereof with the Secretary, Securities and Exchange Commission, 450 Fifth Street, NW., Washington, DC 20549–0609. Copies of the submission, all subsequent amendments, all written statements with respect to the proposed rule change that are filed with the Commission, and all written communications relating to the proposed rule change between the

[5] Generally speaking, results fall into one of three categories: ''clear,'' ''criminal history record information,'' or ''illegible'' (if the FBI could not ''read'' the images submitted). ''Criminal history record information'' (''CHRI'') is defined in Section 28 of the Code of Federal Regulations as ''information collected by criminal justice agencies on individuals consisting of identifiable descriptions and notations of arrests, indictments, informations, or other formal criminal charges, and any disposition arising therefrom, sentencing, correction supervision, and release. The term does not include identification information such as fingerprint records to the extent that such information does not indicate involvement of the individual in the criminal justice system.'' In general terms, CHRI is composed of the results of a fingerprint check on a registered or associated person when information received from the FBI reflects an arrest history.

[6] The FBI determines when and on what basis it will charge the $22.00 fee. For example, the FBI does not charge a fee on the submission of a second card when it identifies both the first and the second card as illegible for a particular individual.

[7] 15 U.S.C. 78q(f)(2).

[8] 17 CFR 240.17f–2.

[9] 17 CFR 240.17f–2(b). At the NASD's request, the Commission added the subparagraph (b) to the rule reference to clarify the ''enumerated circumstances'' being referred to by the NASD. Telephone conference between Richard E. Pullano, Associate Vice President and Chief Counsel, Registration and Disclosure, NASD, Shirley H. Weiss, Associate General Counsel, Office of General Counsel, Regulatory Policy and Oversight, NASD, and Christopher B. Stone, Special Counsel, Division of Market Regulation, Commission (July 22, 2003).

[10] 15 U.S.C. 78o–3(b)(5).

[11] 15 U.S.C. 78s(b)(3)(A)(ii).

[12] 17 CFR 240.19b–4(f)(2).

[13] *See* Section 19(b)(3)(C) of the Act, 15 U.S.C. 78s(b)(3)(C).

Commission and any person, other than those that may be withheld from the public in accordance with the provisions of 5 U.S.C. 552, will be available for inspection and copying in the Commission's Public Reference Room. Copies of such filing will also be available for inspection and copying at the principal office of the NASD. All submissions should refer to File No. SR–NASD–2003–109 and should be submitted by September 17, 2003.

For the Commission, by the Division of Market Regulation, pursuant to delegated authority.[14]

J. Lynn Taylor,

Assistant Secretary.

[FR Doc. 03–21944 Filed 8–26–03; 8:45 am]

BILLING CODE 8010–01–P

SECURITIES AND EXCHANGE COMMISSION

[Release No. 34–48373; File No. SR–NASD–2003–123]

Self-Regulatory Organizations; Notice of Filing and Immediate Effectiveness of Proposed Rule Change by the National Association of Securities Dealers, Inc. To Institute an Hourly Maintenance Fee Associated with Use of the Nasdaq Workstation II Service by NASD Members

August 20, 2003.

Pursuant to Section 19(b)(1) of the Securities Exchange Act of 1934 (''Act''),[1] and Rule 19b–4 thereunder,[2] notice is hereby given that on August 6, 2003, the National Association of Securities Dealers, Inc. (''NASD''), through its subsidiary, The Nasdaq Stock Market, Inc. (''Nasdaq''), filed with the Securities and Exchange Commission (''Commission'') the proposed rule change as described in Items I, II, and III below, which Items have been prepared by Nasdaq. The Commission is publishing this notice to solicit comments on the proposed rule change from interested persons.

I. Self-Regulatory Organization's Statement of the Terms of Substance of the Proposed Rule Change

Nasdaq proposes to institute an hourly fee for maintenance services supplied for equipment used in connection with the Nasdaq Workstation™ II (''NWII'') service.[3] Nasdaq proposes to implement the proposed rule change immediately.[4]

The text of the proposed rule change appears below. New text is in italics. Deleted text is in brackets.

* * * * *

7000. CHARGES FOR SERVICES AND EQUIPMENT

7010. System Services

(a)–(e) No change

(f) Nasdaq Workstation™ Service

(1) The following charges shall apply to the receipt of Level 2 or Level 3 Nasdaq Service via equipment and communications linkages prescribed for the Nasdaq Workstation II Service:

Service Charge	$2,035/month per service delivery platform (''SDP'').
Display Charge	$525/month per logon for the first 150 logons. $200/month for each additional logon.
Additional Circuit/SDP Charge	$3,235/month[*].
PD and SDP Maintenance:	
Monthly maintenance agreement	$55/presentation device (''PD'') logon or SDP/month.
Hourly fee for maintenance provided without monthly maintenance agreement.	*$195 per hour (two hour minimum), plus cost of parts.*

A subscriber that accesses Nasdaq Workstation II Service via an application programming interface (''API'') shall be assessed the Service Charge for each of the subscriber's SDPs and shall be assessed the Display Charge for each of the subscriber's logons, including logons of an NWII substitute or quote-update facility. API subscribers also shall be subject to the Additional Circuit/SDP Charge.

*A subscriber shall be subject to the Additional Circuit/SDP Charge when the subscriber has not maximized capacity on its SDP(s) by placing eight logons on an SDP and obtains an additional SDP(s); in such case, the subscriber shall be charged the Additional Circuit/SDP Charge (in lieu of the service charge) for each ''underutilized'' SDP(s) (*i.e.*, the difference between the number of SDPs a subscriber has and the number of SDPs the subscriber would need to support its logons, assuming an eight-to-one ratio). A subscriber also shall be subject to the Additional Circuit/SDP Charge when the subscriber has not maximized capacity on its T1 circuits by placing eighteen SDPs on a T1 circuit; in such case, the subscriber shall be charged the Additional Circuit/SDP Charge (in lieu of the service charge) for each ''underutilized'' SDP slot on the existing T1 circuit(s). Regardless of the SDP allocation across T1 circuits, a subscriber will not be subject to the Additional Circuit/SDP Charge if the subscriber does not exceed the minimum number of T1 circuits needed to support its SDP, assuming an eighteen-to-one ratio.*

(2) No change.

[* A subscriber shall be subject to the Additional Circuit/SDP Charge when the subscriber has not maximized capacity on its SDP(s) by placing eight logons on an SDP and obtains an additional SDP(s); in such case, the subscriber shall be charged the Additional Circuit/SDP Charge (in lieu of the service charge) for each ''underutilized'' SDP(s) (*i.e.*, the difference between the number of SDPs a subscriber has and the number of SDPs the subscriber would need to support its logons, assuming an eight-to-one ratio). A subscriber also shall be subject to the Additional Circuit/SDP Charge when the subscriber has not maximized capacity on its T1 circuits by placing eighteen SDPs on a T1 circuit; in such case, the subscriber shall be charged the Additional Circuit/SDP Charge (in lieu of the service charge) for each ''underutilized'' SDP slot on the existing T1 circuit(s). Regardless of the SDP allocation across T1 circuits, a subscriber will not be subject to the

[14] 17 CFR 200.30–3(a)(12).

[1] 15 U.S.C. 78s(b)(1).

[2] 17 CFR 240.19b–4.

[3] This filing applies to persons that are NASD members. On August 6, 2003, Nasdaq also submitted a proposed rule change to implement an identical charge for non-members. *See* File No. SR–NASD–2003–124.

[4] In this filing, Nasdaq is also moving the text of the footnote to NASD Rule 7010(f) into the text of the rule to improve the clarity of the rule's presentation in the NASD Manual.

Additional Circuit/SDP Charge if the subscriber does not exceed the minimum number of T1 circuits needed to support its SDP, assuming an eighteen-to-one ratio.]

(g)–(u) No change.

* * * * *

II. Self-Regulatory Organization's Statement of the Purpose of, and Statutory Basis for, the Proposed Rule Change

In its filing with the Commission, Nasdaq included statements concerning the purpose of and basis for the proposed rule change and discussed any comments it received on the proposed rule change. The text of these statements may be examined at the places specified in Item IV below. Nasdaq has prepared summaries, set forth in Sections A, B, and C below, of the most significant aspects of such statements.

A. Self-Regulatory Organization's Statement of the Purpose of, and Statutory Basis for, the Proposed Rule Change

1. Purpose

The NWII service allows market participants to access SuperMontage and other Nasdaq facilities through Nasdaq's Enterprise Wide Network II (''EWN II''). Each NWII subscriber location has at least one service delivery platform (''SDP'') that connects to the EWN II by a dedicated T1 circuit pair. The subscriber then connects the workstations used by its employees to the SDP. Workstations may be either Nasdaq Workstation presentation devices (''PDs'') provided by Nasdaq, or workstations and software supplied by the subscriber (often referred to as an ''application programming interface'' device, or an ''NWII substitute'').

Nasdaq currently allows subscribers to contract with Nasdaq for maintenance of their NWII PDs and SDPs on a monthly basis, at the rate of $55 per PD logon or SDP per month. Maintenance is provided by Nasdaq personnel in the New York metropolitan area and by a contractor in other areas of the country. Nasdaq is now proposing to supplement this monthly maintenance option with an hourly maintenance option for subscribers that may not wish to commit to a monthly maintenance agreement. The fee for maintenance provided without a monthly maintenance agreement will be $195 per hour, with a two-hour minimum charge for all service calls, plus the cost of parts supplied.

2. Statutory Basis

Nasdaq believes that the proposed rule change is consistent with the provisions of Section 15A of the Act,[5] in general, and Section 15A(b)(5) of the Act,[6] in particular, in that it provides for the equitable allocation of reasonable dues, fees, and other charges among members and issuers and other persons using any facility or system which the NASD operates or controls.

B. Self-Regulatory Organization's Statement on Burden on Competition

Nasdaq does not believe that the proposed rule change will result in any burden on competition that is not necessary or appropriate in furtherance of the purposes of the Act.

C. Self-Regulatory Organization's Statement on Comments on the Proposed Rule Change Received From Members, Participants, or Others

Written comments were neither solicited nor received.

III. Date of Effectiveness of the Proposed Rule Change and Timing for Commission Action

The foregoing proposed rule change has become effective pursuant to Section 19(b)(3)(A)(ii) of the Act[7] and subparagraph (f)(2) of Rule 19b–4[8] thereunder, because it establishes or changes a due, fee, or other charge. At any time within 60 days of August 6, 2003, the Commission may summarily abrogate such rule change if it appears to the Commission that such action is necessary or appropriate in the public interest, for the protection of investors, or otherwise in furtherance of the purposes of the Act.[9]

IV. Solicitation of Comments

Interested persons are invited to submit written data, views, and arguments concerning the foregoing, including whether the proposed rule change is consistent with the Act. Persons making written submissions should file six copies thereof with the Secretary, Securities and Exchange Commission, 450 Fifth Street, NW., Washington DC 20549–0609. Copies of the submission, all subsequent amendments, all written statements with respect to the proposed rule change that are filed with the Commission, and all written communications relating to the proposed rule change between the Commission and any person, other than those that may be withheld from the public in accordance with the provisions of 5 U.S.C. 552, will be available for inspection and copying in the Commission's Public Reference Room. Copies of such filings will also be available for inspection and copying at the principal office of the NASD. All submissions should refer to File No. SR–NASD–2003–123 and should be submitted by September 17, 2003.

For the Commission, by the Division of Market Regulation, pursuant to delegated authority.[10]

J. Lynn Taylor,

Assistant Secretary.

[FR Doc. 03–21945 Filed 8–26–03; 8:45 am]

BILLING CODE 8010–01–P

[5] 15 U.S.C. 78*o*–3.

[6] 15 U.S.C. 78*o*–3(b)(5).

[7] 15 U.S.C. 78s(b)(3)(A)(ii).

[8] 17 CFR 240.19b–4(f)(2).

[9] *See* 15 U.S.C. 78(b)(3)(C).

[10] 17 CFR 200.30–3(a)(12).

SECURITIES AND EXCHANGE COMMISSION

[Release No. 34–48363; File No. SR–PCX–2003–39]

Self-Regulatory Organizations; Notice of Filing and Immediate Effectiveness of Proposed Rule Change Relating to Changes in Schedule of Fees and Charges

August 19, 2003.

Pursuant to Section 19(b)(1) of the Securities Exchange Act of 1934 (''Act'')[1] and Rule 19b–4 thereunder,[2] notice is hereby given that on July 28, 2003, the Pacific Exchange, Inc. (''PCX'') submitted to the Securities and Exchange Commission (''Commission'') the proposed rule change as described in Items I, II, and III below, which the PCX has prepared. The Commission is publishing this notice to solicit comments on the proposed rule change from interested persons.

I. Self-Regulatory Organization's Statement of the Terms of Substance of the Proposed Rule Change

The PCX is proposing to amend its schedule of rates and charges in order to provide a limit on the fees that it collects with regard to certain options strategy executions.

The text of the proposed rule change is available at the PCX and at the Commission.

II. Self-Regulatory Organization's Statement of the Purpose of, and Statutory Basis for, the Proposed Rule Change

In its filing with the Commission, the PCX included statements concerning the

[1] 15 U.S.C. 78s(b)(1).

[2] 17 CFR 240.19b–4.

purpose of and basis for the proposed rule change and discussed any comments it had received on the proposed rule change. The text of these statements may be examined at the places specified in Item IV below. The PCX has prepared summaries, set forth in sections A, B, and C below, of the most significant aspects of such statements.

A. Self-Regulatory Organization's Statement of the Purpose of, and Statutory Basis for, the Proposed Rule Change

1. Purpose

The PCX currently assesses the following trade-related charges on transactions involving equity or index options: [3]

Transaction fees: $0.21 per contract side.
Comparison fees: $0.05 per contract.
Ticket data entry fees: $0.25 per firm trade and $0.50 per market maker trade.

From time to time, market participants engage in financing strategies known as option strategy plays for the purpose of reducing risk. These transactions include reversals and conversions,[4] dividend spreads,[5] and box spreads.[6] Because the referenced options strategy transactions are generally executed by professionals whose profit margins are generally narrow, the PCX proposes to cap the transaction fees associated with such executions at $2,000.[7] The PCX believes that, by keeping fees low, it will be able to attract liquidity by accommodating these transactions. By adopting the $2,000 cap on fees, the PCX focuses on the size of the particular order rather than the aggregate monthly volume of the routing firm.[8] Therefore, the PCX believes that the proposal will not have a disparate impact on members and will not favor any member over another.

2. Statutory Basis

The PCX believes that its proposal is consistent with Section 6(b) of the Act [9] in general, and furthers the objectives of Section 6(b)(4) of the Act [10] in particular, in that it provides for the equitable allocation of reasonable fees among its members.

B. Self-Regulatory Organization's Statement on Burden on Competition

The PCX does not believe that the proposed rule change will impose any burden on competition that is not necessary or appropriate in furtherance of the purposes of the Act.

C. Self-Regulatory Organization's Statement on Comments on the Proposed Rule Change Received From Members, Participants, or Others

The PCX neither solicited nor received written comments concerning the proposed rule change.

III. Date of Effectiveness of the Proposed Rule Change and Timing for Commission Action

Because the foregoing rule change establishes or changes a due, fee, or other charge imposed by the PCX, it has become effective pursuant to Section 19(b)(3)(A) of the Act [11] and Rule 19b–4(f)(2) [12] thereunder. At any time within 60 days after the filing of the proposed rule change, the Commission may summarily abrogate the rule change if it appears to the Commission that such action is necessary or appropriate in the public interest, for the protection of investors, or otherwise in furtherance of the purposes of the Act.

IV. Solicitation of Comments

Interested persons are invited to submit written data, views, and arguments concerning the foregoing, including whether the proposed rule change is consistent with the Act. Persons making written submissions should file six copies thereof with the Secretary, Securities and Exchange Commission, 450 Fifth Street, NW., Washington, DC 20549–0609. Copies of the submission, all subsequent amendments, all written statements with respect to the proposed rule change that are filed with the Commission, and all written communications relating to the proposed rule change between the Commission and any person, other than those that may be withheld from the public in accordance with the provisions of 5 U.S.C. 552, will be available for inspection and copying in the Commission's Public Reference Room. Copies of such filings will also be available for inspection and copying at the principal office of the PCX. All submissions should refer to File No. SR–PCX–2003–39 and should be submitted by September 17, 2003.

For the Commission, by the Division of Market Regulation, pursuant to delegated authority.[13]

J. Lynn Taylor,

Assistant Secretary.

[FR Doc. 03–21946 Filed 8–26–03; 8:45 am]

BILLING CODE 8010–01–P

[3] The PCX also provides a volume discount program that reduces the fees as market makers increase their quarterly average daily contract volume.

[4] Reversals and conversions are transactions that employ calls, puts and the underlying stock to lock in a nearly risk free profit. Reversals are established by combining a short stock position with a short put and a long call position that shares the same strike and expiration. Conversions employ long positions in the underlying stock that accompany long puts and short calls sharing the same strike and expiration.

[5] Dividend spreads are trades involving deep in the money options that exploit pricing differences arising around the time a stock goes ex-dividend.

[6] The Box Spread strategy synthesizes long and short stock positions to create a profit. Specifically, a long call and short put at one strike are combined with a short call and long put at a different strike to create synthetic long and synthetic short stock positions, respectively.

[7] According to the PCX, the $2,000 cap applies to the transaction fees arising from a set of executions forming a single strategy play. The PCX also represents that a member executing such a strategy submits to the PCX a record of the strategy play after it has been executed. The PCX then reviews the submission for accuracy. Conversation between Mai Shiver, Senior Attorney, Regulatory Policy, PCX and Tim Fox, Attorney, Division of Market Regulation, Commission, on August 14, 2003.

[8] The PCX represents that member firms of all sizes can execute transactions large enough to benefit from the proposed fee cap. Conversation between Mai Shiver, Senior Attorney, Regulatory Policy, PCX and Tim Fox, Attorney, Division of Market Regulation, Commission, on August 14, 2003.

[9] 15 U.S.C. 78f(b).

[10] 15 U.S.C. 78f(b)(4).

[11] 15 U.S.C. 78s(b)(3)(A).

[12] 17 CFR 240.19b–4(f)(2).

[13] 17 CFR 200.30–3(a)(12).

SMALL BUSINESS ADMINISTRATION

[Psilos Group Partners II SBIC, L.P., License No. 02/72–0617]

Notice Seeking Exemption Under Section 312 of the Small Business Investment Act, Conflicts of Interest

Notice is hereby given that Psilos Group Partners II SBIC, L.P., 625 Avenue of the Americas, Fourth Floor, New York, NY 10011, a Federal Licensee under the Small Business Investment Act of 1958, as amended (''the Act''), in connection with the financing of a small concern, has sought an exemption under Section 312 of the Act and Section 107.730, Financings which Constitute Conflicts of Interest of the Small Business Administration (''SBA'') Rules and Regulations (13 CFR 107.730 (2000). Psilos Group Partners II SBIC, L.P. proposes to provide equity/debt security financing to Definity Health Corporation. The financing is contemplated for national sales force expansion and working capital.

The financing is brought within the purview of Sec. 107.730(a)(1) of the Regulations because Psilos Group Partners II, L.P. and Psilos Group Partners IIA, L.P., Associates of Psilos Group Partners II SBIC, L.P., collectively own more than ten percent of Definity Health Corporation.

Notice is hereby given that any interested person may submit written comments on the transaction to the Associate Administrator for Investment, U.S. Small Business Administration, 409 Third Street, SW, Washington, DC 20416.

Dated: August 14, 2003.

Harry E. Haskins,

Deputy Associate Administrator for Investment.

[FR Doc. 03–21799 Filed 8–26–03; 8:45 am]

BILLING CODE 8025–01–P

DEPARTMENT OF STATE

[Public Notice 4348]

Establishment of the Advisory Committee on Cultural Diplomacy

Establishment of advisory committee: This notice is published in accordance with the provisions of the Federal Advisory Committee Act (Pub. L. 92–463), and advises of the establishment of the Department of States Advisory Committee on Cultural Diplomacy. The Secretary of State has determined that the establishment of the committee is in the public interest and fulfills the requirements set forth in Pub. L. 107–228, section 224.

Purpose of the advisory committee: The Advisory Committee on Cultural Diplomacy will advise the Secretary on programs and policies to advance the use of cultural diplomacy in United States foreign policy.

FOR FURTHER INFORMATION CONTACT: The Bureau of Educational and Cultural Affairs, Office of Citizen Exchanges, Cultural Programs Division is the organization within the Department of State that is supporting this advisory committee. For additional information, contact Angier Peavey, Advisory Committee Management Secretariat 301 Fourth Street SW., Washington DC 20547, telephone (202) 619–4809.

Dated: July 30, 2003.

Patricia S. Harrison,

Assistant Secretary, Bureau of Educational and Cultural Affairs, Department of State.

[FR Doc. 03–21907 Filed 8–26–03; 8:45 am]

BILLING CODE 4710–05–P

DEPARTMENT OF STATE

[Public Notice 4458]

Bureau of Consular Affairs; Registration for the Diversity Immigrant (DV–2005) Visa Program

ACTION: Notice of registration for the Diversity Immigrant Visa Program.

This public notice provides information on how to apply for the DV 2005 Program. This notice is issued pursuant to 22 CFR 42.33(b)(3) which implements sections 201(a)(3), 201(e), 203(c) and 204(a)(1)(G) of the Immigration and Nationality Act, as amended, (8 U.S.C. 1151, 1153, and 1154(a)(1)(G)).

Instructions for the 2005 Diversity Immigrant Visa Program (DV–2005)

The congressionally mandated Diversity Immigrant Visa Program is administered on an annual basis by the Department of State and conducted under the terms of Section 203(c) of the Immigration and Nationality Act (INA). Section 131 of the Immigration Act of 1990 (Pub. L. 101–649) amended INA 203 to provide for a new class of immigrants known as ''diversity immigrants'' (DV immigrants). The Act makes available 50,000 permanent resident visas annually to persons from countries with low rates of immigration to the United States.

The annual DV program makes permanent residence visas available to persons meeting the simple, but strict, eligibility requirements. Applicants for Diversity Visas are chosen by a computer-generated random lottery drawing. The visas, however, are distributed among six geographic regions with a greater number of visas going to regions with lower rates of immigration, and with no visas going to citizens of countries sending more than 50,000 immigrants to the U.S. in the past five years. Within each region, no one country may receive more than seven percent of the available Diversity Visas in any one year.

For DV–2005, natives of the following countries are *not* eligible to apply because they sent a total of more than 50,000 immigrants to the U.S. in the previous five years (the term ''country'' in this notice includes countries, economies and other jurisdictions explicitly listed beginning on page 15).

Canada, China (mainland-born), Colombia, Dominican Republic, El Salvador, Haiti, India, Jamaica, Mexico, Pakistan, Philippines, Russia, South Korea, United Kingdom (except Northern Ireland) and its dependent territories, and Vietnam. *Persons born in Hong Kong SAR, Macau SAR and Taiwan are eligible*

Application Submission Dates

Entries for the DV–2005 Diversity Visa Lottery must be submitted electronically between Saturday, November 1, 2003 and Tuesday, December 30, 2003. Applicants may access the electronic Diversity Visa entry form at www.dvlottery.state.gov during the 60-day registration period beginning November 1. Paper entries will not be accepted.

Requirements For Entry

- Applicant must be a native of one of the countries listed beginning on page 10. See ''List of Countries by Region Whose Natives Qualify.''

Native of a country whose natives qualify: In most cases this means the country in which the applicant was born. However, if a person was born in a country whose natives are ineligible but his or her spouse was born in a country whose natives are eligible, such person can claim the spouse's country of birth providing both the applicant and spouse are issued visas and enter the U.S. simultaneously. If a person was born in a country whose natives are ineligible, but neither of his or her parents was born there or resided there at the time of the birth, such person may be able to claim nativity in the country of birth of one of the parents.

- Applicants must meet either the education or training requirement of the DV program.

Education or Training: An applicant must have EITHER a high school education or its equivalent, defined as successful completion of a 12-year course of elementary and secondary education; OR two years of work experience within the past five years in an occupation requiring at least two years of training or experience to perform. The U.S. Department of Labor's O*Net OnLine database will be used to determine qualifying work experience. Applicants will also find a link to a Labor Department list of qualifying occupations at the Consular Affairs Web site: *http://www.travel.state.gov.*

If the applicant cannot meet these requirements, he or she should NOT submit an entry to the DV program.

Procedures for Submitting an Entry to DV–2005

- All entries by an applicant will be disqualified if more than ONE entry for the applicant is received, regardless of who submitted the entry. Applicants may prepare and submit their own entries, or have someone submit the entry for them.
- For the DV–2005 Program, the Department of State for the first time will only accept completed Electronic Diversity Visa Entry Forms submitted electronically at *http://www.dvlottery.state.gov* during a lengthened 60 day registration period beginning November 1, 2003.

• Also for the first time, the Department of State will send DV lottery entrants an electronic confirmation notice upon receipt of a completed EDV Entry Form.

• The entry will be disqualified if all required photos are not attached. Recent photographs of the applicant and his or her spouse and each child under 21 years of age, including all natural children as well as all legally-adopted and stepchildren, excepting a child who is already a U.S. citizen or a Legal Permanent Resident, even if a child no longer resides with the applicant or is not intended to immigrate under the DV program, must be submitted electronically with the Electronic Diversity Visa Entry Form. Group or family photos will not be accepted; there must be a separate photo for each family member.

Each applicant, his/her spouse, and each child will therefore need a computer file containing his/her digital photo (image) which will be submitted on-line with the EDV Entry Form. The image file can be produced either by taking a new digital photograph or by scanning a photographic print with a digital scanner.

If the submitted digital images do not conform to the following specifications, the system will automatically reject the EDV Entry Form and notify the sender.

• The image must be in the Joint Photographic Experts Group (JPEG) format.

• The image must be either in color or grayscale; monochrome images (2-bit color depth) will not be accepted.

• If a new digital photograph is taken, it must have a resolution of 320 pixels wide by 240 pixels high, and a color depth of either 24-bit color, 8-bit color, or 8-bit grayscale.

• If a photographic print is scanned, the print must be 2 inches by 2 inches (50mm x 50mm) square. It must be scanned at a resolution of 150 dots per inch (dpi) and with a color depth of either 24-bit color, 8-bit color, or 8-bit grayscale.

• The maximum image size accepted will be sixty-two thousand five hundred (62,500) bytes.

If the submitted digital images do not conform to the following specifications, the entry will be disqualified:

• Applicant, spouse, or child must be directly facing the camera; the head of the person being photographed should not be tilted up, down or to the side, and should cover about 50% of the area of the photo.

• The photo should be taken with the person being photographed in front of a neutral, light-colored background. Photos taken with very dark or patterned, busy backgrounds will not be accepted.

• Photos in which the face of the person being photographed is not in focus will not be accepted.

• Photos in which the person being photographed is wearing sunglasses or other paraphernalia which detracts from the face will not be accepted.

• Photos of applicants wearing head coverings or hats are only acceptable due to religious beliefs, and even then, may not obscure any portion of the face of the applicant. Photos of applicants with tribal or other headgear not specifically religious in nature are not acceptable. Photos of military, airline or other personnel wearing hats will not be accepted.

Information Required for the Electronic Entry

There is only one way to enter the DV–2005 lottery. Applicants must submit an Electronic Diversity Visa Entry Form (EDV Entry Form), which is accessible only at *www.dvlottery.state.gov.* Failure to complete the form in its entirety will disqualify the applicant's entry. Applicants will be asked to submit the following information on the EDV Entry Form.

1. FULL NAME, Last/Family Name, First Name, Middle name.
2. DATE OF BIRTH, Day, Month, Year.
3. GENDER, Male or Female.
4. CITY/TOWN OF BIRTH.
5. COUNTRY OF BIRTH, The name of the country should be that which is currently in use for the place where the applicant was born.
6. APPLICANT PHOTOGRAPH, (See pages 3 and 4 for information on photo specifications).
7. MAILING ADDRESS, Address, City/Town, District/Country/Province/State, Postal. Code/Zip Code, Country.
8. PHONE NUMBER (optional).
9. E-MAIL ADDRESS (optional).
10. COUNTRY OF ELIGIBILITY IF THE APPLICANT'S NATIVE COUNTRY IS DIFFERENT FROM COUNTRY OF BIRTH, If the applicant is claiming nativity in a country other than his or her place of birth, that information must be submitted on the entry. If an applicant is claiming nativity through spouse or parent, please indicate that on the entry.
11. MARRIAGE STATUS, Yes or No.
12. NUMBER OF CHILDREN THAT ARE UNMARRIED AND UNDER 21 YEARS OF AGE.
13. SPOUSE INFORMATION, Name, Date of Birth, Gender, City/Town of Birth, Country of Birth, Photograph.
14. CHILDREN INFORMATION, Name, Date of Birth, Gender, City/Town of Birth, Country of Birth, Photograph.

Note: Entries must include the name, date and place of birth of the applicant's spouse and all natural children, as well as all legally-adopted and stepchildren who are unmarried and under the age of 21 years, excepting those children who are already U.S. citizens or legal permanent residents, even if they are no longer legally married to the child's parent, and even if the spouse or child does not currently reside with the applicant and/or will not immigrate with the applicant. Note that married children and children 21 years or older will not qualify for the diversity visa. Failure to list all children will result in the applicant's disqualification for the visa. (See question 11 on the list of Frequently Asked Questions.)

Selection of Applicants

Applicants will be selected at random by computer from among all qualified entries. Those selected will be notified by mail between May and July 2004 and will be provided further instructions, including information on fees connected with immigration to the U.S.

Persons not selected will *not* receive any notification. U.S. embassies and consulates will not be able to provide a list of successful applicants. Spouses and unmarried children under age 21 of successful applicants may also apply for visas to accompany or follow to join the principal applicant. DV–2005 visas will be issued between October 1, 2004 and September 30, 2005.

In order to actually receive a visa, applicants selected in the random drawing must meet *all* eligibility requirements under U.S. law. Processing of entries and issuance of diversity visas to successful applicants and their eligible family members *must* occur by midnight on September 30, 2005. Under no circumstances can diversity visas be issued or adjustments approved after this date, nor can family members obtain diversity visas to follow to join the applicant in the U.S. after this date.

Important Notice

No fee is charged to enter the annual DV program. The U.S. Government employs no outside consultants or private services to operate the DV program. Any intermediaries or others who offer assistance to prepare DV casework for applicants do so without the authority or consent of the U.S. Government. Use of any outside intermediary or assistance to prepare a DV entry is entirely at the applicant's discretion.

A qualified entry submitted electronically directly by an applicant has an equal chance of being selected by the computer at the Kentucky Consular

Center, as does an entry submitted electronically through a paid intermediary who completes the entry for the applicant. Every entry received during the lottery registration period will have an equal random chance of being selected within its region. However, receipt of more than one entry per person will disqualify the person from registration, regardless of the source of that entry.

Frequently Asked Questions About DV Registration

1. What does the term ''native'' mean? Are there any situations in which persons who were not born in a qualifying country may apply?

''Native'' ordinarily means someone born in a particular country, regardless of the individual's current country of residence or nationality. But for immigration purposes ''native'' can also mean someone who is entitled to be ''charged'' to a country other than the one in which he or she was born under the provisions of Section 202(b) of the Immigration and Nationality Act.

For example, if a principal applicant was born in a country that is not eligible for this year's DV program, he or she may claim ''chargeability'' to the country where his or her derivative spouse was born, but he or she will not be issued a DV–1 unless the spouse is also eligible for and issued a DV–2, and both must enter the U.S. together on the DVs. In a similar manner, a minor dependent child can be ''charged'' to a parent's country of birth.

Finally, any applicant born in a country ineligible for this year's DV program can be ''charged'' to the country of birth of either parent as long as neither parent was a resident of the ineligible country at the time of the applicant's birth. In general, people are not considered residents of a country in which they were not born or legally naturalized if they are only visiting the country temporarily or stationed in the country for business or professional reasons on behalf of a company or government. An applicant who claims alternate chargeability *must* include information to that effect on the application for registration.

2. Are there any changes or new requirements in the application procedures for this diversity visa registration?

All DV–2005 lottery entries must be submitted electronically at www.dvlottery.state.gov between Saturday, November 1, 2003 and Tuesday, December 30, 2003. No paper entries will be accepted.

The Department of State implemented an electronic registration system in order to make the Diversity Visa process more efficient and secure. The Department will utilize special technology and other means to identify applicants who commit fraud for the purposes of illegal immigration or who submit multiple applications.

The signature requirement on the DV entry has been eliminated and the DV–2005 Diversity Immigrant Visa Program registration period will run from November 1 through December 30. The other major change from last year is that natives of Russia will not be eligible to apply for a diversity visa. (Please see Question 4 below for a description of why natives of certain countries do not qualify for the DV Program.)

3. Are signatures and photographs required for each family member, or only for the principal applicant?

Signatures are not required on the Electronic Diversity Visa Entry Form. Recent and individual photos of the applicant, his or her spouse and all children under 21 years of age are required. Family or group photos are not accepted. Check the information on the photo requirements on page 2 of this bulletin.

4. Why do natives of certain countries *not* qualify for the diversity program?

Diversity visas are intended to provide an immigration opportunity for persons from countries other than the countries that send large numbers of immigrants to the U.S. The law states that no diversity visas shall be provided for natives of ''high admission'' countries. The law defines this to mean countries from which a total of 50,000 persons in the Family-Sponsored and Employment-Based visa categories immigrated to the United States during the previous five years. Each year, the Bureau of Citizenship and Immigration Services (BCIS) adds the family and employment immigrant admission figures for the previous five years in order to identify the countries whose natives must be excluded from the annual diversity lottery. Because there is a separate determination made before each annual DV entry period, the list of countries whose natives do not qualify may change from one year to the next.

5. What is the numerical limit for DV–2005?

By law, the U.S. diversity immigration program makes available a maximum of 55,000 permanent residence visas each year to eligible persons. However, the Nicaraguan Adjustment and Central American Relief Act (NACARA) passed by Congress in November 1997 stipulates that beginning as early as DV–99, and for as long as necessary, 5,000 of the 55,000 annually-allocated diversity visas will be made available for use under the NACARA program. The actual reduction of the limit to 50,000 began with DV–2000 and remains in effect for the DV–2005 program.

6. What are the Regional Diversity Visa (DV) limits for DV–2005?

The Bureau of Citizenship and Immigration Services (BCIS) determines the DV regional limits for each year according to a formula specified in Section 203(c) of the Immigration and Nationality Act (INA). Once the BCIS has completed the calculations, the regional visa limits will be announced.

7. When will entries for the DV–2005 program be accepted?

The DV–2005 entry period will begin on Saturday, November 1, 2003 and will last for 60 days through Tuesday, December 30, 2003. Each year millions apply for the program during the registration period. The massive volume of entries creates an enormous amount of work in selecting and processing successful applicants. Holding the entry period during November and December will ensure successful applicants are notified in a timely manner, and gives both them and our embassies and consulates time to prepare and complete entries for visa issuance.

8. May persons who are in the U.S. apply for the program?

Yes, an applicant may be in the U.S. or in another country, and the entry may be submitted from the U.S. or from abroad.

9. Is each applicant limited to only one entry during the annual DV registration period?

Yes, the law allows only one entry by or for each person during each registration period; *applicants for whom more than one entry is submitted will be disqualified.* The Department of State will employ sophisticated technology and other means to identify individuals that submit multiple entries during the registration period. Applicants submitting more than one entry will be disqualified and an electronic record will be permanently maintained by the Department of State. Applicants may apply for the program each year during the regular registration period.

10. May a husband and a wife each submit a separate entry?

Yes, a husband and a wife may each submit one entry, if each meets the eligibility requirements. If either were selected, the other would be entitled to derivative status.

11. What family members must I include on my DV entry?

On your entry you must list your spouse, that is, husband or wife, and all unmarried children under 21 years of age, with the exception of a child who

is already a U.S. citizen or a Legal Permanent Resident. You must list your spouse even if you are currently separated from him or her. However, if you are legally divorced, you do not need to list your former spouse. For customary marriages, the important date is the date of the original marriage ceremony, *not* the date on which the marriage is registered. You must list ALL your children who are unmarried and under the age of 21 years, whether they are your natural children, your spouse's children by a previous marriage, or children you have formally adopted in accordance with the laws of your country, unless a child is already a U.S. citizen or Legal Permanent Resident. List all children under 21 years of age even if they no longer reside with you or you do not intend for them to immigrate under the DV program.

The fact that you have listed family members on your entry does not mean that they later must travel with you. They may choose to remain behind. However, if you include an eligible dependent on your visa application forms that you failed to include on your original entry, your case will be disqualified. (This only applies to persons who were dependents at the time the original application was submitted, not those acquired at a later date.) Your spouse may still submit a separate entry, even though he or she is listed on your entry, as long as both entries include details on all dependents in your family. See question 10 above.

12. Must each applicant submit his or her own entry, or may someone act on behalf of an applicant?

Applicants may prepare and submit their own entries, or have someone submit the entry for them. Regardless of whether an entry is submitted by the applicant directly, or assistance is provided by an attorney, friend, relative, etc., only one entry may be submitted in the name of each person. If the entry is selected, the notification letter will be sent *only* to the mailing address provided on the entry.

13. What are the requirements for education or work experience?

The law and regulations require that every applicant must have at least a high school education or its equivalent or, within the past five years, have two years of work experience in an occupation requiring at least two years training or experience. A ''high school education or equivalent'' is defined as successful completion of a twelve-year course of elementary and secondary education in the United States or successful completion in another country of a formal course of elementary and secondary education comparable to a high school education in the United States. Documentary proof of education or work experience should not be submitted with the lottery entry, but must be presented to the consular officer at the time of the visa interview. To determine eligibility based on work experience, definitions from the Department of Labor's O*Net OnLine database will be used.

14. How will successful entrants be selected?

At the Kentucky Consular Center, all entries received *from each region will be individually numbered*. After the end of the registration period, a computer will randomly select entries from among all the entries received for each geographic region. Within each region, the first entry randomly selected will be the first case registered, the second entry selected the second registration, etc. All entries received during the registration period will have an equal chance of being selected within each region. When an entry has been selected, the applicant will be sent a notification letter by the Kentucky Consular Center, which will provide visa application instructions. The Kentucky Consular Center will continue to process the case until those who are selected are instructed to appear for visa interviews at a U.S. consular office, or until those able to do so apply at a BCIS office in the United States for change of status.

15. May winning applicants adjust their status with BCIS?

Yes, provided they are otherwise eligible to adjust status under the terms of Section 245 of the INA, selected applicants who are physically present in the United States may apply to the Bureau of Citizenship and Immigration Services (BCIS) for adjustment of status to permanent resident. Applicants must ensure that BCIS can complete action on their cases, including processing of any overseas derivatives, before September 30, 2005, since on that date registrations for the DV–2005 program expire. No visa numbers for the DV–2005 program will be available after midnight on September 30, 2005 under any circumstances.

16. Will applicants who are not selected be informed?

No, applicants who are not selected will receive no response to their entry. Only those who are selected will be informed. All notification letters are sent within about nine months of the end of the application period to the address indicated on the entry. Anyone who does not receive a letter will know that his or her application has not been selected.

17. How many applicants will be selected?

There are 50,000 DV visas available for DV–2005, but more than that number of individuals will be selected. Because it is likely that some of the first 50,000 persons who are selected will not qualify for visas or pursue their cases to visa issuance, more than 50,000 entries will be selected by the Kentucky Consular Center to ensure that all of the available DV visas are issued. However, this also means that there will not be a sufficient number of visas for all those who are initially selected. All applicants who are selected will be informed promptly of their place on the list. Interviews with those selected will begin in early October 2004. The Kentucky Consular Center will send appointment letters to selected applicants four to six weeks before the scheduled interviews with U.S. consular officers at overseas posts. Each month visas will be issued, visa number availability permitting, to those applicants who are ready for issuance during that month. Once all of the 50,000 DV visas have been issued, the program for the year will end. In principle, visa numbers could be finished before September 2005. Selected applicants who wish to receive visas must be prepared to act promptly on their cases. Random selection by the Kentucky Consular Center computer does not automatically guarantee that you will receive a visa.

18. Is there a minimum age for applicants to apply for the DV Program?

There is no minimum age to apply for the program, but the requirement of a high school education or work experience for each principal applicant at the time of application will effectively disqualify most persons who are under age 18.

19. Are there any fees for the DV Program?

There is no fee for submitting an entry. A special DV case processing fee will be payable later by persons whose entries are actually selected and processed at a U.S. consular section for this year's program. DV applicants, like other immigrant visa applicants, must also pay the regular visa fees at the time of visa issuance. Details of required fees will be included with the instructions sent by the Kentucky Consular Center to applicants who are selected.

20. Are DV applicants specially entitled to apply for a waiver of any of the grounds of visa ineligibility?

No. Applicants are subject to all grounds of ineligibility for immigrant visas specified in the Immigration and Nationality Act. There are no special provisions for the waiver of any ground

of visa ineligibility other than those ordinarily provided in the Act.

21. May persons who are already registered for an immigrant visa in another category apply for the DV Program?

Yes, such persons may apply for the DV program.

22. How long do applicants who are selected remain entitled to apply for visas in the DV Category?

Persons selected in the DV–2005 lottery are entitled to apply for visa issuance only during fiscal year 2005, *i.e.*, from October 2004 through September 2005. Applicants must obtain the DV visa or adjust status by the end of the Fiscal Year (September 30, 2005). There is no carry-over of DV benefits into the next year for persons who are selected but who do not obtain visas during FY–2005. Also, spouses and children who derive status from a DV–2005 registration can only obtain visas in the DV category between October 2004 and September 2005. Applicants who apply overseas will receive an appointment letter from the Kentucky Consular Center four to six weeks before the scheduled appointment.

List Of Countries by Region Whose Natives Qualify

The lists below show the countries whose natives are QUALIFIED within each geographic region for this diversity program. The determination of countries within each region is based on information provided by the Geographer of the Department of State. The countries whose natives do not qualify for the DV–2005 program were identified by the Bureau of Citizenship and Immigration Services (BCIS) according to the formula in Section 203(c) of the Immigration and Nationality Act. Dependent areas overseas are included within the region of the governing country. The countries whose natives do NOT qualify for this diversity program (because they are the principal source countries of Family-Sponsored and Employment-Based immigration, or ''high admission'' countries) are noted in parentheses after the respective regional lists.

Africa

Algeria
Angola
Benin
Botswana
Burkina Faso
Burundi
Cameroon
Cape Verde
Central African Republic
Chad
Comoros
Congo
Congo, Democratic Republic of the Cote D'Ivoire (Ivory Coast)
Djibouti
Egypt
Equatorial Guinea
Eritrea
Ethiopia
Gabon
Gambia, The
Ghana
Guinea
Guinea-Bissau
Kenya
Lesotho
Liberia
Libya
Madagascar
Malawi
Mali
Mauritania
Mauritius
Morocco
Mozambique
Namibia
Niger
Nigeria
Rwanda
Sao Tome and Principe
Senegal
Seychelles
Sierra Leone
Somalia
South Africa
Sudan
Swaziland
Tanzania
Togo
Tunisia
Uganda
Zambia
Zimbabwe

Asia

Afghanistan
Bahrain
Bangladesh
Bhutan
Brunei
Burma
Cambodia
East Timor
Hong Kong Special Administrative Region
Indonesia
Iran
Iraq
Israel
Japan
Jordan
Kuwait
Laos
Lebanon
Malaysia
Maldives
Mongolia
Nepal
North Korea
Oman
Qatar
Saudi Arabia
Singapore
Sri Lanka
Syria
Taiwan
Thailand
United Arab Emirates
Yemen

Natives of the following Asian countries do not qualify for this year's diversity program: China [mainland-born], India, Pakistan, South Korea, Philippines, and Vietnam. The Hong Kong S.A.R and Taiwan do qualify and are listed above. Macau S.A.R. also qualifies and is listed below.

Europe

Albania
Andorra
Armenia
Austria
Azerbaijan
Belarus
Belgium
Bosnia and Herzegovina
Bulgaria
Croatia
Cyprus
Czech Republic
Denmark (including components and dependent areas overseas)
Estonia
Finland
France (including components and dependent areas overseas)
Georgia
Germany
Greece
Hungary
Iceland
Ireland
Italy
Kazakhstan
Kyrgyzstan
Latvia
Liechtenstein
Lithuania
Luxembourg
Macau Special Administrative Region
Macedonia, the Former Yugoslav Republic
Malta
Moldova
Monaco
Netherlands (including components and dependent areas overseas)
Northern Ireland
Norway
Poland
Portugal (including components and dependent areas overseas)
Romania
San Marino
Serbia and Montenegro
Slovakia
Slovenia

Spain
Sweden
Switzerland
Tajikistan
Turkey
Turkmenistan
Ukraine
Uzbekistan
Vatican City

Natives of the following European countries do not qualify for this year's diversity program: Great Britain and Russia. Great Britain (United Kingdom) includes the following dependent areas: Anguilla, Bermuda, British Virgin Islands, Cayman Islands, Falkland Islands, Gibraltar, Montserrat, Pitcairn, St. Helena, Turks and Caicos Islands. **Note** that for purposes of the diversity program only, Northern Ireland is treated separately; Northern Ireland does qualify and is listed among the qualifying areas.

North America

The Bahamas

In North America, natives of Canada and Mexico do not qualify for this year's diversity program.

Oceania

Australia (including components and dependent areas overseas)
Fiji
Kiribati
Marshall Islands
Micronesia, Federated States of Nauru
New Zealand (including components and dependent areas overseas)
Palau
Papua New Guinea
Solomon Islands
Tonga
Tuvalu
Vanuatu
Samoa

South America, Central America, and the Caribbean

Antigua and Barbuda
Argentina
Barbados
Belize
Bolivia
Brazil
Chile
Costa Rica
Cuba
Dominica
Ecuador
Grenada
Guatemala
Guyana
Honduras
Nicaragua
Panama
Paraguay
Peru
Saint Kitts and Nevis
Saint Lucia
Saint Vincent and the Grenadines
Suriname
Trinidad and Tobago
Uruguay
Venezuela

Countries in this region whose natives do not qualify for this year's diversity program: Colombia, Dominican Republic, El Salvador, Haiti, Jamaica, and Mexico.

Dated: August 21, 2003.

Maura Harty,

Assistant Secretary for Consular Affairs, Department of State.

[FR Doc. 03–21908 Filed 8–26–03; 8:45 am]

BILLING CODE 4710–06–P

DEPARTMENT OF STATE

[Public Notice 4459]

Bureau of Oceans and International Environmental and Scientific Affairs (OES); Plan of Action To Be Established Through the U.S.-Singapore Memorandum of Intent on Cooperation in Environmental Matters

AGENCY: Department of State.

ACTION: Notice and request for comments.

SUMMARY: The Department of State, through its Bureau of Oceans and International Environmental and Scientific Affairs, is providing notice that, in accordance with the terms of a U.S.-Singapore Memorandum of Intent on Cooperation in Environmental Matters (MOI), the two governments intend to devise a Plan of Action setting out initial cooperative projects to be pursued. In this notice the Department of State is requesting written comments from the public regarding priority areas for bilateral and regional environmental cooperation with the Republic of Singapore. In preparing comments, the public is encouraged to make reference to the MOI (available at: *http://www.state.gov/g/oes/rls/or/22193.htm*) and to the Final Environment Review of the U.S.-Singapore Free Trade Agreement (available at: *http://www.ustr.gov*).

DATES: To guarantee receipt in proper time for consideration prior to the meeting, comments are requested as soon as possible but not later than thirty days after the publication of this notice.

ADDRESSES: Comments may be sent by fax to (202) 647–5947 or 202–647–1052, or by e-mail to *richardcj@state.gov.*

FOR FURTHER INFORMATION CONTACT: Chris Richard, Department of State, Bureau of Oceans and International Environmental and Scientific Affairs, Office of Environmental Policy, telephone 202–647–4548, e-mail *richardcj@state.gov.*

SUPPLEMENTARY INFORMATION: On May 6, 2003 the governments of the United States and the Republic of Singapore signed a Free Trade Agreement in which both governments recognized the importance of strengthening capacity to protect the environment and to promote sustainable development in concert with the strengthening of trade and investment relations. The Parties agreed to pursue, as appropriate, cooperative environmental activities under a Memorandum of Intent on Cooperation in Environmental Matters (MOI). In the MOI, signed on June 13, 2003, the United States and the Republic of Singapore agreed to pursue cooperative environmental activities, including those pertinent to trade and investment and to strengthening environmental performance. This commitment was made to further the objectives of the Trade Act of 2002, including Section 2101(c)(3), which calls upon the President to ''seek to establish consultative mechanisms among parties to trade agreements to strengthen the capacity of the United States trading partners to develop and implement standards for the protection of the environment and human health based on sound science.'' (Further information on the negotiation of free trade agreements or on the Trade Act of 2002 can be found at the Internet site of the Office of the U.S. Trade Representative, *http://www.ustr.gov.*)

In the MOI the governments expressed their intent to meet at least biennially to review the status of environmental cooperation activities. At the first of these meetings, they intend to devise a Plan of Action setting out initial cooperative bilateral, and, where appropriate, regional projects to be pursued. The MOI sets out a number of general areas under which the two governments may cooperate, including promotion of environmental management, exchange of information on environmental best practices, exploring avenues for technological cooperation, and promoting improved natural resource management and endangered species conservation. In devising the Plan of Action the governments of the United States and Singapore will develop a consensus on more specific objectives based upon further consideration of mutual environmental priorities and resources. Public comment is invited on potential cooperative projects and activities, particularly on ways in which non-

government organizations or business groups might be involved through public-private partnerships.

Dated: August 22, 2003.

Robert Ford,

Acting Director, Office of Environmental Policy, Bureau of Oceans and International Environmental and Scientific Affairs, Department of State.

[FR Doc. 03–21909 Filed 8–26–03; 8:45 am]

BILLING CODE 4710–09–P

TENNESSEE VALLEY AUTHORITY

Paperwork Reduction Act of 1995, as Amended by Public Law 104–13; Proposed Collection, Comment Request

AGENCY: Tennessee Valley Authority.

ACTION: Proposed collection; Comment request.

SUMMARY: The proposed information collection described below will be submitted to the Office of Management and Budget (OMB) for review, as required by the Paperwork Reduction Act of 1995 (44 U.S.C. chapter 35, as amended). The Tennessee Valley Authority is soliciting public comments on this proposed collection as provided by 5 CFR 1320.8(d)(1). Requests for information, including copies of the information collection proposed and supporting documentation, should be directed to the Agency Clearance Officer: Wilma H. McCauley, Tennessee Valley Authority, 1101 Market Street (EB 5B), Chattanooga, Tennessee 37402–2801; (423) 751–2523. (SC: 0001MYJ). Comments should be sent to the Agency Clearance Officer no later than October 27, 2003.

SUPPLEMENTARY INFORMATION:

Type of Request: Regular submission.

Title of Information Collection: Foreign Line Crossing Data.

Frequency of Use: On occasion.

Type of Affected Public: State or local governments, small businesses or organizations, businesses or other for-profit.

Small Businesses or Organizations Affected: Yes.

Federal Budget Functional Category Code: 271.

Estimated Number of Annual Responses: 100.

Estimated Total Annual Burden Hours: 1000.

Estimated Average Burden Hours Per Response: 10.

Need For and Use of Information: When a company wishes to build a line over or under a power transmission line owned by TVA, TVA must review certain engineering data to ensure reliability of the power system and to protect the public by ensuring that the crossing meets the National Electrical Safety Code. The information collection provides such engineering data.

Jacklyn J. Stephenson,

Senior Manager, Enterprise Operations, Information Services.

[FR Doc. 03–21868 Filed 8–26–03; 8:45 am]

BILLING CODE 8120–08–P

DEPARTMENT OF TRANSPORTATION

Federal Aviation Administration

RTCA Special Committee 159: Global Positioning System (GPS)

AGENCY: Federal Aviation Administration (FAA), DOT.

ACTION: Notice of RTCA Special Committee 159 meeting.

SUMMARY: The FAA is issuing this notice to advise the public of a meeting of RTCA Special Committee 159: Global Positioning System.

DATES: The meeting will be held September 15–19, 2003, from 9 a.m. to 4:30 p.m. (unless stated otherwise).

ADDRESSES: The meeting will be held at RTCA, Inc., 1828 L Street, NW., Suite 805, Washington, DC 20036.

FOR FURTHER INFORMATION CONTACT: RTCA Secretariat, 1828 L Street, NW., Suite 805, Washington, DC, 20036; telephone (202) 833–9339; fax (202) 833–9434; Web site *http://www.rtca.org.*

SUPPLEMENTARY INFORMATION: Pursuant to section 10(a)(2) of the Federal Advisory Committee Act (Pub. L. 92–463, 5 U.S.C., appendix 2), notice is hereby given for a Special Committee 159 meeting. *Note: Special working group sessions will be held September 15, 16, 17, and 18.* The plenary agenda will include:

- September 19:
- Opening Plenary Session (Welcome and Introductory Remarks, Approve Minutes of Previous Meeting)
- Review Working Group Progress and Identify Issues for Resolution
- Global Positioning System (GPS)/3rd Civil Frequency (WG–1)
- GPS/Wide Area Augmentation System (WAAS)(WG–2)
- GPS/GLONASS (WG–2A)
- GPS/Inertial (WG–2C)
- GPS/Precision Landing Guidance (WG–4)
- GPS/Airport Surface Surveillance (WG–5)
- GPS/Interference (WG–6)
- Review of EUROCAE activities
- Closing Plenary Session (Assignment/Review of Future Work, Other Business, Date and Place of Next Meeting)

Attendance is open to the interested public but limited to space availability. With the approval of the chairmen, members of the public may present oral statements at the meeting. Persons wishing to present statements or obtain information should contact the person listed in the **FOR FURTHER INFORMATION CONTACT** section. Members of the public may present a written statement to the committee at any time.

Dated: Issued in Washington, DC, on August 15, 2003.

Robert Zoldos,

FAA Systems Engineer, RTCA Advisory Committee.

[FR Doc. 03–21961 Filed 8–26–03; 8:45 am]

BILLING CODE 4910–13–M

DEPARTMENT OF TRANSPORTATION

Federal Aviation Administration

RTCA Special Committee 186: Automatic Dependent Surveillance—Broadcast (ADS–B)

AGENCY: Federal Aviation Administration (FAA), DOT.

ACTION: Notice of RTCA Special Committee 186 meeting.

SUMMARY: The FAA is issuing this notice to advise the public of a meeting of RTCA Special Committee 186: Automatic Dependent Surveillance—Broadcast (ADS–B).

DATES: The meeting will be held September 15–18, 2003, starting at 9 a.m. (unless stated otherwise).

ADDRESSES: The meeting will be held at RTCA, Inc., 1828 L Street, NW., Suite 805, Washington, DC 20036.

FOR FURTHER INFORMATION CONTACT: RTCA Secretariat, 1828 L Street, NW., Suite 805, Washington, DC 20036; telephone (202) 833–9339; fax (202) 833–9434; Web site *http://www.rtca.org.*

SUPPLEMENTARY INFORMATION: Pursuant to section 10(a)(2) of the Federal Advisory Committee Act (Pub. L. 92–463, 5 U.S.C., appendix 2), notice is hereby given for a Special Committee 186 meeting. *Note: Specific working group sessions will be held on September 15, 16, and 17.* The plenary agenda will include:

September 18

- Opening Plenary Session (Chairman's Introductory Remarks, Review of Meeting Agenda, Review/Approval of Previous Meeting Summary)
- SC–186 Activity Reports
  - WG–1, Operations & Implementation

- WG–2, Traffic Information Service—Broadcast (TIS–B)
- WG–3, 1090 MHz Minimum Operational Performance Standard (MOPS)
- WG–4, Application Technical Requirements
- WG–5, Universal Access Transceiver (UAT) MOPS
- WG–6, Automatic Dependent Surveillance-Broadcast (ADS–B) Minimum Aviation System Performance Standards (MASPS)
- EUROCAE WG–51 Activity Report
- Review ASA MASPS
- Closing Plenary Session (Date, Place and Time of Next Meeting, Other Business, Review Actions Items/Work Program, Adjourn)

Attendance is open to the interested public but limited to space availability. With the approval of the chairmen, members of the public may present oral statements at the meeting. Persons wishing to present statements or obtain information should contact the person listed in the **FOR FURTHER INFORMATION CONTACT** section. Members of the public may present a written statement to the committee at any time.

Issued in Washington, DC, on August 15, 2003.

Robert Zoldos,

FAA Systems Engineer, RTCA Advisory Committee.

[FR Doc. 03–21962 Filed 8–26–03; 8:45 am]

BILLING CODE 4910–13–M

DEPARTMENT OF TRANSPORTATION

Federal Aviation Administration

Notice of Intent To Rule on Application 03–02–U–00–PIT To Use the Revenue From a Passenger Facility Charge (PFC) at Pittsburgh International Airport, Pittsburgh, PA

AGENCY: Federal Aviation Administration (FAA), DOT.

ACTION: Notice of intent to rule on application.

SUMMARY: The FAA proposes to rule and invites public comment on the application to use the revenue from a PFC at Pittsburgh International Airport under the provisions of the 49 U.S.C. 40117 and part 158 of the Federal Aviation Regulations (14 CFR part 158).

DATES: Comments must be received on or before September 26, 2003.

ADDRESSES: Comments on this application may be mailed or delivered in triplicate to the FAA at the following address: Ms. Lori Ledebohm, Community Planner/PFC Contact, Harrisburg Airports District Office, 3905 Hartzdale Drive, Suite 508, Camp Hill, PA 17011.

In addition, one copy of any comments submitted to the FAA must be mailed or delivered to John R. Serpa of Allegheny County Airport Authority at the following address: 1000 Airport Blvd., P.O. Box 12370, Pittsburgh, PA 15231–0370.

Air carriers and foreign air carriers may submit copies of written comments previously provided to Allegheny County Airport Authority under section 158.23 of part 158.

FOR FURTHER INFORMATION CONTACT: Lori Ledebohm, Community Planner/PFC contact, Harrisburg Airports District Office, 3905 Hartzdale Drive, Suite 508, Camp Hill, PA 17011, 717–730–2835. The application may be reviewed in person at this same location.

SUPPLEMENTARY INFORMATION: The FAA proposes to rule and invites public comment on the application to use the revenue from a PFC at Pittsburgh International Airport under the provisions of the 49 U.S.C. 40117 and part 158 of the Federal Aviation Regulations (14 CFR part 158).

On August 8, 2003, the FAA determined that the application to use the revenue from a PFC submitted by Allegheny County Airport Authority was substantially complete within the requirements of section 158.25 of part 158. The FAA will approve or disapprove the application, in whole or in part, no later than November 7, 2003.

The following is a brief overview of the application:

Proposed charge effective date: October 1, 2001.

Proposed charge expiration date: October 1, 2006.

Level of the proposed PFC: $3.00.

Total estimated PFC revenue: $125,000.

Brief description of proposed project(s): Replace Security Fence.

Class or classes of air carriers which the public agency has requested not be required to collect PFCs: non-schedule on demand air carriers filing form 1800–31.

Any person may inspect the application in person at the FAA office listed above under **FOR FURTHER INFORMATION CONTACT** and at the FAA regional Airports office located at: Eastern Region, Airports Division, AEA–610, 1 Aviation Plaza, Jamaica, New York 11434.

In addition, any person may, upon request, inspect the application, notice and other documents germane to the application in person at the Allegheny County Airport Authority.

Issued in Camp Hill, PA on August 20, 2003.

Lori Ledebohm,

PFC Coordinator, Harrisburg Airports District Office, Eastern Region.

[FR Doc. 03–21960 Filed 8–26–03; 8:45 am]

BILLING CODE 4910–13–M

DEPARTMENT OF TRANSPORTATION

Federal Railroad Administration

Proposed Agency Information Collection Activities; Comment Request

AGENCY: Federal Railroad Administration, DOT.

ACTION: Notice and request for comments.

SUMMARY: In compliance with the Paperwork Reduction Act of 1995 (44 U.S.C. 3501 *et seq.*), this notice announces that the Information Collection Requirements (ICRs) abstracted below have been forwarded to the Office of Management and Budget (OMB) for review and comment. The ICRs describes the nature of the information collection and their expected burden. The **Federal Register** notice with a 60-day comment period soliciting comments on the following collection of information was published on June 25, 2003 (68 FR 37890).

DATES: Comments must be submitted on or before September 26, 2003.

FOR FURTHER INFORMATION CONTACT: Mr. Robert Brogan, Office of Planning and Evaluation Division, RRS–21, Federal Railroad Administration, 1120 Vermont Ave., NW., Mail Stop 17, Washington, DC 20590 (telephone: (202) 493–6292), or Debra Steward, Office of Information Technology and Productivity Improvement, RAD–20, Federal Railroad Administration, 1120 Vermont Ave., NW., Mail Stop 35, Washington, DC 20590 (telephone: (202) 493–6139). (These telephone numbers are not toll-free.)

SUPPLEMENTARY INFORMATION: The Paperwork Reduction Act of 1995 (PRA), Public Law 104–13, section 2, 109 Stat. 163 (1995) (codified as revised at 44 U.S.C. 3501–3520), and its implementing regulations, 5 CFR part 1320, require Federal agencies to issue two notices seeking public comment on information collection activities before OMB may approve paperwork packages. 44 U.S.C. 3506, 3507; 5 CFR 1320.5, 1320.8(d)(1), 1320.12. On June 25, 2003, FRA published a 60-day notice in the **Federal Register** soliciting comment on ICRs that the agency was seeking OMB

approval. 68 FR 37890. FRA received no comments in response to this notice.

Before OMB decides whether to approve this proposed collection of information, it must provide 30 days for public comment. 44 U.S.C. 3507(b); 5 CFR 1320.12(d). Federal law requires OMB to approve or disapprove paperwork packages between 30 and 60 days after the 30-day notice is published. 44 U.S.C. 3507 (b)–(c); 5 CFR 1320.12(d); *see also* 60 FR 44978, 44983, Aug. 29, 1995. OMB believes that the 30-day notice informs the regulated community to file relevant comments and affords the agency adequate time to digest public comments before it renders a decision. 60 FR 44983, Aug. 29, 1995. Therefore, respondents should submit their respective comments to OMB within 30 days of publication to best ensure having their full effect. 5 CFR 1320.12(c); *see also* 60 FR 44983, Aug. 29, 1995.

The summaries below describe the nature of the information collection requirements (ICRs) and the expected burden. The revised requirements are being submitted for clearance by OMB as required by the PRA.

Title: Hours of Service Regulations.

OMB Control Number: 2130–0005.

Type of Request: Extension of a currently approved collection.

Affected Public: Businesses.

Form(s): N/A.

Abstract: The collection of information is due to the railroad Hours of Service Regulations set forth in 49 CFR part 228 which require railroads to collect the Hours of Duty for covered employees, and records of train movements. Railroads whose employees have exceeded maximum duty limitations must report the circumstances. Also, a railroad that has developed plans for construction or reconstruction of sleeping quarters (subpart C of 49 CFR part 228) must obtain approval of the Federal Railroad Administration (FRA) by filing a petition conforming to the requirements of §§ 228.101, 228.103, and 228.105.

Annual Estimated Burden Hours: 3,294,736.

Addressee: Send comments regarding these information collections to the Office of Information and Regulatory Affairs, Office of Management and Budget, 725 Seventeenth Street, NW., Washington, DC 20503; Attention: FRA Desk Officer.

Comments are invited on the following: Whether the proposed collections of information are necessary for the proper performance of the functions of FRA, including whether the information will have practical utility; the accuracy of FRA's estimates of the burden of the proposed information collections; ways to enhance the quality, utility, and clarity of the information to be collected; and ways to minimize the burden of the collections of information on respondents, including the use of automated collection techniques or other forms of information technology.

A comment to OMB is best assured of having its full effect if OMB receives it within 30 days of publication of this notice in the **Federal Register**.

Authority: 44 U.S.C. 3501–3520.

Issued in Washington, DC, on August 22, 2003.

Kathy A. Weiner,

Director, Office of Information Technology and Support Systems, Federal Railroad Administration.

[FR Doc. 03–21963 Filed 8–26–03; 8:45 am]

BILLING CODE 4910–06–P

DEPARTMENT OF TRANSPORTATION

National Highway Traffic Safety Administration

[Docket No. NHTSA 03–15651; Notice 2]

Federal Motor Vehicle Safety Standards; Lamps, Reflective Devices, and Associated Equipment

AGENCY: National Highway Traffic Safety Administration (NHTSA), Department of Transportation (DOT).

ACTION: Extension of comment period for a notice of draft interpretations.

SUMMARY: This document extends the comment period on a notice setting forth two draft interpretations concerning how our standard on lamps, reflective devices, and associated equipment applies to replacement equipment. In response to a petition from the Specialty Equipment Market Association (SEMA), the agency is granting the petition and extending the comment period 30 days, from September 2, 2003, to October 2, 2003. The reason for the extension is to give SEMA sufficient time to ''craft coordinated responses on behalf of the many SEMA members that produce aftermarket lighting equipment.'' SEMA requested that the comment period be extended by 30 days.

DATES: You should submit comments early enough to ensure that Docket Management receives them not later than October 2, 2003.

ADDRESSES: You may submit comments (identified by the docket number set forth above) by any of the following methods:

- Web Site: *http://dms.dot.gov.* Follow the instructions for submitting comments on the DOT electronic docket site. Please note, if you are submitting petitions electronically as a PDF (Adobe) file, we ask that the documents submitted be scanned using Optical Character Recognition (OCR) process, thus allowing the agency to search and copy certain portions of your submissions.[1]
- Fax: 1–202–493–2251.
- Mail: Docket Management Facility, U.S. Department of Transportation, 400 Seventh Street, SW., Nassif Building, Room PL–401, Washington, DC 20590–001.
- Hand Delivery: Room PL–401 on the plaza level of the Nassif Building, 400 Seventh Street, SW., Washington, DC, between 9 a.m. and 5 p.m., Monday through Friday, except Federal holidays.

Instructions: All submissions must include the agency name and docket number. For detailed instructions on submitting comments, see the Submission of Comments heading of the Supplementary Information section of this document. Note that all comments received will be posted without change to *http://dms.dot.gov,* including any personal information provided. Please see the Privacy Act heading under Regulatory Notices.

Docket: For access to the docket to read background documents or comments received, go to *http://dms.dot.gov* at any time or to Room PL–401 on the plaza level of the Nassif Building, 400 Seventh Street, SW., Washington, DC, between 9 a.m. and 5 p.m., Monday through Friday, except Federal holidays.

FOR FURTHER INFORMATION CONTACT: Taylor Vinson, Office of Chief Counsel, National Highway Traffic Safety Administration, 400 Seventh Street, SW., Washington, DC 20590, Telephone: (202) 366–5263, Fax: (202) 366–3820.

SUPPLEMENTARY INFORMATION: On July 17, 2003, the agency published a notice requesting comments on two draft interpretations in response to questions whether replacement lamps for the rear of a vehicle may have the reflex reflectors in a location that is inboard from that in the original lamps, and whether light source modifications are permissible for aftermarket lamps (68 FR 42454). The draft letters would be interpretations of Federal Motor Vehicle Safety Standard No. 108, *Lamps, Reflective Devices, and Associated Equipment.* We provided a comment period of 45 days, until the close of business on September 2, 2003.

[1] Optical character recognition (OCR) is the process of converting an image of text, such as a scanned paper document or electronic fax file, into computer-editable text.

On August 15, 2003, the Specialty Equipment Market Association (SEMA) petitioned the agency to extend the comment period for an additional 30 days. SEMA explained that it had been ''attempting to craft coordinated responses on behalf of the many AEMA members that produce aftermarket lighting equipment.'' This undertaking ''has been complicated by the fact that most of the comment period falls in August, a time when many of these SEMA members are away from their businesses.'' In addition, the comment deadline ''falls on September 2nd, the day after Labor Day.'' SEMA considers the interpretations to be of great importance ''to the ability of SEMA members to manufacture, market and sell replacement lighting equipment in the U.S.''

After considering the arguments raised by SEMA, we have decided that it is in the public interest to extend the comment period for 30 days, to October 2, 2003, pursuant to the petitioner's request.

Privacy Act

Anyone is able to search the electronic form of all comments received into any of our dockets by the name of the individual submitting the comment (or signing the comment, if submitted on behalf of an association, business, labor union, *etc.*). You may review DOT's complete Privacy Act Statement in the **Federal Register** published on April 11, 2000 (Volume 65, Number 70; Pages 19477–78) or you may visit *http://dms.dot.gov.*

Authority: 49 U.S.C. 30111; 49 CFR 501.8(d)(5).

Issued on August 21, 2003.

Jacqueline Glassman,

Chief Counsel.

[FR Doc. 03–21840 Filed 8–26–03; 8:45 am]

BILLING CODE 4910–59–P

DEPARTMENT OF TRANSPORTATION

Research and Special Programs Administration (RSPA)

[Docket No. RSPA–98–4470]

Pipeline Safety: Technical Pipeline Safety Standards Committees; Vacancies

AGENCY: Office of Pipeline Safety, Research and Special Programs Administration, DOT.

ACTION: Notice; request for applications.

SUMMARY: The Research and Special Programs Administration's (RSPA) Office of Pipeline Safety (OPS) seeks applications for membership on the Technical Pipeline Safety Standards Committee (TPSSC) and the Technical Hazardous Liquid Pipeline Safety Standards Committee (THLPSSC). The TPSSC and the THLPSSC review and report on proposed standards relating to the transportation of gas or hazardous liquids through pipelines or of the operation of gas or hazardous liquid pipeline facilities.

DATES: Application forms should reach RSPA/OPS on or before October 15, 2003.

ADDRESSES: You may request an application form by writing to Research and Special Programs Administration, Office of Pipeline Safety (DPS–12), U.S. Department of Transportation, 400 Seventh Street, SW., Washington, DC 20590; by calling 202–493–0967; or by faxing 202–366–4566; or by e-mailing *Jean.Milam@rspa.dot.gov.* Send your application in written form to the above street address. This notice and the application form are available on the Internet at *http://dms.dot.gov* under docket number 4470.

FOR FURTHER INFORMATION CONTACT: Cheryl Whetsel, OPS, (202) 366–4431 or Richard Huriaux, OPS, (202) 366–4565, regarding the subject matter of this notice.

SUPPLEMENTARY INFORMATION: The Technical Pipeline Safety Standards Committee (TPSSC) and the Technical Hazardous Liquid Pipeline Safety Standards Committee (THLPSSC) are statutorily mandated Federal advisory committees that advise RSPA/OPS on proposed safety standards for gas and liquid pipelines. Federal law requires that RSPA/OPS submit cost-benefit analyses and risk assessment information on proposed safety standards to the advisory committees. The TPSSC and the THLPSSC evaluate the merits of the data provided and the methods used within the analyses to provide recommendations relating to the cost-benefit analyses. Both of the committees are tasked with determining reasonableness, cost-effectiveness, and practicability of RSPA/OPS proposed pipeline safety regulations. Each member must be experienced in the safety regulation of transporting natural gas or hazardous liquids or operating a hazardous liquid pipeline facility or, must be technically qualified, by training experience or knowledge, in at least one field of engineering applicable to transporting gas or hazardous liquids or operating a hazardous liquid pipeline facility.

Each Committee consists of 15 members. Five members each are selected from Federal, State, or local governmental agencies. Two of these are State Commissioners selected after consultation with representatives of the national organization of State Commissions. Five members are selected from the natural gas or hazardous liquids pipeline industry, after consultation with industry representatives. Three must be currently engaged in the active operation of pipelines and at least one of the three must have education background or experience in risk assessment and cost-benefit analysis. Five members are to be selected from the general public. Individuals selected as public members may not have a significant financial interest in the pipeline, petroleum, or natural gas industry. Two of the public members must have education, background, or experience in environmental protection or public safety, and at least one of these will have education, background or experience in risk assessment and cost-benefit analysis.

The Committees meet at least twice during each calendar year. In addition, Committee members may be polled or asked for comments on notices of proposed rulemaking or other matters at any time without formally assembling at one place.

We will consider applications for 11 positions that expire or become vacant in mid-2003 in the following categories: (a) Federal, state, or local government (1 liquid vacancy; 3 gas vacancies—one must be a Commissioner); (b) Natural Gas/Hazardous Liquid Industry (No vacancies at this time); (c) General Public (5 liquid vacancies and 2 gas vacancies).

Each member serves a 3-year term, but may be reappointed. All members serve at their own expense and receive no salary from the Federal Government, although travel reimbursement and per diem are provided.

In support of the policy of the Department of Transportation on gender and ethnic diversity, we encourage qualified women and members of minority groups to apply.

We may not release a completed application or the information in it to the public, except under an order issued by a Federal court or as otherwise provided under the Privacy Act (5 U.S.C. 552a).

Authority: 49 U.S.C. 60102, 60115.

Issued in Washington, DC on August 21, 2003.

Stacey L. Gerard,

Associate Administrator for Pipeline Safety.

[FR Doc. 03–21964 Filed 8–26–03; 8:45 am]

BILLING CODE 4910–60–P

DEPARTMENT OF TRANSPORTATION

Surface Transportation Board

[STB Docket No. AB–853 (Sub–No. 1X)]

Kansas & Oklahoma Railroad, Inc.—Abandonment Exemption—in Hodgeman, Comanche, Kiowa, and Pratt Counties, KS

Kansas & Oklahoma Railroad, Inc. (K&O), has filed a notice of exemption under 49 CFR 1152 subpart F—*Exempt Abandonments* to abandon two rail line segments as follows: (1) A 10.7-mile rail line between milepost 36.3 at Hanston, and milepost 47.0 at Jetmore, in Hodgeman County, KS; and (2) a 46.8-mile rail line between milepost 589.2 at Coats, and milepost 636.0 at Protection, in Comanche, Kiowa, and Pratt Counties, KS. The lines traverse United States Postal Service Zip Codes 67849, 67854, 67028, 67155, 67029, and 67127.

K&O has certified that: (1) No local traffic has moved over the line for at least 2 years; (2) there is no overhead traffic on the line; (3) no formal complaint filed by a user of rail service on the line (or by a state or local government entity acting on behalf of such user) regarding cessation of service over the line either is pending with the Surface Transportation Board (Board) or with any U.S. District Court or has been decided in favor of complainant within the 2-year period; and (4) the requirements at 49 CFR 1105.7 (environmental reports), 49 CFR 1105.8 (historic reports), 49 CFR 1105.11 (transmittal letter), 49 CFR 1105.12 (newspaper publication), and 49 CFR 1152.50(d)(1) (notice to governmental agencies) have been met.

As a condition to this exemption, any employee adversely affected by the abandonment shall be protected under *Oregon Short Line R. Co.—Abandonment—Goshen,* 360 I.C.C. 91 (1979). To address whether this condition adequately protects affected employees, a petition for partial revocation under 49 U.S.C. 10502(d) must be filed. Provided no formal expression of intent to file an offer of financial assistance (OFA) has been received, this exemption will be effective on September 26, 2003, unless stayed pending reconsideration. Petitions to stay that do not involve environmental issues,[1] formal expressions of intent to file an OFA under 49 CFR 1152.27(c)(2),[2] and trail use/rail banking requests under 49 CFR 1152.29 must be filed by September 8, 2003. Petitions to reopen or requests for public use conditions under 49 CFR 1152.28 must be filed by September 16, 2003, with: Surface Transportation Board, 1925 K Street, NW., Washington, DC 20423–0001.

A copy of any petition filed with the Board should be sent to applicant's representative: Karl Morell, 1455 F St., NW., Suite 225, Washington, DC 20005.

If the verified notice contains false or misleading information, the exemption is void *ab initio.*

K&O has filed an environmental report which addresses the effects, if any, of the abandonment on the environment and historic resources. SEA will issue an environmental assessment (EA) by August 29, 2003. Interested persons may obtain a copy of the EA by writing to SEA (Room 500, Surface Transportation Board, Washington, DC 20423–0001) or by calling SEA, at (202) 565–1539. (Assistance for the hearing impaired is available through the Federal Information Relay Service (FIRS) at 1–800–877–8339.) Comments on environmental and historic preservation matters must be filed within 15 days after the EA becomes available to the public.

Environmental, historic preservation, public use, or trail use/rail banking conditions will be imposed, where appropriate, in a subsequent decision.

Pursuant to the provisions of 49 CFR 1152.29(e)(2), K&O shall file a notice of consummation with the Board to signify that it has exercised the authority granted and fully abandoned the line. If consummation has not been effected by K&O's filing of a notice of consummation by August 27, 2004, and there are no legal or regulatory barriers to consummation, the authority to abandon will automatically expire.

Board decisions and notices are available on our Web site at *http://www.stb.dot.gov.*

Decided: August 18, 2003.

By the Board, David M. Konschnik, Director, Office of Proceedings.

Vernon A. Williams,

Secretary.

[FR Doc. 03–21572 Filed 8–26–03; 8:45 am]

BILLING CODE 4915–00–P

[1] The Board will grant a stay if an informed decision on environmental issues (whether raised by a party or by the Board's Section of Environmental Analysis (SEA) in its independent investigation) cannot be made before the exemption's effective date. *See Exemption of Out-of-Service Rail Lines,* 5 I.C.C.2d 377 (1989). Any request for a stay should be filed as soon as possible so that the Board may take appropriate action before the exemption's effective date.

[2] Each OFA must be accompanied by the filing fee, which currently is set at $1,100. *See* 49 CFR 1002.2(f)(25).

DEPARTMENT OF VETERANS AFFAIRS

Privacy Act of 1974; Report of Matching Program

AGENCY: Department of Veterans Affairs.

ACTION: Notice.

Notice is hereby given that the Department of Veterans Affairs (VA) intends to conduct a recurring computer program matching Railroad Retirement Board (RRB) benefit recipient records with VA pension and parents' dependency and indemnity compensation (DIC) records. The goal of this match is to compare income status as reported to VA with benefit records maintained by the RRB.

VA plans to match records of veterans and surviving spouses and children who receive pension, and parents who receive DIC, with railroad retirement benefit records maintained by RRB. The match with RRB will provide VA with data from the RRB Research File of Retirement and Survivor Benefits.

VA will use this information to update the master records of VA beneficiaries receiving income dependent benefits and to adjust VA benefit payments as prescribed by law. Otherwise, information about a VA beneficiary's income is obtained only from reporting by the beneficiary. The proposed matching program will enable VA to ensure accurate reporting of income.

Records to be Matched: The VA records involved in the match are the VA system of records, Compensation, Pension and Education and Rehabilitation Records—VA (58 VA 21/22), first published at 41 FR 924 (March 3, 1976), and last amended at 63 FR 37941 (7/14/98), with other amendments as cited therein. The RRB records consist of information from the Research File of Retirement and Survivor Benefits, Systems of Records RRB 225 and RRB 26 contained in the Privacy Act Issuances, 1991 compilation, Volume V, pages 518–519. In accordance with Title 5 U.S.C., subsection 552a(o)(2) and (r), copies of the agreement are being sent to both Houses of Congress and to the Office of Management and Budget. This notice is provided in accordance with the provisions of the Privacy Act of 1974 as amended by Pub. L. 100–503.

The match will start no sooner than 30 days after publication of this Notice in the **Federal Register**, or 40 days after copies of this Notice and the agreement of the parties is submitted to Congress and the Office of Management and Budget, whichever is later, and end not

more than 18 months after the agreement is properly implemented by the parties. The involved agencies' Data Integrity Boards (DIB) may extend this match for 12 months provided the agencies certify to their DIBs, within three months of the ending date of the original match, that the matching program will be conducted without change and that the matching program has been conducted in compliance with the original matching program.

ADDRESSES: Interested individuals may submit written comments to the Director, Office of Regulations Management (02D), Department of Veterans Affairs, 810 Vermont Avenue, NW., Room 1154, Washington, DC 20420. Comments will be available for public inspection at the above address in the Office of Regulations Management, Room 1158, between 8 a.m. and 4:30 p.m.

FOR FURTHER INFORMATION CONTACT: Paul Trowbridge (212B), (202) 273–7218.

SUPPLEMENTARY INFORMATION: This information is required by Title 5 U.S.C. subsection 552a(e)(12), the Privacy Act of 1974. A copy of this notice has been provided to both Houses of Congress and the Office of Management and Budget.

Approved: August 11, 2003.

Anthony J. Principi,

Secretary of Veterans Affairs.

[FR Doc. 03–21838 Filed 8–26–03; 8:45 am]

BILLING CODE 8320–01–P

Federal Register

Wednesday,
August 27, 2003

Part II

Department of Agriculture

Agricultural Marketing Service

7 CFR Part 1032

Milk in the Central Marketing Area; Decision on Proposed Amendments to Marketing Agreement and to Order; Proposed Rule

DEPARTMENT OF AGRICULTURE

Agricultural Marketing Service

7 CFR Part 1032

[Docket No. AO–313–A44; DA–01–07]

Milk in the Central Marketing Area; Decision on Proposed Amendments to Marketing Agreement and to Order

AGENCY: Agricultural Marketing Service, USDA.

ACTION: Proposed rule.

SUMMARY: This document proposes to adopt as a final rule, order language contained in the interim final rule published in the **Federal Register** on February 12, 2003, concerning pooling provisions of the Central Federal milk order. It sets forth the decision of the Secretary and is subject to approval by producers. Specifically, this final decision would continue to amend the *Pool plant* provisions which: establish lower but year-round supply plant performance standards; would not consider the volume of milk shipments to distributing plants regulated by another Federal milk order as a qualifying shipment on the Central order; exclude from receipts diverted milk made by a pool plant to another pool plant in determining pool plant diversion limits; and establish a ''net shipments'' provision for milk deliveries to distributing plants. For *Producer milk,* this final decision would continue to adopt amendments which: establish higher year-round diversion limits; would base diversion limits for supply plants on deliveries to Central order distributing plants; and eliminate the ability to simultaneously pool milk on the Central order and a State-operated milk order that has marketwide pooling.

FOR FURTHER INFORMATION CONTACT: Jack Rower or Carol S. Warlick, Marketing Specialists, USDA/AMS/Dairy Programs, Order Formulation and Enforcement Branch, Stop—0231—Room 2971, 1400 Independence Avenue, SW., Washington, DC 20250–0231, (202) 720–2357, e-mail address: *jack.rower@usda.gov,* or (202) 720–9363, e-mail address: *carol.warlick@usda.gov.*

SUPPLEMENTARY INFORMATION: This administrative action is governed by the provisions of Sections 556 and 557 of Title 5 of the United States Code and, therefore, is excluded from the requirements of Executive Order 12866.

These proposed amendments have been reviewed under Executive Order 12988, Civil Justice Reform. This rule is not intended to have a retroactive effect. If adopted, this proposed rule will not preempt any state or local laws, regulations, or policies, unless they present an irreconcilable conflict with this rule.

The Agricultural Marketing Agreement Act of 1937, as amended (7 U.S.C. 601–674), provides that administrative proceedings must be exhausted before parties may file suit in court. Under Section 608c(15)(A) of the Act, any handler subject to an order may request modification or exemption from such order by filing with the Department of Agriculture (USDA) a petition stating that the order, any provision of the order, or any obligation imposed in connection with the order is not in accordance with the law. A handler is afforded the opportunity for a hearing on the petition. After a hearing, the Department would rule on the petition. The Act provides that the district court of the United States in any district in which the handler is an inhabitant, or has its principal place of business, has jurisdiction in equity to review the Department's ruling on the petition, provided a bill in equity is filed not later than 20 days after the date of the entry of the ruling.

Regulatory Flexibility Act and Paperwork Reduction Act

In accordance with the Regulatory Flexibility Act (5 U.S.C. 601 *et seq.*), the Agricultural Marketing Service has considered the economic impact of this action on small entities and has certified that this proposed rule will not have a significant economic impact on a substantial number of small entities. For the purpose of the Regulatory Flexibility Act, a dairy farm is considered a ''small business'' if it has an annual gross revenue of less than $750,000, and a dairy products manufacturer is a ''small business'' if it has fewer than 500 employees.

For the purposes of determining which dairy farms are ''small businesses,'' the $750,000 per year criterion was used to establish a production guideline of 500,000 pounds per month. Although this guideline does not factor in additional monies that may be received by dairy producers, it should be an inclusive standard for most ''small'' dairy farmers. For purposes of determining a handler's size, if the plant is part of a larger company operating multiple plants that collectively exceed the 500-employee limit, the plant will be considered a large business even if the local plant has fewer than 500 employees.

Approximately 9,695 of the 10,108 dairy producers (farmers), or 95.9 percent, whose milk was pooled under the Central order at the time of the hearing (November 2001) would meet the definition of small businesses. On the processing side, approximately 10 of the 56 milk plants associated with the Central order during November 2001 would qualify as ''small businesses,'' constituting about 17.9 percent of the total.

Based on these criteria, more than 95 percent of the producers would be considered as small businesses. The adoption of the proposed pooling standards serves to revise established criteria that determine those producers, producer milk, and plants that have a reasonable association with, and are consistently serving the fluid needs of, the Central milk marketing area and are not associated with other marketwide pools concerning the same milk. Criteria for pooling are established on the basis of performance levels that are considered adequate to meet the Class I fluid needs and, by doing so, determine those that are eligible to share in the revenue that arises from the classified pricing of milk. Criteria for pooling are established without regard to the size of any dairy industry organization or entity. The criteria established are applied in an identical fashion to both large and small businesses and do not have any different economic impact on small entities as opposed to large entities. Therefore, the proposed amendments will not have a significant economic impact on a substantial number of small entities.

A review of reporting requirements was completed under the Paperwork Reduction Act of 1995 (44 U.S.C. Chapter 35). It was determined that these amendments would have no impact on reporting, recordkeeping, or other compliance requirements because they would remain identical to the current requirements. No new forms are proposed and no additional reporting requirements would be necessary.

This action does not require additional information collection that requires clearance by the Office of Management and Budget beyond currently approved information collection. The primary sources of data used to complete the forms are routinely used in most business transactions. Forms require only a minimal amount of information which can be supplied without data processing equipment or a trained statistical staff. Thus, the information collection and reporting burden is relatively small. Requiring the same reports for all handlers does not significantly disadvantage any handler that is smaller than the industry average.

Prior Documents in This Proceeding

Notice of Hearing: Issued October 17, 2001; published October 23, 2001 (66 FR 53551).

Tentative Final Decision: Issued November 8, 2002; published November 19, 2002 (67 FR 69910).

Interim Final Rule: Issued February 6, 2003; published February 12, 2003 (68 FR 7070).

Preliminary Statement

A public hearing was held upon proposed amendments to the marketing agreement and the order regulating the handling of milk in the Central marketing area. The hearing was held, pursuant to the provisions of the Agricultural Marketing Agreement Act of 1937, as amended (7 U.S.C. 601–674), and the applicable rules of practice and procedure governing the formulation of marketing agreements and marketing orders (7 CFR part 900), at Kansas City, Missouri, on November 14–15, 2001, pursuant to a notice of hearing issued October 17, 2001, and published October 23, 2001 (66 FR 53551).

Upon the basis of the evidence introduced at the hearing and the record thereof, the Administrator, on November 8, 2002, issued a Tentative Final Decision containing notice of the opportunity to file written exceptions thereto.

The material issues, findings, and conclusions, rulings, and general findings of the tentative final decision are hereby approved and adopted and are set forth in full herein. The material issues on the record of the hearing relate to:

1. Pooling Standards

a. Supply plant pooling standards.

b. Cooperative supply plant performance standards.

c. Supply plant system standards.

d. Standards applicable for Producer milk.

e. Establishing pooling standards for ''State units.''

2. Simultaneous pooling of milk on the order and on a State-operated milk order providing for marketwide pooling.

3. Rate of partial payments to producers.

4. Determining whether emergency marketing conditions existed warranting the omission of a recommended decision and the opportunity to file written exceptions.

Findings and Conclusions

The following findings and conclusions on the material issues are based on evidence presented at the hearing and the record thereof:

1. Pooling Standards

a. Supply Plant Pooling Standards

Several amendments to the pooling provisions of the Central order, previously adopted on an interim basis, are proposed to be adopted on a permanent basis by this final decision. According to the tentative decision, certain inadequacies of the supply plant pooling provisions were resulting in disorderly marketing conditions and the unwarranted erosion of the blend price received by those producers who consistently provide milk to meet the fluid demands of the Central marketing area. Specifically, the following amendments to the Central order (Order 32) for pool supply plants, previously adopted on an interim basis, are proposed to be adopted on a permanent basis by this final decision: (1) Lower the performance standards to 20 percent in each of the months of August through February and 15 percent in each of the months of March through July. Accordingly, automatic pool plant status during the 3-month period of May through July is thereby eliminated from the order; (2) Eliminate the volume of milk shipments made by supply plants to distributing plants regulated by another Federal milk marketing order as qualifying shipments in meeting the Central order supply plant shipping standard; (3) Exclude from receipts the diversions made by a pool plant to a second pool plant from the calculation of the diversion limits established for pool plants; and (4) Provide a ''net shipments'' standard for supply plant deliveries to the order's distributing plants for the purpose of meeting the Central order's supply plant shipping standard. Expanding pool supply plant qualification to include milk shipments to any plant that is part of a distributing plant unit was not adopted in the interim rule and is not adopted in this final rule.

Prior to the adoption of the interim rule, the Central order provided a supply plant performance standard whereby 35 percent of the milk received directly from dairy farms and cooperative handlers had to be transferred or diverted to distributing plants, including milk diverted by the plant operator, during each of the months of September through November and January. For all other months a 25 percent standard applied.

In addition, the Central marketing order provided automatic pool plant status during the 3-month period of May through July for supply plants provided they were pool plants during each of the immediately preceding months of August through April. The order did not include a performance standard which considered shipments to any plant that was part of a distributing plant unit as a qualifying shipment. The order did not limit supply plant shipments to distributing plants on a ''net shipments'' basis.

Prior to adoption of the interim rule, handlers could qualify supply plants as pool plants located inside or outside the market area by diverting milk to a pool distributing plant regulated by the Central order. Supply plant transfers to distributing plants regulated by another Federal order were considered as qualifying shipments for the purpose of determining if the Central supply plant shipping standard had been met.

The following amendments to the supply plant pooling standards were presented in testimony related to a proposal published in the hearing notice as Proposal 1. This proposal was offered by Dairy Farmers of America (DFA), Prairie Farms Cooperative (Prairie Farms), and Swiss Valley Farms (Swiss Valley). These organizations are cooperative associations that historically have pooled milk on the Central milk order or one of the nine orders consolidated to form the Central milk order. Hereinafter, this decision will refer to these proponents as ''DFA, *et al.*'' All three cooperative associations have ownership interests in fluid milk processing plants. Prairie Farms and Swiss Valley operate fluid plants.

Amendments to the supply plant pooling standards were offered, the proponents assert, because the pooling provisions of the order are not appropriately linking the ability to pool milk on the order with demonstrating consistent service in supplying the fluid needs of the market. DFA, *et al.*, proposed changing the seasonally adjusted performance standard for supply plants to 25 percent during each of the months of August through November and to 20 percent for each of the months of December through July. Adopting these standards would also eliminate automatic pool plant status for the 3-month period of May through July provided by the order. DFA, *et al.*, expressed continued support for these performance levels during the same periods in their comments on the tentative final decision.

Proposal 1 as offered would no longer consider milk deliveries to distributing plants regulated by another Federal milk marketing order as qualifying shipments for determining if the supply plant performance standard for the Central Order had been met. Similarly, the proposal would not consider milk deliveries to distributing plants that are part of a distributing plant unit as

qualifying shipments for determining if the supply plant performance standard had been met.

Proposal 1 also would limit a handler's ability to qualify supply plants located outside the Central Order marketing area as pool plants through direct deliveries of milk to pool distributing plants. The proposal also calls for establishing a ''net shipments'' provision. A net shipments standard would exclude from a supply plant's qualifying shipments any transfer or diversion of bulk fluid milk products made by a distributing plant receiving a qualifying shipment.

In support for Proposal 1, the DFA, *et al.*, witness testified that the orderly marketing of milk requires appropriate performance standards for supply plants to ensure that distributing plants are adequately supplied with milk as a condition for receiving the Central order's blend price. The witness explained that performance standards should require a level of association to a market by demonstrating the ability to supply the Class I needs of that market. The witness testified that milk located far from the market also should have performance standards that are workable and consistent with Federal order policy. According to the witness, the current practice of using direct deliveries from farms to distributing plants located inside the marketing area as a method to qualify plants located outside of the Central order marketing area as pool supply plants is inappropriate because milk pooled in this manner does not provide any reasonable service to the Class I needs of the market.

According to the DFA, *et al.*, witness, the reform of Federal milk orders provided unique pooling standards that apply to each market on an individual basis. The witness testified that during the reform process, the more lenient performance standard was often selected for the new consolidated orders. According to the witness, such standards are proving to be inappropriate for the larger consolidated Central milk marketing order.

As evidence that milk is being inappropriately pooled on the order, the DFA, *et al.*, witness noted that at the time of implementing Federal milk order reform, the consolidated Central order was expected to have Class I use of nearly 50 percent. Instead, Class I use is averaging below 30 percent, the witness noted. The witness was of the opinion that this shortfall in projected Class I use was due to pooling much more milk from sources outside the marketing area than could be explained by consolidating the nine pre-reform orders into the current Central order. The DFA, *et al.*, witness asserted that milk order reform did not intend to provide for pooling milk supplies on the Central order that would not also provide a consistent and reliable service to the Class I needs of the market. Stressing that such milk does not provide a consistent and reliable service to the Class I needs of the market, the witness maintained that such milk should not be pooled on the Central order and receive the order's blend price.

The DFA, *et al.*, witness testified that the ability of handlers to pool large volumes of milk from distant sources without having to actually deliver the milk to the market has resulted in a significant reduction of the blend price received by producers who are serving the market's Class I needs. The witness also asserted that some Central order fluid handlers are having difficulties in obtaining sufficient milk supplies and find themselves competing for a supply of milk with other fluid handlers regulated under adjacent orders where blend prices are higher.

The DFA, *et al.*, witness also explained that a portion of the pre-reform Southwest Plains order area had contributed a significant share of the milk supply needed for fluid use in the southeastern portion of the current Central marketing area. Much of the milk produced in Arkansas and southern Missouri became part of the milk supply for the Southeast order area, added the DFA, *et al.*, witness. The witness was of the opinion that adoption of Proposal 1 would result in a higher blend price for the Central order dairy farmers and enhance the ability of local Class I handlers to procure local milk supplies.

A DFA, *et al.*, witness from Prairie Farms testified that the significantly higher blend prices paid to producers under the neighboring Southeast and Appalachian orders are attracting milk supplies located in the southern and southeastern areas of the Central marketing area. The witness observed that these producers receive a higher price for their milk without incurring a significant change in hauling costs. The witness indicated that this situation is resulting in distributing plants needing to pay substantial over-order premiums to obtain a supply of milk for distribution in the Central marketing area.

Witnesses representing several distributing plant operators confirmed that they are experiencing problems obtaining an adequate supply of milk for fluid use, especially during the fall months. These fluid handlers supported the adoption of Proposal 1 because the link between milk pooled on the Central order needs to be tied to actual deliveries of milk to the order's pool distributing plants.

A witness from Anderson-Erickson (A–E), a distributing plant operator regulated by the Central order, testified that the order's pooling provisions need to be revised to better condition the receiving of the order's blend price to actual performance in supplying the market's Class I needs. Similarly, a witness representing Suiza Foods (Suiza), a company which owns and operates distributing plants regulated by the Central order, testified that the pooling of milk on the Central order needs to be directly tied to actual performance in serving the fluid market. The Suiza witness stressed that actual performance in serving the fluid market should be necessary because it is the fluid market that generates the additional dollars to the marketwide pool.

The Suiza witness testified that their costs and ability to obtain raw milk for Class I use are tied directly to the pooling provisions of Federal milk orders, including the Central milk order. The witness stressed that blend prices, especially relative blend prices, provide the incentives for producers to move milk to where it is needed. However, explained the witness, Suiza faces new challenges in the Central marketing area since its formation under milk order reform. Specifically, the witness noted difficulty in procuring milk at one of their plants because local dairy farmers are delivering their milk to plants regulated on the Southeast and Appalachian orders. According to the witness, the blend prices in those orders are higher than in the Central milk order and therefore attract milk to those markets.

The Suiza witness was of the opinion that milk order reform placed other Central order distributing plants at a similar competitive disadvantage in competing for a supply of milk. While noting that the purpose of this proceeding is to address pooling problems resulting in lower blend prices to Central order dairy farmers, the witness stressed that in their opinion, the real issue that needs to be addressed is whether the Central order is too large. The witness cited the geographic diversity of the order and vastly differing marketing conditions within the marketing area's boundaries to question whether the Central order is truly a viable, single milk marketing area.

A witness from Mid States Dairy, an organization that operates a distributing

plant regulated by the Central order, testified that they were no longer able to source milk from their usual milksheds in southern Missouri and central Illinois. This witness stated that until recently, they had to rely on contracts with southern milk sources at premium prices to obtain a supply of milk because milk supplies were not available locally.

The DFA, *et al.*, witness testified that the order's supply plant performance standards should continue to be adjusted seasonally but at slightly different times. According to the witness, a higher standard of performance is needed for the months of August through November because increased customer demand occurs in those months. More importantly, the witness indicated that performance should be specified for every month of the year. In this regard, the witness from Prairie Farms added that specifying August through November for increased performance would help to ease their need to obtain additional milk supplies from other marketing areas.

Using milk located within the marketing area to qualify milk for pooling at plants located far from the marketing area was described by the DFA, *et al.*, witness as ''pyramiding.'' The witness also attributed pyramiding to inadequate performance standards. As an illustration, the witness provided evidence to show how pooling provisions permit the pooling of milk volumes that cannot reasonably demonstrate performance in serving the Class I needs of the Central marketing area. As an example, the witness explained how a single tanker load of milk delivered to a pool plant within the Central order marketing area can qualify as many as 15 additional tanker loads of milk for pooling on the order through diversions. The witness contended that the ability to pyramid milk for pooling in this way reveals the inadequacy of the current pooling standards. Eliminating the ability to pyramid milk for pooling, the witness stressed, provides a basis for lowering the order's supply plant performance standard.

The DFA, *et al.*, witness testified that supply plants delivering milk to distributing plants not regulated by the Central milk order should not be counted in determining if the Central order's performance standards have been met. The witness indicated that such milk does not serve the Class I needs of the Central order. The witness offered that standards allowing for pool qualification to be earned from shipments to another order's distributing plants stem from pre-reform pooling provisions that were generally associated with ''reserve supply'' orders where Class I use was relatively small. The witness contended that the consolidated Central order is not such an order. While deliveries of milk to another order could still occur, noted the witness, the deliveries should not count toward pool qualification.

The witness from DFA, *et al.*, also offered a modification to Proposal 1 for incorporating a ''net shipments'' feature for pool supply plants as a way to ensure that fluid milk was actually received and retained at a distributing plant for Class I use. According to the witness, this feature would prevent a supply plant from physically shipping milk into the facilities of a distributing plant only to have the milk reloaded and moved to another plant for uses other than Class I. The witness also noted that without a ''net shipments'' provision, suppliers could qualify milk for pooling on the Central order without that milk ever being available to service the Class I needs of the market.

The witnesses from A–E concurred with the need for a ''net shipments'' provision, as did a witness from Foremost Farms, USA, a cooperative whose plants were regulated under the Central and Upper Midwest milk marketing orders. A witness from Suiza, testified that while they did not oppose a ''net shipments'' provision, they were of the view that milk actually delivered to a distributing plant was performing a service to the Class I needs of the market. To the extent that the same milk is subsequently pumped back out of the plant, indicated the witness, that decision is made by the receiving handler. Therefore, concluded the Suiza witness, such milk should be counted in determining if the supply plant performance standard is being met.

Briefs from both A–E and Dean Foods [1] reaffirmed their opposition to the inclusion of supply plant shipments to distributing plant unit plants as counting towards meeting pool qualifying performance standards noting that a relatively large non-Class I volume of milk is often associated with distributing plant units. The briefs contended that pooling stand-alone Class II operations could result in placing pooling priority for milk used in Class II dairy products on a par with milk used for Class I. They viewed that adoption of expanding supply plant qualifying deliveries to distributing plant units would create inequities and perhaps even result in creating new disorderly marketing conditions.

Exceptions to the tentative final decision from A–E and Dean Foods agreed that the decision adequately and appropriately addressed the disorderly conditions raised by them and others in the record.

A group of cooperative associations with members located primarily in the Upper Midwest milk marketing area opposed amendments included in Proposal 1 because it was their view that the amendments would limit their ability to pool milk on the Central order. The cooperative associations included: Associated Milk Producers, Inc. (AMPI); Foremost Farms, USA (Foremost); Land O'Lakes (LOL); First District Association (FDA); Family Dairies USA (Family Dairies); and Lakeshore Federated Dairy Cooperative (Lakeshore), comprised of Midwest Dairymen's (Midwest Dairymen) Company, Manitowoc Milk Producers Cooperative, and Milwaukee Cooperative Milk Producers. Hereinafter this decision will collectively refer to this group of cooperative associations as the ''Upper Midwest Cooperatives.''

Testimony by the Upper Midwest Cooperatives'' witnesses argued that the adoption of more restrictive pooling standards would force milk that currently is pooled on the Central order to be pooled instead with the Upper Midwest pool. According to the witnesses, this would result in lower blend prices to Upper Midwest producers because of the lower Class I use in that area. The witnesses also argued that adopting the amendments contained in Proposal 1 would establish the more stringent pooling provisions that were in effect prior to milk order reform. According to the witnesses, this would establish a barrier to pooling the milk of producers who had long been associated with the markets merged to form the Central order.

To illustrate their point that the amendments of Proposal 1 would limit their ability to pool milk on the Central order, an Upper Midwest Cooperatives' witness testified that under current pooling provisions, every pound of milk delivered to Central order pool distributing plants provides the ability to pool 15 additional pounds of milk. If the pooling provisions proposed are adopted, the witnesses indicated that only 3 additional pounds of milk could be pooled for each pound of milk delivered on the Central order.

The Foremost witness, testifying on behalf of AMPI, LOL, Family Dairies, Midwest Dairymen, and FDA, testified that if Proposals 1 and 5 (Proposal 5 is discussed in more detail later in this decision) were adopted, and if they

[1] Suiza Foods Corporation merged with Dean Foods Company on December 21, 2001, at which time the name of the merged company became Dean Foods Company.

were pooling the maximum amount of milk allowed in the pre-reform orders, approximately 400 million pounds of milk per month would no longer be pooled on the Central order. Instead, the witness testified, this milk would be pooled on the Upper Midwest order. The witness maintained that this would increase the blend price differences between the two orders.

According to the Foremost witness, the blend price differences would have ranged between 32 cents per hundredweight (cwt) to as much as 91 cents per cwt for the one-year period of September 2000 through August 2001 if the pooling standards proposed had been in effect during that time. The witness emphasized this would have had an enormous adverse effect on the net income of Upper Midwest producers.

An Upper Midwest Cooperatives' witness from Family Dairies testified in opposition to pooling provision amendments that would limit the ability to pool milk on the Central Order and result in lower blend prices to producers located in the Upper Midwest. The witness stated that adoption of such proposals would result in creating more regional pricing problems and give selected handlers the ability to use the blend price as a procurement tool in areas outside the Central Order.

A witness for Lakeshore joined other Upper Midwest Cooperatives' witnesses by also stating their concern that the proposed pooling changes specifically in Proposals 1, 3, 5, and 7 (Proposals 3, 5, and 7 are discussed later in this decision) could force milk currently pooled on the Central order to instead be pooled on the Upper Midwest order. According to the witness, this would result in decreasing producer returns for those dairy farmers located in Northern Illinois and the surrounding area. Specifically, the Lakeshore witness explained that while a fluid milk plant at Rockford, Illinois, and a Dubuque, Iowa, distributing plant have the same federal order-dictated Class I price, the Rockford plant is disadvantaged because it has to pay a higher competitive value to attract Class I milk, adversely impacting their northern Illinois businesses.

A witness from LOL emphasized the necessity of basing pooling provisions on performance in serving the Class I needs of the market rather than the location of where milk originates. The witness was also of the opinion that the current order provisions provide adequate incentives to service Central order distributing plants. Stating that producers who share in the pool must be willing to serve the market, the LOL witness nevertheless stressed that the ability to pool milk on the Central order pool should not be restricted for the benefit of a select few. The LOL witness testified that milk no longer pooled on the Central order would instead be pooled on adjoining milk orders such as the Upper Midwest or Western marketing areas and characterized these areas as already carrying a disproportionate volume of reserve milk.

In response to concerns that Central order Class I handlers are having difficulty in obtaining a supply of milk, the LOL witness provided an analysis which suggested that tightening pooling provisions would not achieve what the proponents of Proposal 1 assert. The witness estimated that adopting the proposed pooling provisions would result in an increase of 35 cents per cwt in the Central Order blend price. According to the witness, such an increase would still leave the Central order blend price $1.48 per cwt below the blend price of the Southeast order thus weakening the argument that the higher blend price would mitigate the problem of Central order distributing plants securing a supply of milk.

The LOL witness asserted that the combination of Proposals 1, 3, 5, and 7 would place unreasonable restrictions on milk produced outside the marketing area relative to milk produced inside the marketing area. The witness indicated that supply plants located outside the marketing area would be required to receive milk and transfer it to distributing plants, thereby causing uneconomic movements of milk, adding costs and degrading milk quality due to additional handling. Furthermore, barriers to trade would be created by adopting these proposals, indicated the witness.

Two of the Upper Midwest Cooperatives' witnesses introduced cost-of-production studies conducted by universities indicating that dairy farmers in northern Illinois and Wisconsin enjoy little financial return from their dairy operations. The Foremost witness cited the Wisconsin study to indicate that in Wisconsin the marginal return of producing milk can be less than zero. According to the witnesses, the financial impact by limiting participation in the Central order pool through increased performance standards would be detrimental to Upper Midwest dairy farmers. In this regard, all of the Upper Midwest Cooperatives' witnesses stressed that their member producers are considered small businesses pursuant to the Regulatory Flexibility Act and that such status should be considered in determining appropriate performance standards for the Central order.

The witnesses for A–E and Suiza testified in opposition to considering supply plant shipments to distributing plant ''units'' as counted in determining pool-qualifying deliveries unless each plant of the ''unit'' could independently be a distributing plant under the terms of the order. The witness noted that relatively large non-Class I volumes of milk associated with a distributing plant unit could result in reducing the actual need for qualifying shipments made to distributing plants. In post-hearing briefs, Dean Foods indicated opposition to expanding qualifying shipments to any plant that is part of a distributing plant unit, noting that such performance standards would be inequitable and result in the creation of new disorderly marketing conditions.

The record of this proceeding strongly supports the conclusion in the tentative decision that the various features of the Central milk marketing order's supply plant pooling standards were either inadequate or unnecessary. These deficiencies contained in the pooling standards for supply plants were causing much more milk to be pooled on the Central milk order than could reasonably be considered as properly associated with the Central marketing area. Such milk does not demonstrate reasonable levels of performance necessary to conclude that it provides a regular and reliable service in satisfying the Class I milk demands of the Central marketing area.

The pooling standards of all milk marketing orders, including the Central order, are intended to ensure that an adequate supply of milk is supplied to meet the Class I needs of the market and to provide the criteria for identifying those who are reasonably associated with the market as a condition for receiving the order's blend price. The pooling standards of the Central order are represented in the *Pool Plant*, *Producer*, and *Producer milk* provisions of the order. Taken as a whole, these provisions are intended to ensure that an adequate supply of milk is supplied to meet the Class I needs of the market. In addition, it provides the criteria for identifying those whose milk is reasonably associated with the market by meeting the Class I needs and thereby sharing in the marketwide distribution of proceeds arising primarily from Class I sales. Pooling standards of the Central order are based on performance, specifying standards that, if met, qualify a producer, the milk of a producer, or a plant to share in the

benefits arising from the classified pricing of milk.

Pooling standards that are performance-based provide the only viable method for determining those eligible to share in the marketwide pool. This is because it is the additional revenue from the Class I use of milk that adds additional income, and it is reasonable to expect that only those producers who consistently bear the costs of supplying the market's fluid needs should be the ones to share in the distribution of pool proceeds. Pool plant standards—specifically standards that provide for the pooling of milk through supply plants—also need to reflect the supply and demand conditions of the marketing area. This is important because producers whose milk is pooled receive the market's blend price.

Similarly, supply plant pooling standards should provide for those features and accommodations that reflect the needs of proprietary handlers and cooperatives in providing the market with milk and dairy products. When a pooling feature's use deviates from its intended purpose, and its use results in pooling milk that cannot reasonably be determined as serving the fluid needs of the market, it is appropriate to re-examine the need for continuing to provide that feature as a necessary component of the pooling standards of the order. Because one of the objectives of pooling standards is ensuring an adequate supply of fluid milk for the market, a feature which results in pooling milk on the order that does not provide such service should be considered as unnecessary for that marketing area.

Pooling standards are needed to identify the milk of those producers who are providing service in meeting the Class I needs of the market. If a pooling provision does not reasonably accomplish this end, the proceeds that accrue to the marketwide pool from fluid milk sales are not properly shared with the appropriate producers. The result is the unwarranted lowering of returns of those producers who actually incur the costs of servicing and supplying the fluid needs of the market.

The post-hearing brief received from the Upper Midwest Cooperatives continued to stress opposition to the amendments offered by Proposals 1 (and Proposals) 3, 5, and 7. They view that such changes to the Central milk marketing order are discriminatory and that the proposed amendments would foster inefficiencies in milk marketing. The brief re-iterated their view that the Department's policy has been to design plant and producer pooling provisions that provide a regulatory balance between the fluid needs of the market and transportation efficiency to meet those needs. In this regard, the brief stressed the opinion that orderly marketing is promoted by not requiring shipments to distributing plants when such shipments are not needed for fluid uses. Additionally, the brief asserts that the Department has long recognized that excluding milk from the pool under rigid performance rules is a greater threat to orderly marketing in surplus marketing areas than is the pooling of surplus milk supplies.

The Upper Midwest Cooperatives' brief added that marketwide pooling has been determined as a constitutional means for surplus Grade A milk to share in the additional revenue resulting from fluid sales. Additionally, the brief noted that the 43-day national hearing review and reform proceeding of 1990—and the Second Amplified Decision of 1996 of that proceeding—articulate the policy of the Department to allow milk to shift to different markets in response to blend price changes. The brief also cited case law to maintain that the statutory scheme for promoting orderly marketing is the sharing of proceeds among producers in the form of uniform, or blend, prices. The opinion expressed in the Upper Midwest brief cites that case law has concluded that producer blend prices cannot be thwarted by a discriminatory transportation burden imposed on distant producers by government mandate.

The Upper Midwest Cooperatives objected to the tentative final decision, as restricting the amount of pooled milk on the Central Marketing order by mechanisms such as committed and controlled supplies from established producer organizations. The Upper Midwest Cooperatives continued by stating that the decision would eliminate much ''out-of-area'' milk from the pool and would also exclude Grade A milk produced inside the Central order.

The record of this proceeding clearly supports a finding that certain features of pooling standards of the Central Order established under the Federal order reform process, especially as they relate to supply plants, were either inadequate or unnecessary and that the Department was justified in adopting the interim rule. The Final Decision of milk order reform examined and discussed the various pooling standards and features of the pre-reform orders for their applicability in a new, larger consolidated milk order. The pooling standards and features adopted for the consolidated Central Order were designed to reflect and retain those standards and features of the pre-reform orders so as not to cause a significant change and indeed to provide for the continued pooling of milk that had been pooled by those market participants.

As noted in the tentative decision, the record provides strong evidence to conclude that several features of the *Pool plant* definition, specifically the provisions and features for supply plants, were not being used for the reasons they were intended. Other shortcomings of the Central order, specifically as they relate to producer milk (discussed later in this decision) also have contributed to the inappropriate pooling of the milk of producers who are not a legitimate part of the Central milk marketing area. Here too the impact has been an unwarranted pooling of milk classed at lower prices resulting in a lower blend price to those producers who actually and consistently supply the Class I needs of the market.

The tentative decision and this final decision find that the milk of some producers was benefitting from the blend price of the Central order while not demonstrating actual and consistent service in satisfying the Class I needs of the Central milk marketing area. This finding was attributed to improper and inadequate features of the pooling standards. The pooling provisions provided in the Final Decision of milk order reform established pooling standards and pooling features that envisioned the needs of the market participants resulting from the consolidation of nine pre-reform milk marketing areas consolidated to form the current Central milk marketing area. The reform Final Decision, as it related to the Central marketing area, did not intend or envision that the pooling standards and pooling features adopted would result in the sharing of Class I revenues with those persons, or the milk of those persons, who would not be demonstrating a measure of service in providing the Class I needs of the Central marketing area.

The reform Final Decision examined and discussed various pooling standards and features of the pre-reform orders for applicability in new, larger consolidated milk orders. The pooling standards and features adopted for the Central order were intended to reflect and retain those standards and features of the pre-reform orders so as to not cause a significant change, and indeed to provide for the continued pooling of milk that had been pooled by market participants. The pooling provisions of the Central order were based largely on the predecessor Iowa milk marketing order (then known as Order 79). The Iowa order contained the more liberal pooling provisions of the nine orders consolidated to form the

Central order. The record of this proceeding reveals that the combination and features adopted for pool plants, especially as they apply to pool supply plants, have not been reasonable or appropriate standards for the much larger consolidated Central order.

The record of this proceeding reveals that two-thirds of the Central marketing area population (and corresponding demand for fluid milk) is located in the southern and western portions of the marketing area. However, the adoption of the Central order pooling provisions did not anticipate that the adopted pooling standards would not adequately consider the impact on the northern Central marketing area resulting from the Arkansas and southern Missouri portions of the pre-reform Southwest Plains marketing area becoming part of the current Southeast marketing area. Milk produced in these regions had been regularly pooled on the Southeast milk order prior to the expansion of the Southeast order as part of milk order reform and is an integral part of the current Southeast marketing area milkshed. Changes in marketing conditions, as revealed in the record, have resulted from the pooling standards existing prior to the interim rule as an important factor in explaining why fluid handlers in the southern reaches of the Central order have had difficulties obtaining a supply of milk.

As previously indicated, pooling milk on the Central order without demonstrating actual performance in servicing the Class I needs of the market area is neither appropriate nor intended. The record indicates that the volume of milk pooled on the Central Order originating from sources far outside the marketing areas of the nine predecessor marketing areas increased by 186 percent when comparing, for example, the pre-reform month of December 1998 with the post-reform month of December 2000. Of the increase shown in this comparison, milk pooled on the order and originating within the marketing area increased by only 10 percent. Of the additional milk pooled on the Central order, the greatest increase is represented by milk priced at lower class prices. Additionally, testimony by Upper Midwest Cooperatives' witnesses clearly indicated that under the Central order's current pooling provisions, milk pooled on the Central order is not necessarily available to fill the Central market's fluid needs.

The tentative decision as well as this final decision agree with the proponents and those entities who expressed support for adopting Proposal 1 that the order's pooling standards warrant changes. Both the tentative decision and this final decision find, however, that the performance standards of Proposal 1 are unreasonably high when considering the complete context of the pooling provision modifications made in this decision. If adopted as proposed, together with the other amendments adopted in this decision, milk that has had a long-established association in supplying those pre-reform marketing order areas consolidated to form the Central order may no longer be pooled on the Central order. Most of this milk originates from areas in the Upper Midwest marketing area. The performance standards sought in Proposal 1 may unintentionally compound the difficulties of Central order distributing plants in securing needed milk supplies that could be made available if not for unreasonably high performance standards. Accordingly, this final decision proposes to adopt on a permanent basis the following amendments to the pooling standards and features of the order that were adopted in the interim final rule:

1. Performance standards for supply plants are reduced to (1) 20 percent in each of the months of August through February and (2) 15 percent in each of the months of March through July. Lower supply plant shipping performance standards are established because of accompanying adjustments to the order's other pooling provisions and features. Lowering supply plant performance standards also addresses the concern by Upper Midwest Cooperatives that a ''tightening'' of the order's performance standards would erect an unreasonable barrier in supplying to, and to pooling milk on, the Central order. As noted in the tentative decision, it should also be emphasized in this final decision that, to the extent that the supply plant performance standards may warrant further refinement, the order provides the means for initiating a change by providing authority for the Market Administrator to consider and make needed changes.

Given that performance standards are specified in every month, the need to continue with the automatic pool plant feature for supply plants during the 3-month period of May through July is rendered unnecessary and contrary to establishing such standards of performance in the first place. The adoption of year-round performance standards, adjusted seasonally, will better assure that a consistent and reliable supply of milk will be provided to the fluid market throughout the year.

August should be included for those months in which a higher performance standard is warranted. Including August in the higher performance months is supported by record evidence which reveals August as the beginning of seasonal increased demand due to the opening of schools occurring at the same time as a general overall decline in milk supplies.

2. As in the tentative decision, this final decision would eliminate a handler's ability to qualify plants located outside the marketing area by cooperative handlers (as defined in § 1000.9(c)) or diversions from a pool plant of the Central order to another pool plant of the Central order. The record supports a finding that milk pooled in this manner does not actually demonstrate real service in meeting the Class I needs of the Central marketing area. Milk pooled in this manner was often referred to in record testimony as ''pyramiding.'' No reasonable basis can be found in the record evidence to conclude that milk pooled in this manner warrants receiving the Central order blend price. The record can only support concluding that milk pooled in this manner serves to lower the blend price paid to producers who actually do supply the market's Class I needs.

3. The tentative decision and this final decision find that shipments of milk to distributing plants regulated by another Federal milk marketing order should not be considered in determining if a supply plant meets the specified performance standard of the Central order for pooling. The performance standards proposed to be adopted by this decision for the Central order are designed so that its distributing plants are adequately supplied with milk. Milk shipments to distributing plants regulated by another Federal order only serve the Class I needs of that other order. Pooling standards for the Central marketing area provide the criteria for determining the milk of those producers who are serving the Class I needs of the Central marketing area and who would thereby receive the Central order blend price. It is reasonable in light of this objective to conclude that serving the needs of another market is not providing a service to the Central marketing area. Accordingly, such milk should not be considered as a qualifying shipment for meeting the supply plant performance standards of the Central order.

4. The tentative decision and this final decision find that the modification of Proposal 1 offered by DFA to limit pool qualifying deliveries to distributing plants on a ''net shipments'' basis is warranted. Milk deliveries to

distributing plants will be limited to milk transferred or diverted and physically received by distributing pool plants, less any transfers or diversions of bulk fluid milk products from the distributing plant. Relying on net shipments for determining pool qualifying deliveries to distributing plants is applicable to both supply plant deliveries and milk moved to distributing plants directly from the farms of producers. Adoption of this feature will help ensure that milk not serving the market's Class I needs will not be counted towards meeting the specified performance standard.

Providing a net shipments feature for the Central order is reasonable and will likely not be burdensome despite opposition to its adoption. Even with the inappropriate pooling of milk on the order, lower supply plant performance standards adopted in the tentative decision and this final decision are at levels below the Central market's Class I use of milk. While distributing plants do have some transfers and diversions of milk resulting from variations in demand arising from changing fluid milk needs on weekend days and holidays, the tentative decision and this final decision find it is doubtful that the magnitude of these transfers and diversions would be such that a supply plant would risk loss of pool plant status. Additionally, other changes to the order's pooling standards continuing to be adopted in this decision (discussed below) would provide the necessary safeguards that would make it even more unlikely that a supply plant would lose its pool status. This final decision continues to find that adoption of a net shipments feature in the pooling standards of the Central order also would aid in properly identifying the milk of those producers who actually supply milk to meet the Central marketing area's fluid needs.

b. Cooperative Supply Plant Performance Standards

A cooperative supply plant pooling provision, together with the feature of authorizing the market administrator to adjust the performance standards for cooperative supply plants, should be retained as suggested in the tentative decision. It was unclear at the time the tentative decision was issued whether Proposals 2 and 4, seeking removal of the cooperative supply plant performance standard and the corresponding provision authorizing the market administrator to adjust those standards, should be adopted in the tentative decision. Because the evidence in the record did not support the removal of these provisions and because there were no additional persuasive comments on this subject in response to the tentative decision, the Department has not proposed adopting these proposals in this final decision.

The Central marketing order provides for a cooperative association plant as a type of supply plant on the order provided the cooperative association's plant is located within the marketing area and that at least 35 percent of the milk which the cooperative association handles is shipped to a Central order distributing plant during any current month or in the immediately preceding 12-month period. In addition, the provision requires that the cooperative association plant not qualify as a distributing or supply plant under the Central order or any other Federal milk marketing order.

The DFA, *et al.,* witness stated that adoption of some of the other proposals considered in this proceeding, such as modifying supply plant performance standards and providing for net shipments and a one-time ''touch base'' standard, makes retaining this provision unnecessary. The witness also testified that the provision has not been used since implementation of the consolidated Central order.

Elimination of the provision was supported in testimony by witnesses representing both A–E and Suiza Foods. Both witnesses stated that the provision is unnecessary and is not being used. In their post-hearing briefs, both A–E and Dean Foods reiterated that no plant is presently qualified under the cooperative supply plant definition.

Although there was no opposition testimony to the removal of the cooperative supply plant provision in the Central Order, both the tentative decision and this final decision find that this provision and the corresponding provision authorizing the market administrator to make needed adjustments should be retained. The testimony contained in the record does not contain sufficient reason for a finding to eliminate this standard other than it is a provision that is not used. The provision allows pool qualification for cooperative supply plants on either an average of the preceding 12-month's shipments or the current month's shipments and provides pooling flexibility for cooperatives. The cooperative supply plant definition contains features that are unique and intentional. While the proponents and supporters of Proposals 2 and 4 testified that the cooperative supply plant provision is not currently being used, testimony received did not address the apparently diminished importance of this pooling provision that was used in four of the nine pre-reform milk orders consolidated to form the Central order. The provision also is a pooling feature provided in most other Federal orders and, as with the Central order, is not currently being used in most of the other Federal orders containing this provision. Given the current record, removing this provision from the Central order may result in the unintended removal of a pooling provision intended for cooperative associations that may be needed at some future time. Accordingly, this final decision does not adopt Proposals 2 and 4.

c. Supply Plant System Standards

Proposal 3 of the hearing notice seeking to increase the performance standards for a system of supply plants—and modified at the hearing to limit supply plant system formation to single handler entities instead of currently allowing such systems to be formed by multiple handlers—was not adopted in the tentative decision and is not proposed to be adopted in this final decision. As previously discussed, the record contains evidence that distributing plants regulated by the Central milk order are having difficulty obtaining an adequate supply of milk for fluid use. While this proposal's aim is, in part, to address this problem, there nevertheless remains the potential for a supply plant system to pool milk supplies that may not demonstrate actual service to the fluid needs of the Central marketing area. The modification of the proposal seeking to limit supply plant system formation to a single handler entity has merit. However, taking into account the current record and the fact that there were no exceptions to the tentative decision on this issue, it is not adopted as a modification to the order's current system pooling provision in this final decision. It is noted that the hearing testimony often referred to supply plant systems as ''supply plant units.'' Nevertheless, it is clear that hearing participants intended to mean ''supply plant systems'' and, accordingly, this final decision continues to consider the testimony in the context intended.

The supply plant system provisions of the Central order currently provide that a system of supply plants may qualify for pooling if 2 or more plants operated by one or more handlers meet the applicable performance standards established for a supply plant. A supply plant system would qualify to pool all of its milk receipts, including diversions, by meeting a performance standard of 25 percent in each of the months of September through November

and January and 35 percent for all other months. The order currently limits the formation of a supply plant system to plants located within the marketing area.

Proposal No. 3, by DFA, *et al.*, would raise the performance standards for supply plant systems by 5 percentage points for each of the months of August through November and by 3 percentage points higher in all other months. The proponent witness (representing DFA, *et al.*) testified that providing for supply plant systems extends benefits and efficiencies not otherwise available for individual handlers to reduce transportation costs by delivering milk from a more advantageously located supply plant at a volume that would satisfy the performance standards as if all supply plants not as advantageously located had individually met the indicated performance standard. According to the witness this also would avail plant efficiencies in the manufacturing operation of all supply plants that are part of the system. The witness also envisioned that the proposal could ease otherwise disruptive shipping obligations to their manufacturing operations, potentially reduce paperwork, and provide the opportunity for producers to receive prices higher than regulated minimum prices. Because system pooling offers a rewarding degree of pooling flexibility, the witness was of the opinion that a supply plant system should meet slightly higher performance standards than those applicable for a single supply plant. This rationale is consistent, the witness indicated, with the pre-reform Chicago Regional order which specified a performance standard at twice the rate for supply plant systems than was applicable for individual supply plants.

According to the DFA, et. al., witness, a higher performance standard for supply plant systems would contribute to making it easier to obtain additional milk supplies in the most efficient manner. Additionally, the witness was of the opinion that this change, together with other changes proposed, would eliminate the ability to ''pyramid'' the pooling of milk on the order and renew interest in supply plant systems for the market.

A witness from AMPI, who also testified on behalf of the Upper Midwest Cooperatives, opposed adoption of Proposal 3. The witness explained that increased performance standards would simply cause a handler to discontinue pooling its plants as a system, thus forcing the handler to ship a lower percentage of milk receipts from each of the individual supply plants. The witness asserted that this alternative would increase transportation costs without providing additional milk to distributing plants.

The AMPI witness also testified that a supply plant system operated by multiple handlers has the potential for one handler with substantially more sales to distributing plants than needed to meet the supply plant performance standard to pool the milk receipts of other handlers. According to the witness, this could reduce the total volume of milk shipments to distributing plants while technically meeting the order's performance standards. According to the witness, such a provision allows some handlers to entirely escape responsibility for supplying the fluid market and encourages handlers to pay other handlers to qualify their milk supplies for pooling. In light of these concerns, the witness offered a modification to Proposal 3 that limits supply plant system formation to single handler entities.

A witness testifying on behalf of Foremost, AMPI, LOL, Family Dairies, Midwest Dairymen, and FDA supported the advantages supply plant systems offer as a means to promote more efficient movement of milk to distributing plants. However, given the higher performance standards called for by the proposal, the witness indicated opposition to Proposal 3. The witness was of the opinion that there is no justification for supply plant systems to be required to meet higher performance standards than individual supply plants. The witness did note that a higher performance standard for a supply plant system formed by multiple handlers may be appropriate.

Providing pooling flexibility by permitting more than a single supply plant to form into a single pooling system offers the potential to increase efficiencies by minimizing transportation costs that may not be obtainable when each supply plant of the handler would need to meet the performance standards separately for each plant. Additionally, providing for supply plant systems serves to accommodate the specialization of plant operations without otherwise encouraging such a plant to deliver milk to a distributing plant solely to retain pool status. Providing the opportunity to gain such efficiencies is intended by the supply plant system provision because it does not disrupt the flow of milk for Class I use from supply plants to distributing plants.

The record suggests that supply plant systems formed by multiple handler entities offer the potential to pool milk on the Central order without meeting intended performance standards. The modification to Proposal 3, which would limit the formation of a supply plant system to a single handler entity, may offer a warranted change in the current supply plant system provisions without changing the current performance standards. However, the tentative decision found that the record did not provide sufficient evidence to tentatively adopt a change in the performance standards for supply plant systems or to limit the formation of supply plant systems to a single handler entity. Because there were no comments to the tentative decision on the provisions which would limit the formation of supply plant systems to a single handler entity, such provisions are not adopted in this final decision.

d. Standards Applicable for Producer Milk

Several changes to the pooling standards contained in the *Producer milk* definition of the Central Order that were previously adopted on an interim basis are proposed to be adopted on a permanent basis by this final decision. The adopted amendments were largely contained in a proposal, published in the hearing notice as Proposal 5, which was modified at the hearing by its proponents. The changes in the producer milk pooling standard are necessary to more accurately identify the milk of those dairy farmers who actually serve the Class I needs of the market. The amendments include: (1) Continue to establish year-round diversion limits, adjusted seasonally, for the amount of milk that a pool plant may divert to nonpool plants at 80 percent for each of the months of August through February and at 85 percent for each of the months of March through July. Accordingly, the provision, adopted on an interim basis, corrected the lack of diversion limits for the months of May through August; (2) Diversion limits for supply plants will continue to be based on deliveries to Central order pool distributing plants and will not include deliveries to other pool supply plants of the Central order. This eliminates the ability of a pool plant to pool increased volumes of milk by diversion to nonpool plants by diverting milk to a second pool plant; and (3) Continue to establish a net shipments feature for producer milk. These amendments maintain the integrity of the performance standards for pool plants of the Central marketing area and more appropriately identify those producers whose milk actually supplies the Central marketing area's Class I milk needs.

Prior to the adoption of the interim final rule, the *Producer milk* provision of the Central order provided for diversion limits of 65 percent during the months of September through November and January and limits of 75 percent during the months of February through April and December. While the Central order limits the pooling eligibility of diverted milk to nonpool plants in specified months, the order placed no limits on milk diversions to other pool supply plants of the order. Milk diverted from one pool plant to another pool plant enabled the diverting pool plant to increase the amount of milk that could be pooled but diverted to nonpool plants. During the months of May through August, an unlimited amount of producer milk could be diverted by pool plants to nonpool plants. The milk of a producer was not eligible for diversion until at least one day's production of a dairy farmer was physically received at a pool plant and the producer continually retained producer status on the Central order both before and after adoption of the interim rule. Finally, the order did not determine producer milk on a net-shipments basis until adoption of the interim rule.

Proposal No. 5, offered by DFA, *et al.*, seeks to establish new year-round diversion limits for producer milk at 75 percent for each of the months of August through November and at 80 percent for each of the months of December through July. These limits are subject to satisfying certain performance measures and would specify that at least 20 percent of receipts in each of the months of August through February and 15 percent in each month of all other months are delivered to Central order distributing plants. Because year-round diversion limits would be established for all months, the proposal is intended to eliminate the ability to pool an unlimited amount of milk on the order during May through August by diversion. As noted in the discussion of supply plant performance requirements earlier, DFA, *et al.*, repeated their argument for these diversion limits in their exceptions to the tentative decision.

Proposal 5, offered by DFA, *et al.*, was modified in testimony by the DFA witness. The modification proposed sought also to incorporate a net-shipments feature for producer milk as they had proposed as a modification to Proposal 1. According to the witness, the net-shipments feature would be used to determine pool-qualifying diverted milk on the basis of milk receipts transferred or diverted to and physically received by Central order distributing plants less any transfers or diversions of milk from such distributing plants. In exceptions to the tentative decision, DFA, *et al.*, stated that the net shipment provision for producer milk is at least as important as it is for supply plant milk.

The DFA, *et al.*, witness testified that the core issues of the hearing are restoring orderly marketing conditions and economically justifying the appropriate performance standards that, if met, warrant receiving the Central Order blend price. The witness explained that orderly marketing embodies the principles of common terms and pricing that attracts milk to move to the highest-valued use when needed and for milk to clear the market when not needed in higher-valued uses. The DFA witness was of the opinion that the percentage of allowable diversions should be increased over those currently applicable in the Central order. The witness indicated that this becomes possible with the adoption of the other pooling provision amendments, including changing performance standards and considering milk deliveries to distributing plants on a net shipments basis.

The DFA, *et al.*, witness testified that the Central order should provide a limit on the amount of milk that can be diverted to nonpool plants each month by conditioning diversions on the basis of milk shipments to pool distributing plants or distributing plant units of the Central order. The witness stated that the aim of these features is to provide a better correlation between the order's pooling provision standards.

A witness representing several fluid milk processing plants joined in expressing their support for adopting year-round diversion limits. They were of the opinion that this would enhance pooling the milk of only those who provide an adequate supply of milk for fluid uses.

Witnesses representing the Upper Midwest cooperatives testified in opposition to the adoption of Proposal 5 and to the proposal's modification to incorporate a net-shipments feature. In their opinion, these changes would unnecessarily limit the amount of milk that could be pooled on the Central order. The witnesses indicated that this would force surplus milk supplies to be pooled instead on the Upper Midwest order. As a result, they testified, the Upper Midwest pool would be diluted and result in a lower blend price for their producers in the Upper Midwest.

A witness for the First District Association testified that diversion limits are not always needed for every month. The witness maintained that having year-round diversion limits would reduce competition and result in lower milk prices for producers of the Central marketing area. The witness argued that diversion limits should be provided only for ensuring the orderly marketing of fluid milk but should not be used so as to constitute a barrier to pooling milk.

In their exceptions to the tentative decision, the Upper Midwest Cooperatives reiterated their opposition to the addition of a net shipments provision and the limitation on diversions to only distributing plants, not milk received by any pool plant. They stated that this provision would eliminate a large amount of the milk that does not have a committed share of the Class I market. These cooperatives believe this unfairly allows nearby suppliers to accrue a higher blend.

The Central milk order, as all other Federal milk marketing orders, provides and accommodates for diverting milk because it facilitates the orderly and efficient disposition of the market's milk not needed for fluid use without the loss of the benefits that arise from being pooled on the order. When producer milk is not needed by the market for Class I use, its movement to nonpool plants for manufacturing should be provided for without loss of producer milk status. Preventing or minimizing the inefficient movement of milk solely for pooling purposes also needs to be reasonably accommodated. However, it is just as necessary to safeguard against excessive milk supplies becoming associated with the market through the diversion process.

A diversion limit establishes the amount of producer milk that may be an integral milk supply of a pool plant. With regard to the pooling issues of the Central order, the tentative decision as well as this final decision stress that it is the lack of diversion limits to nonpool plants, in part, that significantly contributes to the pooling of much more milk on the order that does not provide service to the Class I market yet receives the Central order blend price. Such milk is not a legitimate part of the reserve supply of the plant.

According to the tentative decision and this final decision, milk diverted to nonpool plants is milk not physically received at a pool plant. However, it is included as a part of the total producer milk receipts of the diverting plant. While diverted milk is not physically received at the diverting plant, it is nevertheless an integral part of the milk supply of that plant. If such milk is not part of the integral supply of the diverting plant, then that milk should not be associated with the diverting

plant. Therefore, such milk should not be pooled.

Both the tentative decision and this final decision state that the lack of diversion limits only provides a means for associating much more milk with the market without the burden of demonstrating actual service in meeting the Class I needs of the market. Associating more milk than is actually part of the legitimate reserve supply of the diverting plant unnecessarily reduces the potential blend price paid to dairy farmers. Without diversion limits, the order's ability to provide for effective performance standards and orderly marketing is weakened.

The lack of diversion limit standards applicable to pool plants opens the door for pooling much more milk on the market. While the potential size of the pool should be established by the order's pooling standards, the lack of diversion limits renders the potential size of the pool as undefined. With respect to the marketing conditions of the Central marketing area evidenced by the record, both the tentative decision as well as this final decision find that the lack of year-round diversion limits on producer milk has caused much more milk to be pooled on the order than can reasonably be considered part of the legitimate reserve supplies of the pool plants and does not provide any actual service in meeting the Central market's Class I needs.

The lack of standards applicable for diversions to nonpool plants for the months of May through August prior to the interim rule resulted in the pooling of much more milk than can demonstrate any actual service in meeting the Class I needs of the Central marketing area. The diversion limit standards of Proposal 5 address this concern. However, the diversion limits adopted in the tentative decision and proposed to be adopted on a permanent basis by this final decision are higher than those proposed. Increasing the diversion limit standard is made possible because of other changes adopted in the tentative decision that would also be adopted in this final decision. The changes to the diversion limits standards adopted in the tentative decision are also proposed to be adopted in this final decision at a level to appropriately complement the performance standards. Accordingly, this decision proposes to establish a diversion limit for producer milk of 80 percent for each of the months of August through February and 85 percent for each of the months of March through July. In addition, the diversion limits may be adjusted by the Market Administrator.

As previously discussed, both the tentative decision and this final decision have determined that only deliveries or diversions to pool distributing plants, and not deliveries to pool supply plants, should be allowed to qualify subsequent supply plant diversions for pooling on the order. Such conditions are carried into the producer milk definition as a condition for diversion eligibility. It is also consistent, in light of such linkage, that a net shipments feature should be provided as part of the producer milk provision. However, as discussed earlier in the section on pooling standards, the evidence contained in the record does not support the inclusion of deliveries to pool distributing plant units to qualify supply plant diversions for pooling. Accordingly, this feature of Proposal 5 is not adopted.

A proposal, published in the hearing notice as Proposal 9, seeking to allow milk to be eligible for diversion to nonpool plants and for such milk to retain its association with the market for any months during which a handler failed to pool a dairy farmer's milk under any milk marketing order is not adopted. The tentative decision as well as this final decision find that a dairy farmer's milk must be physically received at a pool plant of the Central order before it is eligible for diversion to nonpool plants. Additionally, this final decision continues to find that if milk is not continuously pooled, it again must be received at a pool plant before regaining pooling eligibility.

The Central order currently specifies that the milk of a new producer, or a producer who has broken association with the market, is not eligible for diversion until one day's production is physically received at a pool plant in the first month, and the dairy farmer continuously retained producer status in following months. The dairy farmer's milk is associated with the market if it is included in the pool each month, except as a result of a temporary loss of Grade A approval.

Proposal 9 would allow milk diverted to a nonpool plant before the producer's milk is actually delivered to a pool plant in the same month to be considered producer milk. Proposal 9 also included a provision to allow the milk of a dairy farmer to retain its association with the market for any months during which the handler failed to pool the producer's milk under any order.

Proposal 9 was offered by the Upper Midwest Cooperatives. A witness from AMPI, testifying on behalf of the Upper Midwest Cooperatives, explained that Proposal 9 is needed to assure that producers' milk can be pooled for the entire month as long as one day's production is physically received at a pool plant any day during the month. According to the witness, producers could miss several days of being able to pool milk on the Central order due to unexpected phenomena, such as weather, trucking problems, and scheduling conflicts.

According to the AMPI witness, Proposal 9 also would allow milk to return for pooling on the order in the month following the month in which it was not pooled because the blend price was less than the Class III or Class IV price. In this regard, the witness noted that the order currently provides for milk to be pooled at least one day each month before being eligible for diversion to nonpool plants regardless of whether it is economically sound to pool milk based on the blend price that would result for the month.

The touch base standard of an order establishes an initial association by the producer, and the milk of the producer, with the market. In this way, the touch base provision serves to maintain the integrity of the order's performance standards. The record does not contain sufficient evidence for setting conditions that negate the need to properly re-establish association with the market. Doing so is neither burdensome nor unreasonable considering that only one day's milk production of a dairy farmer needs to be delivered to a plant and pooled in order to maintain association with the market. Accordingly, Proposal 9 is not adopted.

e. Establishing Pooling Standards for ''State Units''

A proposal, published in the hearing notice as Proposal 7, seeks to establish pooling units organized and reported by State, specifying that in order to pool milk from those States located outside of the States and specified counties that comprise the Central marketing area, each State unit would need to meet the performance standards applicable for pool supply plants. This proposal was not adopted in the tentative decision and is not adopted in this final rule. The Central order does not currently provide for pooling milk located outside of the marketing area in this manner.

Proposal 7, offered by Dairy Farmers of America (DFA), would group and report milk in State units and specify performance standards for such State units as those applicable to pool supply plants. The milk that would be affected would be milk located outside the States of Colorado, Illinois, Iowa, Kansas, Missouri, Nebraska, Oklahoma, and South Dakota, the Minnesota counties of Fillmore, Houston, Lincoln, Mower,

Murray, Nobles, Olmstead, Pipestone, Rock, and Winona, and the Wisconsin counties of Crawford, Grant, Green, Iowa, Lafayette, Richland, and Vernon.

The DFA witness testified that milk is being pooled on the Central order that is located in areas so far from the marketing area that such milk cannot and does not service the Class I needs of the Central market. The witness argued that milk from such distant areas was never intended to be a source of milk or a part of the Central order milkshed. According to the witness, large portions of the States of Minnesota and Wisconsin, characterized as a ''distant'' source of milk, had not historically been part of the supply area for the pre-reform marketing areas consolidated to form the Central milk marketing area. DFA argued that milk from these areas should be subject to the same performance standards as milk from other distant areas such as California or New Mexico.

According to the DFA witness, distant milk currently pooled on the Central order likely would not seek to be pooled on the order because the benefits of receiving a higher blend price for milk actually delivered to Central order pool plants would not offset the costs that would be incurred in transporting milk. In attempting to clarify what would be determined as being not distant, the DFA witness offered a method to distinguish between historical and distant milk supplies. Milk from counties associated with the Central market's pre-reform orders, which in 1998 had a daily supply volume in excess of one 50,000 pound load, would be included with milk considered to be local or in-area and not distant milk.

The principal problem confronting the Central order, as identified by the DFA witness, is that the distant milk receives the order's blend price without the burden of providing any regular and consistent service to the market beyond meeting a one-day touch-base standard. The witness argued that their proposal would set standards for milk from distant areas identical to local milk as a condition for receiving the order's blend price. Providing for this would not, according to the witness, discriminate, penalize, or establish any barriers to the pooling of milk on the Central order because the standards for local milk supplies and distant milk supplies would be the same. Support was given in testimony for establishing State units by witnesses representing Prairie Farms and Suiza. In their exceptions to the tentative final decision, DFA, *et al.*, reiterated their support for requiring performance on a unit basis by out of area milk.

A number of hearing participants opposed the adoption of the State unit pooling proposal, specifically the witnesses representing Upper Midwest cooperative associations. The Foremost Farms witness argued that adoption of the proposal would discourage efficient movements of milk to distributing plants and that such a provision would be inconsistent with the Agricultural Marketing Agreement Act (AMAA). This witness questioned why an organization with milk in the Central marketing area should be required to transport milk from distant areas in Minnesota and Wisconsin when the same organizations already have enough milk in the marketing area to satisfy the order's pooling standards. The witness indicated that this could result in forcing milk located within the marketing area to be hauled long distances to make room for the receipt of milk from distant locations.

The AMPI witness agreed with the Foremost witness' testimony and the witness representing the First District Association, both of which asserted that adopting State unit pooling for distant milk would destroy the benefits of pooling milk on the Central order. They held this opinion because the differences between Class I use and blend prices between the Central and Upper Midwest orders would narrow.

In post-hearing briefs, the Upper Midwest Cooperatives continued to express opposition to DFA's Proposal 7 (and to Proposals 1, 3, and 5). They characterized their opposition as establishing barriers to pooling on the basis of where milk is located through government-mandated transportation costs. As indicated above on proposals affecting pool plants and producer milk, their brief cited case law to advance their contention that such amendments would not be legal.

The record does not support the adoption of performance standards for pooling milk on the order on the basis of its location or as the proponent and supporters of Proposal 7 describe as State units. The marketing conditions of the Central order do not exhibit the need to require additional performance standards for milk located outside of the marketing area beyond those adopted in the tentative decision and proposed to be adopted by this final decision. Accordingly, all plants, regardless of location, may become eligible to have the milk of producers pooled on the Central order by meeting the performance standards specified for the various types of pool plants.

It is not important who provides the milk for Class I use or from where this milk originates. The order boundaries of the Central order were not intended to limit or define which producers, which milk of those producers, or which handlers could enjoy the benefits of being pooled on the Central order. What is important and fundamental to all Federal orders, including the Central order, is assuring an adequate supply of milk to meet the market's fluid needs, the proper identification of those producers who supply the market, and an equitable means of compensating those producers from the market's pool proceeds.

As discussed earlier on pooling standards for pool supply plant qualification, the provisions of the consolidated Federal milk orders were not intended to exclude any milk from being pooled on any order, as long as the fluid needs of a marketing area are being served by the milk. At the same time, reform of Federal milk orders did not adopt open pooling, but attempted to provide that each market pool would include the milk that actually is available for serving the fluid needs of the market. The determination of the boundaries of the Central marketing area was guided by the identification of the common characteristics of the predecessor orders that could be consolidated to form the marketing area and to promulgate a marketing order to provide for orderly marketing conditions. The consolidation of the pre-reform orders into the current Central order was not intended to determine those areas from which milk should, or should not, be obtained to serve the market. The adoption of revised pooling standards proposed to be adopted by this final decision should assure milk will be available for the Central market's fluid needs and therefore renders the proposed State unit provision unnecessary. Proposal 7 is not adopted.

2. Simultaneous Pooling of Milk on the Order and on a State-Operated Milk Order Providing for Marketwide Pooling

A proposal, published in the hearing notice as Proposal 8, seeking to exclude the same milk from being simultaneously pooled on the Central order and any State-operated order which provides for marketwide pooling, previously adopted on an interim basis, is proposed to be adopted on a permanent basis by this final decision. The practice of pooling milk on a Federal order and simultaneously pooling the same milk on a State-operated order also has come to be referred to as ''double dipping.'' The Central order did not prohibit milk from being simultaneously pooled on the order and a State-operated order that

provides for marketwide pooling prior to adoption of the interim rule. Proposal 8 was offered by A-E, Swiss Valley Dairy, AMPI, Family Dairies USA, FDA, Foremost, Milwaukee Cooperative Milk Producers, Manitowoc Milk Producers Cooperative, and Mid-West Dairymen's Company.

The AMPI witness, testifying on behalf of all the proponents of Proposal 8, stressed that a producer is prohibited from pooling the same milk on more than one Federal order. The witness maintained that the same restriction should be applicable between the Central order and any other regulatory authority that provides for marketwide pooling and the marketwide distribution of pooling revenue. According to the witness, this has been occurring with milk pooled under the California State-operated milk order program since March 2001 and continues.

The AMPI witness explained that the Central order pooling provisions allow a one-time minimal delivery of a single day's milk production of California producers to a Central order pool plant to qualify all subsequent milk production of those California producers on the Central order by diversion. However, the witness stressed, all of the diverted California milk is pooled on the State's milk order program and receives the pricing benefits that the California State program offers its dairy farmers.

The AMPI witness testified that the volume of California milk pooled on the Central order has been increasing since March 2001 and is unnecessarily reducing milk prices paid to Central order producers. The witness presented calculations that indicated that the impact on the Central order blend price was an average reduction of about 2 cents per hundredweight, amounting to almost $2 million in the 7-month period of March through September 2001. The witness stated that due to the obvious injurious effect on Midwest dairy farmers, the Department should put an end to the practice of double dipping and to do so on an emergency basis.

A witness testifying on behalf of the proponents explained that the reason milk used in manufactured products is included in a marketwide pool is that such milk represents a reserve supply of milk that is available to serve fluid distributing plants when needed. Accordingly, the witness stressed that the same milk cannot be considered to be available as a supply for fluid distributing plants regulated under two different marketwide pools. The witness explained that Proposal 8 would not preclude the pooling of California milk or milk from any other jurisdiction that has marketwide pooling on the Central order. However, the proposal would preclude the pooling of the same milk on the Central order when also pooled under some other order, like the California State milk order that provides for marketwide pooling. In this regard, the witness stated that there is no doubt that California's milk order pooling plan provides for marketwide pooling, adding that those who say it does not probably are basing their conclusion on California's quota and overbase pricing for milk.

Several other proponent witnesses representing cooperative associations whose member milk is pooled under the Central order supported the adoption of the proposal to eliminate ''double dipping'' as did two distributing plant operators. Both of the fluid processor representatives argued that milk originating from outside of a 500-mile radius of any of the order's distributing plants is not realistically available to serve the Class I market on a regular basis.

The representative from Land O'Lakes was opposed to adopting Proposal 8. The witness asserted that, despite evidence to the contrary, California does not have a marketwide pool. The witness explained that producers are paid on the basis of a quota price for milk used in fluid and soft dairy product uses, while the basis for non-quota milk is manufacturing values. The returns to producers arising from quota uses of milk, stated the LOL witness, are not distributed marketwide.

The LOL witness proposed a modification to Proposal 8 that would eliminate ''double dipping'' only with respect to the ''quota'' portion of the milk associated with the Central order and allow simultaneous pooling of ''overbase'' California milk on both the California and Central orders. The witness expressed concern that elimination of the ability of the same milk to be pooled simultaneously under a Federal order and a State order with marketwide pooling would cause problems in dealing with milk supplies from other States—such as Pennsylvania and North Dakota—that are considering modifying provisions to include marketwide pooling.

For over 60 years, the Federal government has operated the milk marketing order program. The law authorizing the use of milk marketing orders, the Agricultural Marketing Agreement Act of 1937 (AMAA), as amended, provides authority for milk marketing orders as an instrument which dairy farmers may voluntarily opt to use to achieve objectives consistent with the AMAA and that are in the public interest. An objective of the AMAA, as it relates to milk, was the stabilization of market conditions in the dairy industry. The declaration of the AMAA is specific: ''the disruption of the orderly exchange of commodities in interstate commerce impairs the purchasing power of farmers and destroys the value of agricultural assets which support the national credit structure and that these conditions affect transactions in agricultural commodities with a national public interest, and burden and obstruct the normal channels of interstate commerce.''

The AMAA provides authority for employing several methods to achieve more stable marketing conditions. Among these is classified pricing, which entails pricing milk according to its use by charging processors differing milk prices on the basis of form and use. In addition, the AMAA provides for specifying when and how processors are to account for and make payments to dairy farmers. Plus, the AMAA requires that milk prices established by an order be uniform to all processors and that the price charged can be adjusted by, among other things, the location at which milk is delivered by producers (Section 608c(5)).

As these features and constraints provided for in the AMAA were employed in establishing prices under Federal milk orders, some important market stabilization goals were achieved. The most often recognized goal was the near elimination of ruinous pricing practices of handlers competing with each other on the basis of the price they paid dairy farmers for milk and in price concessions made by dairy farmers. The need for processors to compete with each other on the price they paid for milk was significantly reduced because all processors are charged the same minimum amount for milk, and processors had assurance that their competitors were paying the same value-adjusted minimum price.

The AMAA also authorizes the establishment of uniform prices to producers as a method to achieve stable marketing conditions. Marketwide pooling has been adopted in all Federal orders because of its superior features of providing equity to both processors and producers, thereby helping to prevent disorderly marketing conditions. A marketwide pool, using the mechanism of a producer settlement fund to equalize on the use-value of milk pooled on an order, meets that objective of the AMAA of ensuring uniform prices to producers supplying a market.

The California State milk order program clearly has objectives similar to

those of the AMAA. Exhibits presented at the hearing indicate that the California State order program has a long history in the development and evolution of a classified pricing plan and in providing equity in pricing to handlers and producers. Important as classified pricing has been in setting minimum prices, the issue of equitable returns to producers for milk could not be satisfied by only the use of a classified pricing plan. Some California plants had higher Class I fluid milk use than did others and some plants processed little or no fluid milk products. As with the Federal order system, producers who were fortunate enough to be located nearer Class I processors had been receiving a much larger return for their milk than producers shipping to plants with lower Class I use or to plants whose main business was the manufacturing of dairy products. Over time, disparate price differences grew between producers located in the same production area of the State which, in turn, led to disorderly marketing conditions and practices. These included producers who became increasingly willing to make price concessions with handlers by accepting lower prices and in paying higher charges for services such as hauling. Contracts between producers and handlers were the norm, but the contracts were not long-term (rarely more than a single month) and could not provide a stable marketing relationship from which the dairy farmers could plan their operations.

In 1967, the California State legislature passed and enacted the Gonsalves Milk Pooling Act. The law provided the authority for the California Agriculture Secretary to develop and implement a pooling plan, which was implemented in 1968. The California pooling plan provides for the operation of a State-wide pool for all milk that is produced in the State and delivered to California pool plants. It uses an equalization fund that equalizes prices among all handlers and sets minimum prices to be paid to all producers pooled on the State order. While the pooling plan details vary somewhat from pooling details under the Federal order program, the California pooling objectives are basically identical to those of the Federal program.

It is clear from this review of the Federal and the California State programs that the orderly marketing of milk is intended in both systems. Both plans provide a stable marketing relationship between handlers and dairy farmers and both serve the public interest. It would be incorrect to conclude that the Federal and California milk order programs have differing purposes when the means, mechanisms, and goals are so nearly identical. In fact, the Federal order program has precedent in recognizing that the California State milk order program has marketwide pooling. Under milk order provisions in effect prior to milk order reform, and under § 1000.76(c), a provision currently applicable to all Federal milk marketing orders, the Department has consistently recognized California as a State government with marketwide pooling.

Since the 1960's the Federal milk order program recognized the harm and disorder that resulted to both producers and handlers when the same milk of a producer was simultaneously pooled on more than one Federal order. When this occurs, producers do not receive uniform minimum prices, and handlers receive unfair competitive advantages. The need to prevent ''double pooling'' became critically important as distribution areas expanded and orders merged. The issue of California milk, already pooled under its State-operated program and able to simultaneously be pooled under a Federal order, has, essentially, the same undesirable outcomes that Federal orders once experienced and subsequently corrected. It is clear that the Central order should be amended to prevent the ability of milk to be pooled on more than one order when both orders employ marketwide pooling.

There are other State-operated milk order programs that provide for marketwide pooling. For example, New York operates a milk order program for the western region of that State. A key feature explaining why this State-operated program has operated for years alongside the Federal milk order program is the exclusion of milk from the State pool when the same milk is already pooled under a Federal order. Because of the impossibility of the same milk being pooled simultaneously, the Federal order program has had no reason to specifically address double dipping or double pooling issues, the disorderly marketing conditions that arise from such practice, or the primacy of one regulatory program over another. The other States with marketwide pooling similarly do not double-pool Federal order milk.

The record testimony and evidence show milk pooled on the Central order originating from places distant from the area. However, the tentative decision and this decision acknowledge that with the advent of the economic incentives for California milk to be pooled on the Central order and, at the same time, enjoy the benefits of being pooled under California's State-operated milk order program, more milk has come to be pooled on the order that has no legitimate association with the integral milk supplies of the Central order pool plants. The association was possible only through what some market participants describe as a regulatory loophole.

California milk should only be eligible for pooling on the Central order when it is not pooled on the California State order and when it meets the Central's pooling standards. It is the ability of milk from California to ''double dip'' that is a source of disorderly marketing conditions and for much more milk being pooled on the Central order.

Proposal 8 offers a reasonable solution for adding a prohibition on allowing the same milk to draw pool funds from Federal and State marketwide pools simultaneously. It is consistent with the current prohibition against allowing the same milk to participate in two Federal order pools simultaneously. Adoption of Proposal 8 in both the tentative and this final decision will not establish any barrier to the pooling of milk from any source that actually demonstrates performance in supplying the Central market's need for milk used in Class I.

3. Rate of Partial Payments to Producers

A proposal that would change the rate of the partial payment to producers and cooperatives for milk delivered during the first 15 days of the month to the lowest class price for the prior month times 110 percent, published in the hearing notice as Proposal 6, was not adopted in the tentative decision and is not proposed to be adopted in this final decision. Therefore, the partial payment rate will remain as currently provided for by the order—at the lowest class price for the prior month.

This proposal offered by DFA intends to improve producer cash flow by bringing the partial payment into a closer relationship to the final blend price and to have the partial payment more closely reflect the value of the milk delivered to handlers during the first 15 days of the month. According to the DFA *et al.*, witness, the partial payment rate has declined as a share of the final payment since the consolidation of the Central market under milk order reform.

The DFA, *et al.*, witness stressed that producers need a more consistent cash flow than they currently are experiencing. The witness acknowledged that overpayment in the partial payment could be a problem if the producer does not have enough funds coming in the month's final

payment to cover the producer's authorized deductions. The witness noted that the existing $1.00 per hundredweight premiums above minimum order prices enjoyed by Central order producers are probably adequate to cover any overpayments made to producers.

Data provided by the DFA, *et al.*, witness sought to indicate that since order reform on January 1, 2000, the amount of the partial payment received by producers relative to the total payment for milk each month has been reduced when compared to the pre-reform orders. The analysis consisted of approximating a weighted average blend price as a proxy for a comparable order from the pre-reform order's information. The analysis, explained the witness, is a comparison of the current month's blend price with the lowest of the two lower class prices of the prior month. For the entire 56-month period, the witness stated, the average of the blend price minus the lowest class price was $1.59; the first 36 months the average was $1.52; and the last 20 months the average was $1.75. The witness concluded that the main concern revealed by this data is that the spread is widening. After evaluating several differing partial payment rates, the witness concluded that a five percent inflation at the prior month's lowest class price was a reasonable adjustment to approximating the spread that existed over the first 36-month period.

The DFA, *et al.*, witness also testified that there are a wide variety of payment dates and payment levels among the 11 orders. There are currently, said the DFA witness, three groupings: the Southern orders' payments are a percentage of the prior month's blend price adjusted for location; the Northwest and Central orders set the advanced payment at the prior month's lowest class price; and the Western orders use an add-on percentage applied to the prior month's lowest class price. The witness also noted that while most orders have one partial payment, the Florida order has two partial payments before a final payment is due.

Several individual dairy farmers also testified that their cash flow situations have deteriorated since the current partial payment rate provisions became effective. In this regard, all dairy farmers testified in support of increasing the rate of partial payment.

A representative of Leprino Foods, a national cheese-processing firm, testified that USDA should reject Proposal 6 since it does not appropriately address the issue it purports to remedy and it violates the minimum pricing concepts for manufacturers, but not because there is lack of need for an amendment. The Leprino witness testified that the cause of the disparity between the partial and final payment rates is a combination of a failure to blend the pool's higher use values into the partial payment and the use of a price level from the previous month rather than the current month. This witness argued that rather than addressing these problems in the proposal, the proposed increase in the rate merely transfers the burden to processors. The witness stated that the proposal violates minimum pricing principles by setting the partial rate above the equivalent market value for Classes III and IV, with the resulting differences in partial payment rates between orders causing disparate economic positions for competing Class III and IV handlers in different orders.

The witness from Leprino concluded that the most appropriate approach to address the root cause of the disparity between the partial and final payment would be the implementation of a similar minimum payment in pooling structure for the partial payment that exists in the final payment. However, the witness did not propose its adoption because such a remedy would require significant administration in terms of plant reporting, report analysis, pool calculation, and movement of funds into and out of the pool than the current system of minimum payment at the lowest class price. This concept was not properly noticed, the witness argued, and a more comprehensive review of all provisions of the order that would be affected and the magnitude of the impact would be necessary.

The Department reconstructed noticed data that recreated the intended analysis presented by witnesses. The Department's reconstruction relied, in part, on the partial payment provisions of the pre-reform orders. The Department used the previous month's Class III price of the pre-reform orders as the lowest class price because the Class III price was used then to set the rate of partial payment. In this regard, comparing partial payment relationship outcomes using actual historical provisions provided for comparing pre- and post-reform partial payment relationships as to the total payment for milk in a month.

Even with the limited amount of data available since the implementation of order reform, the Department's comparison of pre- and post-reform partial payment relationships to total payments does appear to support the observations made by the DFA witness. However, this initial observation alone is not a sufficient basis for changing the rate of the partial payment. Some significant differences in certain key assumptions were made by the proponents of Proposal 6 from those assumptions used by the Department in comparing pre- and post-reform time periods.

Also of concern is the limitation inherent in comparing a 36-month period to one of only 21 months. The 36-month time period shows price trends rising and falling, while the 21-month time shows a period of generally an upward trend in prices. This may suggest that there has not yet been a sufficient period of elapsed time to infer the impact of downward trends in prices and the possible effect on the relationship between the partial and final payments to producers.

With regard to Leprino's concern about uniformity of partial payment rates between orders, the current milk orders have a variety of partial payment rates. Several orders use a partial payment rate based on a percentage of the previous month's blend price, and the Florida order, for example, provides for two partial payments. Additionally, the Western and Arizona-Las Vegas orders, both of which pool significant volumes of milk used in cheese, provide for partial payment rates of 120 and 130 percent, respectively, of the previous month's lowest class price.

There may be times when the partial payment rate exceeds the balance due for the month. In this regard, handler interests point to this outcome as requiring them to pay more for milk for part of the month than its actual total value for the month. It is appropriate to note that this exact outcome occurred several times during the pre-reform 36-month period used by DFA. This decision finds the concerns of handlers in this regard as unpersuasive.

Deductions authorized by producers are more often made in the final payments for milk. There could be times when the amount deducted from the final payment exceeds the amount of the final payment. If the deductions are high enough for this to happen, it would be reasonable to conclude that producers desiring to smooth their cash flow would opt to allow a larger portion of their deductions to be made with receipt of the partial payment, as the order allows.

The partial payment provision in Federal orders is a minimum requirement placed on handlers to pay producers for milk delivered. It is notable that cooperatives and handlers are not restricted to paying only one partial payment at the rate specified in the order; partial payments for milk can be made more often. Additionally,

cooperatives and handlers are also at liberty to negotiate agreements for more frequent billings for milk and payments for milk above the minimum established by the order. As made evident by the record, more flexible partial payment options are available to both producers and handlers than relying solely on changing the minimum payment provisions.

As the Leprino witness noted, DFA's proposal does not incorporate or blend the higher-valued uses of milk in their analysis. In response to this observation, the Department compared the relationships between the partial and total payment using various percentages of the Central orders's previous month's blend price. Interestingly, if the desired objective is to more closely approximate the partial payment rate using the 36-month period before order reform, the proponents' 105 percent rate of the previous month's lowest class price does seem to best accomplish this. Nevertheless, the same limitations and concerns mentioned above prevent a finding that the Central order's rate for partial payment should be increased.

The tentative decision and this final decision find that the cash flow concerns of producers may be better served by the adoption of other proposals considered in this proceeding. Other amendments adopted in this decision affecting the pooling of milk in the Central order will likely reduce the erosion in the blend price received by Central producers. It is expected that higher blend prices would result from more accurately identifying those producers and the milk of those producers who actually serve the Class I needs of the market. Similarly, the relationship between the partial payment and the total price received by producers may change by the adoption of these pooling standard amendments. Accordingly, a finding that the rate of partial payment to producers by handlers should be increased is not supported by the evidence contained in the record of this proceeding.

4. Determining Whether Emergency Marketing Conditions Existed Warranting the Omission of a Recommended Decision and the Opportunity To File Written Exceptions

Evidence presented at the hearing established that the pooling standards of the Central order were inadequate and were resulting in the erosion of the blend price received by producers serving the Class I needs of the market and should be changed on an emergency basis. The unwarranted erosion of such producers' blend prices stems from improper performance standards as they relate to pool supply plants and the lack of limits for pool plant diversions to pool and nonpool plants. These shortcomings of the pooling provisions have allowed milk that does not provide a reasonable or consistent service to meeting the needs of the Class I market to be pooled on the Central order. Consequently, it was determined that emergency marketing conditions existed, and the issuance of a recommended decision was therefore omitted. The record clearly established a basis, as noted above, for amending the order on an interim basis and provided an opportunity to file written exceptions to the proposed amended order.

Evidence presented at the hearing also established that California milk pooled simultaneously on the California State-operated order and the Central Federal order, a practice commonly referred to as double dipping, rendered the Central Federal milk order unable to establish prices uniform to producers and to handlers and also has contributed to the unwarranted erosion of milk prices to Central producers.

In view of this situation, an interim final rule amending the order was issued as soon as the procedures were completed to determine the approval of producers.

Rulings on Proposed Findings and Conclusions

Briefs and proposed findings and conclusions were filed on behalf of certain interested parties. These briefs, proposed findings and conclusions, and the evidence in the record were considered in making the findings and conclusions set forth above. To the extent that the suggested findings and conclusions filed by interested parties are inconsistent with the findings and conclusions set forth herein, the requests to make such findings or reach such conclusions are denied for the reasons previously stated in this decision.

General Findings

The findings and determinations hereinafter set forth supplement those that were made when the Central order was first issued and when it was amended. The previous findings and determinations are hereby ratified and confirmed, except where they may conflict with those set forth herein.

(a) The tentative marketing agreement and the order, as hereby proposed to be amended, and all of the terms and conditions thereof, will tend to effectuate the declared policy of the Act;

(b) The parity prices of milk as determined pursuant to section 2 of the Act are not reasonable in view of the price of feeds, available supplies of feeds, and other economic conditions which affect market supply and demand for milk in the marketing area, and the minimum prices specified in the tentative marketing agreement and the order, as hereby proposed to be amended, are such prices as will reflect the aforesaid factors, insure a sufficient quantity of pure and wholesome milk, and be in the public interest; and

(c) The tentative marketing agreement and the order, as hereby proposed to be amended, will regulate the handling of milk in the same manner as, and will be applicable only to persons in the respective classes of industrial and commercial activity specified in, a marketing agreement upon which a hearing has been held.

Rulings on Exceptions

In arriving at the findings and conclusions, and the regulatory provisions of this decision, each of the exceptions received was carefully and fully considered in conjunction with the record evidence. To the extent that the findings and conclusions and the regulatory provisions of this decision are at variance with any of the exceptions, such exceptions are hereby overruled for the reasons previously stated in this decision.

Marketing Agreement and Order

Annexed hereto and made a part hereof is one document: A Marketing Agreement regulating the handling of milk. The Order amending the order regulating the handling of milk in the Central marketing area was approved by producers and published in the **Federal Register** on February 12, 2003 (68 FR 7070) as an Interim Final Rule. Both of these documents have been decided upon as the detailed and appropriate means of effectuating the foregoing conclusions.

It is hereby ordered, that this entire final decision and the Marketing Agreement annexed hereto be published in the **Federal Register**.

Determination of Producer Approval and Representative Period

May 2003 is hereby determined to be the representative period for the purpose of ascertaining whether the issuance of the order, as amended in the Interim Final Rule published in the **Federal Register** on February 12, 2003 (68 FR 7070), regulating the handling of milk in the Central marketing area is approved or favored by producers, as defined under the terms of the order (as amended and as hereby proposed to be amended) who during such

representative period were engaged in the production of milk for sale within the aforesaid marketing area.

List of Subjects in 7 CFR Part 1032

Milk marketing orders.

Dated: August 18, 2003.

A.J. Yates,

Administrator, Agricultural Marketing Service.

Order Amending the Order Regulating the Handling of Milk in the Central Marketing Area

This order shall not become effective unless and until the requirements of § 900.14 of the rules of practice and procedure governing proceedings to formulate marketing agreements and marketing orders have been met.

Findings and Determinations

The findings and determinations hereinafter set forth supplement those that were made when the order was first issued and when it was amended. The previous findings and determinations are hereby ratified and confirmed, except where they may conflict with those set forth herein.

(a) *Findings.* A public hearing was held upon certain proposed amendments to the tentative marketing agreement and to the order regulating the handling of milk in the Central marketing area. The hearing was held pursuant to the provisions of the Agricultural Marketing Agreement Act of 1937, as amended (7 U.S.C. 601–674), and the applicable rules of practice and procedure (7 CFR Part 900).

Upon the basis of the evidence introduced at such hearing and the record thereof, it is found that:

(1) The said order as hereby amended, and all of the terms and conditions thereof, will tend to effectuate the declared policy of the Act;

(2) The parity prices of milk, as determined pursuant to section 2 of the Act, are not reasonable in view of the price of feeds, available supplies of feeds, and other economic conditions which affect market supply and demand for milk in the aforesaid marketing area. The minimum prices specified in the order as hereby amended are such prices as will reflect the aforesaid factors, insure a sufficient quantity of pure and wholesome milk, and be in the public interest; and

(3) The said order as hereby amended regulates the handling of milk in the same manner as, and is applicable only to persons in the respective classes of industrial or commercial activity specified in, a marketing agreement upon which a hearing has been held.

Order Relative to Handling

It is therefore ordered, that on and after the effective date hereof, the handling of milk in the Central marketing area shall be in conformity to and in compliance with the terms and conditions of the order, as amended, and as hereby amended, as follows:

The provisions of the order amending the order contained in the interim amendment of the order issued by the Administrator, Agricultural Marketing Service, on February 6, 2003, and published in the **Federal Register** on February 12, 2003 (68 FR 7070), are adopted without change and shall be and are the terms and provisions of this order.

[This marketing agreement will not appear in the Code of Federal Regulations]

Marketing Agreement Regulating the Handling of Milk in Certain Marketing Areas

The parties hereto, in order to effectuate the declared policy of the Act, and in accordance with the rules of practice and procedure effective thereunder (7 CFR part 900), desire to enter into this marketing agreement and do hereby agree that the provisions referred to in paragraph I hereof as augmented by the provisions specified in paragraph II hereof, shall be and are the provisions of this marketing agreement as if set out in full herein.

I. The findings and determinations, order relative to handling, and the provisions of §§ 1032.1 to 1032.86, all inclusive, of the order regulating the handling of milk in the Central marketing area (7 CFR PART 1032) which is annexed hereto; and

II. The following provisions: Record of milk handled and authorization to correct typographical errors.

(a) Record of milk handled. The undersigned certifies that he/she handled during the month of _____ 2001, _____ hundredweight of milk covered by this marketing agreement.

(b) Authorization to correct typographical errors. The undersigned hereby authorizes the Deputy Administrator, or Acting Deputy Administrator, Dairy Programs, Agricultural Marketing Service, to correct any typographical errors which may have been made in this marketing agreement.

Effective date. This marketing agreement shall become effective upon the execution of a counterpart hereof by the Secretary in accordance with Section 900.14(a) of the aforesaid rules of practice and procedure.

In Witness Whereof, The contracting handlers, acting under the provisions of the Act, for the purposes and subject to the limitations herein contained and not otherwise, have hereunto set their respective hands and seals.

Signature

By (Name) _____

(Title) _____

(Address) _____

(Seal)

Attest

[FR Doc. 03–21527 Filed 8–26–03; 8:45 am]

BILLING CODE 3410–02–P

Federal Register

Wednesday,
August 27, 2003

Part III

Department of the Interior

Fish and Wildlife Service

50 CFR Part 20

Migratory Bird Hunting; Final Frameworks for Early-Season Migratory Bird Hunting Regulations; Final Rule

DEPARTMENT OF THE INTERIOR

Fish and Wildlife Service

50 CFR Part 20

RIN 1018–AI93

Migratory Bird Hunting; Final Frameworks for Early-Season Migratory Bird Hunting Regulations

AGENCY: Fish and Wildlife Service, Interior.

ACTION: Final rule.

SUMMARY: This rule prescribes final early-season frameworks from which the States, Puerto Rico, and the Virgin Islands may select season dates, limits, and other options for the 2003–04 migratory bird hunting seasons. Early seasons are those that generally open prior to October 1, and include seasons in Alaska, Hawaii, Puerto Rico, and the Virgin Islands. The effect of this final rule is to facilitate the selection of hunting seasons by the States and Territories to further the annual establishment of the early-season migratory bird hunting regulations.

DATES: This rule takes effect on August 27, 2003.

ADDRESSES: States and Territories should send their season selections to: Chief, Division of Migratory Bird Management, U.S. Fish and Wildlife Service, Department of the Interior, ms MBSP–4107–ARLSQ, 1849 C Street, NW., Washington, DC 20240. You may inspect comments during normal business hours at the Service's office in room 4107, 4501 N. Fairfax Drive, Arlington, Virginia.

FOR FURTHER INFORMATION CONTACT: Brian Millsap, Chief, or Ron W. Kokel, Division of Migratory Bird Management, U.S. Fish and Wildlife Service, (703) 358–1714.

SUPPLEMENTARY INFORMATION:

Regulations Schedule for 2003

On May 6, 2003, we published in the **Federal Register** (68 FR 24324) a proposal to amend 50 CFR part 20. The proposal provided a background and overview of the migratory bird hunting regulations process, and dealt with the establishment of seasons, limits, the proposed regulatory alternatives for the 2002–03 duck hunting season, and other regulations for migratory game birds under §§ 20.101 through 20.107, 20.109, and 20.110 of subpart K. On June 23, 2003, we published in the **Federal Register** (68 FR 37362) a second document providing supplemental proposals for early- and late-season migratory bird hunting regulations frameworks and the regulatory alternatives for the 2003–04 duck hunting season. The June 23 supplement also provided detailed information on the 2003–04 regulatory schedule and announced the Service Migratory Bird Regulations Committee (SRC) meetings. On June 18 and 19, we held open meetings with the Flyway Council Consultants at which the participants reviewed information on the current status of migratory shore and upland game birds and developed recommendations for the 2003–04 regulations for these species plus regulations for migratory game birds in Alaska, Puerto Rico, and the Virgin Islands, special September waterfowl seasons in designated States, special sea duck seasons in the Atlantic Flyway, and extended falconry seasons. In addition, we reviewed and discussed preliminary information on the status of waterfowl as it relates to the development and selection of the regulatory packages for the 2003–04 regular waterfowl seasons. On July 17, we published in the **Federal Register** (68 FR 42546) a third document specifically dealing with the proposed frameworks for early-season regulations. This document is the fourth in a series of proposed, supplemental, and final rulemaking documents. It establishes final frameworks from which States may select season dates, shooting hours, and daily bag and possession limits for the 2003–04 season. These selections will be published in the **Federal Register** as amendments to §§ 20.101 through 20.107, and § 20.109 of title 50 CFR part 20.

Review of Public Comments

The preliminary proposed rulemaking, which appeared in the May 6 **Federal Register,** opened the public comment period for migratory game bird hunting regulations. The public comment period for early-season issues ended on July 30, 2003. We have considered all pertinent comments received. Comments are summarized below and numbered in the order used in the May 6 **Federal Register.** We have included only the numbered items pertaining to early-seasons issues for which we received comments. Consequently, the issues do not follow in direct numerical or alphabetical order. We received recommendations from all Flyway Councils. Some recommendations supported continuation of last year's frameworks. Due to the comprehensive nature of the Councils' annual review of the frameworks, we assume support for continuation of last year's frameworks for items for which we received no recommendation. Council recommendations for changes are summarized below.

1. Ducks

Categories used to discuss issues related to duck harvest management are: (A) General Harvest Strategy, (B) Regulatory Alternatives, (C) Zones and Split Seasons, and (D) Special Seasons/Species Management. The categories correspond to previously published issues/discussion, and only those containing substantial recommendations are discussed below.

D. Special Seasons/Species Management

i. September Teal Seasons

Council Recommendations: The Atlantic Flyway Council recommended that States that have participated in the recent experimental teal season (Delaware, Maryland, Virginia, North Carolina, South Carolina, and Georgia) be offered an operational September teal season beginning in 2003. They recommend that the season run for nine consecutive days during September 1–30, 2003, with a bag limit not to exceed four teal, whenever the breeding population estimate for blue-winged teal exceeds 3.3 million in the traditional survey area. Delaware, Georgia, North Carolina, and Virginia may have shooting hours between one-half hour before sunrise and sunset, while shooting hours for Maryland and South Carolina may be between sunrise and sunset. In a subsequent recommendation in response to the July 17 proposed rule, the Council recommended the Service reverse its proposal to discontinue September teal seasons in North Carolina and South Carolina.

The Upper- and Lower-Region Regulations Committees of the Mississippi Flyway Council recommended that the 16-day September teal seasons continue to be used when the blue-winged teal breeding population is at or above 4.7 million, based on the recently completed report, ''Assessment of 16-Day September Teal Seasons 1998–2000 in the Central and Mississippi Flyways.''

The Central Flyway Council recommended that Nebraska's experimental September teal season become operational.

Written Comments: The North Carolina Wildlife Resources Commission and the South Carolina Department of Natural Resources requested we reverse our proposal to discontinue September teal seasons in North Carolina and South Carolina.

Both agencies cited inconsistencies in the application of criteria for these seasons, the lack of a detrimental impact upon nontarget species from these seasons, the performance of hunters in both States (as measured by the surveys) may not have exceeded the 0.25 attempt rate at nontargets, and the relatively low incidence of available nontarget species. In addition, six individuals from South Carolina requested a reconsideration of the Service's proposal to discontinue September teal seasons in North Carolina and South Carolina.

Service Response: In 1998, we approved the establishment of an experimental 9-day special September teal season in the Atlantic Flyway (63 FR 46124). Memorandums of Understanding (MOUs) were developed and implemented between the Service and all six participating States to stipulate the guidelines and implementation of these seasons. Because of the desire to assess these seasons on a Flyway-wide basis, we strongly encouraged as many of the States as possible to participate in the experimental evaluation since sampling requirements were based on the number of States involved. In 1999, the MOUs were revised to also include individual State-evaluation criteria.

In 2001, the Atlantic Flyway Council requested operational season status for the four States (Delaware, Georgia, Maryland, and Virginia) that met the individual State criteria. During the comment period, North Carolina and South Carolina requested that we reconsider our proposed decision to discontinue their September season, based upon data-analysis inconsistencies, and requested further analysis. We decided to continue the 9-day special season experimentally in all six States until a final report was submitted (66 FR 44010). The seasons were continued again on the same basis in 2002.

In March 2003, the Atlantic Flyway Council submitted its final report and requested approval of these seasons as operational for all six States in the experiment. Based on State-specific criteria that were established and approved in the MOUs by the individual participating States and the Service, we proposed in the July 17 **Federal Register** operational September teal seasons in Delaware, Virginia, Maryland, and Georgia. We further proposed to discontinue seasons in North Carolina and South Carolina, based on criteria that were not fully addressed in the MOU, particularly that State-specific nontarget attempt rates by hunters exceeded the 25 percent criterion over the 3-year experimental period. During the comment period, North Carolina and South Carolina submitted supplementary information related to hunter performance and the availability of nontarget species. Upon further review of the MOUs, we recognized that criteria governing the evaluation of these seasons were presented at both the State and Flyway level, while the original design for their evaluation was based only on a Flyway-wide approach. Given the origin of these criteria and subsequent ambiguity in the MOUs, we believe it is appropriate to apply the hunter-performance criteria at the Flyway level. Consequently, in view of the additional information submitted by the States, and the application of these data at the Flyway level, we are granting operational status to these seasons. Finally, with regard to other ongoing or future MOUs involving similar cooperative activities, we will invite additional participation and review by both Flyway Council and State personnel to ensure that all criteria used to evaluate program success are unambiguous and clearly understood by all parties. Further, any changes to MOU criteria will be affected only through complete replacement of the MOU, rather than amendment.

Regarding Nebraska's special teal season, we do not concur with the Central Flyway Council's recommendation for operational status of this season at this time. We believe that the season should remain experimental until a final report on the experiment is completed.

ii. September Teal/Wood Duck Seasons

Council Recommendations: The Atlantic Flyway Council recommended that the bag limit for Florida's special September wood duck and teal season remain at 4 wood ducks and teal in the aggregate.

Service Response: In 2001, we granted operational status to September teal/wood duck seasons in the States of Florida, Kentucky, and Tennessee. The September teal/wood duck season in all three States is a 5-day season, with a daily bag limit of four birds, no more than two of which can be wood ducks. We do not support the Council's request for a 4-wood duck daily bag limit in Florida, as previously existed. This change was a condition of grandfathering these special seasons. Additionally, we have concerns about our ability to track the status of Florida's wood duck population and the low hen wood duck survival rates noted during the recently completed Monitoring Initiative.

vii. Youth Hunt

Council Recommendations: The Atlantic Flyway Council recommended that the Service allow all States the option of holding ''youth waterfowl hunt days'' on nonconsecutive hunting days, while maintaining the requirement that they must be held on non-school days.

Service Response: In 2000, in light of continuing interest from the Flyway Councils, we decided to expand the special youth waterfowl hunt from 1 day to 2 consecutive days. Anecdotal data suggested that the hunt is very popular and has provided an excellent opportunity to introduce youth hunters to the sport of waterfowling and waterfowl and wetland conservation. Expansion of the special hunt to 2 consecutive days was implemented to help reduce travel difficulties and scheduling conflicts inherent with the 1-day hunt previously implemented. In 2001, the Service concurred with the Atlantic Flyway Council's recommendation to expand the youth hunt to 2 consecutive hunting days because Sunday hunting is prohibited in some States in the Flyway. We do not support further expansion of the special youth hunt to 2 nonconsecutive hunting days. Further separation of hunting days would be inconsistent with the purpose identified earlier by the Flyway Councils for expanding the special hunt to 2 days, which was to reduce travel difficulties and scheduling conflicts inherent with the former 1-day hunt.

2. Sea Ducks

During last year's season, we were made aware of a conflict between the framework closing date for ducks and that for sea ducks. The latest closing dates for ducks was extended to the last Sunday in January, while the closing date for sea ducks remained at January 20. To avoid the complications of sea ducks in the regular-duck-season bag, we have changed the sea duck closing date to January 31.

4. Canada Geese

A. Special Seasons

Council Recommendations: The Atlantic Flyway Council recommended that the Service increase the special September Canada goose hunting season bag limit to 8, with no possession limit, beginning with the 2003–04 hunting season. They further recommended that the framework closing date for the special September Canada goose season in North Carolina's Northeast Hunt Zone be extended from September 20 to September 30. They also recommended that the September 1–30 framework

dates for Rhode Island's September resident Canada goose season be made operational.

The Upper- and Lower-Region Regulations Committees of the Mississippi Flyway Council recommended a 1-year extension to the experimental early Canada goose season in Huron, Tuscola, and Saginaw counties in Michigan. Further, the Committees recommended that we grant operational status to Minnesota's Special September Canada Goose Season extension (16–22 September).

The Central Flyway Council recommended that South Dakota's 3-year experimental September Canada goose season (September 16–30) become operational for all of eastern South Dakota (east of the Missouri River), beginning in 2003.

The Pacific Flyway Council recommended that Wyoming's special-season framework for the Rocky Mountain population of western Canada geese consist of an 8-day season during September 1–15 in Bear River, Salt River, Farson-Eden Area, Bridger Valley, and Teton Counties, and the Little Snake River drainage portion of Carbon County. All participants must have a valid State permit for the special season. The number of permits may not exceed 240 in the Bear River, Salt River, Farson-Eden Area, and Bridger Valley area, and 20 permits in the Little Snake River drainage portion of Carbon County. The daily bag limit would be 3, with season and possession limits of 6. Where applicable, the season must be concurrent with the September portion of the sandhill crane season.

Service Response: We concur with the recommendations from the Upper- and Lower-Region Regulations Committees of the Mississippi Flyway Council and the Pacific Flyway Council. We also concur with the Atlantic Flyway Council's request regarding North Carolina and Rhode Island. Regarding the recommendation to increase the daily bag limit in the September Canada goose seasons from 5 to 8, we concur, but believe that the possession limit should be 16.

Regarding South Dakota's experimental September Canada goose season, we believe the season should remain experimental until a final report is prepared, approved by the Flyway Council, and transmitted to us. This is consistent with the normal procedures experimental season approval. We do not concur with the recommendation for operational status of any areas outside the current experimental area. Special seasons after September 15 in other portions of the State initially must be experimental.

B. Regular Seasons

Council Recommendations: The Upper- and Lower-Region Regulations Committees of the Mississippi Flyway Council recommended that the framework opening date for all species of geese for the regular goose seasons in Michigan and Wisconsin be September 16, 2003.

Service Response: We concur.

9. Sandhill Cranes

Council Recommendations: The Central Flyway Council recommended the 2002 Rocky Mountain population of sandhill cranes harvest allocation be 668 birds as proposed by the Pacific Flyway.

Service Response: We concur.

20. Puerto Rico

Written Comments: The Puerto Rico Department of Natural and Environmental Resources requested increasing the aggregate dove daily bag limit from 10 to 15, including no more than 3 mourning doves.

Service Response: We concur.

NEPA Consideration

NEPA considerations are covered by the programmatic document, ''Final Supplemental Environmental Impact Statement: Issuance of Annual Regulations Permitting the Sport Hunting of Migratory Birds (FSES 88–14),'' filed with the Environmental Protection Agency on June 9, 1988. We published a Notice of Availability in the **Federal Register** on June 16, 1988 (53 FR 22582) and our Record of Decision on August 18, 1988 (53 FR 31341). Copies are available from the address indicated under **ADDRESSES.** Additionally, in a proposed rule published in the April 30, 2001, **Federal Register** (66 FR 21298), we expressed our intent to begin the process of developing a new EIS for the migratory bird hunting program. We plan to begin the public scoping process in 2005.

Endangered Species Act Consideration

Section 7 of the Endangered Species Act, as amended (16 U.S.C. 1531–1543; 87 Stat. 884), provides that, ''The Secretary shall review other programs administered by him and utilize such programs in furtherance of the purposes of this Act'' (and) shall ''insure that any action authorized, funded or carried out * * * is not likely to jeopardize the continued existence of any endangered species or threatened species or result in the destruction or adverse modification of [critical] habitat * * *.'' Consequently, we conducted formal consultations to ensure that actions resulting from these regulations would not likely jeopardize the continued existence of endangered or threatened species or result in the destruction or adverse modification of their critical habitat. Findings from these consultations are included in a biological opinion, which concluded that the regulations are not likely to adversely affect any endangered or threatened species. Additionally, these findings may have caused modification of some regulatory measures previously proposed, and the final frameworks reflect any such modifications. Our biological opinions resulting from this Section 7 consultation are public documents available for public inspection at the address indicated under **ADDRESSES.**

Executive Order 12866

The migratory bird hunting regulations are economically significant and were reviewed by the Office of Management and Budget (OMB) under Executive Order 12866. As such, a cost/benefit analysis was initially prepared in 1981. This analysis was subsequently revised annually from 1990–96, and then updated in 1998. We will update again in 2004. It is further discussed below under the heading Regulatory Flexibility Act. Results from the 1998 analysis indicate that the expected welfare benefit of the annual migratory bird hunting frameworks is on the order of $50 to $192 million. Copies of the cost/benefit analysis are available upon request from the address indicated under **ADDRESSES.**

Regulatory Flexibility Act

These regulations have a significant economic impact on substantial numbers of small entities under the Regulatory Flexibility Act (5 U.S.C. 601 *et seq.*). We analyzed the economic impacts of the annual hunting regulations on small business entities in detail as part of the 1981 cost-benefit analysis discussed under Executive Order 12866. This analysis was revised annually from 1990–95. In 1995, the Service issued a Small Entity Flexibility Analysis (Analysis), which was subsequently updated in 1996 and 1998 and will be updated in 2004. The primary source of information about hunter expenditures for migratory game bird hunting is the National Hunting and Fishing Survey, which is conducted at 5-year intervals. The 1998 Analysis was based on the 1996 National Hunting and Fishing Survey and the U.S. Department of Commerce's County Business Patterns, from which it was estimated that migratory bird hunters would spend between $429 million and $1.084 billion at small businesses in

2003. Copies of the Analysis are available upon request from the address indicated under **ADDRESSES.**

Small Business Regulatory Enforcement Fairness Act

This rule is a major rule under 5 U.S.C. 804(2), the Small Business Regulatory Enforcement Fairness Act. For the reasons outlined above, this rule has an annual effect on the economy of $100 million or more. However, because this rule establishes hunting seasons, we do not plan to defer the effective date required by 5 U.S.C. 801 under the exemption contained in 5 U.S.C. 808(1).

Paperwork Reduction Act

We examined these regulations under the Paperwork Reduction Act of 1995. We utilize the various recordkeeping and reporting requirements imposed under regulations established in 50 CFR part 20, Subpart K, in the formulation of migratory game bird hunting regulations. Specifically, OMB has approved the information collection requirements of the Migratory Bird Harvest Information Program and assigned clearance number 1018–0015 (expires 10/31/2004). This information is used to provide a sampling frame for voluntary national surveys to improve our harvest estimates for all migratory game birds in order to better manage these populations. OMB has also approved the information collection requirements of the Sandhill Crane Harvest Questionnaire and assigned clearance number 1018–0023 (expires 10/31/2004). The information from this survey is used to estimate the magnitude and the geographical and temporal distribution of harvest, and the portion it constitutes of the total population. A Federal agency may not conduct or sponsor, and a person is not required to respond to, a collection of information unless it displays a currently valid OMB control number.

Unfunded Mandates Reform Act

We have determined and certify, in compliance with the requirements of the Unfunded Mandates Reform Act, 2 U.S.C. 1502 *et seq.*, that this rulemaking will not ''significantly or uniquely'' affect small governments, and will not produce a Federal mandate of $100 million or more in any given year on local or State government or private entities. Therefore, this rule is not a ''significant regulatory action'' under the Unfunded Mandates Reform Act.

Civil Justice Reform—Executive Order 12988

The Department, in promulgating this rule, has determined that this rule will not unduly burden the judicial system and meets the requirements of sections 3(a) and 3(b)(2) of Executive Order 12988.

Government-to-Government Relationship With Tribes

In accordance with the President's memorandum of April 29, 1994, ''Government-to-Government Relations with Native American Tribal Governments'' (59 FR 22951), Executive Order 13175, and 512 DM 2, we have evaluated possible effects on Federally recognized Indian tribes and have determined that there are no effects.

Energy Effects—Executive Order 13211

On May 18, 2001, the President issued Executive Order 13211 on regulations that significantly affect energy supply, distribution, and use. Executive Order 13211 requires agencies to prepare Statements of Energy Effects when undertaking certain actions. While this rule is a significant regulatory action under Executive Order 12866, it is not expected to adversely affect energy supplies, distribution, or use. Thus, this action is not a significant energy action and no Statement of Energy Effects is required.

Takings Implication Assessment

In accordance with Executive Order 12630, this rule does not have significant takings implications and does not affect any constitutionally protected property rights. This rule will not result in the physical occupancy of property, the physical invasion of property, or the regulatory taking of any property. In fact, this rule will allow hunters to exercise otherwise unavailable privileges, and, therefore, reduces restrictions on the use of private and public property.

Federalism Effects

Due to the migratory nature of certain species of birds, the Federal Government has been given responsibility over these species by the Migratory Bird Treaty Act (MBTA). Annually, we prescribe frameworks from which the States make selections and employ guidelines to establish special regulations on Federal Indian reservations and ceded lands. We develop the frameworks in a cooperative process with the States and the Flyway Councils. This process allows States to participate in the development of frameworks from which they will ultimately make season selections, thereby having an influence on their own regulations. This process preserves the ability of the States and Tribes to determine which seasons meet their individual needs. Further, any State or Tribe may be more restrictive than the Federal frameworks at any time. These rules do not have a substantial direct effect on fiscal capacity, change the roles or responsibilities of Federal or State governments, or intrude on State policy or administration. Therefore, in accordance with Executive Order 13132, these regulations do not have significant federalism effects and do not have sufficient federalism implications to warrant the preparation of a Federalism Assessment.

Regulations Promulgation

The rulemaking process for migratory game bird hunting must, by its nature, operate under severe time constraints. However, we intend that the public be given the greatest possible opportunity to comment. Thus, when the preliminary proposed rulemaking was published, we established what we believed were the longest periods possible for public comment. In doing this, we recognized that when the comment period closed, time would be of the essence. That is, if there were a delay in the effective date of these regulations after this final rulemaking, States would have insufficient time to select season dates and limits; to communicate those selections to us; and to establish and publicize the necessary regulations and procedures to implement their decisions. We therefore find that ''good cause'' exists, within the terms of 5 U.S.C. 553(d)(3) of the Administrative Procedure Act, and these frameworks will, therefore, take effect immediately upon publication.

Therefore, under authority of the Migratory Bird Treaty Act (July 3, 1918), as amended, (16 U.S.C. 703–711), we prescribe final frameworks setting forth the species to be hunted, the daily bag and possession limits, the shooting hours, the season lengths, the earliest opening and latest closing season dates, and hunting areas, from which State conservation agency officials will select hunting season dates and other options. Upon receipt of season and option selections from these officials, we will publish in the **Federal Register** a final rulemaking amending 50 CFR part 20 to reflect seasons, limits, and shooting hours for the conterminous United States for the 2003–04 season.

List of Subjects in 50 CFR Part 20

Exports, Hunting, Imports, Reporting and recordkeeping requirements, Transportation, Wildlife.

The rules that eventually will be promulgated for the 2003–04 hunting season are authorized under 16 U.S.C.

703–712 and 16 U.S.C. 742 a-j, Pub. L. 106–108.

Dated: August 8, 2003.

Craig Manson,

Assistant Secretary for Fish and Wildlife and Parks.

Final Regulations Frameworks for 2003–04 Early Hunting Seasons on Certain Migratory Game Birds

Pursuant to the Migratory Bird Treaty Act and delegated authorities, the Department of the Interior approved the following frameworks, which prescribe season lengths, bag limits, shooting hours, and outside dates, within which States may select for certain migratory game birds between September 1, 2003, and March 10, 2004.

General

Dates: All outside dates noted below are inclusive.

Shooting and Hawking (taking by falconry) Hours: Unless otherwise specified, from one-half hour before sunrise to sunset daily.

Possession Limits: Unless otherwise specified, possession limits are twice the daily bag limit.

Flyways and Management Units

Waterfowl Flyways

Atlantic Flyway—includes Connecticut, Delaware, Florida, Georgia, Maine, Maryland, Massachusetts, New Hampshire, New Jersey, New York, North Carolina, Pennsylvania, Rhode Island, South Carolina, Vermont, Virginia, and West Virginia.

Mississippi Flyway—includes Alabama, Arkansas, Illinois, Indiana, Iowa, Kentucky, Louisiana, Michigan, Minnesota, Mississippi, Missouri, Ohio, Tennessee, and Wisconsin.

Central Flyway—includes Colorado (east of the Continental Divide), Kansas, Montana (Counties of Blaine, Carbon, Fergus, Judith Basin, Stillwater, Sweetgrass, Wheatland, and all counties east thereof), Nebraska, New Mexico (east of the Continental Divide except the Jicarilla Apache Indian Reservation), North Dakota, Oklahoma, South Dakota, Texas, and Wyoming (east of the Continental Divide).

Pacific Flyway—includes Alaska, Arizona, California, Idaho, Nevada, Oregon, Utah, Washington, and those portions of Colorado, Montana, New Mexico, and Wyoming not included in the Central Flyway.

Management Units

Mourning Dove Management Units

Eastern Management Unit—All States east of the Mississippi River, and Louisiana.

Central Management Unit—Arkansas, Colorado, Iowa, Kansas, Minnesota, Missouri, Montana, Nebraska, New Mexico, North Dakota, Oklahoma, South Dakota, Texas, and Wyoming.

Western Management Unit—Arizona, California, Idaho, Nevada, Oregon, Utah, and Washington.

Woodcock Management Regions:

Eastern Management Region—Connecticut, Delaware, Florida, Georgia, Maine, Maryland, Massachusetts, New Hampshire, New Jersey, New York, North Carolina, Pennsylvania, Rhode Island, South Carolina, Vermont, Virginia, and West Virginia.

Central Management Region—Alabama, Arkansas, Illinois, Indiana, Iowa, Kansas, Kentucky, Louisiana, Michigan, Minnesota, Mississippi, Missouri, Nebraska, North Dakota, Ohio, Oklahoma, South Dakota, Tennessee, Texas, and Wisconsin.

Other geographic descriptions are contained in a later portion of this document.

Compensatory Days in the Atlantic Flyway: In the Atlantic Flyway States of Connecticut, Delaware, Maine, Maryland, Massachusetts, New Jersey, North Carolina, Pennsylvania, and Virginia, where Sunday hunting is prohibited statewide by State law, all Sundays are closed to all take of migratory waterfowl (including mergansers and coots).

Special September Teal Season

Outside Dates: Between September 1 and September 30, an open season on all species of teal may be selected by the following States in areas delineated by State regulations:

Atlantic Flyway—Delaware, Florida, Georgia, Maryland, North Carolina, South Carolina, and Virginia.

Mississippi Flyway—Alabama, Arkansas, Illinois, Indiana, Kentucky, Louisiana, Mississippi, Missouri, Ohio, and Tennessee.

Central Flyway—Colorado (part), Kansas, Nebraska (part), New Mexico (part), Oklahoma, and Texas. The season in Nebraska is experimental.

Hunting Seasons and Daily Bag Limits: Not to exceed 16 consecutive days, except in the Atlantic Flyway and Nebraska in the Central Flyway, where the season may not exceed 9 consecutive days. The daily bag limit is 4 teal.

Shooting Hours:

Atlantic Flyway—One-half hour before sunrise to sunset except in Maryland, where the hours are from sunrise to sunset.

Mississippi and Central Flyways—One-half hour before sunrise to sunset, except in the States of Arkansas, Illinois, Indiana, Missouri, and Ohio, where the hours are from sunrise to sunset.

Special September Duck Seasons

Florida, Kentucky and Tennessee: In lieu of a special September teal season, a 5-consecutive-day season may be selected in September. The daily bag limit may not exceed 4 teal and wood ducks in the aggregate, of which no more than 2 may be wood ducks.

Iowa: Iowa may hold up to 5 days of its regular duck hunting season in September. All ducks that are legal during the regular duck season may be taken during the September segment of the season. The September season segment may commence no earlier than the Saturday nearest September 20 (September 20). The daily bag and possession limits will be the same as those in effect last year, but are subject to change during the late-season regulations process. The remainder of the regular duck season may not begin before October 10.

Special Youth Waterfowl Hunting Days

Outside Dates: States may select two consecutive days (hunting days in Atlantic Flyway States with compensatory days) per duck-hunting zone, designated as ''Youth Waterfowl Hunting Days,'' in addition to their regular duck seasons. The days must be held outside any regular duck season on a weekend, holidays, or other non-school days when youth hunters would have the maximum opportunity to participate. The days may be held up to 14 days before or after any regular duck-season frameworks or within any split of a regular duck season, or within any other open season on migratory birds.

Daily Bag Limits: The daily bag limits may include ducks, geese, mergansers, coots, moorhens, and gallinules and would be the same as those allowed in the regular season. Flyway species and area restrictions would remain in effect.

Shooting Hours: One-half hour before sunrise to sunset.

Participation Restrictions: Youth hunters must be 15 years of age or younger. In addition, an adult at least 18 years of age must accompany the youth hunter into the field. This adult may not duck hunt but may participate in other seasons that are open on the special youth day.

Scoter, Eider, and Oldsquaw Ducks (Atlantic Flyway)

Outside Dates: Between September 15 and January 31.

Hunting Seasons and Daily Bag Limits: Not to exceed 107 days, with a

daily bag limit of 7, singly or in the aggregate of the listed sea-duck species, of which no more than 4 may be scoters.

Daily Bag Limits During the Regular Duck Season: Within the special sea duck areas, during the regular duck season in the Atlantic Flyway, States may choose to allow the above sea duck limits in addition to the limits applying to other ducks during the regular duck season. In all other areas, sea ducks may be taken only during the regular open season for ducks and are part of the regular duck season daily bag (not to exceed 4 scoters) and possession limits.

Areas: In all coastal waters and all waters of rivers and streams seaward from the first upstream bridge in Maine, New Hampshire, Massachusetts, Rhode Island, Connecticut, and New York; in any waters of the Atlantic Ocean and in any tidal waters of any bay which are separated by at least 1 mile of open water from any shore, island, and emergent vegetation in New Jersey, South Carolina, and Georgia; and in any waters of the Atlantic Ocean and in any tidal waters of any bay which are separated by at least 800 yards of open water from any shore, island, and emergent vegetation in Delaware, Maryland, North Carolina and Virginia; and provided that any such areas have been described, delineated, and designated as special sea-duck hunting areas under the hunting regulations adopted by the respective States.

Special Early Canada Goose Seasons

Atlantic Flyway

General Seasons: Canada goose seasons of up to 15 days during September 1–15 may be selected for the Eastern Unit of Maryland and Delaware. Seasons not to exceed 30 days during September 1–30 may be selected for the Northeast Hunt Unit of North Carolina, New Jersey, and Rhode Island. Except for experimental seasons described below, seasons may not exceed 25 days during September 1–25 in the remainder of the Flyway. Areas open to the hunting of Canada geese must be described, delineated, and designated as such in each State's hunting regulations.

Daily Bag Limits: Not to exceed 8 Canada geese.

Experimental Seasons: Experimental Canada goose seasons of up to 25 days during September 1–25 may be selected for the Montezuma Region of New York and the Lake Champlain Region of New York and Vermont. Experimental seasons of up to 30 days during September 1–30 may be selected by Connecticut, Florida, Georgia, New York (Long Island Zone), North Carolina (except in the Northeast Hunt Unit), and South Carolina. Areas open to the hunting of Canada geese must be described, delineated, and designated as such in each State's hunting regulations.

Daily Bag Limits: Not to exceed 8 Canada geese.

Mississippi Flyway

General Seasons: Canada goose seasons of up to 15 days during September 1–15 may be selected, except in the Upper Peninsula in Michigan, where the season may not extend beyond September 10, and in Minnesota (except in the Northwest Goose Zone), where a season of up to 22 days during September 1–22 may be selected. The daily bag limit may not exceed 5 Canada geese. Areas open to the hunting of Canada geese must be described, delineated, and designated as such in each State's hunting regulations.

An experimental Canada goose season of up to 10 consecutive days during September 1–10 may be selected by Michigan for Huron, Saginaw, and Tuscola Counties, except that the Shiawassee National Wildlife Refuge, Shiawassee River State Game Area Refuge, and the Fish Point Wildlife Area Refuge will remain closed. The daily bag limit may not exceed 2 Canada geese.

Central Flyway

General Seasons: Canada goose seasons of up to 15 days during September 1–15 may be selected. The daily bag limit may not exceed 5 Canada geese. Areas open to the hunting of Canada geese must be described, delineated, and designated as such in each State's hunting regulations.

Experimental Seasons: An experimental Canada goose season of up to 12 consecutive days during September 16–27 may be selected by South Dakota. The daily bag limit may not exceed 5 Canada geese.

An experimental Canada goose season of up to 9 consecutive days during September 22–30 may be selected by Oklahoma. The daily bag limit may not exceed 5 Canada geese.

Pacific Flyway

General Seasons: California may select a 9-day season in Humboldt County during the period September 1–15. The daily bag limit is 2.

Colorado may select a 9-day season during the period of September 1–15. The daily bag limit is 3.

Oregon may select a special Canada goose season of up to 15 days during the period September 1–15. In addition, in the NW goose management zone in Oregon, a 15-day season may be selected during the period September 1–20. Daily bag limits may not exceed 5 Canada geese.

Idaho may select a 7-day season in the special East Canada Goose Zone, as described in State regulations, during the period September 1–15. All participants must have a valid State permit, and the total number of permits issued is not to exceed 110 for this zone. The daily bag limit is 2.

Idaho may select a 7-day Canada goose season during the period September 1–15 in Nez Perce County, with a bag limit of 4.

Washington may select a special Canada goose season of up to 15 days during the period September 1–15. Daily bag limits may not exceed 5 Canada geese.

Wyoming may select an 8-day season on Canada geese between September 1–15. This season is subject to the following conditions:

1. Where applicable, the season must be concurrent with the September portion of the sandhill crane season.
2. All participants must have a valid State permit for the special season.
3. A daily bag limit of 3, with season and possession limits of 6, will apply to the special season.

Areas open to hunting of Canada geese in each State must be described, delineated, and designated as such in each State's hunting regulations.

Regular Goose Seasons

Regular goose seasons may open as early as September 16 in Wisconsin and Michigan. Season lengths, bag and possession limits, and other provisions will be established during the late-season regulations process.

Sandhill Cranes

Regular Seasons in the Central Flyway:

Outside Dates: Between September 1 and February 28.

Hunting Seasons: Seasons not to exceed 37 consecutive days may be selected in designated portions of North Dakota (Area 2) and Texas (Area 2). Seasons not to exceed 58 consecutive days may be selected in designated portions of the following States: Colorado, Kansas, Montana, North Dakota, South Dakota, and Wyoming. Seasons not to exceed 93 consecutive days may be selected in designated portions of the following States: New Mexico, Oklahoma, and Texas.

Daily Bag Limits: 3 sandhill cranes, except 2 sandhill cranes in designated portions of North Dakota (Area 2) and Texas (Area 2).

Permits: Each person participating in the regular sandhill crane seasons must have a valid Federal sandhill crane

hunting permit and/or, in those States where a Federal sandhill crane permit is not issued, a State-issued Harvest Information Survey Program (HIP) certification for game bird hunting in their possession while hunting.

Special Seasons in the Central and Pacific Flyways: Arizona, Colorado, Idaho, Montana, New Mexico, Utah, and Wyoming may select seasons for hunting sandhill cranes within the range of the Rocky Mountain Population (RMP) subject to the following conditions:

Outside Dates: Between September 1 and January 31.

Hunting Seasons: The season in any State or zone may not exceed 30 days.

Bag limits: Not to exceed 3 daily and 9 per season.

Permits: Participants must have a valid permit, issued by the appropriate State, in their possession while hunting.

Other provisions: Numbers of permits, open areas, season dates, protection plans for other species, and other provisions of seasons must be consistent with the management plan and approved by the Central and Pacific Flyway Councils with the following exceptions:

1. In Utah, the requirement for monitoring the racial composition of the harvest in the experimental season is waived, and 100 percent of the harvest will be assigned to the RMP quota;
2. In Arizona, the annual requirement for monitoring the racial composition of the harvest is changed to once every 3 years;
3. In Idaho, seasons are experimental, and the requirement for monitoring the racial composition of the harvest is waived; 100 percent of the harvest will be assigned to the RMP quota; and
4. In New Mexico, the season in the Estancia Valley is experimental, with a requirement to monitor the level and racial composition of the harvest; greater sandhill cranes in the harvest will be assigned to the RMP quota.

Common Moorhens and Purple Gallinules

Outside Dates: Between September 1 and January 20 in the Atlantic Flyway, and between September 1 and the Sunday nearest January 20 (January 18) in the Mississippi and Central Flyways. States in the Pacific Flyway have been allowed to select their hunting seasons between the outside dates for the season on ducks; therefore, they are late-season frameworks, and no frameworks are provided in this document.

Hunting Seasons and Daily Bag Limits: Seasons may not exceed 70 days in the Atlantic, Mississippi, and Central Flyways. Seasons may be split into 2 segments. The daily bag limit is 15 common moorhens and purple gallinules, singly or in the aggregate of the two species.

Zoning: Seasons may be selected by zones established for duck hunting.

Rails

Outside Dates: States included herein may select seasons between September 1 and January 20 on clapper, king, sora, and Virginia rails.

Hunting Seasons: The season may not exceed 70 days, and may be split into 2 segments.

Daily Bag Limits: Clapper and King Rails—In Rhode Island, Connecticut, New Jersey, Delaware, and Maryland, 10, singly or in the aggregate of the two species. In Texas, Louisiana, Mississippi, Alabama, Georgia, Florida, South Carolina, North Carolina, and Virginia, 15, singly or in the aggregate of the two species.

Sora and Virginia Rails—In the Atlantic, Mississippi, and Central Flyways and the Pacific-Flyway portions of Colorado, Montana, New Mexico, and Wyoming, 25 daily and 25 in possession, singly or in the aggregate of the two species. The season is closed in the remainder of the Pacific Flyway.

Common Snipe

Outside Dates: Between September 1 and February 28, except in Maine, Vermont, New Hampshire, Massachusetts, Rhode Island, Connecticut, New York, New Jersey, Delaware, Maryland, and Virginia, where the season must end no later than January 31.

Hunting Seasons and Daily Bag Limits: Seasons may not exceed 107 days and may be split into two segments. The daily bag limit is 8 snipe.

Zoning: Seasons may be selected by zones established for duck hunting.

American Woodcock

Outside Dates: States in the Eastern Management Region may select hunting seasons between October 1 and January 31. States in the Central Management Region may select hunting seasons between the Saturday nearest September 22 (September 20) and January 31.

Hunting Seasons and Daily Bag Limits: Seasons may not exceed 30 days in the Eastern Region and 45 days in the Central Region. The daily bag limit is 3. Seasons may be split into two segments.

Zoning: New Jersey may select seasons in each of two zones. The season in each zone may not exceed 24 days.

Band-Tailed Pigeons

Pacific Coast States (California, Oregon, Washington, and Nevada)

Outside Dates: Between September 15 and January 1.

Hunting Seasons and Daily Bag Limits: Not more than 9 consecutive days, with a daily bag limit of 2 band-tailed pigeons.

Zoning: California may select hunting seasons not to exceed 9 consecutive days in each of two zones. The season in the North Zone must close by October 3.

Four-Corners States (Arizona, Colorado, New Mexico, and Utah)

Outside Dates: Between September 1 and November 30.

Hunting Seasons and Daily Bag Limits: Not more than 30 consecutive days, with a daily bag limit of 5 band-tailed pigeons.

Zoning: New Mexico may select hunting seasons not to exceed 20 consecutive days in each of two zones. The season in the South Zone may not open until October 1.

Mourning Doves

Outside Dates: Between September 1 and January 15, except as otherwise provided, States may select hunting seasons and daily bag limits as follows:

Eastern Management Unit

Hunting Seasons and Daily Bag Limits: Not more than 70 days with a daily bag limit of 12, or not more than 60 days with a daily bag limit of 15.

Zoning and Split Seasons: States may select hunting seasons in each of two zones. The season within each zone may be split into not more than three periods. The hunting seasons in the South Zones of Alabama, Florida, Georgia, and Louisiana may commence no earlier than September 20. Regulations for bag and possession limits, season length, and shooting hours must be uniform within specific hunting zones.

Central Management Unit

Hunting Seasons and Daily Bag Limits: Not more than 70 days with a daily bag limit of 12, or not more than 60 days with a daily bag limit of 15 mourning and white-winged doves in the aggregate.

Zoning and Split Seasons: States may select hunting seasons in each of two zones. The season within each zone may be split into not more than three periods.

Texas may select hunting seasons for each of three zones subject to the following conditions:

A. The hunting season may be split into not more than two periods, except in that portion of Texas in which the special white-winged dove season is allowed, where a limited mourning dove season may be held concurrently with that special season (see white-winged dove frameworks).

B. A season may be selected for the North and Central Zones between September 1 and January 25; and for the South Zone between September 20 and January 25.

C. Daily bag limits are aggregate bag limits with mourning, white-winged, and white-tipped doves (see white-winged dove frameworks for specific daily bag limit restrictions).

D. Except as noted above, regulations for bag and possession limits, season length, and shooting hours must be uniform within each hunting zone.

Western Management Unit

Hunting Seasons and Daily Bag Limits: Idaho, Oregon, Utah, and Washington—Not more than 30 consecutive days with a daily bag limit of 10 mourning doves.

Nevada—Not more than 30 consecutive days with a daily bag limit of 10 mourning doves, except in Clark and Nye Counties where the daily bag limit may not exceed 10 mourning and white-winged doves in the aggregate.

Arizona and California—Not more than 60 days, which may be split between two periods, September 1–15 and November 1-January 15. In Arizona, during the first segment of the season, the daily bag limit is 10 mourning and white-winged doves in the aggregate, of which no more than 6 may be white-winged doves. During the remainder of the season, the daily bag limit is 10 mourning doves. In California, the daily bag limit is 10 mourning doves, except in Imperial, Riverside, and San Bernardino Counties where the daily bag limit may not exceed 10 mourning and white-winged doves in the aggregate.

White-Winged and White-Tipped Doves

Hunting Seasons and Daily Bag Limits: Except as shown below, seasons must be concurrent with mourning dove seasons.

Eastern Management Unit

In Florida, the daily bag limit may not exceed 12 mourning and white-winged doves (15 under the alternative) in the aggregate, of which no more than 4 may be white-winged doves.

In the remainder of the Eastern Management Unit, the season is closed.

Central Management Unit

In Texas, the daily bag limit may not exceed 12 mourning, white-winged, and white-tipped doves (15 under the alternative) in the aggregate, of which no more than 2 may be white-tipped doves. In addition, Texas also may select a hunting season of not more than 4 days for the special white-winged dove area of the South Zone between September 1 and September 19. The daily bag limit may not exceed 10 white-winged, mourning, and white-tipped doves in the aggregate, of which no more than 5 may be mourning doves and 2 may be white-tipped doves.

In the remainder of the Central Management Unit, the daily bag limit may not exceed 12 (15 under the alternative) mourning and white-winged doves in the aggregate.

Western Management Unit

Arizona may select a hunting season of not more than 30 consecutive days, running concurrently with the first segment of the mourning dove season. The daily bag limit may not exceed 10 mourning and white-winged doves in the aggregate, of which no more than 6 may be white-winged doves.

In the Nevada Counties of Clark and Nye, and in the California Counties of Imperial, Riverside, and San Bernardino, the daily bag limit may not exceed 10 mourning and white-winged doves in the aggregate.

In the remainder of the Western Management Unit, the season is closed.

Alaska

Outside Dates: Between September 1 and January 26.

Hunting Seasons: Alaska may select 107 consecutive days for waterfowl, sandhill cranes, and common snipe in each of five zones. The season may be split without penalty in the Kodiak Zone. The seasons in each zone must be concurrent.

Closures: The season is closed on Canada geese from Unimak Pass westward in the Aleutian Island chain. The hunting season is closed on emperor geese, spectacled eiders, and Steller's eiders.

Daily Bag and Possession Limits: Ducks—Except as noted, a basic daily bag limit of 7 and a possession limit of 21 ducks. Daily bag and possession limits in the North Zone are 10 and 30, and in the Gulf Coast Zone, they are 8 and 24, respectively. The basic limits may include no more than 1 canvasback daily and 3 in possession and may not include sea ducks.

In addition to the basic duck limits, Alaska may select sea duck limits of 10 daily, 20 in possession, singly or in the aggregate, including no more than 6 each of either harlequin or long-tailed ducks. Sea ducks include scoters, common and king eiders, harlequin ducks, long-tailed ducks, and common and red-breasted mergansers.

Light Geese—A basic daily bag limit of 3 and a possession limit of 6.

Dark Geese—A basic daily bag limit of 4 and a possession limit of 8.

Dark-goose seasons are subject to the following exceptions:

1. In Units 5 and 6, the taking of Canada geese is permitted from September 28 through December 16. A special, permit-only Canada goose season may be offered on Middleton Island. No more than 10 permits can be issued. A mandatory goose identification class is required. Hunters must check in and check out. The bag limit is 1 daily and 1 in possession. The season will close if incidental harvest includes 5 dusky Canada geese. A dusky Canada goose is any dark-breasted Canada goose (Munsell 10 YR color value five or less) with a bill length between 40 and 50 millimeters.

2. In Unit 10 (except Unimak Island), the taking of Canada geese is prohibited.

3. In Unit 9(D) and the Unimak Island portion of Unit 10, the limits for dark geese are 6 daily and 12 in possession.

Brant—A daily bag limit of 2.

Common snipe—A daily bag limit of 8.

Sandhill cranes—Bag and possession limits of 2 and 4, respectively, in the Southeast, Gulf Coast, Kodiak, and Aleutian Zones, and Unit 17 in the Northern Zone. In the remainder of the Northern Zone (outside Unit 17), bag and possession limits of 3 and 6, respectively.

Tundra Swans—Open seasons for tundra swans may be selected subject to the following conditions:

1. All seasons are by registration permit only.

2. All season framework dates are September 1–October 31.

3. In Game Management Unit (GMU) 17, an experimental season may be selected. No more than 200 permits may be issued for this during the experimental season. No more than 3 tundra swans may be authorized per permit with no more than 1 permit issued per hunter per season. An evaluation of the season must be completed, adhering to the guidelines for experimental seasons as described in the Pacific Flyway Management Plan for the Western Population of (tundra) Swans.

4. In Game Management Unit (GMU) 18, no more than 500 permits may be issued during the operational season.

Up to 3 tundra swans may be authorized per permit. No more than 1 permit may be issued per hunter per season.

5. In GMU 22, no more than 300 permits may be issued during the operational season. Each permittee may be authorized to take up to 3 tundra swan per permit. No more than 1 permit may be issued per hunter per season.

6. In GMU 23, no more than 300 permits may be issued during the operational season. No more than 3 tundra swans may be authorized per permit with no more than 1 permit issued per hunter per season.

Hawaii

Outside Dates: Between October 1 and January 31.

Hunting Seasons: Not more than 65 days (75 under the alternative) for mourning doves.

Bag Limits: Not to exceed 15 (12 under the alternative) mourning doves.

Note: Mourning doves may be taken in Hawaii in accordance with shooting hours and other regulations set by the State of Hawaii, and subject to the applicable provisions of 50 CFR part 20.

Puerto Rico

Doves and Pigeons:

Outside Dates: Between September 1 and January 15.

Hunting Seasons: Not more than 60 days.

Daily Bag and Possession Limits: Not to exceed 15 Zenaida, mourning, and white-winged doves in the aggregate, of which not more than 3 may be mourning doves. Not to exceed 5 scaly-naped pigeons.

Closed Areas: There is no open season on doves or pigeons in the following areas: Municipality of Culebra, Desecheo Island, Mona Island, El Verde Closure Area, and Cidra Municipality and adjacent areas.

Ducks, Coots, Moorhens, Gallinules, and Snipe:

Outside Dates: Between October 1 and January 31.

Hunting Seasons: Not more than 55 days may be selected for hunting ducks, common moorhens, and common snipe. The season may be split into two segments.

Daily Bag Limits:

Ducks—Not to exceed 6.

Common moorhens—Not to exceed 6.

Common snipe—Not to exceed 8.

Closed Seasons: The season is closed on the ruddy duck, white-cheeked pintail, West Indian whistling duck, fulvous whistling duck, and masked duck, which are protected by the Commonwealth of Puerto Rico. The season also is closed on the purple gallinule, American coot, and Caribbean coot.

Closed Areas: There is no open season on ducks, common moorhens, and common snipe in the Municipality of Culebra and on Desecheo Island.

Virgin Islands

Doves and Pigeons:

Outside Dates: Between September 1 and January 15.

Hunting Seasons: Not more than 60 days for Zenaida doves.

Daily Bag and Possession Limits: Not to exceed 10 Zenaida doves.

Closed Seasons: No open season is prescribed for ground or quail doves, or pigeons in the Virgin Islands.

Closed Areas: There is no open season for migratory game birds on Ruth Cay (just south of St. Croix).

Local Names for Certain Birds: Zenaida dove, also known as mountain dove; bridled quail-dove, also known as Barbary dove or partridge; Common ground-dove, also known as stone dove, tobacco dove, rola, or tortolita; scaly-naped pigeon, also known as red-necked or scaled pigeon.

Ducks:

Outside Dates: Between December 1 and January 31.

Hunting Seasons: Not more than 55 consecutive days.

Daily Bag Limits: Not to exceed 6.

Closed Seasons: The season is closed on the ruddy duck, white-cheeked pintail, West Indian whistling duck, fulvous whistling duck, and masked duck.

Special Falconry Regulations

Falconry is a permitted means of taking migratory game birds in any State meeting Federal falconry standards in 50 CFR 21.29(k). These States may select an extended season for taking migratory game birds in accordance with the following:

Extended Seasons: For all hunting methods combined, the combined length of the extended season, regular season, and any special or experimental seasons must not exceed 107 days for any species or group of species in a geographical area. Each extended season may be divided into a maximum of 3 segments.

Framework Dates: Seasons must fall between September 1 and March 10.

Daily Bag and Possession Limits: Falconry daily bag and possession limits for all permitted migratory game birds must not exceed 3 and 6 birds, respectively, singly or in the aggregate, during extended falconry seasons, any special or experimental seasons, and regular hunting seasons in all States, including those that do not select an extended falconry season.

Regular Seasons: General hunting regulations, including seasons and hunting hours, apply to falconry in each State listed in 50 CFR 21.29(k). Regular-season bag and possession limits do not apply to falconry. The falconry bag limit is not in addition to gun limits.

Area, Unit, and Zone Descriptions

Mourning and White-Winged Doves

Alabama

South Zone—Baldwin, Barbour, Coffee, Conecuh, Covington, Dale, Escambia, Geneva, Henry, Houston, and Mobile Counties.

North Zone—Remainder of the State.

California

White-winged Dove Open Areas—Imperial, Riverside, and San Bernardino Counties.

Florida

Northwest Zone—The Counties of Bay, Calhoun, Escambia, Franklin, Gadsden, Gulf, Holmes, Jackson, Liberty, Okaloosa, Santa Rosa, Walton, Washington, Leon (except that portion north of U.S. 27 and east of State Road 155), Jefferson (south of U.S. 27, west of State Road 59 and north of U.S. 98), and Wakulla (except that portion south of U.S. 98 and east of the St. Marks River).

South Zone—Remainder of State.

Georgia

Northern Zone—That portion of the State lying north of a line running west to east along U.S. Highway 280 from Columbus to Wilcox County, thence southward along the western border of Wilcox County; thence east along the southern border of Wilcox County to the Ocmulgee River, thence north along the Ocmulgee River to Highway 280, thence east along Highway 280 to the Little Ocmulgee River; thence southward along the Little Ocmulgee River to the Ocmulgee River; thence southwesterly along the Ocmulgee River to the western border of Jeff Davis County; thence south along the western border of Jeff Davis County; thence east along the southern border of Jeff Davis and Appling Counties; thence north along the eastern border of Appling County, to the Altamaha River; thence east to the eastern border of Tattnall County; thence north along the eastern border of Tattnall County; thence north along the western border of Evans to Candler County; thence east along the northern border of Evans County to U.S. Highway 301; thence northeast along U.S. Highway 301 to the South Carolina line.

South Zone—Remainder of the State.

Louisiana

North Zone—That portion of the State north of Interstate Highway 10 from the

Texas State line to Baton Rouge, Interstate Highway 12 from Baton Rouge to Slidell and Interstate Highway 10 from Slidell to the Mississippi State line.

South Zone—The remainder of the State.

Nevada

White-Winged Dove Open Areas—Clark and Nye Counties.

Texas

North Zone—That portion of the State north of a line beginning at the International Bridge south of Fort Hancock; north along FM 1088 to TX 20; west along TX 20 to TX 148; north along TX 148 to I–10 at Fort Hancock; east along I–10 to I–20; northeast along I–20 to I–30 at Fort Worth; northeast along I–30 to the Texas-Arkansas State line.

South Zone—That portion of the State south and west of a line beginning at the International Bridge south of Del Rio, proceeding east on U.S. 90 to San Antonio; then east on I–10 to Orange, Texas.

Special White-winged Dove Area in the South Zone—That portion of the State south and west of a line beginning at the International Bridge south of Del Rio, proceeding east on U.S. 90 to Uvalde; south on U.S. 83 to TX 44; east along TX 44 to TX 16 at Freer; south along TX 16 to TX 285 at Hebbronville; east along TX 285 to FM 1017; southwest along FM 1017 to TX 186 at Linn; east along TX 186 to the Mansfield Channel at Port Mansfield; east along the Mansfield Channel to the Gulf of Mexico.

Area with additional restrictions—Cameron, Hidalgo, Starr, and Willacy Counties.

Central Zone—That portion of the State lying between the North and South Zones.

Band-tailed Pigeons

California

North Zone—Alpine, Butte, Del Norte, Glenn, Humboldt, Lassen, Mendocino, Modoc, Plumas, Shasta, Sierra, Siskiyou, Tehama, and Trinity Counties.

South Zone—The remainder of the State.

New Mexico

North Zone—North of a line following U.S. 60 from the Arizona State line east to I–25 at Socorro and then south along I–25 from Socorro to the Texas State line.

South Zone—Remainder of the State.

Washington

Western Washington—The State of Washington excluding those portions lying east of the Pacific Crest Trail and east of the Big White Salmon River in Klickitat County.

Woodcock

New Jersey

North Zone—That portion of the State north of NJ 70.

South Zone—The remainder of the State.

Special September Canada Goose Seasons

Atlantic Flyway

Connecticut

North Zone—That portion of the State north of I–95.

South Zone—Remainder of the State.

Maryland

Eastern Unit—Anne Arundel, Calvert, Caroline, Cecil, Charles, Dorchester, Harford, Kent, Queen Anne's, St. Mary's, Somerset, Talbot, Wicomico, and Worcester Counties, and those portions of Baltimore, Howard, and Prince George's Counties east of I–95.

Western Unit—Allegany, Carroll, Frederick, Garrett, Montgomery, and Washington Counties, and those portions of Baltimore, Howard, and Prince George's Counties west of I–95.

Massachusetts

Western Zone—That portion of the State west of a line extending south from the Vermont border on I–91 to MA 9, west on MA 9 to MA 10, south on MA 10 to U.S. 202, south on U.S. 202 to the Connecticut border.

Central Zone—That portion of the State east of the Berkshire Zone and west of a line extending south from the New Hampshire border on I–95 to U.S. 1, south on U.S. 1 to I–93, south on I–93 to MA 3, south on MA 3 to U.S. 6, west on U.S. 6 to MA 28, west on MA 28 to I–195, west to the Rhode Island border; except the waters, and the lands 150 yards inland from the high-water mark, of the Assonet River upstream to the MA 24 bridge, and the Taunton River upstream to the Center St.-Elm St. bridge will be in the Coastal Zone.

Coastal Zone—That portion of Massachusetts east and south of the Central Zone.

New York

Lake Champlain Zone—The U.S. portion of Lake Champlain and that area east and north of a line extending along NY 9B from the Canadian border to U.S. 9, south along U.S. 9 to NY 22 south of Keesville; south along NY 22 to the west shore of South Bay, along and around the shoreline of South Bay to NY 22 on the east shore of South Bay; southeast along NY 22 to U.S. 4, northeast along U.S. 4 to the Vermont border.

Long Island Zone—That area consisting of Nassau County, Suffolk County, that area of Westchester County southeast of I–95, and their tidal waters.

Western Zone—That area west of a line extending from Lake Ontario east along the north shore of the Salmon River to I–81, and south along I–81 to the Pennsylvania border, except for the Montezuma Zone.

Montezuma Zone—Those portions of Cayuga, Seneca, Ontario, Wayne, and Oswego Counties north of U.S. Route 20, east of NYS Route 14, south of NYS Route 104, and west of NYS Route 34.

Northeastern Zone—That area north of a line extending from Lake Ontario east along the north shore of the Salmon River to I–81, south along I–81 to NY 49, east along NY 49 to NY 365, east along NY 365 to NY 28, east along NY 28 to NY 29, east along NY 29 to I–87, north along I–87 to U.S. 9 (at Exit 20), north along U.S. 9 to NY 149, east along NY 149 to U.S. 4, north along U.S. 4 to the Vermont border, exclusive of the Lake Champlain Zone.

Southeastern Zone—The remaining portion of New York.

North Carolina

Northeast Hunt Unit—Counties of Bertie, Camden, Chowan, Currituck, Dare, Hyde, Pasquotank, Perquimans, Tyrrell, and Washington.

Vermont

Lake Champlain Zone: The U.S. portion of Lake Champlain and that area north and west of the line extending from the New York border along U.S. 4 to VT 22A at Fair Haven; VT 22A to U.S. 7 at Vergennes; U.S. 7 to the Canadian border.

Interior Zone: That portion of Vermont west of the Lake Champlain Zone and eastward of a line extending from the Massachusetts border at Interstate 91; north along Interstate 91 to U.S. 2; east along U.S. 2 to VT 102; north along VT 102 to VT 253; north along VT 253 to the Canadian border.

Connecticut River Zone: The remaining portion of Vermont east of the Interior Zone.

Mississippi Flyway

Illinois

Northeast Canada Goose Zone—Cook, Du Page, Grundy, Kane, Kankakee, Kendall, Lake, McHenry, and Will Counties.

North Zone: That portion of the State outside the Northeast Canada Goose Zone and north of a line extending east from the Iowa border along Illinois

Highway 92 to Interstate Highway 280, east along I–280 to I–80, then east along I–80 to the Indiana border.

Central Zone: That portion of the State outside the Northeast Canada Goose Zone and south of the North Zone to a line extending east from the Missouri border along the Modoc Ferry route to Modoc Ferry Road, east along Modoc Ferry Road to Modoc Road, northeasterly along Modoc Road and St. Leo's Road to Illinois Highway 3, north along Illinois 3 to Illinois 159, north along Illinois 159 to Illinois 161, east along Illinois 161 to Illinois 4, north along Illinois 4 to Interstate Highway 70, east along I–70 to the Bond County line, north and east along the Bond County line to Fayette County, north and east along the Fayette County line to Effingham County, east and south along the Effingham County line to I–70, then east along I–70 to the Indiana border.

South Zone: The remainder of Illinois.

Iowa

North Zone: That portion of the State north of a line extending east from the Nebraska border along State Highway 175 to State 37, southeast along State 37 to U.S. Highway 59, south along U.S. 59 to Interstate Highway 80, then east along I–80 to the Illinois border.

South Zone: The remainder of Iowa.

Cedar Rapids/Iowa City Goose Zone. Includes portions of Linn and Johnson Counties bounded as follows: Beginning at the intersection of the west border of Linn County and Linn County Road E2W; thence south and east along County Road E2W to Highway 920; thence north along Highway 920 to County Road E16; thence east along County Road E16 to County Road W58; thence south along County Road W58 to County Road E34; thence east along County Road E34 to Highway 13; thence south along Highway 13 to Highway 30; thence east along Highway 30 to Highway 1; thence south along Highway 1 to Morse Road in Johnson County; thence east along Morse Road to Wapsi Avenue; thence south along Wapsi Avenue to Lower West Branch Road; thence west along Lower West Branch Road to Taft Avenue; thence south along Taft Avenue to County Road F62; thence west along County Road F62 to Kansas Avenue; thence north along Kansas Avenue to Black Diamond Road; thence west on Black Diamond Road to Jasper Avenue; thence north along Jasper Avenue to Rohert Road; thence west along Rohert Road to Ivy Avenue; thence north along Ivy Avenue to 340th Street; thence west along 340th Street to Half Moon Avenue; thence north along Half Moon Avenue to Highway 6; thence west along Highway 6 to Echo Avenue; thence north along Echo Avenue to 250th Street; thence east on 250th Street to Green Castle Avenue; thence north along Green Castle Avenue to County Road F12; thence west along County Road F12 to County Road W30; thence north along County Road W30 to Highway 151; thence north along the Linn-Benton County line to the point of beginning.

Des Moines Goose Zone. Includes those portions of Polk, Warren, Madison and Dallas Counties bounded as follows: Beginning at the intersection of Northwest 158th Avenue and County Road R38 in Polk County; thence south along R38 to Northwest 142nd Avenue; thence east along Northwest 142nd Avenue to Northeast 126th Avenue; thence east along Northeast 126th Avenue to Northeast 46th Street; thence south along Northeast 46th Street to Highway 931; thence east along Highway 931 to Northeast 80th Street; thence south along Northeast 80th Street to Southeast 6th Avenue; thence west along Southeast 6th Avenue to Highway 65; thence south and west along Highway 65 to Highway 69 in Warren County; thence south along Highway 69 to County Road G24; thence west along County Road G24 to Highway 28; thence southwest along Highway 28 to 43rd Avenue; thence north along 43rd Avenue to Ford Street; thence west along Ford Street to Filmore Street; thence west along Filmore Street to 10th Avenue; thence south along 10th Avenue to 155th Street in Madison County; thence west along 155th Street to Cumming Road; thence north along Cumming Road to Badger Creek Avenue; thence north along Badger Creek Avenue to County Road F90 in Dallas County; thence east along County Road F90 to County Road R22; thence north along County Road R22 to Highway 44; thence east along Highway 44 to County Road R30; thence north along County Road R30 to County Road F31; thence east along County Road F31 to Highway 17; thence north along Highway 17 to Highway 415 in Polk County; thence east along Highway 415 to Northwest 158th Avenue; thence east along Northwest 158th Avenue to the point of beginning.

Michigan

North Zone: The Upper Peninsula.

Middle Zone: That portion of the Lower Peninsula north of a line beginning at the Wisconsin border in Lake Michigan due west of the mouth of Stony Creek in Oceana County; then due east to, and easterly and southerly along the south shore of, Stony Creek to Scenic Drive, easterly and southerly along Scenic Drive to Stony Lake Road, easterly along Stony Lake and Garfield Roads to Michigan Highway 20, east along Michigan 20 to U.S. Highway 10 Business Route (BR) in the city of Midland, east along U.S. 10 BR to U.S. 10, east along U.S. 10 to Interstate Highway 75/U.S. Highway 23, north along I–75/U.S. 23 to the U.S. 23 exit at Standish, east along U.S. 23 to Shore Road in Arenac County, east along Shore Road to the tip of Point Lookout, then on a line directly east 10 miles into Saginaw Bay, and from that point on a line directly northeast to the Canada border.

South Zone: The remainder of Michigan.

Minnesota

Twin Cities Metropolitan Canada Goose Zone—

A. All of Hennepin and Ramsey Counties.

B. In Anoka County, all of Columbus Township lying south of County State Aid Highway (CSAH) 18, Anoka County; all of the cities of Ramsey, Andover, Anoka, Coon Rapids, Spring Lake Park, Fridley, Hilltop, Columbia Heights, Blaine, Lexington, Circle Pines, Lino Lakes, and Centerville; and all of the city of Ham Lake except that portion lying north of CSAH 18 and east of U.S. Highway 65.

C. That part of Carver County lying north and east of the following described line: Beginning at the northeast corner of San Francisco Township; thence west along the north boundary of San Francisco Township to the east boundary of Dahlgren Township; thence north along the east boundary of Dahlgren Township to U.S. Highway 212; thence west along U.S. Highway 212 to State Trunk Highway (STH) 284; thence north on STH 284 to County State Aid Highway (CSAH) 10; thence north and west on CSAH 10 to CSAH 30; thence north and west on CSAH 30 to STH 25; thence east and north on STH 25 to CSAH 10; thence north on CSAH 10 to the Carver County line.

D. In Scott County, all of the cities of Shakopee, Savage, Prior Lake, and Jordan, and all of the Townships of Jackson, Louisville, St. Lawrence, Sand Creek, Spring Lake, and Credit River.

E. In Dakota County, all of the cities of Burnsville, Eagan, Mendota Heights, Mendota, Sunfish Lake, Inver Grove Heights, Apple Valley, Lakeville, Rosemount, Farmington, Hastings, Lilydale, West St. Paul, and South St. Paul, and all of the Township of Nininger.

F. That portion of Washington County lying south of the following described line: Beginning at County State Aid

Highway (CSAH) 2 on the west boundary of the county; thence east on CSAH 2 to U.S. Highway 61; thence south on U.S. Highway 61 to State Trunk Highway (STH) 97; thence east on STH 97 to the intersection of STH 97 and STH 95; thence due east to the east boundary of the State.

Northwest Goose Zone—That portion of the State encompassed by a line extending east from the North Dakota border along U.S. Highway 2 to State Trunk Highway (STH) 32, north along STH 32 to STH 92, east along STH 92 to County State Aid Highway (CSAH) 2 in Polk County, north along CSAH 2 to CSAH 27 in Pennington County, north along CSAH 27 to STH 1, east along STH 1 to CSAH 28 in Pennington County, north along CSAH 28 to CSAH 54 in Marshall County, north along CSAH 54 to CSAH 9 in Roseau County, north along CSAH 9 to STH 11, west along STH 11 to STH 310, and north along STH 310 to the Manitoba border.

Southeast Goose Zone—That part of the State within the following described boundaries: beginning at the intersection of U.S. Highway 52 and the south boundary of the Twin Cities Metro Canada Goose Zone; thence along the U.S. Highway 52 to State Trunk Highway (STH) 57; thence along STH 57 to the municipal boundary of Kasson; thence along the municipal boundary of Kasson County State Aid Highway (CSAH) 13, Dodge County; thence along CSAH 13 to STH 30; thence along STH 30 to U.S. Highway 63; thence along U.S. Highway 63 to the south boundary of the State; thence along the south and east boundaries of the State to the south boundary of the Twin Cities Metro Canada Goose Zone; thence along said boundary to the point of beginning.

Five Goose Zone—That portion of the State not included in the Twin Cities Metropolitan Canada Goose Zone, the Northwest Goose Zone, or the Southeast Goose Zone.

West Zone—That portion of the State encompassed by a line beginning at the junction of State Trunk Highway (STH) 60 and the Iowa border, then north and east along STH 60 to U.S. Highway 71, north along U.S. 71 to Interstate Highway 94, then north and west along I–94 to the North Dakota border.

Tennessee

Middle Tennessee Zone—Those portions of Houston, Humphreys, Montgomery, Perry, and Wayne Counties east of State Highway 13; and Bedford, Cannon, Cheatham, Coffee, Davidson, Dickson, Franklin, Giles, Hickman, Lawrence, Lewis, Lincoln, Macon, Marshall, Maury, Moore, Robertson, Rutherford, Smith, Sumner, Trousdale, Williamson, and Wilson Counties.

East Tennessee Zone—Anderson, Bledsoe, Bradley, Blount, Campbell, Carter, Claiborne, Clay, Cocke, Cumberland, DeKalb, Fentress, Grainger, Greene, Grundy, Hamblen, Hamilton, Hancock, Hawkins, Jackson, Jefferson, Johnson, Knox, Loudon, Marion, McMinn, Meigs, Monroe, Morgan, Overton, Pickett, Polk, Putnam, Rhea, Roane, Scott, Sequatchie, Sevier, Sullivan, Unicoi, Union, Van Buren, Warren, Washington , and White Counties.

Wisconsin

Early-Season Subzone A—That portion of the State encompassed by a line beginning at the intersection of U.S. Highway 141 and the Michigan border near Niagara, then south along U.S. 141 to State Highway 22, west and southwest along State 22 to U.S. 45, south along U.S. 45 to State 22, west and south along State 22 to State 110, south along State 110 to U.S. 10, south along U.S. 10 to State 49, south along State 49 to State 23, west along State 23 to State 73, south along State 73 to State 60, west along State 60 to State 23, south along State 23 to State 11, east along State 11 to State 78, then south along State 78 to the Illinois border.

Early-Season Subzone B—The remainder of the State.

Central Flyway

Kansas

September Canada Goose Kansas City/Topeka Unit—That part of Kansas bounded by a line from the Kansas-Missouri State line west on K–68 to its junction with K–33, then north on K–33 to its junction with U.S.–56, then west on U.S.–56 to its junction with K–31, then west-northwest on K–31 to its junction with K–99, then north on K–99 to its junction with U.S.–24, then east on U.S.–24 to its junction with K–63, then north on K–63 to its junction with K–16, then east on K–16 to its junction with K–116, then east on K–116 to its junction with U.S.–59, then northeast on U.S.–59 to its junction with the Kansas-Missouri line, then south on the Kansas-Missouri line to its junction with K–68.

September Canada Goose Wichita Unit—That part of Kansas bounded by a line from I–135 west on U.S. 50 to its junction with Burmac Road, then south on Burmac Road to its junction with 279 Street West (Sedgwick/Harvey County line), then south on 279 Street West to its junction with K–96, then east on K–96 to its junction with K–296, then south on K–296 to its junction with 247 Street West, then south on 247 Street West to its junction with U.S.–54, then west on U.S.–54 to its junction with 263 Street West, then south on 263 Street West to its junction with K–49, then south on K–49 to its junction with 90 Avenue North, then east on 90 Avenue North to its junction with KS–55, then east on KS–55 to its junction with KS–15, then east on KS–15 to its junction with U.S.–77, then north on U.S.–77 to its junction with Ohio Street, then north on Ohio to its junction with KS–254, then east on KS–254 to its junction with KS–196, then northwest on KS–196 to its junction with I–135, then north on I–135 to its junction with U.S.–50.

South Dakota

September Canada Goose North Unit—Clark, Codington, Day, Deuel, Grant, Hamlin, Marshall, and Roberts County.

September Canada Goose South Unit—Beadle, Brookings, Hanson, Kingsbury, Lake, Lincoln, McCook, Miner, Minnehaha, Moody, Sanborn, and Turner Counties,

Pacific Flyway

Idaho

East Zone—Bonneville, Caribou, Fremont, and Teton Counties.

Oregon

Northwest Zone—Benton, Clackamas, Clatsop, Columbia, Lane, Lincoln, Linn, Marion, Polk, Multnomah, Tillamook, Washington, and Yamhill Counties.

Southwest Zone—Coos, Curry, Douglas, Jackson, Josephine, and Klamath Counties.

East Zone—Baker, Gilliam, Malheur, Morrow, Sherman, Umatilla, Union, and Wasco Counties.

Washington

Area 1—Skagit, Island, and Snohomish Counties.

Area 2A (SW Quota Zone)—Clark County, except portions south of the Washougal River; Cowlitz, and Wahkiakum counties.

Area 2B (SW Quota Zone)—Pacific and Grays Harbor counties.

Area 3—All areas west of the Pacific Crest Trail and west of the Big White Salmon River that are not included in Areas 1, 2A, and 2B.

Area 4—Adams, Benton, Chelan, Douglas, Franklin, Grant, Kittitas, Lincoln, Okanogan, Spokane, and Walla Walla Counties.

Area 5—All areas east of the Pacific Crest Trail and east of the Big White Salmon River that are not included in Area 4.

Wyoming

Bear River Area—That portion of Lincoln County described in State regulations.

Salt River Area—That portion of Lincoln County described in State regulations.

Farson-Eden Area—Those portions of Sweetwater and Sublette Counties described in State regulations.

Teton Area—Those portions of Teton County described in State regulations.

Bridger Valley Area—The area described as the Bridger Valley Hunt Unit in State regulations.

Little Snake River—That portion of the Little Snake River drainage in Carbon County.

Ducks

Atlantic Flyway

New York

Lake Champlain Zone: The U.S. portion of Lake Champlain and that area east and north of a line extending along NY 9B from the Canadian border to U.S. 9, south along U.S. 9 to NY 22 south of Keesville; south along NY 22 to the west shore of South Bay, along and around the shoreline of South Bay to NY 22 on the east shore of South Bay; southeast along NY 22 to U.S. 4, northeast along U.S. 4 to the Vermont border.

Long Island Zone: That area consisting of Nassau County, Suffolk County, that area of Westchester County southeast of I–95, and their tidal waters.

Western Zone: That area west of a line extending from Lake Ontario east along the north shore of the Salmon River to I–81, and south along I–81 to the Pennsylvania border.

Northeastern Zone: That area north of a line extending from Lake Ontario east along the north shore of the Salmon River to I–81, south along I–81 to NY 49, east along NY 49 to NY 365, east along NY 365 to NY 28, east along NY 28 to NY 29, east along NY 29 to I–87, north along I–87 to U.S. 9 (at Exit 20), north along U.S. 9 to NY 149, east along NY 149 to U.S. 4, north along U.S. 4 to the Vermont border, exclusive of the Lake Champlain Zone.

Southeastern Zone: The remaining portion of New York.

Mississippi Flyway

Indiana

North Zone: That portion of the State north of a line extending east from the Illinois border along State Road 18 to U.S. Highway 31, north along U.S. 31 to U.S. 24, east along U.S. 24 to Huntington, then southeast along U.S. 224 to the Ohio border.

Ohio River Zone: That portion of the State south of a line extending east from the Illinois border along Interstate Highway 64 to New Albany, east along State Road 62 to State 56, east along State 56 to Vevay, east and north on State 156 along the Ohio River to North Landing, north along State 56 to U.S. Highway 50, then northeast along U.S. 50 to the Ohio border.

South Zone: That portion of the State between the North and Ohio River Zone boundaries.

Iowa

North Zone: That portion of the State north of a line extending east from the Nebraska border along State Highway 175 to State 37, southeast along State 37 to U.S. Highway 59, south along U.S. 59 to Interstate Highway 80, then east along I–80 to the Illinois border.

South Zone: The remainder of Iowa.

Central Flyway

Colorado

Special Teal Season Area: Lake and Chaffee Counties and that portion of the State east of Interstate Highway 25.

Kansas

High Plains Zone: That portion of the State west of U.S. 283.

Low Plains Early Zone: That portion of the State east of the High Plains Zone and west of a line extending south from the Nebraska border along KS 28 to U.S. 36, east along U.S. 36 to KS 199, south along KS 199 to Republic County Road 563, south along Republic County Road 563 to KS 148, east along KS 148 to Republic County Road 138, south along Republic County Road 138 to Cloud County Road 765, south along Cloud County Road 765 to KS 9, west along KS 9 to U.S. 24, west along U.S. 24 to U.S. 281, north along U.S. 281 to U.S. 36, west along U.S. 36 to U.S. 183, south along U.S. 183 to U.S. 24, west along U.S. 24 to KS 18, southeast along KS 18 to U.S. 183, south along U.S. 183 to KS 4, east along KS 4 to I–135, south along I–135 to KS 61, southwest along KS 61 to KS 96, northwest on KS 96 to U.S. 56, west along U.S. 56 to U.S. 281, south along U.S. 281 to U.S. 54, then west along U.S. 54 to U.S. 283.

Low Plains Late Zone: The remainder of Kansas.

Nebraska

Special Teal Season Area: That portion of the State south of a line beginning at the Wyoming State line; east along U.S. 26 to Nebraska Highway L62A; east to U.S. 385; south to U.S. 26; east to NE 92; east along NE 92 to NE 61; south along NE 61 to U.S. 30; east along U.S. 30 to the Iowa border.

New Mexico (Central Flyway Portion)

North Zone: That portion of the State north of I–40 and U.S. 54.

South Zone: The remainder of New Mexico.

Pacific Flyway

California

Northeastern Zone: In that portion of California lying east and north of a line beginning at the intersection of the Klamath River with the California-Oregon line; south and west along the Klamath River to the mouth of Shovel Creek; along Shovel Creek to its intersection with Forest Service Road 46N05 at Burnt Camp; west to its junction with Forest Service Road 46N10; south and east to its Junction with County Road 7K007; south and west to its junction with Forest Service Road 45N22; south and west to its junction with Highway 97 and Grass Lake Summit; south along to its junction with Interstate 5 at the town of Weed; south to its junction with Highway 89; east and south along Highway 89 to Main Street Greenville; north and east to its junction with North Valley Road; south to its junction of Diamond Mountain Road; north and east to its junction with North Arm Road; south and west to the junction of North Valley Road; south to the junction with Arlington Road (A22); west to the junction of Highway 89; south and west to the junction of Highway 70; east on Highway 70 to Highway 395; south and east on Highway 395 to the point of intersection with the California-Nevada state line; north along the California-Nevada state line to the junction of the California-Nevada-Oregon state lines west along the California-Oregon state line to the point of origin.

Colorado River Zone: Those portions of San Bernardino, Riverside, and Imperial Counties east of a line extending from the Nevada border south along U.S. 95 to Vidal Junction; south on a road known as ''Aqueduct Road'' in San Bernardino County through the town of Rice to the San Bernardino-Riverside County line; south on a road known in Riverside County as the ''Desert Center to Rice Road'' to the town of Desert Center; east 31 miles on I–10 to the Wiley Well Road; south on this road to Wiley Well; southeast along the Army-Milpitas Road to the Blythe, Brawley, Davis Lake intersections; south on the Blythe-Brawley paved road to the Ogilby and Tumco Mine Road; south on this road to U.S. 80; east 7 miles on U.S. 80 to the Andrade-Algodones Road; south on this paved road to the Mexican border at Algodones, Mexico.

Southern Zone: That portion of southern California (but excluding the Colorado River Zone) south and east of a line extending from the Pacific Ocean east along the Santa Maria River to CA 166 near the City of Santa Maria; east on CA 166 to CA 99; south on CA 99 to the crest of the Tehachapi Mountains at Tejon Pass; east and north along the crest of the Tehachapi Mountains to CA 178 at Walker Pass; east on CA 178 to U.S. 395 at the town of Inyokern; south on U.S. 395 to CA 58; east on CA 58 to I–15; east on I–15 to CA 127; north on CA 127 to the Nevada border.

Southern San Joaquin Valley Temporary Zone: All of Kings and Tulare Counties and that portion of Kern County north of the Southern Zone.

Balance-of-the-State Zone: The remainder of California not included in the Northeastern, Southern, and Colorado River Zones, and the Southern San Joaquin Valley Temporary Zone.

Canada Geese

Michigan

North Zone: The Upper Peninsula.

Middle Zone: That portion of the Lower Peninsula north of a line beginning at the Wisconsin border in Lake Michigan due west of the mouth of Stony Creek in Oceana County; then due east to, and easterly and southerly along the south shore of, Stony Creek to Scenic Drive, easterly and southerly along Scenic Drive to Stony Lake Road, easterly along Stony Lake and Garfield Roads to Michigan Highway 20, east along Michigan 20 to U.S. Highway 10 Business Route (BR) in the city of Midland, east along U.S. 10 BR to U.S. 10, east along U.S. 10 to Interstate Highway 75/U.S. Highway 23, north along I–75/U.S. 23 to the U.S. 23 exit at Standish, east along U.S. 23 to Shore Road in Arenac County, east along Shore Road to the tip of Point Lookout, then on a line directly east 10 miles into Saginaw Bay, and from that point on a line directly northeast to the Canada border.

South Zone: The remainder of Michigan.

Sandhill Cranes

Central Flyway

Colorado

The Central Flyway portion of the State except the San Luis Valley (Alamosa, Conejos, Costilla, Hinsdale, Mineral, Rio Grande, and Saguache Counties east of the Continental Divide) and North Park (Jackson County).

Kansas

That portion of the State west of a line beginning at the Oklahoma border, north on I–35 to Wichita, north on I–135 to Salina, and north on U.S. 81 to the Nebraska border.

New Mexico

Regular-Season Open Area—Chaves, Curry, De Baca, Eddy, Lea, Quay, and Roosevelt Counties.

Middle Rio Grande Valley Area—The Central Flyway portion of New Mexico in Socorro and Valencia Counties.

Estancia Valley Area—Those portions of Santa Fe, Torrance and Bernallilo Counties within an area bounded on the west by New Mexico Highway 55 beginning at Mountainair north to NM 337, north to NM 14, north to I–25; on the north by I–25 east to U.S. 285; on the east by U.S. 285 south to U.S. 60; and on the south by U.S. 60 from U.S. 285 west to NM 55 in Mountainair.

Southwest Zone—Sierra, Luna, Dona Ana Counties, and those portions of Grant and Hidalgo Counties south of I–10.

Oklahoma

That portion of the State west of I–35.

Texas

Area 1—That portion of the State west of a line beginning at the International Bridge at Laredo, north along I–35 to the Oklahoma border.

Area 2—That portion of the State east and south of a line from the International Bridge at Laredo northerly along I–35 to U.S. 290; southeasterly along U.S. 290 to I–45; south and east on I–45 to State Highway 87, south and east on TX 87 to the channel in the Gulf of Mexico between Galveston and Point Bolivar; EXCEPT: That portion of the State lying within the area bounded by the Corpus Christi Bay Causeway on U.S. 181 at Portland; north and west on U.S. 181 to U.S. 77 at Sinton; north and east along U.S. 77 to U.S. 87 at Victoria; east and south along U.S. 87 to Texas Highway 35; north and east on TX 35 to the west end of the Lavaca Bay Bridge; then south and east along the west shoreline of Lavaca Bay and Matagorda Island to the Gulf of Mexico; then south and west along the shoreline of the Gulf of Mexico to the Corpus Christi Bay Causeway.

North Dakota

Area 1—That portion of the State west of U.S. 281.

Area 2—That portion of the State east of U.S. 281.

South Dakota

That portion of the State west of U.S. 281.

Montana

The Central Flyway portion of the State except that area south of I–90 and west of the Bighorn River.

Wyoming

Regular-Season Open Area—Campbell, Converse, Crook, Goshen, Laramie, Niobrara, Platte, and Weston Counties.

Riverton-Boysen Unit—Portions of Fremont County.

Park and Big Horn County Unit—Portions of Park and Big Horn Counties.

Pacific Flyway

Arizona

Special-Season Area—Game Management Units 30A, 30B, 31, and 32.

Montana

Special-Season Area—See State regulations.

Utah

Special-Season Area—Rich, Cache, and Unitah Counties and that portion of Box Elder County beginning on the Utah-Idaho State line at the Box Elder-Cache County line; west on the State line to the Pocatello Valley County Road; south on the Pocatello Valley County Road to I–15; southeast on I–15 to SR–83; south on SR–83 to Lamp Junction; west and south on the Promontory Point County Road to the tip of Promontory Point; south from Promontory Point to the Box Elder-Weber County line; east on the Box Elder-Weber County line to the Box Elder-Cache County line; north on the Box Elder-Cache County line to the Utah-Idaho State line.

Wyoming

Bear River Area—That portion of Lincoln County described in State regulations.

Salt River Area—That portion of Lincoln County described in State regulations.

Farson-Eden Area—Those portions of Sweetwater and Sublette Counties described in State regulations.

All Migratory Game Birds in Alaska

North Zone—State Game Management Units 11–13 and 17–26.

Gulf Coast Zone—State Game Management Units 5–7, 9, 14–16, and 10 (Unimak Island only).

Southeast Zone—State Game Management Units 1–4.

Pribilof and Aleutian Islands Zone—State Game Management Unit 10 (except Unimak Island).

Kodiak Zone—State Game Management Unit 8.

All Migratory Game Birds in the Virgin Islands

Ruth Cay Closure Area—island of Ruth Cay, just south of St. Croix.

All Migratory Game Birds in Puerto Rico

Municipality of Culebra Closure Area—All of the municipality of Culebra.

Desecheo Island Closure Area—All of Desecheo Island.

Mona Island Closure Area—All of Mona Island.

El Verde Closure Area—Those areas of the municipalities of Rio Grande and Loiza delineated as follows: (1) All lands between Routes 956 on the west and 186 on the east, from Route 3 on the north to the juncture of Routes 956 and 186 (Km 13.2) in the south; (2) all lands between Routes 186 and 966 from the juncture of 186 and 966 on the north, to the Caribbean National Forest Boundary on the south; (3) all lands lying west of Route 186 for 1 kilometer from the juncture of Routes 186 and 956 south to Km 6 on Route 186; (4) all lands within Km 14 and Km 6 on the west and the Caribbean National Forest Boundary on the east; and (5) all lands within the Caribbean National Forest Boundary whether private or public.

Cidra Municipality and adjacent areas—All of Cidra Municipality and portions of Aguas Buenas, Caguas, Cayey, and Comerio Municipalities as encompassed within the following boundary: beginning on Highway 172 as it leaves the municipality of Cidra on the west edge, north to Highway 156, east on Highway 156 to Highway 1, south on Highway 1 to Highway 765, south on Highway 765 to Highway 763, south on Highway 763 to the Rio Guavate, west along Rio Guavate to Highway 1, southwest on Highway 1 to Highway 14, west on Highway 14 to Highway 729, north on Highway 729 to Cidra Municipality boundary to the point of the beginning.

[FR Doc. 03–21760 Filed 8–26–03; 8:45 am]

BILLING CODE 4310–55–P

Reader Aids

Federal Register

Vol. 68, No. 166

Wednesday, August 27, 2003

CUSTOMER SERVICE AND INFORMATION

Federal Register/Code of Federal Regulations	
General Information, indexes and other finding aids	**202–741–6000**
Laws	**741–6000**
Presidential Documents	
Executive orders and proclamations	**741–6000**
The United States Government Manual	**741–6000**
Other Services	
Electronic and on-line services (voice)	**741–6020**
Privacy Act Compilation	**741–6064**
Public Laws Update Service (numbers, dates, etc.)	**741–6043**
TTY for the deaf-and-hard-of-hearing	**741–6086**

ELECTRONIC RESEARCH

World Wide Web

Full text of the daily Federal Register, CFR and other publications is located at: **http://www.access.gpo.gov/nara**

Federal Register information and research tools, including Public Inspection List, indexes, and links to GPO Access are located at: **http://www.archives.gov/federal__register/**

E-mail

FEDREGTOC-L (Federal Register Table of Contents LISTSERV) is an open e-mail service that provides subscribers with a digital form of the Federal Register Table of Contents. The digital form of the Federal Register Table of Contents includes HTML and PDF links to the full text of each document.

To join or leave, go to **http://listserv.access.gpo.gov** and select *Online mailing list archives, FEDREGTOC-L, Join or leave the list (or change settings);* then follow the instructions.

PENS (Public Law Electronic Notification Service) is an e-mail service that notifies subscribers of recently enacted laws.

To subscribe, go to **http://listserv.gsa.gov/archives/publaws-l.html** and select *Join or leave the list* (or change settings); then follow the instructions.

FEDREGTOC-L and **PENS** are mailing lists only. We cannot respond to specific inquiries.

Reference questions. Send questions and comments about the Federal Register system to: **info@fedreg.nara.gov**

The Federal Register staff cannot interpret specific documents or regulations.

FEDERAL REGISTER PAGES AND DATE, AUGUST

45157–45740 1
45741–46072 4
46073–46432 5
46433–46918 6
46919–47200 7
47201–47440 8
47441–47834 11
47835–48248 12
48249–48528 13
48529–48766 14
48767–49322 15
49323–49682 18
49683–50038 19
50039–50456 20
50457–50680 21
50681–50962 22
50963–51148 25
51149–51428 26
51429–51672 27

CFR PARTS AFFECTED DURING AUGUST

At the end of each month, the Office of the Federal Register publishes separately a List of CFR Sections Affected (LSA), which lists parts and sections affected by documents published since the revision date of each title.

3 CFR

Executive Orders:
12722 (See: Notice of July 31, 2003) 45739
12724 (See: Notice of July 31, 2003) 45739
13290 (See: Notice of July 31, 2003) 45739
13313.....46073
13314.....48249
13222 (See: Notice of August 7, 2003) 47833

Administrative Orders:
Notices:
Notice of July 31, 2003) 45739
Notice of August 7, 2003 47833
Presidential Determinations:
No. 1998–7 of December 5, 1997 (See No. 03–31 of August 8, 2003) 49325
No. 2003–28 47441
No. 2003–29 47443
No. 2003–30 of August 7, 2003 49323
No. 2003–31 of August 8, 2003 49325
No. 2003–32 of August 18, 2003 50963

5 CFR

Proposed Rules:
334.....50726
532.....47877, 50727

7 CFR

15.....51334
15b.....51334
51.....46433, 50681
250.....46434
300.....50039
319.....50039
340.....46434
916.....48251, 48767
917.....48251, 48767
958.....48529
993.....46436
996.....46919
1000.....48770
1030.....50686
1032.....51640
1427.....49327
1481.....49329
1580.....50048
1778.....46077
1794.....45157

Proposed Rules:
Ch. I 48574
Ch. IX.....48574
Ch. X.....48574
Ch. XI.....48574
52.....46504
91.....48322
96.....48322
331.....45787
762.....49723
783.....47499
983.....45990
991.....48575
1124 .....46505, 49375, 51202
1032.....51640
1131.....46505, 51202
1135.....49375
1205.....51202
1778.....46119
1910.....50479
1941.....50479
1965.....50479
2200.....48814
2201.....48814
4279.....46509

8 CFR

204.....46925
212.....46926
214.....46926
231.....46926
233.....46926

9 CFR

77.....47201
82.....45741
92.....50053
94.....47835
206.....47802
430.....50687

10 CFR

4.....51334
72.....49683
140.....46929
600.....50646
1015.....48531
1018.....48531
1021.....51429
1022.....51429
1040.....51334

Proposed Rules:
30.....45172
40.....51516
72.....49726
170.....46439
171.....46439
1015.....48575
1018.....48575

11 CFR

104.....47386
107.....47386
110.....47386
111.....50688
9001.....47386

9003 47386
9004 47386
9008 47386
9031 47386
9032 47386
9033 47386
9034 47386
9035 47386
9036 47386
9038 47386

Proposed Rules:

100 50481
102 50488
106 50481
110 50488
114 50481
9004 50481
9034 50481

12 CFR

19 48256
24 48771
226 50965
263 48256
303 50457
308 48256
333 50457
347 50457
348 50457
359 50457
513 48256
701 46439

Proposed Rules:

3 45900
7 46119
34 46119
208 45900
225 45900
325 45900
567 45900
614 47502
615 47502

13 CFR

112 51334
117 51334

14 CFR

15 48543
25 ....46428, 47202, 47445, 49332, 50054, 51436
39 ....46441, 46443, 46444, 47202, 47204, 47207, 47208, 47211, 47213, 47216, 47218, 47447, 47842, 48274, 48544, 48546, 48783, 49334, 49336, 49337, 49340, 49342, 49344, 49686, 49688, 50055, 50057, 50058, 50061, 50064, 50461, 50462, 50689, 50693, 51149, 51150, 51439
71 ....47447, 47448, 47449, 47637, 47844, 47846, 48994, 49345, 49346, 49348, 49349, 49350, 49546, 49690, 49691, 50068, 50222, 50464, 50465, 50466, 50468
91 50054
97 ....48276, 48277
119 47798
121 ....50054, 50069
125 ....50054, 50069
135 ....50054, 50069
1250 51334
1251 51334
1252 51334
1260 50468

Proposed Rules:

21 46283
25 51203
39 ....45176, 45177, 46514, 47267, 47513, 48326, 48576, 48833, 48835, 49390, 50491, 50729, 50731, 51518, 51521, 51523
61 46283
65 46283
71 ....47515, 47516, 47518, 49727, 50081, 50082, 50083, 50084, 51205
73 ....48579, 50838
77 46283
91 ....47269, 50085
107 46283
109 46283
121 ....46283, 47269, 50085
135 ....46283, 47269, 50085
145 46283
154 46283
1260 ....48837, 48838

15 CFR

8 51334
8b 51334
20 51334
732 50470
740 50470
744 50470
750 50470
752 50470
754 50470
758 50470
770 50470
772 50470
902 49683
911 45160

Proposed Rules:

303 45177

16 CFR

228 50984
305 47449

17 CFR

4 47221
18 48549
30 46446
200 50954
202 50954
240 46446

Proposed Rules:

1 46516
240 48724

18 CFR

2 51070
4 51070
5 51070
9 51070
16 51070
35 49846
375 51070
381 50696
385 51070
1302 51334
1304 46930
1307 51334
1309 51334

Proposed Rules:

2 46452
35 49974
284 48133
388 46456

19 CFR

4 48279
103 47453
111 47455
122 50697
148 50698
191 50700

Proposed Rules:

103 48327
141 50733

20 CFR

206 51152
218 45315
225 45315
404 51153
416 51153

Proposed Rules:

404 ....45180, 47877, 50985
416 45180

21 CFR

172 ....46364, 46403, 50069
310 51167
510 49703
520 51445
522 ....48784, 49350, 49703
558 ....47237, 51170
886 49351

Proposed Rules:

310 48133
334 48133
356 50991
510 47272
558 47272

22 CFR

41 ....46948, 47460, 49351
42 49353
120 51171
141 51334
142 51334
143 51334
209 51334
217 51334
218 51334

23 CFR

1225 50703

24 CFR

905 45730

Proposed Rules:

960 45734
3282 47881

25 CFR

170 48549

Proposed Rules:

Ch. 1 45787

26 CFR

1 ....45745, 45772, 46081, 50710, 51171, 51394, 51446
300 48785
301 46081
602 ....46081, 51171, 51394, 51446

Proposed Rules:

1 ....46516, 46983, 48331, 50087, 50734
14a 50734
301 49729

27 CFR

Proposed Rules:

9 48839

28 CFR

42 51334
549 47847

Proposed Rules

16 47519
522 46138

29 CFR

31 51334
32 51334
697 46949
4022 48787
4044 48787

Proposed Rules

Ch. X 46983
1926 48843

30 CFR

925 50944
926 46460
938 ....48789, 51447

Proposed Rules

57 ....48668, 51206
72 47886
206 50087
210 50087
925 50950
943 48844

31 CFR

50 48280
591 45777
592 45777

Proposed Rules:

210 50672

32 CFR

21 47150
22 47150
32 47150
34 47150
37 47150

Proposed Rules

179 50900
199 ....46526, 49732

33 CFR

100 ....46087, 47237, 48553
117 ....45784, 47462, 47850, 47851, 51179
165 ....45164, 45165, 47237, 47239, 47241, 47243, 47245, 47464, 47465, 47852, 47854, 48282, 48284, 48555, 48798, 49356, 49359, 49704, 50711, 51449, 51451, 51453

Proposed Rules:

100 48846
110 45190
117 ....46139, 47520, 47522, 49393
165 ....46984, 47277
326 50108

36 CFR

4 46477
7 50073

Proposed Rules:

1 51207

3 51207
7 ....47524, 51207, 51526
219 49395
242 49734
294 49395

37 CFR

1 48286
2 48286

Proposed Rules:

263 50493

38 CFR

3 50966
4 51454
18 51334

39 CFR

111 49362
224 47527
261 47527
262 47527
263 47527
264 47527
265 47527
266 47527
267 47527
268 47527
3001 48293

Proposed Rules:

111 ....45192, 49396

40 CFR

7 51334
52 ....45897, 46089, 46099, 46101, 46479, 46484, 46487, 47466, 47468, 47473, 47477, 47482, 48557, 48803, 51181, 51184, 51185, 51187, 51459
60 46489
62 ....48558, 49363, 49706
63 ....46102, 51190
70 46489
71 45167
81 ....47964, 51459
86 48561
180 ....46491, 47246, 48299, 48302, 48312, 51465, 51471, 51479
261 46951
272 ....51484, 51488
300 ....48314, 50714

Proposed Rules:

Ch. 1 46435
19 45788
27 45788
51 46436
52 ....46141, 46437, 47279, 47530, 45731, 47532, 47533, 51219, 51220, 51544
62 ....48581, 49406
63 ....46142, 51220
70 46438
81 ....48848, 51544
141 ....47640, 49548
142 ....47640, 49548
143 49548
194 47887
271 45192
272 51545
300 ....48331, 49406, 50735, 51221
432 48472

41 CFR

101-6 51334
101-8 51334
101-45 51420
102-38 51420

Proposed Rules:

51-3 45195
51-4 45195

42 CFR

102 51492
409 ....46036, 50840
411 46036
412 ....45346, 45674, 47637
413 ....45346, 46036, 50717
417 50840
422 50840
424 48805
440 46036
483 46036
488 46036
493 50722
489 46036

Proposed Rules:

405 50428
410 ....47966, 49030
414 ....49030, 50735
419 47966

43 CFR

17 51334

44 CFR

7 51334
65 49365
67 49371

45 CFR

605 51334
611 51334
617 51334
1110 51334
1151 51334
1156 51334
1170 51334
1203 51334
1232 51334

46 CFR

1 51499
188 45785
189 45785

Proposed Rules:

4 50992

47 CFR

1 ....48446, 51499
2 46957
13 46957
15 ....50725, 50972
25 ....47856, 49372, 51499
54 ....47253, 49707, 50077
61 50077
63 50973
64 ....50973, 50978
69 46500
73 ....45786, 46286, 46502, 47255, 47256, 48764, 49372, 50725, 51194
80 46957

Proposed Rules:

2 ....49409, 50739
25 ....49409, 51546
64 50993
73 ....46359, 47282, 47283, 47284, 47285, 49410, 50740, 50998

48 CFR

217 50474
219 50476
237 50476
252 50477

Proposed Rules:

242 50495
1601 48851
1602 48851
1604 48851
1615 48851
1631 48851
1632 48851
1644 48851
1652 48851
1806 45168
1807 45168
1811 45168
1814 45168
1815 45168
1817 45168
1819 45168
1825 45168
1827 45168
1844 45168
1852 45168
1872 45168
2901 48996
2902 48996
2903 48996
2904 48996
2905 48996
2906 48996
2907 48996
2908 48996
2909 48996
2910 48996
2911 48996
2912 48996
2913 48996
2914 48996
2915 48996
2916 48996
2917 48996
2918 48996
2919 48996
2920 48996
2921 48996
2922 48996
2923 48996
2924 48996
2925 48996
2926 48996
2927 48996
2928 48996
2929 48996
2930 48996
2931 48996
2932 48996
2933 48996
2934 48996
2935 48996
2936 48996
2937 48996
2938 48996
2939 48996
2940 48996
2941 48996
2942 48996
2943 48996
2944 48996
2945 48996
2946 48996
2947 48996
2948 48996
2949 48996
2950 48996
2951 48996
2952 48996
2953 48996
9904 50111

49 CFR

21 51334
27 51334
71 ....49373, 49712
171 48562
172 48562
173 48562
177 48562
178 48562
179 48562
180 48562
191 46109
192 46109
195 46109
229 49713
390 47860
398 47860
571 ....47485, 48571, 50077
1002 50980
1500 49718
1502 49718
1503 49718
1510 49718
1511 49718
1540 49718
1542 49718
1544 49718
1546 49718
1548 49718
1550 49718

Proposed Rules:

71 47533
380 ....47890, 48863
385 49737
390 49737
391 47890
397 49737
571 ....46539, 46546, 49756
585 46546
586 46546
589 46546
590 46546
596 46546
1152 48332
1507 49410

50 CFR

17 ....46684, 46870
20 ....50496, 51658
21 50496
223 51508
229 51195
300 ....47256, 48572
622 47498
635 45169
648 ....47264, 49693
660 ....46112, 49721
679 ....45170, 45766, 46116, 46117, 46502, 47265, 47266, 47875, 49374, 50079, 50509, 51146, 51515

Proposed Rules:

13 51222
15 46559
17 ....46143, 46989, 48581
20 ....47424, 50016
21 ....51222, 51231
32 48583
100 49734
600 45196

622.....48592
635.....45196, 47404
648.....49758, 50998
660.....49415, 51548
679 .....49416, 50120, 51147
697.....51232

REMINDERS

The items in this list were editorially compiled as an aid to Federal Register users. Inclusion or exclusion from this list has no legal significance.

RULES GOING INTO EFFECT AUGUST 27, 2003

AGRICULTURE DEPARTMENT

Animal and Plant Health Inspection Service

Exportation and importation of animals and animal products:

Classical swine fever; disease status change—

Mexico; published 8-12-03

ENVIRONMENTAL PROTECTION AGENCY

Pesticides; tolerances in food, animal feeds, and raw agricultural commodities:

Diflubenzuron; published 8-27-03

Flumioxazin; published 8-27-03

Thiamethoxam; published 8-27-03

FEDERAL COMMUNICATIONS COMMISSION

Common carrier services:

Satellite communications—

Satellite licensing procedures; published 8-27-03

HEALTH AND HUMAN SERVICES DEPARTMENT

Food and Drug Administration

Animal drugs, feeds, and related products:

Moxidectin and praziquantel gel; published 8-27-03

Moxidectin gel; published 8-27-03

Medical devices:

Obstetrical and gynecological devices—

Breast lesion documentation system; published 7-28-03

HEALTH AND HUMAN SERVICES DEPARTMENT

Health Resources and Services Administration

Smallpox Compensation Program:

Smallpox vaccine injury table; published 8-27-03

HOMELAND SECURITY DEPARTMENT

Coast Guard

Ports and waterways safety, and uninspected vessels:

Towing vessels; fire suppression systems and voyage planning; published 4-29-03

INTERIOR DEPARTMENT

Fish and Wildlife Service

Migratory bird hunting:

Seasons, limits, and shooting hours; establishment, etc.; published 8-27-03

INTERIOR DEPARTMENT

Surface Mining Reclamation and Enforcement Office

Permanent program and abandoned mine land reclamation plan submissions:

Pennsylvania; published 8-27-03

TRANSPORTATION DEPARTMENT

Federal Aviation Administration

Airworthiness directives:

Learjet; published 8-12-03

COMMENTS DUE NEXT WEEK

AGRICULTURE DEPARTMENT

Agricultural Marketing Service

Pistachios grown in—

California; comments due by 9-3-03; published 8-4-03 [FR 03-19123]

Processed fruits, vegetables, and processed products; inspection and certification; comments due by 9-5-03; published 8-6-03 [FR 03-20008]

AGRICULTURE DEPARTMENT

Forest Service

National Forest System land and resource management planning:

Special areas—

Roadless area conservation; comments due by 9-2-03; published 8-18-03 [FR 03-21208]

Roadless area conservation; Tongass National Forest, AK; comments due by 9-2-03; published 8-18-03 [FR 03-21209]

AGRICULTURE DEPARTMENT

Rural Utilities Service

Grants:

Emergency and imminent community water assistance; comments due by 9-4-03; published 8-5-03 [FR 03-19697]

BLIND OR SEVERELY DISABLED, COMMITTEE FOR PURCHASE FROM PEOPLE WHO ARE

Committee for Purchase From People Who Are Blind or Severely Disabled

Nonprofit agencies; annual certifications; due dates; comments due by 9-2-03; published 8-1-03 [FR 03-19630]

COMMERCE DEPARTMENT

International Trade Administration

Watches, watch movements, and jewelry:

Duty-exemption allocations—

Virgin Islands, Guam, American Samoa, and Northern Mariana Islands; comments due by 9-2-03; published 8-1-03 [FR 03-19272]

COMMERCE DEPARTMENT

National Oceanic and Atmospheric Administration

Fishery conservation and management:

West Coast States and Western Pacific fisheries—

Queets River to Cape Falcon, OR; recreational fishery; comments due by 9-3-03; published 8-19-03 [FR 03-21045]

COMMODITY FUTURES TRADING COMMISSION

Commodity Exchange Act:

Customer funds investment; comments due by 9-5-03; published 8-6-03 [FR 03-19949]

DEFENSE DEPARTMENT

Federal Acquisition Regulation (FAR):

Cost accounting standards administration; comments due by 9-2-03; published 7-3-03 [FR 03-16868]

Gains and losses, maintenance and repair costs, and material costs; comments due by 9-5-03; published 7-7-03 [FR 03-16982]

ENVIRONMENTAL PROTECTION AGENCY

Air pollution control:

State operating permits programs—

Kansas; comments due by 9-5-03; published 8-6-03 [FR 03-20037]

Kansas; comments due by 9-5-03; published 8-6-03 [FR 03-20019]

Air programs:

Outer Continental Shelf regulations—

California; consistency update; comments due by 9-2-03; published 7-31-03 [FR 03-19283]

Air quality implementation plans:

Preparation, adoption, and submittal—

8-hour ozone national ambient air quality standard; implementation; comments due by 9-5-03; published 8-6-03 [FR 03-20030]

Air quality implementation plans; approval and promulgation; various States:

Maryland; comments due by 9-5-03; published 8-6-03 [FR 03-19922]

Pennsylvania; comments due by 9-4-03; published 8-5-03 [FR 03-19740]

Pesticides; tolerances in food, animal feeds, and raw agricultural commodities:

Bacillus thuringiensis Cry34Ab1 and Cry35Ab1 proteins; comments due by 9-5-03; published 7-7-03 [FR 03-17105]

Famoxadone; comments due by 9-2-03; published 7-2-03 [FR 03-16736]

Fludioxonil; comments due by 9-2-03; published 7-3-03 [FR 03-16931]

Nomenclature changes; technical amendments; comments due by 9-2-03; published 7-1-03 [FR 03-16614]

Solid wastes:

Project XL (eXcellence and Leadership) program; site-specific projects—

Georgia-Pacific Corp. pulp and paper mill, Big Island, VA; comments due by 9-4-03; published 8-5-03 [FR 03-19919]

Georgia-Pacific Corp. pulp and paper mill, Big Island, VA; comments due by 9-4-03; published 8-5-03 [FR 03-19920]

FEDERAL COMMUNICATIONS COMMISSION

Radio broadcasting:

Definition of radio markets for areas not located in an arbitron survey area; comments due by 9-4-03; published 8-5-03 [FR 03-19091]

Radio frequency devices:
Unlicensed devices operating in 5 GHz band; comments due by 9-3-03; published 7-25-03 [FR 03-18971]
Radio stations; table of assignments:
Alabama; comments due by 9-5-03; published 7-24-03 [FR 03-18831]
Arizona; comments due by 9-5-03; published 7-24-03 [FR 03-18809]
Georgia; comments due by 9-5-03; published 7-24-03 [FR 03-18830]
West Virginia; comments due by 9-5-03; published 7-24-03 [FR 03-18807]

FEDERAL HOUSING FINANCE BOARD
Federal home loan bank system:
Acquired member assets, core mission activities, and investments and advances; amendments; comments due by 9-2-03; published 7-1-03 [FR 03-16477]
Privacy Act and Freedom of Information Act; implementation; comments due by 9-2-03; published 7-3-03 [FR 03-16560]

GENERAL SERVICES ADMINISTRATION
Federal Acquisition Regulation (FAR):
Cost accounting standards administration; comments due by 9-2-03; published 7-3-03 [FR 03-16868]
Gains and losses, maintenance and repair costs, and material costs; comments due by 9-5-03; published 7-7-03 [FR 03-16982]

HEALTH AND HUMAN SERVICES DEPARTMENT
Food and Drug Administration
Food additives:
Olestra; comments due by 9-4-03; published 8-5-03 [FR 03-19508]
Human drugs:
Internal analgesic, antipyretic, and antirheumatic products (OTC); tentative final monograph and related labeling; comments due by 9-2-03; published 6-4-03 [FR 03-13914]
Skin protectant drug products (OTC); final monograph; comments due by 9-2-03; published 6-4-03 [FR 03-13751]

HOMELAND SECURITY DEPARTMENT
Coast Guard
Anchorage regulations:
Maryland; comments due by 9-2-03; published 7-2-03 [FR 03-16639]
Drawbridge operations:
New York; comments due by 9-5-03; published 6-25-03 [FR 03-16000]
Outer Continental Shelf activities:
Gulf of Mexico; safety zone; comments due by 9-5-03; published 7-7-03 [FR 03-16963]
Ports and waterways safety:
Bayou Casotte, Pascagoula, MS; security zone; comments due by 9-5-03; published 7-7-03 [FR 03-16972]
Charleston Harbor, Cooper River, SC; security zones; comments due by 9-5-03; published 7-7-03 [FR 03-16969]

INTERIOR DEPARTMENT
Fish and Wildlife Service
Endangered and threatened species:
Beluga sturgeon; comments due by 9-2-03; published 7-2-03 [FR 03-16724]
Critical habitat designations—
Cumberland elktoe, etc.; mussels in Tennessee and Cumberland River Basins; comments due by 9-2-03; published 6-3-03 [FR 03-12944]
Migratory bird hunting:
Seasons, limits, and shooting hours; establishment, etc.; comments due by 9-2-03; published 8-19-03 [FR 03-20940]

INTERIOR DEPARTMENT
Watches, watch movements, and jewelry:
Duty-exemption allocations—
Virgin Islands, Guam, American Samoa, and Northern Mariana Islands; comments due by 9-2-03; published 8-1-03 [FR 03-19272]

LABOR DEPARTMENT
Occupational Safety and Health Administration
Safety and health standards, etc.:
Respiratory protection—
Assigned protection factors; comments due by 9-4-03; published 6-6-03 [FR 03-13749]
Controlled negative pressure REDON fit testing protocol; comments due by 9-4-03; published 6-6-03 [FR 03-13748]

NATIONAL AERONAUTICS AND SPACE ADMINISTRATION
Federal Acquisition Regulation (FAR):
Cost accounting standards administration; comments due by 9-2-03; published 7-3-03 [FR 03-16868]
Gains and losses, maintenance and repair costs, and material costs; comments due by 9-5-03; published 7-7-03 [FR 03-16982]

NATIONAL CREDIT UNION ADMINISTRATION
Credit unions:
Organization and operations—
Loan participation regulations; definition clarifications; comments due by 9-2-03; published 7-3-03 [FR 03-16793]
Share insurance and appendix—
Share insurance regulations; clarification and simplification; comments due by 9-2-03; published 7-3-03 [FR 03-16794]

NUCLEAR REGULATORY COMMISSION
Rulemaking petitions:
Union of Concerned Scientists and Mothers for Peace; comments due by 9-2-03; published 6-16-03 [FR 03-15123]

POSTAL SERVICE
Domestic Mail Manual:
Bulk Bound Printed Matter; mailer requirements of entry; destination delivery unit rate; comments due by 9-2-03; published 8-1-03 [FR 03-19553]

SOCIAL SECURITY ADMINISTRATION
Social security benefits and supplemental security income:
Federal old-age, survivors, and disability insurance, and aged, blind, and disabled—
Disability and blindness determinations; medical-vocational rules; education and previous work experience categories clarification; comments due by 9-5-03; published 7-7-03 [FR 03-16859]

STATE DEPARTMENT
Visas; nonimmigrant documentation:
Personal appearance; comments due by 9-5-03; published 7-7-03 [FR 03-17044]

TRANSPORTATION DEPARTMENT
Federal Aviation Administration
Air carrier certification and operations:
Hazardous materials training requirements; air carriers and commercial operators; comments due by 9-5-03; published 7-7-03 [FR 03-17107]
Airworthiness directives:
Boeing; comments due by 9-2-03; published 7-17-03 [FR 03-18082]
Hartzell Propeller, Inc., et al.; comments due by 9-2-03; published 7-3-03 [FR 03-16689]
MD Helicopters, Inc.; comments due by 9-2-03; published 7-2-03 [FR 03-16687]
Class E airspace; comments due by 9-2-03; published 7-29-03 [FR 03-19165]

TRANSPORTATION DEPARTMENT
Federal Highway Administration
Engineering and traffic operations:
Work zone safety and mobility; comments due by 9-4-03; published 5-7-03 [FR 03-11020]

TRANSPORTATION DEPARTMENT
Federal Motor Carrier Safety Administration
Motor carrier safety standards:
New drivers; safety performance history; comments due by 9-2-03; published 7-17-03 [FR 03-18137]

TREASURY DEPARTMENT
Internal Revenue Service
Income taxes:
Low-income housing tax credit; section 42 carryover and stacking rule amendments; comments due by 9-5-03; published 7-7-03 [FR 03-16941]

TREASURY DEPARTMENT
Alcohol and Tobacco Tax and Trade Bureau
Alcoholic beverages:

Dried fruit and honey wines production; comments due by 9-2-03; published 7-2-03 [FR 03-16564]

LIST OF PUBLIC LAWS

This is a continuing list of public bills from the current session of Congress which have become Federal laws. It may be used in conjunction with ''P L U S'' (Public Laws Update Service) on 202–741–6043. This list is also available online at *http://www.nara.gov/fedreg/plawcurr.html*.

The text of laws is not published in the **Federal Register** but may be ordered in ''slip law'' (individual pamphlet) form from the Superintendent of Documents, U.S. Government Printing Office, Washington, DC 20402 (phone, 202–512–1808). The text will also be made available on the Internet from GPO Access at *http://www.access.gpo.gov/nara/nara005.html*. Some laws may not yet be available.

H.R. 2195/P.L. 108–72

Smithsonian Facilities Authorization Act (Aug. 15, 2003; 117 Stat. 888)

H.R. 2465/P.L. 108–73

Family Farmer Bankruptcy Relief Act of 2003 (Aug. 15, 2003; 117 Stat. 891)

H.R. 2854/P.L. 108–74

To amend title XXI of the Social Security Act to extend the availability of allotments for fiscal years 1998 through 2001 under the State Children's Health Insurance Program, and for other purposes. (Aug. 15, 2003; 117 Stat. 892)

S. 1015/P.L. 108–75

Mosquito Abatement for Safety and Health Act (Aug. 15, 2003; 117 Stat. 898)

H.R. 1412/P.L. 108–76

Higher Education Relief Opportunities for Students Act of 2003 (Aug. 18, 2003; 117 Stat. 904)

Last List August 19, 2003

Public Laws Electronic Notification Service (PENS)

PENS is a free electronic mail notification service of newly enacted public laws. To subscribe, go to *http://listserv.gsa.gov/archives/publaws-l.html*

Note: This service is strictly for E-mail notification of new laws. The text of laws is not available through this service. **PENS** cannot respond to specific inquiries sent to this address.