AUTHENTICATED
U.S. GOVERNMENT
INFORMATION
GPO

Federal Register

5–15–03 Thursday
Vol. 68 No. 94 May 15, 2003

Pages 26201–26456

The **FEDERAL REGISTER** is published daily, Monday through Friday, except official holidays, by the Office of the Federal Register, National Archives and Records Administration, Washington, DC 20408, under the Federal Register Act (44 U.S.C. Ch. 15) and the regulations of the Administrative Committee of the Federal Register (1 CFR Ch. I). The Superintendent of Documents, U.S. Government Printing Office, Washington, DC 20402 is the exclusive distributor of the official edition.

The **Federal Register** provides a uniform system for making available to the public regulations and legal notices issued by Federal agencies. These include Presidential proclamations and Executive Orders, Federal agency documents having general applicability and legal effect, documents required to be published by act of Congress, and other Federal agency documents of public interest.

Documents are on file for public inspection in the Office of the Federal Register the day before they are published, unless the issuing agency requests earlier filing. For a list of documents currently on file for public inspection, see http://www.archives.gov/federal_register/.

The seal of the National Archives and Records Administration authenticates the Federal Register as the official serial publication established under the Federal Register Act. Under 44 U.S.C. 1507, the contents of the **Federal Register** shall be judicially noticed.

The **Federal Register** is published in paper and on 24x microfiche. It is also available online at no charge as one of the databases on GPO Access, a service of the U.S. Government Printing Office.

The online edition of the **Federal Register** is issued under the authority of the Administrative Committee of the Federal Register as the official legal equivalent of the paper and microfiche editions (44 U.S.C. 4101 and 1 CFR 5.10). It is updated by 6 a.m. each day the **Federal Register** is published and it includes both text and graphics from Volume 59, Number 1 (January 2, 1994) forward.

GPO Access users can choose to retrieve online **Federal Register** documents as TEXT (ASCII text, graphics omitted), PDF (Adobe Portable Document Format, including full text and all graphics), or SUMMARY (abbreviated text) files. Users should carefully check retrieved material to ensure that documents were properly downloaded.

On the World Wide Web, connect to the **Federal Register** at http://www.access.gpo.gov/nara. Those without World Wide Web access can also connect with a local WAIS client, by Telnet to swais.access.gpo.gov, or by dialing (202) 512–1661 with a computer and modem. When using Telnet or modem, type swais, then log in as guest with no password.

For more information about GPO Access, contact the GPO Access User Support Team by E-mail at gpoaccess@gpo.gov; by fax at (202) 512–1262; or call (202) 512–1530 or 1–888–293–6498 (toll free) between 7 a.m. and 5 p.m. Eastern time, Monday–Friday, except Federal holidays.

The annual subscription price for the **Federal Register** paper edition is $699, or $764 for a combined **Federal Register, Federal Register** Index and List of CFR Sections Affected (LSA) subscription; the microfiche edition of the **Federal Register** including the **Federal Register** Index and LSA is $264. Six month subscriptions are available for one-half the annual rate. The charge for individual copies in paper form is $10.00 for each issue, or $10.00 for each group of pages as actually bound; or $2.00 for each issue in microfiche form. All prices include regular domestic postage and handling. International customers please add 25% for foreign handling. Remit check or money order, made payable to the Superintendent of Documents, or charge to your GPO Deposit Account, VISA, MasterCard or Discover. Mail to: New Orders, Superintendent of Documents, P.O. Box 371954, Pittsburgh, PA 15250–7954.

There are no restrictions on the republication of material appearing in the **Federal Register.**

How To Cite This Publication: Use the volume number and the page number. Example: 68 FR 12345.

SUBSCRIPTIONS AND COPIES

PUBLIC

Subscriptions:

Paper or fiche	**202–512–1800**
Assistance with public subscriptions	**202–512–1806**

General online information **202–512–1530; 1–888–293–6498**

Single copies/back copies:

Paper or fiche	**202–512–1800**
Assistance with public single copies	**1–866–512–1800 (Toll-Free)**

FEDERAL AGENCIES

Subscriptions:

Paper or fiche	**202–741–6005**
Assistance with Federal agency subscriptions	**202–741–6005**

What's NEW!

Federal Register Table of Contents via e-mail

Subscribe to FEDREGTOC, to receive the **Federal Register** Table of Contents in your e-mail every day.

If you get the HTML version, you can click directly to any document in the issue.

To subscribe, go to **http://listserv.access.gpo.gov** and select:

Online mailing list archives
FEDREGTOC-L
Join or leave the list

Then follow the instructions.

Printed on recycled paper.

Contents

Federal Register

Vol. 68, No. 94

Thursday, May 15, 2003

Administration on Aging
See Aging Administration

Aging Administration
NOTICES
Grants and cooperative agreements; availability, etc.:
National Consumer Protection Technical Resource Center, 26298

Agriculture Department
See Animal and Plant Health Inspection Service
See Forest Service
See Natural Resources Conservation Service
See Rural Utilities Service
NOTICES
Committees; establishment, renewal, termination, etc.:
Dietary Guidelines Advisory Committee, 26280

Animal and Plant Health Inspection Service
NOTICES
Agency information collection activities; proposals, submissions, and approvals, 26281

Army Department
See Engineers Corps
NOTICES
Meetings:
Western Hemisphere Institute for Security Cooperation Board of Visitors, 26292–26293

Centers for Disease Control and Prevention
NOTICES
Grants and cooperative agreements; availability, etc.:
Occupational safety and health—
Education programs, 26298–26306

Centers for Medicare & Medicaid Services
See Inspector General Office, Health and Human Services Department

Civil Rights Commission
NOTICES
Meetings; State advisory committees:
North Carolina, 26287–26288
South Carolina, 26288

Coast Guard
RULES
Drawbridge operations:
Texas, 26208
Ports and waterways safety:
Anchorage, Knik Arm, AK; security zone, 26208–26210
PROPOSED RULES
Ports and waterways safety:
Chesapeake Bay, MD; Cove Point Liquefied Natural Gas Terminal; safety and security zone, 26247–26248

Commerce Department
See International Trade Administration
See National Oceanic and Atmospheric Administration

Defense Department
See Army Department
See Engineers Corps
PROPOSED RULES
Acquisition regulations:
Purchases from required source; competition requirements, 26265–26269

Drug Enforcement Administration
PROPOSED RULES
Schedules of controlled substances:
Fenfluramine; removal; withdrawn, 26247
NOTICES
Applications, hearings, determinations, etc.:
Banerjee, Sankar N., M.D., 26355
Bristol-Myers Squibb Pharma Co., 26355
Cerilliant Corp., 26355–26356
Chattem Chemicals, Inc., 26356
Kooker, Robert A., M.D., 26357

Education Department
NOTICES
Grants and cooperative agreements; availability, etc.:
Elementary and secondary education—
Advanced Placement Incentive Program, 26425–26429
Arts in Education Model Development and Dissemination Program, 26431–26456

Energy Department
See National Nuclear Security Administration
NOTICES
Electricity export and import authorizations, permits, etc.:
OGE Energy Resources, Inc., 26294
Grants and cooperative agreements; availability, etc.:
Controlled Hydrogen Fleet and Infrastructure Demonstration and Validation Project, 26294–26295
Natural gas exportation and importation:
H.Q. Energy Services (U.S.) Inc. et al., 26295–26296

Engineers Corps
NOTICES
Environmental statements; availability, etc.:
Harrison County, MS; Royal D'Iberville Hotel and Casino development, 26293
Environmental statements; notice of intent:
Hotspot Miami Beach, Dade County, FL; Section 227 National Shoreline Erosion Control Demonstration Project, 26293–26294

Environmental Protection Agency
RULES
Air quality implementation plans; approval and promulgation; various States; air quality planning purposes; designation of areas:
Colorado, 26212–26220
Air quality implementation plans; approval and promulgation; various States:
Utah, 26210–26212
PROPOSED RULES
Air pollutants, hazardous; national emission standards:
Control technology determinations; general provisions; amendments, 26249–26265

Air quality implementation plans; approval and promulgation; various States; air quality planning purposes; designation of areas:
Colorado, 26248–26249
Air quality implementation plans; approval and promulgation; various States:
Utah, 26248

Federal Aviation Administration
RULES
Airworthiness directives:
Rolls-Royce plc, 26201–26202
VOR Federal airways and jet routes, 26202–26204
PROPOSED RULES
Airworthiness directives:
Cessna, 26239–26242, 26244–26247
Dornier, 26242–26244
Airworthiness standards:
Special conditions—
Cessna Model 680 Sovereign airplane, 26237–26239
NOTICES
Environmental statements; availability, etc.:
Potomac Consolidated Terminal Radar Approach Control (TRACON) airspace redesign, 26373
Exemption petitions; summary and disposition, 26373–26374

Federal Communications Commission
RULES
Television broadcasting:
Noncommercial educational broadcast station applicants; comparative standards reexamination; motion for stay of low power television auction, 26220–26230
NOTICES
Agency information collection activities; proposals, submissions, and approvals, 26297

Federal Election Commission
PROPOSED RULES
Bipartisan Campaign Reform Act; implementation:
Presidential candidates and nominating conventions; public financing, 26237

Federal Motor Carrier Safety Administration
NOTICES
Motor carrier safety standards:
Controlled substances and alcohol testing regulations; exemption applications—
Aero Mayflower Transit et al., 26374–26375

Federal Reserve System
NOTICES
Banks and bank holding companies:
Change in bank control, 26297
Formations, acquisitions, and mergers; correction, 26297–26298

Food and Drug Administration
RULES
Animal drugs, feeds, and related products:
Carprofen, 26205
Fenbendazole suspension, 26204–26205
Penicillin G potassium in drinking water, 26204
Xylazine injection, 26205–26206
NOTICES
Agency information collection activities; proposals, submissions, and approvals, 26306–26308
Reports and guidance documents; availability, etc.:
Medical devices—
Surgical masks; premarket notification submissions, 26308–26309

Forest Service
NOTICES
Environmental statements; notice of intent:
Chugach National Forest, AK, 26281–26283
Idaho Panhandle National Forest, ID, 26283–26284
Meetings:
Black Hills National Forest Advisory Board, 26284–26285
Resource Advisory Committees—
North Central Idaho, 26285
Ravalli County, 26285
Tuolumne County, 26285

Health and Human Services Department
See Aging Administration
See Centers for Disease Control and Prevention
See Food and Drug Administration
See Health Resources and Services Administration
See Inspector General Office, Health and Human Services Department
See National Institutes of Health
See Public Health Service
NOTICES
Committees; establishment, renewal, termination, etc.:
Dietary Guidelines Advisory Committee, 26280

Health Resources and Services Administration
NOTICES
Agency information collection activities; proposals, submissions, and approvals, 26309–26310
Grants and cooperative agreements; availability, etc.:
Bioterrorism Training and Curriculum Development Program; correction, 26310

Homeland Security Department
See Coast Guard
See Transportation Security Administration

Housing and Urban Development Department
NOTICES
Agency information collection activities; proposals, submissions, and approvals, 26327–26329

Indian Affairs Bureau
NOTICES
Net Common Fund; partial settlement; payment and distribution:
Ramah Navajo Chapter et al., NM, 26329–26352

Inspector General Office, Health and Human Services Department
NOTICES
Program exclusions; list, 26310–26313

Interior Department
See Indian Affairs Bureau
See Land Management Bureau

Internal Revenue Service
NOTICES
Agency information collection activities; proposals, submissions, and approvals, 26379–26381

International Trade Administration
NOTICES
Antidumping:
Stainless steel wire rods from—
India, 26288–26291
Antidumping and countervailing duties:
Administrative review requests, 26288

Justice Department
See Drug Enforcement Administration
NOTICES
Pollution control; consent judgments:
Corbett, Charles E., Jr., 26352
Ed Krewatch Partnership et al., 26352–26354
Wisconsin Electric Power Co., 26354

Land Management Bureau
NOTICES
Coal leases, exploration licenses, etc.:
Montana, 26352

National Archives and Records Administration
NOTICES
Agency records schedules; availability, 26357–26359

National Commission on Terrorist Attacks Upon the United States
NOTICES
Hearings, 26359

National Council on Disability
NOTICES
Meetings:
Cultural Diversity Advisory Committee, 26359

National Highway Traffic Safety Administration
PROPOSED RULES
Motor vehicle safety standards:
Brake hoses, 26383–26424
Transmission shift lever sequence, starter interlock, and transmission braking effect, 26269–26279
NOTICES
Agency information collection activities; proposals, submissions, and approvals, 26375–26376

National Institutes of Health
NOTICES
Inventions, Government-owned; availability for licensing, 26313–26314
Meetings:
National Cancer Institute, 26314–26316
National Center for Complementary and Alternative Medicine, 26318
National Center for Research Resources, 26316–26319
National Heart, Lung, and Blood Institute, 26319–26320
National Institute of Allergy and Infectious Diseases, 26320–26322, 26324
National Institute of Biomedical Imaging and Bioengineering, 26324
National Institute of Dental and Craniofacial Research, 26324–26325
National Institute of Diabetes and Digestive and Kidney Diseases, 26322–26323
National Institute of Nursing Research, 26324
National Institute on Aging, 26323
National Institute on Deafness and Other Communication Disorders, 26320–26321
National Library of Medicine, 26325
Warren Grant Magnuson Clinical Center Board of Governors, 26325

National Nuclear Security Administration
NOTICES
Environmental statements; availability, etc.:
Los Alamos National Laboratory, NM; Chemical and Metallurgy Research Building Replacement Project, 26296–26297

National Oceanic and Atmospheric Administration
RULES
Fishery conservation and management:
Alaska; fisheries of Exclusive Economic Zone—
Pacific halibut; subsistence fishing; correction, 26230
Caribbean, Gulf, and South Atlantic fisheries—
Gulf of Mexico and South Atlantic coastal migratory pelagic resources and Gulf of Mexico reef fish, 26230–26236
NOTICES
Meetings:
Regional fisheries management, 26291–26292

Natural Resources Conservation Service
NOTICES
Field office technical guides; changes:
Indiana, 26285–26286

Nuclear Regulatory Commission
NOTICES
Meetings:
Yucca Mountain, NV; potential high-level waste repository—
Activities overview, 26360–26361
Applications, hearings, determinations, etc.:
Envirocare of Utah, Inc., 26359–26360

Pension Benefit Guaranty Corporation
RULES
Single-employer plans:
Allocation of assets—
Interest assumptions for valuing and paying benefits, 26206–26208
NOTICES
Multiemployer plans:
Interest rates and assumptions, 26361

Public Health Service
NOTICES
National Toxicology Program:
Center for Evaluation of Risks to Human Reproduction—
Ethylene glycol and propylene glycol; developmental and reproductive toxicity; expert panel reports, 26325–26326

Rural Utilities Service
NOTICES
Agency information collection activities; proposals, submissions, and approvals, 26286–26287

Securities and Exchange Commission
NOTICES
Meetings; Sunshine Act, 26361
Self-regulatory organizations; proposed rule changes:
Boston Stock Exchange, Inc., 26361–26363
Chicago Board Options Exchange, Inc., 26363–26364
Chicago Mercantile Exchange, 26364–26366
International Securities Exchange, Inc., 26366–26369

OneChicago, LLC, 26369–26371

State Department
NOTICES
Passport travel restrictions, U.S.:
Iraq, 26371

Surface Transportation Board
NOTICES
Railroad operation, acquisition, construction, etc.:
Burlington Northern & Santa Fe Railway Co., 26376–26377
Riverview Trenton Railroad Co., 26377–26378
Union Pacific Railroad Co., 26378

Tennessee Valley Authority
NOTICES
Environmental statements; availability, etc.:
Scott and Campbell Counties, TN; Koppers Coal Reserve management plan, 26371–26373

Transportation Department
See Federal Aviation Administration
See Federal Motor Carrier Safety Administration
See National Highway Traffic Safety Administration
See Surface Transportation Board
See Transportation Statistics Bureau
NOTICES
Aviation proceedings:
Hearings, etc.—
USA Jet Airlines, Inc., 26373

Transportation Security Administration
NOTICES
Agency information collection activities; proposals, submissions, and approvals, 26326–26327

Transportation Statistics Bureau
NOTICES
Agency information collection activities; proposals, submissions, and approvals, 26378–26379

Treasury Department
See Internal Revenue Service

United States Institute of Peace
NOTICES
Grants and cooperative agreements; availability, etc.:
Solicited grants—
Senior Fellowship competition, 26381

Separate Parts In This Issue

Part II
Transportation Department, National Highway Traffic Safety Administration, 26383–26424

Part III
Education Department, 26425–26429

Part IV
Education Department, 26431–26456

Reader Aids
Consult the Reader Aids section at the end of this issue for phone numbers, online resources, finding aids, reminders, and notice of recently enacted public laws.

To subscribe to the Federal Register Table of Contents LISTSERV electronic mailing list, go to http://listserv.access.gpo.gov and select Online mailing list archives, FEDREGTOC-L, Join or leave the list (or change settings); then follow the instructions.

CFR PARTS AFFECTED IN THIS ISSUE

A cumulative list of the parts affected this month can be found in the Reader Aids section at the end of this issue.

11 CFR

Proposed Rules:

104 26237
107 26237
110 26237
9003 26237
9004 26237
9008 26237
9032 26237
9033 26237
9034 26237
9035 26237
9036 26237
9038 26237

14 CFR

39 26201
71 26202

Proposed Rules:

25 26237
39 (3 documents) 26239, 26242, 26244

21 CFR

520 (2 documents) 26204
522 (2 documents) 26205

Proposed Rules:

1308 26247

29 CFR

4022 26206
4044 26206

33 CFR

117 26208
165 26208

Proposed Rules:

165 26247

40 CFR

52 (2 documents) 26210, 26212
81 26212

Proposed Rules:

52 (2 documents) 26248
63 26249
81 26248

47 CFR

73 26220
74 26220

48 CFR

Proposed Rules:

208 26265
219 26265
252 26265

49 CFR

Proposed Rules:

571 (2 documents) 26269, 26384

50 CFR

300 26230
600 26230
622 26230
679 26230

Rules and Regulations

Federal Register
Vol. 68, No. 94
Thursday, May 15, 2003

This section of the FEDERAL REGISTER contains regulatory documents having general applicability and legal effect, most of which are keyed to and codified in the Code of Federal Regulations, which is published under 50 titles pursuant to 44 U.S.C. 1510.

The Code of Federal Regulations is sold by the Superintendent of Documents. Prices of new books are listed in the first FEDERAL REGISTER issue of each week.

DEPARTMENT OF TRANSPORTATION

Federal Aviation Administration

14 CFR Part 39

[Docket No. 2003–NE–15–AD; Amendment 39–13146; AD 2003–10–02]

RIN 2120–AA64

Airworthiness Directives; Rolls-Royce plc RB211 Series Turbofan Engines

AGENCY: Federal Aviation Administration (FAA), DOT.

ACTION: Final rule; request for comments.

SUMMARY: The FAA is adopting a new airworthiness directive (AD) for Rolls-Royce plc (RR) RB211–524C2–19 and RB211–524C2–B–19 series turbofan engines. This AD requires replacing the existing low pressure (LP) compressor location bearing assembly, intermediate pressure (IP) compressor location bearing, IP compressor bearing support housing, IP compressor rear stub shaft, LP compressor location bearing support, oil transfer connector assembly, hydraulic oil seal housing, and hydraulic oil seal with improved design parts. This AD is prompted by statistical analysis by the manufacturer of in-service premature bearing failures. The actions specified in this AD are intended to prevent LP compressor failure and uncontained disc failures, resulting in damage to the airplane.

DATES: Effective June 19, 2003.

We must receive any comments on this AD by July 14, 2003.

ADDRESSES: Use one of the following addresses to submit comments on this AD:

- By mail: The Federal Aviation Administration (FAA), New England Region, Office of the Regional Counsel, Attention: Rules Docket No. 2003–NE–15–AD, 12 New England Executive Park, Burlington, MA 01803–5299.
- By fax: (781) 238–7055.
- By e-mail: *9-ane-adcomment@faa.gov*

You may get the service information referenced in this AD from Rolls-Royce plc, PO Box 31, Derby, England, DE248BJ; telephone: 011–44–1332–242424; fax: 011–44–1332–245–418.

You may examine the AD docket, by appointment, at the FAA, New England Region, Office of the Regional Counsel, 12 New England Executive Park, Burlington, MA.

FOR FURTHER INFORMATION CONTACT: Ian Dargin, Aerospace Engineer, Engine Certification Office, FAA, Engine And Propeller Directorate, 12 New England Executive Park; Burlington, MA 01803–5299, telephone (781) 238–7178; fax (781) 238–7199.

SUPPLEMENTARY INFORMATION: The manufacturer has performed statistical analysis of in-service bearing failures in RR RB211–524C2–19 and RB211–524C2–B–19 series turbofan engines. The analysis indicates a more rapid deterioration of the LP compressor location bearing assembly and IP compressor location bearing than the latest bearing standard used on other model RB211 turbofan engines. This AD requires replacing the existing LP compressor location bearing assembly, IP compressor location bearing, IP compressor bearing support housing, IP compressor rear stub shaft, LP compressor location bearing support, oil transfer connector assembly, hydraulic oil seal housing, and hydraulic oil seal with improved design parts. The actions specified in this AD are intended to prevent LP compressor failure and uncontained disc failures, resulting in damage to the airplane.

Relevant Service Information

We have reviewed the technical contents of RR Mandatory Service Bulletin (MSB) No. RB.211–72–D021, Revision 2, dated March 5, 2001, that introduces an improved design LP compressor location bearing assembly. We have also reviewed Service Bulletin (SB) No. RB.211–72–9446, dated October 15, 1993, that introduces an improved design IP compressor location bearing, IP compressor bearing support housing, IP compressor rear stub shaft, LP compressor location bearing support, oil transfer connector assembly, hydraulic oil seal housing, and hydraulic oil seal. MSB No. RB.211–72–D021, Revision 2, dated March 5, 2001, requires that the improved design parts listed in SB RB.211–72–9446, dated October 15, 1993, be installed before or concurrently with the installation of the improved design LP compressor location bearing assembly listed in SB RB.211–72–D021. The Civil Aviation Authority (CAA), which is the airworthiness authority for the U.K., classified MSB No. RB.211–72–D021 as mandatory and issued AD 001–12–2000, dated December 5, 2000, in order to assure the airworthiness of these RR RB211–524C2–19 and RB211–524C2–B–19 series turbofan engines in the U.K.

FAA's Determination and Requirements of This AD

Although none of these affected engine models are used on any airplanes that are registered in the United States, the possibility exists that the engine models could be used on airplanes that are registered in the United States in the future. Since an unsafe condition has been identified that is likely to exist or develop on other RR RB211–524C2–19 and RB211–524C2–B–19 series turbofan engines of the same type design, this AD is being issued to prevent LP compressor failure and uncontained disc failures, resulting in damage to the airplane. This AD requires replacing the LP compressor location bearing assembly, IP compressor location bearing, IP compressor bearing support housing, IP compressor rear stub shaft, LP compressor location bearing support, oil transfer connector assembly, hydraulic oil seal housing, and hydraulic oil seal with improved design parts.

Bilateral Airworthiness Agreement

These engine models are manufactured in the U.K. and is type certificated for operation in the United States under the provisions of § 21.29 of the Federal Aviation Regulations (14 CFR 21.29) and the applicable bilateral airworthiness agreement. Pursuant to this bilateral airworthiness agreement, the CAA has kept the FAA informed of the situation described above. The FAA has examined the findings of the CAA, reviewed all available information, and determined that AD action is necessary for products of this type design that are certificated for operation in the United States.

FAA's Determination of the Effective Date

Since there are currently no domestic operators of this engine model, notice and opportunity for prior public comment are unnecessary. Therefore, a situation exists that allows the immediate adoption of this regulation.

Changes to 14 CFR Part 39—Effect on the AD

On July 10, 2002, we issued a new version of 14 CFR part 39 (67 FR 47997, July 22, 2002), which governs our AD system. This regulation now includes material that relates to special flight permits, alternative methods of compliance, and altered products. This material previously was included in each individual AD. Since this material is included in 14 CFR part 39, we will not include it in future AD actions.

Comments Invited

This AD is a final rule that involves requirements affecting flight safety and was not preceded by notice and an opportunity for public comment; however, we invite you to submit any written relevant data, views, or arguments regarding this AD. Send your comments to an address listed under **ADDRESSES.** Include ''AD Docket No. 2003–NE–15–AD'' in the subject line of your comments. If you want us to acknowledge receipt of your mailed comments, send us a self-addressed, stamped postcard with the docket number written on it; we will date-stamp your postcard and mail it back to you. We specifically invite comments on the overall regulatory, economic, environmental, and energy aspects of the rule that might suggest a need to modify it. If a person contacts us through a nonwritten communication, and that contact relates to a substantive part of this AD, we will summarize the contact and place the summary in the docket. We will consider all comments received by the closing date and may amend the AD in light of those comments.

We are reviewing the writing style we currently use in regulatory documents. We are interested in your comments on whether the style of this document is clear, and your suggestions to improve the clarity of our communications with you. You may get more information about plain language at *http://www.plainlanguage.gov.*

Regulatory Findings

We have determined that this AD will not have federalism implications under Executive Order 13132. This AD will not have a substantial direct effect on the States, on the relationship between the national Government and the States, or on the distribution of power and responsibilities among the various levels of government.

For the reasons discussed above, I certify that the regulation:

1. Is not a ''significant regulatory action'' under Executive Order 12866;

2. Is not a ''significant rule'' under the DOT Regulatory Policies and Procedures (44 FR 11034, February 26, 1979); and

3. Will not have a significant economic impact, positive or negative, on a substantial number of small entities under the criteria of the Regulatory Flexibility Act.

We prepared a summary of the costs to comply with this AD and placed it in the AD Docket. You may get a copy of this summary by sending a request to us at the address listed under **ADDRESSES.** Include ''AD Docket No. 2003–NE–15–AD'' in your request.

List of Subjects in 14 CFR Part 39

Air transportation, Aircraft, Aviation safety.

Adoption of the Amendment

■ Accordingly, under the authority delegated to me by the Administrator, the Federal Aviation Administration amends part 39 of the Federal Aviation Regulations (14 CFR part 39) as follows:

PART 39—AIRWORTHINESS DIRECTIVES

■ 1. The authority citation for part 39 continues to read as follows:

Authority: 49 U.S.C. 106(g), 40113, 44701.

§ 39.13 [Amended]

■ 2. The FAA amends § 39.13 by adding the following new airworthiness directive:

2003–10–02 Rolls-Royce plc: Amendment 39–13146. Docket No. 2003–NE–15–AD.

Effective Date

(a) This airworthiness directive (AD) becomes effective June 19, 2003.

Affected ADs

(b) None.

Applicability

(c) This AD is applicable to Rolls-Royce plc (RR) RB211–524C2–19 and RB211–524C2–B–19 series turbofan engines. These engines are installed on, but not limited to Boeing 747 airplanes.

Unsafe Condition

(d) This AD was prompted by statistical analysis by the manufacturer of in-service premature bearing failures. The actions specified in this AD are intended to prevent LP compressor failure and uncontained disc failures, resulting in damage to the airplane.

Compliance

(e) Compliance with this AD is required at next parts exposure, but not later than October 10, 2005, unless already done.

Replacement of LP Location Bearing Assembly

(f) Replace LP compressor location bearing assembly P/N UL22848 or UL29054 with an improved design LP compressor location bearing assembly. Information on the replacement of the LP compressor bearing assembly can be found in RR Mandatory Service Bulletin No. RB.211–72–D021, Revision 2, dated March 5, 2001.

Concurrent Parts Replacement

(g) Either concurrently with, or before replacing the LP compressor location bearing assembly as specified in paragraph (f) of this AD, unless already done, replace IP compressor location bearing, IP compressor bearing support housing, IP compressor rear stub shaft, LP compressor location bearing support, oil transfer connector assembly, hydraulic oil seal housing, and hydraulic oil seal, with improved design parts. Information on the replacement of these improved design parts can be found in RR Service Bulletin No. RB.211–72–9446, dated October 15, 1993.

Alternative Methods of Compliance

(h) Alternative methods of compliance must be requested in accordance with 14 CFR 39.19, and must be approved by the Manager, Engine Certification Office, FAA.

Related Information

(i) CAA airworthiness directive 001–12–2000, dated December 5, 2000, also addresses the subject of this AD.

Issued in Burlington, Massachusetts, on May 7, 2003.

Francis A. Favara,

Acting Manager, Engine and Propeller Directorate, Aircraft Certification Service.

[FR Doc. 03–11974 Filed 5–14–03; 8:45 am]

BILLING CODE 4910–13–P

DEPARTMENT OF TRANSPORTATION

Federal Aviation Administration

14 CFR Part 71

[Docket No. FAA 2002–13362; Airspace Docket No. 02–ASO–7]

RIN 2120–AA66

Revision of VOR Federal Airways and Jet Routes in the Vicinity of Savannah, GA

AGENCY: Federal Aviation Administration (FAA), DOT.

ACTION: Final rule.

SUMMARY: This action revises four jet routes and seven Very High Frequency Omnidirectional Range (VOR) Federal airways in the vicinity of Savannah, GA. The FAA is taking this action because

the Savannah Very High Frequency Omnidirectional Range/Tactical Air Navigation (VORTAC) facility has been relocated to the Savannah International Airport as a result of environmental restrictions at the previous site.

EFFECTIVE DATE: 0901 UTC, July 10, 2003.

FOR FURTHER INFORMATION CONTACT: Paul Gallant, Airspace and Rules Division, ATA–400, Office of Air Traffic Airspace Management, Federal Aviation Administration, 800 Independence Avenue, SW., Washington, DC 20591; telephone: (202) 267–8783.

SUPPLEMENTARY INFORMATION:

Background

On January 23, 2003, the FAA proposed to revise four jet routes and seven VOR Federal airways in the vicinity of Savannah, GA, due to the planned relocation of the Savannah VORTAC (68 FR 3196).

Interested parties were invited to participate in this rulemaking proceeding by submitting written comments. No comments to the proposal were received. Except for editorial changes and the correction of obsolete radial information contained in the description for V–441 between St. Petersburg, FL, and Gators, FL, this rule is the same as that proposed in the notice.

The Rule

This action amends 14 CFR part 71 by revising the legal descriptions of Jet Routes J–51, J–55, J–79, and J–103; and VOR Federal Airways V–3, V–37, V–154, V–185, V–437, V–441, and V–578, in the vicinity of Savannah, GA. This action is being taken as a result of the relocation of the Savannah, GA, VORTAC to a site at the Savannah International Airport due to environmental restrictions at the previous site. This action aligns the affected segments of the above jet routes and VOR Federal airways with the new geographical position of the Savannah VORTAC.

The FAA has determined that this regulation only involves an established body of technical regulations for which frequent and routine amendments are necessary to keep them operationally current. Therefore, this regulation: (1) Is not a ''significant regulatory action'' under Executive Order 12866; (2) is not a ''significant rule'' under Department of Transportation (DOT) Regulatory Policies and Procedures (44 FR 11034, February 26, 1979); and (3) does not warrant preparation of a Regulatory Evaluation as the anticipated impact is so minimal. Since this is a routine matter that will only affect air traffic procedures and air navigation, it is certified that this rule, when promulgated, will not have a significant economic impact on a substantial number of small entities under the criteria of the Regulatory Flexibility Act.

Jet routes and Domestic VOR Federal airways are published in paragraphs 2004 and 6010(a), respectively, of FAA Order 7400.9K, dated August 30, 2002, and effective September 16, 2002, which is incorporated by reference in 14 CFR 71.1. The jet routes and VOR Federal airways listed in this document will be published subsequently in the Order.

List of Subjects in 14 CFR Part 71

Airspace, Incorporation by reference, Navigation (air).

The Amendment

■ In consideration of the foregoing, the Federal Aviation Administration amends 14 CFR part 71 as follows:

PART 71—DESIGNATION OF CLASS A, CLASS B, CLASS C, CLASS D, AND CLASS E, AIRSPACE AREAS; AIRWAYS; ROUTES; AND REPORTING POINTS

■ 1. The authority citation for part 71 continues to read as follows:

Authority: 49 U.S.C. 106(g), 40103, 40113, 40120; E.O. 10854, 24 FR 9565, 3 CFR, 1959–1963 Comp., p. 389.

§ 71.1 [Amended]

■ 2. The incorporation by reference in 14 CFR 71.1 of FAA Order 7400.9K, Airspace Designations and Reporting Points, dated August 30, 2002, and effective September 16, 2002, is amended as follows:

Paragraph 2004—Jet Routes

* * * * *

J–51 [Revised]

From Craig, FL; INT Craig 004° and Savannah, GA, 193° radials; Savannah; Columbia, SC; INT Columbia 042° and Flat Rock, VA, 212° radials; Flat Rock; Nottingham, MD; Dupont, DE; to Yardley, NJ.

* * * * *

J–55 [Revised]

From Dolphin, FL; INT Dolphin 331° and Gators, FL, 160° radials; INT Gators 160° and Craig, FL, 192° radials; Craig; INT Craig 004° and Savannah, GA, 193° radials; Savannah; Charleston, SC; Florence, SC; INT Florence 003° and Raleigh-Durham, NC, 224° radials; Raleigh-Durham; INT Raleigh-Durham 035° and Hopewell, VA, 234° radials; Hopewell; INT Hopewell 030° and Nottingham, MD, 174° radials. From Sea Isle, NJ; INT Sea Isle 050° and Hampton, NY, 223° radials; Hampton; Providence, RI; Boston, MA; Kennebunk, ME; Presque Isle, ME; to Mont Joli, PQ, Canada, excluding the portion within Canada.

* * * * *

J–79 [Revised]

From Key West, FL; INT Key West 038° and Dolphin, FL, 244° radials; Dolphin; Palm Beach, FL; Vero Beach, FL; Ormond Beach, FL; INT Savannah, GA, 178° and Charleston, SC, 212° radials; Charleston; Tar River, NC; Franklin, VA; Salisbury, MD; INT Salisbury 018° and Kennedy, NY, 218° radials; Kennedy; INT Kennedy 080° and Nantucket, MA, 254° radials; INT Nantucket 254° and Marconi. MA, 205° radials; Marconi; INT Marconi 006° and Bangor, ME, 206° radials; Bangor.

* * * * *

J–103 [Revised]

From Ormond Beach, FL; to Savannah, GA.

* * * * *

Paragraph 6010(a)—Domestic VOR Federal Airways

* * * * *

V–3 [Revised]

From Key West, FL; INT Key West 083° and Dolphin, FL, 191° radials; Dolphin; Ft. Lauderdale, FL; Palm Beach, FL; Vero Beach, FL; Melbourne, FL; Ormond Beach, FL; Brunswick, GA; INT Brunswick 014° and Savannah, GA, 177° radials; Savannah; INT Savannah 028° and Vance, SC, 203° radials; Vance; Florence, SC; Sandhills, SC; Raleigh-Durham, NC; INT Raleigh-Durham 016° and Flat Rock, VA, 214° radials; Flat Rock; Gordonsville, VA; INT Gordonsville 331° and Martinsburg, WV, 216° radials; Martinsburg; Westminster, MD; INT Westminster 048° and Modena, PA, 258° radials; Modena; Solberg, NJ; INT Solberg 044° and Carmel, NY, 243° radials; Carmel; Hartford, CT; INT Hartford 084° and Boston, MA, 224° radials; Boston; INT Boston 014° and Pease, NH, 185° radials; Pease; INT Pease 004° and Augusta, ME, 233° radials; Augusta; Bangor, ME; INT Bangor 039° and Houlton, ME, 203° radials; Houlton; Presque Isle, ME; to PQ, Canada. The airspace within R–2916, R–2934, R–2935, and within Canada is excluded.

* * * * *

V–37 [Revised]

From Craig, FL; Brunswick, GA; INT Brunswick 014° and Savannah, GA, 177° radials; Savannah; Allendale, SC; Columbia, SC; Charlotte, NC; Pulaski, VA; Elkins, WV; Clarksburg, WV; INT Clarksburg 359° and Ellwood City, PA, 185° radials; Ellwood City; Erie, PA; INT Erie 010° and Toronto, ON, Canada 210° radials; to Toronto. The airspace within Canada is excluded.

* * * * *

V–154 [Revised]

From Rome, GA; INT Rome 166° and Macon, GA, 301° radials; Macon; Dublin, GA; INT Dublin 105° and Savannah, GA, 289° radials; to Savannah.

* * * * *

V–185 [Revised]

From Savannah, GA; INT Savannah 335° and Colliers, SC, 150° radials; Colliers;

Greenwood, SC; Sugarloaf Mountain, NC; Snowbird, TN; INT Snowbird 301° and Volunteer, TN, 069° radials; to Volunteer.

* * * * *

V–437 [Revised]

From Dolphin, FL; INT Dolphin 354° and Pahokee, FL, 157° radials; Pahokee; Melbourne, FL; INT Melbourne 322° and Ormond Beach, FL, 211° radials; Ormond Beach; INT Ormond Beach 360° and Savannah, GA, 177° radials; Savannah; INT Savannah 053° and Charleston, SC, 231° radials; Charleston; to Florence, SC. The airspace within R–2935 is excluded.

* * * * *

V–441 [Revised]

From Melbourne, FL; INT Melbourne 269° and Lakeland, FL, 081° radials; Lakeland; St. Petersburg, FL; INT St. Petersburg 011° and Ocala, FL, 208° radials; Ocala; Gators, FL; INT Gators 014° and Brunswick, GA, 223° radials; Brunswick; INT Brunswick 060° and Savannah, GA, 177° radials; to Savannah.

* * * * *

V–578 [Revised]

From Pecan, GA; Tift Meyers, GA; Alma, GA; INT Alma 072° and Savannah, GA, 196° radials; to Savannah.

* * * * *

Issued in Washington, DC, on May 9, 2003.

Reginald C. Matthews,

Manager, Airspace and Rules Division.

[FR Doc. 03–12049 Filed 5–14–03; 8:45 am]

BILLING CODE 4910–13–P

DEPARTMENT OF HEALTH AND HUMAN SERVICES

Food and Drug Administration

21 CFR Part 520

Oral Dosage Form New Animal Drugs; Penicillin G Potassium in Drinking Water

AGENCY: Food and Drug Administration, HHS.

ACTION: Final rule.

SUMMARY: The Food and Drug Administration (FDA) is amending the animal drug regulations to reflect approval of an abbreviated new animal drug application (ANADA) filed by Phoenix Scientific, Inc. The ANADA provides for the use of penicillin G in the drinking water of turkeys for the treatment of erysipelas caused by *Erysipelothrix rhusiopathiae*.

DATES: This rule is effective May 15, 2003.

FOR FURTHER INFORMATION CONTACT: Lonnie W. Luther, Center for Veterinary Medicine (HFV–104), Food and Drug Administration, 7519 Standish Pl., Rockville, MD 20855, 301–827–8549, e-mail: *lluther@cvm.fda.gov*.

SUPPLEMENTARY INFORMATION: Phoenix Scientific, Inc., 3915 South 48th Street Ter., St. Joseph, MO 64503, filed ANADA 200–347 that provides for use of Penicillin G Potassium, USP, in the drinking water of turkeys for the treatment of erysipelas caused by *Erysipelothrix rhusiopathiae*. Phoenix Scientific's Penicillin G Potassium, USP, is approved as a generic copy of Fort Dodge Animal Health's Penicillin G Potassium, USP, approved under NADA 55–060. The ANADA is approved as of January 22, 2003, and the regulations are amended in 21 CFR 520.1696b to reflect the approval. The basis of approval is discussed in the freedom of information summary.

In accordance with the freedom of information provisions of 21 CFR part 20 and 21 CFR 514.11(e)(2)(ii), a summary of safety and effectiveness data and information submitted to support approval of this application may be seen in the Dockets Management Branch (HFA–305), Food and Drug Administration, 5630 Fishers Lane, rm. 1061, Rockville, MD 20852, between 9 a.m. and 4 p.m., Monday through Friday.

The agency has determined under 21 CFR 25.33(a)(1) that this action is of a type that does not individually or cumulatively have a significant effect on the human environment. Therefore, neither an environmental assessment nor an environmental impact statement is required.

This rule does not meet the definition of ''rule'' in 5 U.S.C. 804(3)(A) because it is a rule of ''particular applicability.'' Therefore, it is not subject to the congressional review requirements in 5 U.S.C. 801–808.

List of Subjects in 21 CFR Part 520

Animal drugs.

■ Therefore, under the Federal Food, Drug, and Cosmetic Act and under authority delegated to the Commissioner of Food and Drugs and redelegated to the Center for Veterinary Medicine, 21 CFR part 520 is amended as follows:

PART 520—ORAL DOSAGE FORM NEW ANIMAL DRUGS

■ 1. The authority citation for 21 CFR part 520 continues to read as follows:

Authority: 21 U.S.C. 360b.

§ 520.1696b [Amended]

■ 2. Section 520.1696b *Penicillin G potassium in drinking* water is amended in paragraph (b) by adding ''059130'' in numerical sequence.

Dated: May 6, 2003.

Stephen F. Sundlof,

Director, Center for Veterinary Medicine.

[FR Doc. 03–12194 Filed 5–14–03; 8:45 am]

BILLING CODE 4160–01–S

DEPARTMENT OF HEALTH AND HUMAN SERVICES

Food and Drug Administration

21 CFR Part 520

Oral Dosage Form New Animal Drugs; Fenbendazole Suspension

AGENCY: Food and Drug Administration, HHS.

ACTION: Final rule.

SUMMARY: The Food and Drug Administration (FDA) is amending the animal drug regulations to reflect approval of a supplemental new animal drug application (NADA) filed by Intervet, Inc. The supplemental NADA provides for a change to over-the-counter marketing status for the oral use of fenbendazole suspension in goats for removal and control of stomach worms.

DATES: This rule is effective May 15, 2003.

FOR FURTHER INFORMATION CONTACT: Janis R. Messenheimer, Center for Veterinary Medicine (HFV–130), Food and Drug Administration, 7500 Standish Pl., Rockville, MD 20855; 301–827–7578; e-mail: *jmessenh@cvm.fda.gov*.

SUPPLEMENTARY INFORMATION: Intervet, Inc., PO Box 318, 405 State St., Millsboro, DE 19966, filed a supplement to NADA 128–620 for the oral use of SAFE-GUARD (fenbendazole) Suspension 10% in goats for removal and control of stomach worms. The supplemental NADA is approved as of February 13, 2003, and the regulations are amended in 21 CFR 520.905a to reflect the approval. The basis of approval is discussed in the freedom of information summary.

In accordance with the freedom of information provisions of 21 CFR part 20 and 21 CFR 514.11(e)(2)(ii), a summary of safety and effectiveness data and information submitted to support approval of this application may be seen in the Dockets Management Branch (HFA–305), Food and Drug Administration, 5630 Fishers Lane, rm. 1061, Rockville, MD 20852, between 9 a.m. and 4 p.m., Monday through Friday.

FDA has determined under 21 CFR 25.33(a)(1) that this action is of a type that does not individually or cumulatively have a significant effect on the human environment. Therefore,

neither an environmental assessment nor an environmental impact statement is required.

This rule does not meet the definition of ''rule'' in 5 U.S.C. 804(3)(A) because it is a rule of ''particular applicability.'' Therefore, it is not subject to the congressional review requirements in 5 U.S.C. 801–808.

List of Subjects in 21 CFR Part 520

Animal drugs.

■ Therefore, under the Federal Food, Drug, and Cosmetic Act and under authority delegated to the Commissioner of Food and Drugs and redelegated to the Center for Veterinary Medicine, 21 CFR part 520 is amended as follows:

PART 520—ORAL DOSAGE FORM NEW ANIMAL DRUGS

■ 1. The authority citation for 21 CFR part 520 continues to read as follows:

Authority: 21 U.S.C. 360b.

■ 2. Section 520.905a is amended by revising paragraph (d)(4)(ii) and in paragraph (d)(4)(iii) by removing the last sentence to read as follows:

§ 520.905a Febendazole suspension.

* * * * *

(d) * * *

(4) * * *

(ii) *Indications for use*. For the removal and control of stomach worms (adults) *Haemonchus contortus* and *Teladorsagia circumcincta*.

* * * * *

Dated: April 30, 2003.

Steven F. Sundlof,

Director, Center for Veterinary Medicine.

[FR Doc. 03–12121 Filed 5–14–03; 8:45 am]

BILLING CODE 4160–01–S

DEPARTMENT OF HEALTH AND HUMAN SERVICES

Food and Drug Administration

21 CFR Part 522

Implantation or Injectable Dosage Form New Animal Drugs; Carprofen

AGENCY: Food and Drug Administration, HHS.

ACTION: Final rule.

SUMMARY: The Food and Drug Administration (FDA) is amending the animal drug regulations to reflect approval of a new animal drug application (NADA) filed by Pfizer, Inc. The NADA provides for the veterinary prescription use of carprofen solution in dogs, by subcutaneous injection, for the relief of pain and inflammation associated with osteoarthritis.

DATES: This rule is effective May 15, 2003.

FOR FURTHER INFORMATION CONTACT: Melanie R. Berson, Center for Veterinary Medicine (HFV–110), Food and Drug Administration, 7500 Standish Pl., Rockville, MD 20855, 301–827–7540, e-mail *mberson@cvm.fda.gov*.

SUPPLEMENTARY INFORMATION: Pfizer, Inc., 235 East 42d St., New York, NY 10017–5755, filed NADA 141–199 for RIMADYL (carprofen) Injection. The NADA provides for the veterinary prescription use of carprofen solution in dogs, by subcutaneous injection, for the relief of pain and inflammation associated with osteoarthritis. The application is approved as of March 3, 2003, and the regulations in part 522 (21 CFR part 522) are amended by adding new § 522.312 to reflect the approval. The basis of approval is discussed in the freedom of information summary.

In accordance with the freedom of information provisions of 21 CFR part 20 and 514.11(e)(2)(ii), a summary of safety and effectiveness data and information submitted to support approval of this application may be seen in the Dockets Management Branch (HFA–305), Food and Drug Administration, 5630 Fishers Lane, rm. 1061, Rockville, MD 20852, between 9 a.m. and 4 p.m., Monday through Friday.

Under section 512(c)(2)(F)(ii) of the Federal Food, Drug, and Cosmetic Act (21 U.S.C. 360b(c)(2)(F)(ii)), this approval qualifies for 3 years of marketing exclusivity beginning March 3, 2003.

The agency has determined under 21 CFR 25.33(d)(1) that this action is of a type that does not individually or cumulatively have a significant effect on the human environment. Therefore, neither an environmental assessment nor an environmental impact statement is required.

This rule does not meet the definition of ''rule'' in 5 U.S.C. 804(3)(A) because it is a rule of ''particular applicability.'' Therefore, it is not subject to the congressional review requirements in 5 U.S.C. 801–808.

List of Subjects in 21 CFR Part 522

Animal drugs.

■ Therefore, under the Federal Food, Drug, and Cosmetic Act and under authority delegated to the Commissioner of Food and Drugs and redelegated to the Center for Veterinary Medicine, 21 CFR part 522 is amended as follows:

PART 522—IMPLANTATION OR INJECTABLE DOSAGE FORM NEW ANIMAL DRUGS

■ 1. The authority citation for 21 CFR part 522 continues to read as follows:

Authority: 21 U.S.C. 360b.

■ 2. Section 522.312 is added to read as follows:

§ 522.312 Carprofen.

(a) *Specifications*. Each milliliter of solution contains 50 milligrams (mg) carprofen.

(b) *Sponsor*. See No. 000069 in § 510.600(c) of this chapter.

(c) [Reserved]

(d) *Conditions of use in dogs*—(1) *Amount*. 1 mg per pound (2.2 mg per kilogram) body weight twice daily, by subcutaneous injection.

(2) *Indications for use*. For the relief of pain and inflammation associated with osteoarthritis.

(3) *Limitations*. Federal law restricts this drug to use by or on the order of a licensed veterinarian.

Dated: May 6, 2003.

Steven F. Sundlof,

Director, Center for Veterinary Medicine.

[FR Doc. 03–12041 Filed 5–14–03; 8:45 am]

BILLING CODE 4160–01–S

DEPARTMENT OF HEALTH AND HUMAN SERVICES

Food and Drug Administration

21 CFR Part 522

Implantation or Injectable Dosage Form New Animal Drugs; Xylazine

AGENCY: Food and Drug Administration, HHS.

ACTION: Final rule.

SUMMARY: The Food and Drug Administration (FDA) is amending the animal drug regulations to reflect approval of a supplemental new animal drug application (NADA) filed by Lloyd, Inc. The supplemental NADA provides for use of a 300 milligram per milliliter strength of xylazine hydrochloride solution in elk and wild deer to produce sedation, accompanied by a shorter period of analgesia. A food safety cautionary statement regarding the use of xylazine in elk and wild deer (Cervidae) is also being codified for currently approved products.

DATES: This rule is effective May 15, 2003.

FOR FURTHER INFORMATION CONTACT: Melanie R. Berson, Center for Veterinary Medicine (HFV–110), Food and Drug Administration, 7500 Standish Pl.,

Rockville, MD 20855, 301–827–7543, e-mail: *mberson@cvm.fda.gov*.

SUPPLEMENTARY INFORMATION: Lloyd, Inc., 604 West Thomas Ave., Shenandoah, IA 51601, filed a supplement to NADA 139–236 that provides for use of CERVIZINE 300 (xylazine hydrochloride) solution in elk and wild deer to produce sedation, accompanied by a shorter period of analgesia. The supplemental NADA is approved as of February 10, 2003, and the regulations are amended in § 522.2662 (21 CFR 522.2662) to reflect the approval. The basis of approval is discussed in the freedom of information summary.

Section 522.2662 is also being amended to revise a codified food safety limitation and to add a food safety cautionary statement regarding the use of xylazine in elk and wild deer (Cervidae). Both statements are currently used in labeling for both pioneer and generic xylazine products. Section 522.2662 is also revised to reflect a current format.

In accordance with the freedom of information provisions of 21 CFR part 20 and 21 CFR 514.11(e)(2)(ii), a summary of safety and effectiveness data and information submitted to support approval of this application may be seen in the Dockets Management Branch (HFA–305), Food and Drug Administration, 5630 Fishers Lane, rm. 1061, Rockville, MD 20852, between 9 a.m. and 4 p.m., Monday through Friday.

The agency has determined under 21 CFR 25.33(d)(1) that this action is of a type that does not individually or cumulatively have a significant effect on the human environment. Therefore, neither an environmental assessment nor an environmental impact statement is required.

This rule does not meet the definition of ''rule'' in 5 U.S.C. 804(3)(A) because it is a rule of ''particular applicability.'' Therefore, it is not subject to the congressional review requirements in 5 U.S.C. 801–808.

List of Subjects in 21 CFR Part 522

Animal drugs.

■ Therefore, under the Federal Food, Drug, and Cosmetic Act and under authority delegated to the Commissioner of Food and Drugs and redelegated to the Center for Veterinary Medicine, 21 CFR part 522 is amended as follows:

PART 522—IMPLANTATION OR INJECTABLE DOSAGE FORM NEW ANIMAL DRUGS

■ 1. The authority citation for 21 CFR part 522 continues to read as follows:

Authority: 21 U.S.C. 360b.

■ 2. Section 522.2662 and the section heading are revised to read as follows:

§ 522.2662 Xylazine.

(a) *Specifications*. Each milliliter (mL) of solution contains xylazine hydrochloride equivalent to:

(1) 20 milligrams (mg) xylazine.

(2) 100 mg xylazine.

(3) 300 mg xylazine.

(b) *Sponsors*. See sponsors in § 510.600(c) of this chapter for uses as in paragraph (d) of this section.

(1) No. 000010 for use of product described in paragraph (a)(2) of this section as in paragraph (d)(2) of this section.

(2) No. 000856 for use of product described in paragraph (a)(2) of this section as in paragraphs (d)(2), (d)(3)(i), (d)(3)(ii)(A), and (d)(3)(iii) of this section.

(3) Nos. 000859 and 061651 for use of product described in paragraph (a)(1) of this section as in paragraph (d)(1); and product described in paragraph (a)(2) of this section as in paragraphs (d)(2), (d)(3)(i), (d)(3)(ii)(A), and (d)(3)(iii) of this section.

(4) No. 061690 for use of product described in paragraph (a)(1) of this section as in paragraph (d)(1) of this section; product described in paragraph (a)(2) of this section as in paragraphs (d)(2), (d)(3)(i), (d)(3)(ii)(A), and (d)(3)(iii) of this section; and product described in paragraph (a)(3) of this section as in paragraphs (d)(3)(i), (d)(3)(ii)(B), and (d)(3)(iii) of this section.

(c) *Special considerations*. Federal law restricts this drug to use by or on the order of a licensed veterinarian.

(d) *Conditions of use*—(1) *Dogs and cats*—(i) *Amount*. 0.5 mg/pound (lb) intravenously or 1.0 mg/lb subcutaneously.

(ii) *Indications for use*. To produce sedation, as an analgesic, and as a preanesthetic to local or general anesthesia.

(2) *Horses*--(i) *Amount*. 0.5 mg/lb intravenously or 1.0 mg/lb intramuscularly.

(ii) *Indications for use*. To produce sedation, as an analgesic, and as a preanesthetic to local or general anesthesia.

(iii) *Limitations*. Not for use in horses intended for food.

(3) *Elk and deer*--(i) *Amount*. Administer intramuscularly, by hand syringe, or by syringe dart, in the heavy muscles of the croup or shoulder as follows:

(A) Elk (*Cervus canadensis*): 0.25 to 0.5 mg/lb.

(B) Mule deer (*Odocoileus hemionus*), sika deer (*Cervus nippon*), and white-tailed deer (*Odocoileus virginianus*): 1 to 2 mg/lb.

(C) Fallow deer (*Dama dama*): 2 to 4 mg/lb.

(ii) *Indications for use*.

(A) To produce sedation, as an analgesic, and as a preanesthetic to local anesthesia.

(B) To produce sedation, accompanied by a shorter period of analgesia. May be used to calm and facilitate handling of fractious animals for diagnostic procedures, for minor surgical procedures, for therapeutic medication for sedation and relief of pain following injury or surgery, and as a preanesthetic to local anesthetic. At the recommended dosages, can be used in conjunction with local anesthetics, such as procaine or lidocaine.

(iii) *Limitations*. Do not use in domestic food-producing animals. Do not use in Cervidae less than 15 days before or during the hunting season.

Dated: April 2, 2003.

Steven D. Vaughn,

Director, Office of New Animal Drug Evaluation, Center for Veterinary Medicine.

[FR Doc. 03–12120 Filed 5–14–03; 8:45 am]

BILLING CODE 4160–01–S

PENSION BENEFIT GUARANTY CORPORATION

29 CFR Parts 4022 and 4044

Benefits Payable in Terminated Single-Employer Plans; Allocation of Assets in Single-Employer Plans; Interest Assumptions for Valuing and Paying Benefits

AGENCY: Pension Benefit Guaranty Corporation.

ACTION: Final rule.

SUMMARY: The Pension Benefit Guaranty Corporation's regulations on Benefits Payable in Terminated Single-Employer Plans and Allocation of Assets in Single-Employer Plans prescribe interest assumptions for valuing and paying benefits under terminating single-employer plans. This final rule amends the regulations to adopt interest assumptions for plans with valuation dates in June 2003. Interest assumptions are also published on the PBGC's Web site *(http://www.pbgc.gov)*.

EFFECTIVE DATE: June 1, 2003.

FOR FURTHER INFORMATION CONTACT: Harold J. Ashner, Assistant General Counsel, Office of the General Counsel, Pension Benefit Guaranty Corporation, 1200 K Street, NW., Washington, DC 20005, 202–326–4024. (TTY/TDD users may call the Federal relay service toll-

free at 1–800–877–8339 and ask to be connected to 202–326–4024.)

SUPPLEMENTARY INFORMATION: The PBGC's regulations prescribe actuarial assumptions—including interest assumptions—for valuing and paying plan benefits of terminating single-employer plans covered by title IV of the Employee Retirement Income Security Act of 1974. The interest assumptions are intended to reflect current conditions in the financial and annuity markets.

Three sets of interest assumptions are prescribed: (1) A set for the valuation of benefits for allocation purposes under section 4044 (found in Appendix B to part 4044), (2) a set for the PBGC to use to determine whether a benefit is payable as a lump sum and to determine lump-sum amounts to be paid by the PBGC (found in Appendix B to part 4022), and (3) a set for private-sector pension practitioners to refer to if they wish to use lump-sum interest rates determined using the PBGC's historical methodology (found in Appendix C to part 4022).

Accordingly, this amendment (1) adds to Appendix B to part 4044 the interest assumptions for valuing benefits for allocation purposes in plans with valuation dates during June 2003, (2) adds to Appendix B to part 4022 the interest assumptions for the PBGC to use for its own lump-sum payments in plans with valuation dates during June 2003, and (3) adds to Appendix C to part 4022 the interest assumptions for private-sector pension practitioners to refer to if they wish to use lump-sum interest rates determined using the PBGC's historical methodology for valuation dates during June 2003.

For valuation of benefits for allocation purposes, the interest assumptions that the PBGC will use (set forth in Appendix B to part 4044) will be 4.70 percent for the first 20 years following the valuation date and 5.25 percent thereafter. These interest assumptions represent a decrease (from those in effect for May 2003) of 0.20 percent for the first 20 years following the valuation date and are otherwise unchanged.

The interest assumptions that the PBGC will use for its own lump-sum payments (set forth in Appendix B to part 4022) will be 3.50 percent for the period during which a benefit is in pay status and 4.00 percent during any years preceding the benefit's placement in pay status. These interest assumptions are unchanged from those in effect for May 2003.

For private-sector payments, the interest assumptions (set forth in Appendix C to part 4022) will be the same as those used by the PBGC for determining and paying lump sums (set forth in Appendix B to part 4022).

The PBGC has determined that notice and public comment on this amendment are impracticable and contrary to the public interest. This finding is based on the need to determine and issue new interest assumptions promptly so that the assumptions can reflect, as accurately as possible, current market conditions.

Because of the need to provide immediate guidance for the valuation and payment of benefits in plans with valuation dates during June 2003, the PBGC finds that good cause exists for making the assumptions set forth in this amendment effective less than 30 days after publication.

The PBGC has determined that this action is not a ''significant regulatory action'' under the criteria set forth in Executive Order 12866.

Because no general notice of proposed rulemaking is required for this amendment, the Regulatory Flexibility Act of 1980 does not apply. *See* 5 U.S.C. 601(2).

List of Subjects

29 CFR Part 4022

Employee benefit plans, Pension insurance, Pensions, Reporting and recordkeeping requirements.

29 CFR Part 4044

Employee benefit plans, Pension insurance, Pensions.

■ In consideration of the foregoing, 29 CFR parts 4022 and 4044 are amended as follows:

PART 4022—BENEFITS PAYABLE IN TERMINATED SINGLE-EMPLOYER PLANS

■ 1. The authority citation for part 4022 continues to read as follows:

Authority: 29 U.S.C. 1302, 1322, 1322b, 1341(c)(3)(D), and 1344.

■ 2. In appendix B to part 4022, Rate Set 116, as set forth below, is added to the table. (The introductory text of the table is omitted.)

Appendix B to Part 4022—Lump Sum Interest Rates For PBGC Payments

* * * * *

Rate set	For plans with a valuation date		Immediate annuity rate (percent)	Deferred annuities (percent)				
	On or after	Before		i_1	i_2	i_3	n_1	n_2
*	*	*	*	*	*	*	*	
116	6–1–03	7–1–03	3.50	4.00	4.00	4.00	7	8

■ 3. In appendix C to part 4022, Rate Set 116, as set forth below, is added to the table. (The introductory text of the table is omitted.)

Appendix C to Part 4022—Lump Sum Interest Rates For Private-Sector Payments

* * * * *

Rate set	For plans with a valuation date		Immediate annuity rate (percent)	Deferred annuities (percent)				
	On or after	Before		i_1	i_2	i_3	n_1	n_2
*	*	*	*	*	*	*	*	
116	6–1–03	7–1–03	3.50	4.00	4.00	4.00	7	8

PART 4044—ALLOCATION OF ASSETS IN SINGLE-EMPLOYER PLANS

■ 4. The authority citation for part 4044 continues to read as follows:

Authority: 29 U.S.C. 1301(a), 1302(b)(3), 1341, 1344, 1362.

■ 5. In appendix B to part 4044, a new entry, as set forth below, is added to the table. (The introductory text of the table is omitted.)

Appendix B to Part 4044—Interest Rates Used to Value Benefits

* * * * *

For valuation dates occuring in the month—	The values of i^t are:					
	i_t	for t=	i_t	for t=	i_t	for t=
* * * *		*		*		*
June 2003	.0470	1–20	.0525	>20	N/A	N/A

Issued in Washington, DC, on this 9th day of May 2003.

Joseph H. Grant,

Deputy Executive Director and Chief Operating Officer, Pension Benefit Guaranty Corporation.

[FR Doc. 03–12116 Filed 5–14–03; 8:45 am]

BILLING CODE 7708–01–P

DEPARTMENT OF HOMELAND SECURITY

Coast Guard

33 CFR Part 117

[CGD08–03–021]

Drawbridge Operation Regulations; Corpus Christi—Port Aransas Channel—Tule Lake, Corpus Christi, TX

AGENCY: Coast Guard, DHS.

ACTION: Notice of temporary deviation from regulations.

SUMMARY: The Commander, Eighth Coast Guard District, has issued a temporary deviation from the regulation governing the operation of the Tule Lake Vertical Lift Span Highway and Railroad Bridge across the Corpus Christi—Port Aransas Channel, mile 14.0, at Corpus Christi, Nueces County, TX. This deviation allows the bridge to remain closed to navigation on May 22, 2003. The deviation is necessary to conduct emergency repairs to the drawbridge.

DATES: This deviation is effective from 7 a.m. through 7 p.m. on May 22, 2003.

ADDRESSES: Materials referred to in this document are available for inspection or copying at the office of the Eighth Coast Guard District, Bridge Administration Branch, Hale Boggs Federal Building, room 1313, 501 Magazine Street, New Orleans, Louisiana 70130–3396 between 7 a.m. and 3 p.m., Monday through Friday, except Federal holidays. The telephone number is (504) 589–2965. The Bridge Administration Branch of the Eighth Coast Guard District maintains the public docket for this temporary deviation.

FOR FURTHER INFORMATION CONTACT: Kay Wade, Bridge Administration Branch, telephone (504) 589–2965.

SUPPLEMENTARY INFORMATION: The Port of Corpus Christi Authority has requested a temporary deviation in order to remove and replace the main drive bearings of the Tule Lake vertical lift span bridge across Corpus Christi—Port Aransas Channel, mile 14.0 at Corpus Christi, Nueces County, Texas. This maintenance is essential for the continued safe operation of the bridge. This temporary deviation will allow the bridge to remain in the closed-to-navigation position from 7 a.m. through 7 p.m. on Thursday, May 22, 2003.

The vertical lift span bridge has a vertical clearance of 9.0 feet above mean high water, elevation 1.0 feet Mean Sea Level and 11.0 feet above mean low water, elevation −1.0 Mean Sea Level in the closed-to-navigation position. Navigation at the site of the bridge consists mainly of oil tankers and tows with barges. There is no recreational pleasure craft usage at the bridge site. Due to prior experience, as well as coordination with water way users, it has been determined that this one day closure will not have a significant effect on these vessels. The bridge normally opens to pass navigation an average of 850 times per month. The bridge opens on signal as required by 33 CFR 117.5. The bridge will not be able to open for emergencies during the closure period. Alternate routes are not available.

In accordance with 33 CFR 117.35(c), this work will be performed with all due speed in order to return the bridge to normal operation as soon as possible. This deviation from the operating regulations is authorized under 33 CFR 117.35.

Dated: May 7, 2003.

Marcus Redford,

Bridge Administrator.

[FR Doc. 03–12182 Filed 5–14–03; 8:45 am]

BILLING CODE 4910–15–P

DEPARTMENT OF HOMELAND SECURITY

Coast Guard

33 CFR Part 165

[COTP Western Alaska 03–001]

RIN 1625–AA00

Security zone; Port of Anchorage, Knik Arm, AK

AGENCY: Coast Guard, DHS.

ACTION: Temporary final rule.

SUMMARY: The Coast Guard is establishing a temporary 1000-yard security zone in the navigable waters off the Port of Anchorage, Alaska. This security zone temporarily closes all navigable waters extending out from the Port of Anchorage. This action is necessary to protect the Port of Anchorage, vessels moored at the Port, and its personnel against sabotage or subversive acts.

DATES: This temporary final rule is effective from 1:01 p.m. March 19, 2003, to 12:01 p.m. June 19, 2003.

ADDRESSES: Documents indicated in this preamble as being available in the docket are part of docket (COTP Western Alaska 03–001) and are available for inspection or copying at Coast Guard Marine Safety Office Anchorage, AK between 7:30 a.m. and 4 p.m., Monday through Friday, except Federal holidays.

FOR FURTHER INFORMATION CONTACT: Lieutenant Commander Chris Woodley, USCG Marine Safety Office Anchorage, at (907) 271–6700.

SUPPLEMENTARY INFORMATION:

Regulatory Information

We did not publish a notice of proposed rulemaking (NPRM) for this regulation. Under 5 U.S.C. 553(b)(B), the Coast Guard finds that good cause exists for not publishing an NPRM, and that under 5 U.S.C. 553(d)(3), good cause exists for making this rule effective less

than 30 days after publication in the **Federal Register**. The Port of Anchorage, Alaska recently experienced a terrorist threat of damage to the port and its personnel. We are immediately establishing this temporary security zone to protect the Port, the vessels within the Port, and its personnel from sabotage or subversive acts.

Background and Purpose

In light of a recent terrorist threat to the Port of Anchorage, the Coast Guard is establishing a security zone on the navigable waters off the Port of Anchorage to safeguard the Port, the vessels within the Port, and its personnel from sabotage or subversive acts and incidents of a similar nature. This security zone prohibits movement within or entry into the specified area.

This rule establishes a temporary 1000-yard security zone in the navigable waters of Knik Arm off the Port of Anchorage, Alaska. This security zone is designed to permit the safe loading and unloading of vessels moored at the Port and to protect its personnel from possible sabotage, subversive acts or incidents of a similar nature.

Discussion of Rule

The Coast Guard is establishing a temporary 1000-yard security zone in the navigable waters of Knik Arm off the Port of Anchorage. Specifically, the zone includes the waters of Knik Arm that are within an area bounded by a line drawn from a point located at 61°15.14′ North, 149°52.78′ West, then west to a point located at 61°15.14′ North, 149°53.84′ West, then south to a point located at 61°14.17′ North, 149°54.43′ West, then east to a point located at 61°13.94′ North, 149°53.55′ West. All cargo vessels scheduled to moor at the Port of Anchorage and that have submitted the required Advance Notice of Arrival will be allowed to transit the zone. All tow vessels contracted, specifically Cook Inlet Tug and Barge, to assist the vessels into the Port of Anchorage, may transit the security zone when actually assisting a vessel. The limited size of the zone is designed to minimize the impact on other vessels transiting to facilities near the Port of Anchorage.

Regulatory Evaluation

This rule is not a ''significant regulatory action'' under section 3(f) of Executive Order 12886, Regulatory Planning and Review, and does not require an assessment of potential costs and benefits under section 6(a)(3) of that Order. The Office of Management and Budget has not reviewed it under that Order. It is not ''significant'' under the regulatory policies and procedures of the Department of Homeland Security (DHS). This finding is based on the limited size of the security zone which will have minimal, if any, impact on vessels transiting the waters of Knik Arm and to facilities near the Port of Anchorage.

Small Entities

Under the Regulatory Flexibility Act (5 U.S.C. 601–612), we have considered whether this rule would have a significant economic impact on a substantial number of small entities. The term ''small entities'' comprises small businesses, not-for-profit organizations that are independently owned and operated and are not dominant in their fields, and governmental jurisdictions with populations of less than 50,000.

The Coast Guard certifies under 5 U.S.C. 605(b) that this rule will not have a significant economic impact on a substantial number of small entities.

This rule will affect the following entities, some of which may be small entities: The owners or operators of vessels intending to transit in the vicinity of the Port of Anchorage.

This security zone will not have a significant economic impact on a substantial number of small entities for the following reasons. Marine traffic will still be able to transit through Knik Arm during the zone's activation. Additionally, vessels with cargo to load or unload at the Port of Anchorage will not be precluded from mooring at or getting underway from the Port. Tow vessels contracted to assist vessels will not be precluded from transiting the zone to assist vessels.

Collection of Information

This rule calls for no new collection of information under the Paperwork Reduction Act of 1995 (44 U.S.C. 3501–3520).

Federalism

A rule has implications for federalism under Executive Order 13132, Federalism, if it has a substantial direct effect on State or local governments and would either preempt State law or impose a substantial direct cost of compliance on them. We have analyzed this rule under that Order and have determined that it does not have implications for federalism.

Unfunded Mandates Reform Act

The Unfunded Mandates Reform Act of 1995 (2 U.S.C. 1531–1538) requires Federal agencies to assess the effects of their discretionary regulatory actions. In particular, the Act addresses actions that may result in the expenditure by a State, local, or tribal government, in the aggregate, or by the private sector of $100,000,000 or more in any one year. Though this rule will not result in such an expenditure, we do discuss the effects of this rule elsewhere in this preamble.

Taking of Private Property

This rule will not effect a taking of private property or otherwise have taking implications under Executive Order 12630, Governmental Actions and Interference with Constitutionally Protected Property Rights.

Civil Justice Reform

This rule meets applicable standards in sections 3(a) and 3(b)(2) of Executive Order 12988, Civil Justice Reform, to minimize litigation, eliminate ambiguity, and reduce burden.

Protection of Children

We have analyzed this rule under Executive Order 13045, Protection of Children from Environmental Health Risks and Safety Risks. This rule is not an economically significant rule and does not create an environmental risk to health or risk to safety that may disproportionately affect children.

Indian Tribal Governments

This rule does not have tribal implications under Executive Order 13175, Consultation and Coordination with Indian Tribal Governments, because it does not have a substantial direct effect on one or more Indian tribes, on the relationship between the Federal government and Indian tribes, or on the distribution of power and responsibilities between the Federal government and Indian tribes.

Energy Effects

We have analyzed this final rule under Executive Order 13211, Actions Concerning Regulations That Significantly Affect Energy Supply, Distribution, or Use. We have determined that it is not a ''significant energy action'' under that order because it is not a ''significant regulatory action'' under Executive Order 12866 and is not likely to have a significant adverse effect on the supply, distribution, or use of energy. It has not been designated by the Administrator of the Office of Information and Regulatory Affairs as a significant energy action. Therefore, it does not require a Statement of Energy Effects under Executive Order 13211.

Environment

We have analyzed this rule under Commandant Instruction M16475.lD,

which guides the Coast Guard in complying with the National Environmental Policy Act of 1969 (NEPA) (42 U.S.C. 4321–4370f), and have concluded that there are no factors in this case that would limit the use of a categorical exclusion under section 2.B.2 of the Instruction. Therefore, this rule is categorically excluded, under figure 2–1, paragraph (34)(g) of the Instruction, from further environmental documentation. A final ''Environmental Analysis Check List'' and a final ''Categorical Exclusion Determination'' will be available in the docket where indicated under **ADDRESSES.**

List of Subjects in 33 CFR Part 165

Harbors, Marine safety, Navigation (water), Reporting and Record keeping requirements, Security measures, Waterways.

■ For the reasons discussed in the preamble, the Coast Guard amends 33 CFR part 165 as follows:

PART 165—REGULATED NAVIGATION AREAS AND LIMITED ACCESS AREAS

■ 1. The authority citation for part 165 continues to read as follows:

Authority: 33 U.S.C. 1231; 50 U.S.C. 191, 33 CFR 1.05–1(g), 6.04–1, 6.04–6, and 160.5; Department of Homeland Security Delegation No. 0170.

■ 2. Add § 165.T17–017 to read as follows:

§ 165.T17–017 Security Zone: Port of Anchorage, Knik Arm, Alaska.

(a) *Location.* The following area is a security zone: All navigable waters within 1000-yards of the Port of Anchorage. Specifically, the zone includes the waters of Knik Arm that are within an area bounded by a line drawn from a point located at 61°15.14′ North, 149°52.78′ West, then west to a point located at 61°15.14′ North, 149°53.84′ West, then south to a point located at 61°14.17′ North, 149°54.43′ West, then east to a point located at 61°13.94′ North, 149°53.55′ West.

(b) *Effective period.* This section is effective from 1:01 p.m. March 19, 2003 to 12:01 p.m. June 19, 2003.

(c) *Regulations.* (1) For the purpose of this section, the general regulations contained in 33 CFR 165.33 apply to all but the following vessels in the areas described in paragraph (a):

(i) Vessels scheduled to moor and offload or load cargo at the Port of Anchorage that have provided the Coast Guard with an Advance Notice of Arrival.

(ii) Tow vessels contracted, specifically Cook Inlet Tug and Barge, to assist vessels to the dock at the Port of Anchorage.

(2) All persons and vessels shall comply with the instructions of the Captain of the Port representative or the designated on-scene patrol personnel. These personnel are comprised of commissioned, warrant, and petty officers of the Coast Guard. Upon being hailed by a U.S. Coast Guard vessel by siren, radio, flashing light, or other means, the operator of a vessel shall proceed as directed.

Dated: March 19, 2003.

Ronald J. Morris,

Captain, Coast Guard, Captain of the Port, Western Alaska.

[FR Doc. 03–12048 Filed 5–14–03; 8:45 am]

BILLING CODE 4910–15–P

ENVIRONMENTAL PROTECTION AGENCY

40 CFR Part 52

[SIP NO. UT–001–0052a; FRL–7483–4]

Approval and Promulgation of Air Quality Implementation Plans; State of Utah; Continuous Emission Monitoring Program

AGENCY: Environmental Protection Agency (EPA).

ACTION: Direct final rule.

SUMMARY: EPA is taking direct final action approving State Implementation Plan (SIP) revisions submitted by the Governor of Utah on September 7, 1999 and February 11, 2003. The September 7, 1999 submittal revises Utah's Air Conservation Regulations (UACR) by repealing and re-enacting the Continuous Emission Monitoring Program (CEM) rule in order to clarify the requirements of the rule. The February 11, 2003 submittal makes additional revisions to the CEM rule to make it in agreement with Federal regulations and the Clean Air Act (CAA). The intended effect of this action is to make the CEM rule federally enforceable. This action is being taken under section 110 of the CAA.

DATES: This rule is effective on July 14, 2003 without further notice, unless EPA receives adverse comment by June 16, 2003. If adverse comment is received, EPA will publish a timely withdrawal of the direct final rule in the **Federal Register** informing the public that the rule will not take effect.

ADDRESSES: Written comments may be mailed to Richard R. Long, Director, Air and Radiation Program, Mailcode 8P-AR, Environmental Protection Agency (EPA), Region 8, 999 18th Street, Suite 300, Denver, Colorado, 80202. Copies of the documents relevant to this action are available for public inspection during normal business hours at the Air and Radiation Program, Environmental Protection Agency, Region 8, 999 18th Street, Suite 300, Denver, Colorado, 80202 and copies of the Incorporation by Reference material are available at the Air and Radiation Docket and Information Center, U.S. Environmental Protection Agency, Room B–108 (Mail Code 6102T), 1301 Constitution Ave., NW., Washington, DC 20460. Copies of the State documents relevant to this action are available for public inspection at the Utah Department of Environmental Quality, Division of Air Quality, 150 North 1950 West, Salt Lake City, Utah 84114.

FOR FURTHER INFORMATION CONTACT: Laurel Dygowski, EPA, Region 8, (303) 312–6144.

SUPPLEMENTARY INFORMATION: Throughout this document, wherever the term ''we'' or ''our'' is used means EPA.

I. Summary of SIP Revisions

A. September 7, 1999 Submittal

On September 7, 1999 and February 11, 2003, the Governor of Utah submitted revisions to the SIP. The September 7, 1999 submittal revises Utah's Air Conservation Regulations (UACR) by repealing and re-enacting the Continuous Emission Monitoring Program (CEM) rule, R307–170, in order to clarify the requirements of the rule. R307–170 applies to sources in Utah that use continuous monitoring systems to report their emissions. The changes to the CEM rule clarify points which were vague in the old rule, identify reporting parameters, reduce quarterly reporting for some CEM sources, and require electronic data reporting. The rule is also changed to reflect that when sources are planning on conducting a relative accuracy test audit, they must give notice to the executive secretary forty-five days instead of thirty days before performing a relative accuracy test audit and also submit the pretest protocol. In addition, the new rule separates monitor unavailability into categories which are exempt and non-exempt for reporting purposes and does not require reporting emissions during shutdowns.

B. February 11, 2003 Submittal

On April 2, 2002, EPA Region 8 sent a letter from Richard Long, Director, Air and Radiation Program, to Richard Sprott, Director, Utah Division of Air Quality to explain that certain sections in R307–170, as submitted on

September 7, 1999, were not approvable. Specifically, the letter pointed out a typographical error in R307–170–4, as well as director discretion provisions in the following sections: R307–170–5(c), R307–170–5(d) and R307–107–9(4)(c). Director discretion means that sections R307–170–5(c), R307–170–5(d) and R307–107–9(4)(c) contain language that allows the State to approve alternative sampling methods and determine when continuous emission monitoring breakdowns are not a violation. These director discretion provisions essentially allow for a variance from SIP requirements, which is not allowed under section 110(i) of the Clean Air Act. The April 2, 2002 letter stated that unless the State corrected these provisions, we would not be able to approve them. On February 11, 2003, the Governor of Utah submitted revisions to R307–170 to correct the typographical error in R307–170–4 and director discretion provisions in R307–170–5(c), R307–170–5(d) and R307–107–9(4)(c).

We have reviewed the revisions identified above. We believe the revisions are acceptable and are approving them into the SIP.

II. Final Action

EPA is approving SIP revisions submitted by the Governor of Utah on September 7, 1999 and February 11, 2003. The September 7, 1999 submittal revises UACR by repealing and re-enacting R307–170, CEM rule, in order to clarify the requirements of the rule. The February 11, 2003 submittal makes additional revisions to the CEM rule to make it in agreement with Federal regulations and the CAA.

Section 110(l) of the Clean Air Act states that a SIP revision cannot be approved if the revision would interfere with any applicable requirement concerning attainment and reasonable further progress towards attainment of the NAAQS or any other applicable requirements of the Act. The Utah SIP revisions that are the subject of this document do not interfere with the maintenance of the NAAQS or any other applicable requirement of the Act because the revisions meet the requirements of 40 CFR 51.214, 40 CFR 51, Appendix P and 40 CFR 60. Therefore, section 110(l) requirements are satisfied.

EPA is publishing this rule without prior proposal because the Agency views this as a noncontroversial amendment and anticipates no adverse comments. However, in the ''Proposed Rules'' section of today's **Federal Register** publication, EPA is publishing a separate document that will serve as the proposal to approve the SIP revision if adverse comments be filed. This rule will be effective July 14, 2003 without further notice unless the Agency receives adverse comments by June 16, 2003. If the EPA receives adverse comments, EPA will publish a timely withdrawal in the **Federal Register** informing the public that the rule will not take effect. EPA will address all public comments in a subsequent final rule based on the proposed rule. The EPA will not institute a second comment period on this action. Any parties interested in commenting must do so at this time. Please note that if EPA receives adverse comment on an amendment, paragraph, or section of this rule and if that provision may be severed from the remainder of the rule, EPA may adopt as final those provisions of the rule that are not the subject of an adverse comment.

III. Statutory and Executive Order Review

Under Executive Order 12866 (58 FR 51735, October 4, 1993), this action is not a ''significant regulatory action'' and therefore is not subject to review by the Office of Management and Budget. For this reason, this action is also not subject to Executive Order 13211, ''Actions Concerning Regulations That Significantly Affect Energy Supply, Distribution, or Use'' (66 FR 28355, May 22, 2001). This action merely approves state law as meeting Federal requirements and imposes no additional requirements beyond those imposed by state law. Accordingly, the Administrator certifies that this rule will not have a significant economic impact on a substantial number of small entities under the Regulatory Flexibility Act (5 U.S.C. 601 *et seq.*). Because this rule approves pre-existing requirements under state law and does not impose any additional enforceable duty beyond that required by state law, it does not contain any unfunded mandate or significantly or uniquely affect small governments, as described in the Unfunded Mandates Reform Act of 1995 (Pub. L. 104–4).

This rule also does not have tribal implications because it will not have a substantial direct effect on one or more Indian tribes, on the relationship between the Federal Government and Indian tribes, or on the distribution of power and responsibilities between the Federal Government and Indian tribes, as specified by Executive Order 13175 (65 FR 67249, November 9, 2000). This action also does not have Federalism implications because it does not have substantial direct effects on the States, on the relationship between the national government and the States, or on the distribution of power and responsibilities among the various levels of government, as specified in Executive Order 13132 (64 FR 43255, August 10, 1999). This action merely approves a state rule implementing a Federal standard, and does not alter the relationship or the distribution of power and responsibilities established in the Clean Air Act. This rule also is not subject to Executive Order 13045 ''Protection of Children from Environmental Health Risks and Safety Risks'' (62 FR 19885, April 23, 1997), because it is not economically significant.

In reviewing SIP submissions, EPA's role is to approve state choices, provided that they meet the criteria of the Clean Air Act. In this context, in the absence of a prior existing requirement for the State to use voluntary consensus standards (VCS), EPA has no authority to disapprove a SIP submission for failure to use VCS. It would thus be inconsistent with applicable law for EPA, when it reviews a SIP submission, to use VCS in place of a SIP submission that otherwise satisfies the provisions of the Clean Air Act. Thus, the requirements of section 12(d) of the National Technology Transfer and Advancement Act of 1995 (15 U.S.C. 272 note) do not apply. This rule does not impose an information collection burden under the provisions of the Paperwork Reduction Act of 1995 (44 U.S.C. 3501 *et seq.*).

The Congressional Review Act, 5 U.S.C. 801 *et seq.*, as added by the Small Business Regulatory Enforcement Fairness Act of 1996, generally provides that before a rule may take effect, the agency promulgating the rule must submit a rule report, which includes a copy of the rule, to each House of the Congress and to the Comptroller General of the United States. EPA will submit a report containing this rule and other required information to the U.S. Senate, the U.S. House of Representatives, and the Comptroller General of the United States prior to publication of the rule in the **Federal Register**. A major rule cannot take effect until 60 days after it is published in the **Federal Register**. This action is not a ''major rule'' as defined by 5 U.S.C. section 804(2).

Under section 307(b)(1) of the Clean Air Act, petitions for judicial review of this action must be filed in the United States Court of Appeals for the appropriate circuit by July 14, 2003. Filing a petition for reconsideration by the Administrator of this final rule does not affect the finality of this rule for the purposes of judicial review nor does it

extend the time within which a petition for judicial review may be filed, and shall not postpone the effectiveness of such rule or action. This action may not be challenged later in proceedings to enforce its requirements. (See section 307(b)(2).)

List of Subjects in 40 CFR Part 52

Environmental protection, Air pollution control, Carbon monoxide, Incorporation by reference, Intergovernmental relations, Lead, Nitrogen dioxide, Ozone, Particulate matter, Reporting and recordkeeping requirements, Sulfur oxides, Volatile organic compounds.

Dated: April 3, 2003.

Robert E. Roberts,

Regional Administrator, Region 8.

■ 40 CFR part 52 is amended as follows:

PART 52—[AMENDED]

1. The authority citation for part 52 continues to read as follows:

Authority: 42 U.S.C. 7401 *et seq.*

Subpart TT—Utah

■ 2. Section 52.2320 is amended by adding paragraph (c)(57) to read as follows:

§ 52.2320 Identification of plan.

* * * * *

(c) * * *

(57) On September 7, 1999 and February 11, 2003, the Governor of Utah submitted revisions to the SIP. The submittals revise Utah's Air Conservation Regulations (UACR), R307–170, Continuous Emission Monitoring Program, by repealing and re-enacting the rule to clarify requirements of the rule. The revisions are being approved into the SIP.

(i) Incorporation by reference.

(A) UACR R307–170, effective 4/1/1999, except sections R307–170–4, R307–170–5 and R307–170–9.

(B) UACR sections R307–170–4, R307–170–5 and R307–170–9, effective December 5, 2002.

[FR Doc. 03–12027 Filed 5–14–03; 8:45 am]

BILLING CODE 6560–50–P

ENVIRONMENTAL PROTECTION AGENCY

40 CFR Parts 52 and 81

[CO–001–0070a; FRL–7489–4]

Approval and Promulgation of Air Quality Implementation Plans; Colorado; Designation of Areas for Air Quality Planning Purposes, Aspen

AGENCY: Environmental Protection Agency (EPA).

ACTION: Direct final rule.

SUMMARY: EPA is taking direct final action to approve a State Implementation Plan (SIP) revision submitted by the Governor of the State of Colorado on November 9, 2001, for the purpose of redesignating the Aspen, Colorado area from nonattainment to attainment for particulate matter with an aerodynamic diameter less than or equal to a nominal 10 micrometers (PM_{10}) under the 1987 standards. The Governor's submittal, among other things, documents that the Aspen area has attained the PM_{10} national ambient air quality standards (NAAQS), requests redesignation to attainment and includes a maintenance plan for the area demonstrating maintenance of the PM_{10} NAAQS for ten years. EPA is approving this redesignation request and maintenance plan because Colorado has met the applicable requirements of the Clean Air Act (CAA), as amended. Upon the effective date of this approval, the Aspen area will be designated attainment for the PM_{10} NAAQS. This action is being taken under sections 107, 110, and 175A of the Clean Air Act.

DATES: This rule is effective on July 14, 2003, without further notice, unless EPA receives adverse comment by June 16, 2003. If adverse comment is received, EPA will publish a timely withdrawal of the direct final rule in the **Federal Register** informing the public that the rule will not take effect.

ADDRESSES: Written comments may be mailed to Richard R. Long, Director, Air and Radiation Program, Mailcode 8P–AR, Environmental Protection Agency (EPA), Region VIII, 999 18th Street, Suite 300, Denver, Colorado 80202. Copies of the documents relevant to this action are available for public inspection during normal business hours at the Air and Radiation Program, Environmental Protection Agency, Region VIII, 999 18th Street, Suite 300, Denver, Colorado 80202 and copies of the Incorporation by Reference material are available at the Air and Radiation Docket and Information Center, Environmental Protection Agency, Room B–108 (Mail Code 6102T), 1301 Constitution Ave., NW., Washington, DC 20460. Copies of the State documents relevant to this action are available for public inspection at the Colorado Department of Public Health and Environment, Air Pollution Control Division, 4300 Cherry Creek Drive South, Denver, Colorado 80246–1530.

FOR FURTHER INFORMATION CONTACT: Libby Faulk, EPA, Region VIII, (303) 312–6083.

SUPPLEMENTARY INFORMATION: Throughout this document, wherever ''we,'' ''us,'' or ''our'' are used, we mean the Environmental Protection Agency (EPA).

Table of Contents

I. EPA's Final Action
What Action Is EPA Taking in this Direct Final Rule?
II. Summary of Redesignation Request and Maintenance Plan
A. What Requirements Must Be Followed for Redesignation to Attainment?
B. Does the Aspen Redesignation Request and Maintenance Plan Meet the CAA Requirements?
C. Have the Transportation Conformity Requirements Been Met?
D. Did Colorado Follow the Proper Procedures for Adopting this Action?
III. Background
IV. CAA Section 110(l) Requirements
V. Statutory and Executive Order Reviews

I. EPA's Final Action

What Action Is EPA Taking in This Direct Final Rule?

We are approving the Governor's submittal of November 9, 2001, that requests redesignation of the Aspen nonattainment area to attainment for the 1987 PM_{10} standards. Included in Colorado's submittal are changes to the ''State Implementation Plan—Specific Regulations for Nonattainment—Attainment/Maintenance Areas (Local Areas)'' which we are approving, under section 110 of the CAA, into Colorado's SIP. We are also approving the maintenance plan for the Aspen PM_{10} nonattainment area, which was submitted with the Governor's November 9, 2001, redesignation request. We are approving this request and maintenance plan because Colorado has adequately addressed all of the requirements of the CAA for redesignation to attainment applicable to the Aspen PM_{10} nonattainment area. Upon the effective date of this action, the Aspen area designation status under 40 CFR part 81 will be revised to attainment.

EPA is publishing this rule without prior proposal because the Agency views this as a noncontroversial amendment and anticipates no adverse

comments. However, in the ''Proposed Rules'' section of today's **Federal Register** publication, EPA is publishing a separate document that will serve as the proposal to approve the SIP revision if adverse comments are filed. This rule will be effective July 14, 2003, without further notice unless the Agency receives adverse comments by June 16, 2003. If the EPA receives adverse comments, EPA will publish a timely withdrawal in the **Federal Register** informing the public that the rule will not take effect. EPA will address all public comments in a subsequent final rule based on the proposed rule. The EPA will not institute a second comment period on this action. Any parties interested in commenting must do so at this time. Please note that if EPA receives adverse comment on an amendment, paragraph, or section of this rule and if that provision may be severed from the remainder of the rule, EPA may adopt as final those provisions of the rule that are not the subject of an adverse comment.

II. Summary of Redesignation Request and Maintenance Plan

A. What Requirements Must Be Followed for Redesignations to Attainment?

In order for a nonattainment area to be redesignated to attainment, the following conditions in section 107(d)(3)(E) of the CAA must be met:

(i) We must determine that the area has attained the NAAQS;

(ii) The applicable implementation plan for the area must be fully approved under section 110(k) of the CAA;

(iii) We must determine that the improvement in air quality is due to permanent and enforceable reductions in emissions resulting from implementation of the applicable implementation plan and applicable Federal air pollutant control regulations and other permanent and enforceable reductions;

(iv) We must fully approve a maintenance plan for the area as meeting the requirements of CAA section 175A; and,

(v) The State containing such an area must meet all requirements applicable to the area under section 110 and part D of the CAA.

Our September 4, 1992, guidance entitled ''Procedures for Processing Requests to Redesignate Areas to Attainment'' outlines how to assess the adequacy of redesignation requests against the conditions listed above.

The following is a brief discussion of how Colorado's redesignation request and maintenance plan meet the requirements of the CAA for redesignation of the Aspen area to attainment for PM_{10}.

B. Does the Aspen Redesignation Request and Maintenance Plan Meet the CAA Requirements?

i. Attainment of the PM_{10} NAAQS

A State must demonstrate that an area has attained the PM_{10} NAAQS through submittal of ambient air quality data from an ambient air monitoring network representing maximum PM_{10} concentrations. The data, which must be quality assured and recorded in the Aerometric Information Retrieval System (AIRS), must show that the average annual number of expected exceedances for the area is less than or equal to 1.0, pursuant to 40 CFR 50.6. In making this showing, the three most recent years of complete air quality data must be used.

Colorado operates one PM_{10} monitoring site in the Aspen PM_{10} nonattainment area. For this redesignation request, the Colorado Air Pollution Control Division (APCD) designated the Tapered Element Oscillating Microbalance (TEOM) monitor as the primary sampler for determining attainment of the PM_{10} NAAQS in the Aspen area, beginning in 1998. Colorado submitted ambient air quality data from the monitoring site which demonstrate that the area has attained the PM_{10} NAAQS. These air quality data were quality-assured and placed in AIRS. The 24-hour PM_{10} NAAQS was exceeded once in Aspen in 1991 and the annual PM_{10} NAAQS has never been exceeded. We reviewed the three most recent years of data for the area (1999–2001) and determined that the data is complete (*i.e.*, data are available for at least 75% of the scheduled PM_{10} samples per quarter) with no recorded violations of either the 24-hour or annual PM_{10} NAAQS. We believe that Colorado has adequately demonstrated, through ambient air quality data, that the PM_{10} NAAQS have been attained in the Aspen area.

ii. State Implementation Plan Approval

Those States containing initial moderate PM_{10} nonattainment areas were required by the 1990 amendments to the CAA to submit a SIP by November 15, 1991, which demonstrated attainment of the PM_{10} NAAQS by December 31, 1994. To approve a redesignation request, the SIP for the area must be fully approved under section 110(k) and must satisfy all requirements that apply to that area. The Aspen PM_{10} SIP was initially submitted by Colorado on January 15, 1992, with revisions submitted on March 17, 1993, and December 9, 1993. EPA fully approved the PM_{10} SIP for Aspen on September 14, 1994 (59 FR 47088). Additional revisions consisting of further updating of the technical and administrative information, adopting emission budgets for the Aspen area, and removing the voluntary no-drive program from consideration as part of the Federal SIP were submitted by Colorado on March 13, 1995, and were approved by EPA on December 17, 1997 (62 FR 66007). The PM_{10} SIP for Aspen was approved as meeting the moderate PM_{10} nonattainment plan requirements that were due to EPA on November 15, 1991.

iii. Improvement in Air Quality Due to Permanent and Enforceable Measures

Section 107(d)(3)(E)(iii) of the CAA provides that for an area to be redesignated to attainment, the Administrator must determine that the improvement in air quality is due to emission reductions which are permanent and enforceable. Control measures in the Aspen PM_{10} element of the Colorado SIP were adopted by the Colorado Air Quality Control Commission in January 1993 and November 1993, and were approved by EPA on September 14, 1994 (59 FR 47088). The primary sources of PM_{10} emissions in the Aspen area are re-entrained road dust (from highways, paved roads, chip sealed roads, and unpaved roads) and woodburning. The permanent and enforceable control measures that brought the Aspen area into attainment of the NAAQS are explained in more detail below.

The City of Aspen and Pitkin County have adopted local ordinances that limit the number of woodburning devices in new construction in the Aspen area, and the City of Aspen adopted a local ordinance that requires emission controls for new restaurant grills. These woodburning and restaurant controls were adopted and implemented locally in the late 1980's and early 1990's and included in State regulation in 1993 (section III.C.4. of the State Implementation Plan—Specific Regulations for Nonattainment—Attainment/Maintenance Areas (Local Areas)). The rule was approved by EPA into the SIP in 1994.

In addition, Aspen has adopted street sanding controls that require the use of street sanding material containing less than ''one percent fines'' with a durability index of less than 30 percent. This control strategy was adopted in 1993 and approved by EPA in 1994, and is defined in detail in section III.C.1. of the ''State Implementation Plan—

Specific Regulations for Nonattainment—Attainment/Maintenance Areas (Local Areas).''

In addition, Aspen has adopted street sweeping control requirements for any user of street sanding materials on defined roadways in the Aspen attainment/maintenance area. Street cleaning using broom sweepers or any other sweepers with equal efficiency must be performed within four days of the roadways becoming free and clear of snow and ice following each sanding deployment. These requirements are defined in detail in section III.C.2. of the ''State Implementation Plan—Specific Regulations for Nonattainment—Attainment/Maintenance Areas (Local Areas).''

Aspen also has paid parking requirements that were adopted in 1993 and approved by EPA in 1994 and will remain as part of the federal SIP. Parking on public streets within the City of Aspen's commercial core and surrounding residential areas is restricted through parking fees and permits to reduce traffic and encourage transit ridership. This requirement is defined in detail in section III.C.3. of the ''State Implementation Plan—Specific Regulations for Nonattainment—Attainment/Maintenance Areas (Local Areas).''

In addition, the City of Aspen implemented local transit measures such as expansion of the bus fleet by 14 buses, establishment of a 400 space Park 'n Ride lot and a 250 space intercept parking lot, and establishment of cross-town and intercept lot shuttle services. These measures were adopted in 1993 and approved by EPA in 1994 and have been completed.

In addition to the State and local control measures, the Federal Motor Vehicle Emission Control Program has reduced PM_{10} emissions in Aspen as older, higher emitting diesel vehicles are replaced with newer vehicles that meet tighter emission standards. Overall, despite growth in the Aspen nonattainment area (*e.g.*, in population, employment and vehicle miles traveled), attainment of the PM_{10} NAAQS has been demonstrated. We have evaluated the various control measures, in addition to the 1997 attainment year emission inventory and the projected emissions described below, and have concluded that the continued attainment of the PM_{10} NAAQS in the Aspen area has resulted from emission reductions that are permanent and enforceable.

iv. Fully Approved Maintenance Plan Under Section 175A of the CAA

Section 107(d)(3)(E) of the CAA requires that, for a nonattainment area to be redesignated to attainment, we must fully approve a maintenance plan which meets the requirements of section 175A of the CAA. The plan must demonstrate continued attainment of the relevant NAAQS in the area for at least 10 years after our approval of the redesignation. Eight years after our approval of a redesignation, Colorado must submit a revised maintenance plan demonstrating attainment for the 10 years following the initial 10 year period. The maintenance plan must also contain a contingency plan to ensure prompt correction of any violation of the NAAQS. (*See* sections 175A(b) and (d).) Our September 4, 1992, guidance outlines 5 core elements that are necessary to ensure maintenance of the relevant NAAQS in an area seeking redesignation from nonattainment to attainment. Those elements, as well as guidelines for subsequent maintenance plan revisions, are as follows:

a. Attainment Inventory

The maintenance plan should include an attainment emission inventory to identify the level of emissions in the area which is sufficient to attain the NAAQS. An emission inventory for Aspen was developed for the attainment year 1997 as well as a projection inventory for the year 2015. The emission inventory incorporates the emission estimates for woodburning, arterial and local street re-entrained emissions, gravel road emissions, restaurant exhaust emissions, and mobile exhaust emissions that are contained in the nonattainment area SIP Element that was approved by EPA on September 22, 1994. The emission inventory reflects 1997 emissions for airport emissions based on information provided by the Federal Aviation Administration (FAA) and highway re-entrained road dust emissions using the latest traffic counts from the Colorado Department of Transportation (CDOT). There are no stationary sources in the attainment/maintenance area. Summary emission figures from the 1997 attainment year and the 2015 projected year are provided in Tables 1, 2 and 3 below.

TABLE 1.—1997 AND 2015 PM_{10} TOTAL EMISSION INVENTORY FOR ROAD DUST ACTIVITY IN POUNDS PER WINTER DAY FOR ASPEN/PITKIN COUNTY

	Highway 82	Paved roads		Gravel roads
		Arterial	Local	
1997	7540	1468	1000	79
2015	12109	2358	1606	127

*1997 emissions from Highway 82, paved arterial roads, paved local roads, and gravel roads were increased by 60.6% based on long-term traffic projections from CDOT (58%) through 2015 and adding some additional VMT (1.65%) in the year 2015 to account for eliminating from the federally-approved plan some transit and parking measures.

TABLE 2.—1997 AND 2015 PM_{10} TOTAL EMISSION INVENTORY FOR RESTAURANT, MOBILE SOURCE, AND AIRCRAFT ACTIVITY IN POUNDS PER WINTER DAY FOR ASPEN/PITKIN COUNTY

	Vehicle exhaust	Aircraft	Restaurants
1997	44	28	27
2015	44	44	36

*1997 emissions from restaurants were increased by 33.1% based on Pitkin County population projections to determine 2015 emissions.
**Aircraft emissions are based on FAA activity projections.
***1997 emissions from vehicle exhaust are assumed to remain constant through 2015.

TABLE 3.—1997 AND 2015 PM_{10} TOTAL EMISSION INVENTORY FOR WOOD STOVES/INSERTS AND FIREPLACES IN POUNDS PER WINTER DAY FOR ASPEN/PITKIN COUNTY

	Wood stoves/ inserts	Fireplaces
1997	84	233
2015	112	233

* 1997 emissions from wood stoves/inserts were increased by 33.1% based on Pitkin County population projections to determine 2015 emissions.

** Fireplace emissions were held at 1997 levels due to a city/county cap on new fireplace construction.

More detailed descriptions of the 1997 attainment year inventory and the 2015 projected inventory are documented in the maintenance plan in chapter 3, section B and in the Colorado technical support documentation. Colorado's submittal contains detailed emission inventory information that was prepared in accordance with EPA emission inventory guidance.[1] Following our review, we have determined that Colorado prepared an adequate attainment inventory for the area.

b. Maintenance Demonstration

A State may generally demonstrate maintenance of the NAAQS by either showing that future emissions of a pollutant or its precursors will not exceed the level of the attainment inventory, or by modeling to show that the future mix of sources and emission rates will not cause a violation of the NAAQS. Colorado chose the modeling approach for the Aspen area.

The maintenance demonstration for the Aspen area uses the chemical mass balance (CMB) roll-forward methodology, which is the same level of modeling used in the original attainment demonstration for the moderate PM_{10} SIP for this area. The CMB receptor model data are used to identify the sources of emissions that influence PM_{10} concentrations in the area. Colorado used the attainment inventories to further refine the CMB source identification and then apportion the design day concentration. The design day concentration was determined using EPA's ''Table look-up'' method. Based on the number of samples collected during a three year period from 1996–1998 [2] (1005 samples), the third highest concentration measured during that period is used as the design value. Because the third highest concentration measured during that period occurred outside of the traditional late winter/early spring high pollution season, the second highest concentration of 89 μg/m³ was selected as the design value for this redesignation request and maintenance plan. Colorado prepared a maintenance inventory for the year 2015 and rolled forward the design day concentration based on the changes that occurred in the emission inventory from the attainment year to the maintenance year. Based on this process, the Aspen 2015 maintenance concentration is 130 μg/m³. Since these 2015 projections for Aspen are below the 24-hour PM_{10} NAAQS of 150 μg/m³, maintenance is demonstrated.

Although EPA would normally insist on some interim year projections between the attainment year and 2015, we have no reason to believe that total emissions will be greater than the 2015 projections in any of the interim years. Colorado applied simple, environmentally conservative, growth rates to all source categories. Thus, total emissions in all years before 2015 should be less than 2015 total emissions and no interim year projections are required.

Since no violations of the annual PM_{10} NAAQS have ever occurred in Aspen and since the maintenance demonstration clearly shows maintenance of the 24-hour PM_{10} NAAQS in this area through the year 2015, it is reasonable and adequate to assume that protection of the 24-hour standard will be sufficient to protect the annual standard as well. Thus, EPA believes Colorado has adequately demonstrated that the Aspen area will maintain the PM_{10} NAAQS for at least the next ten years.

i. Control Strategy

According to the Calcagni memorandum, any assumptions concerning emission rates must reflect permanent, enforceable measures. A State can't take credit in the maintenance demonstration for reductions unless there are regulations in place requiring those reductions or the reductions are otherwise shown to be permanent. States are expected to maintain implemented control strategies despite redesignation to attainment, unless such measures are shown to be unnecessary for maintenance or are replaced with measures that achieve equivalent reductions. In preparing the Aspen PM_{10} maintenance plan, Colorado has chosen to retain the street sand specifications, street sweeping requirements, paid parking provisions, and woodburning and restaurant emissions requirements previously included in the SIP, with some minor revisions which are explained in more detail below.

Colorado is making minor revisions to the materials applicability section (III.C.1.a and III.C.2.a, ''Applicability'') of the street sanding and street sweeping requirements (contained in the State Implementation Plan—Specific Regulations for Nonattainment—Attainment/Maintenance Areas (Local Areas). These minor revisions delete language specific to salt and de-icing material making the language consistent with the SIP's federally approved definition of ''Street Sanding Materials'' which excludes salt and other de-icing chemicals. Since these changes do not change the enforceability of the street sanding or street sweeping control measures and make the language consistent with the SIP's federally

[1] EPA's current guidance on the preparation of PM_{10} emission inventories includes, ''PM_{10} Emission Inventory Requirements,'' September 1994, ''Emission Inventory Improvement Program Technical Report Series, Volumes I–VII,'' July 1997 and September 1999, ''Revised 1999 National Emission Inventory Preparation Plan,'' February 2001.

[2] Colorado used years 1996–1998 instead of 1998–2000 to develop the design value because there were data completeness issues with their Hi-vol data in 1999 and 2000. Using the Hi-vol data from 1996–1998 to calculate the design value resulted in the highest design value for developing the maintenance plan, and the higher the design value, the higher the predicted concentration in the maintenance year. In other words, the State's approach was conservative. Use of TEOM data alone would have resulted in a lower design value, and thus, a lower predicted concentration in the maintenance year. Although the TEOM monitor recorded a value of 109 μg/m³ in 1999—a higher value than the three highest Hi-vol values in 1996–1998—the use of the 1999 TEOM data would not have altered the design value. This is because the high three values from both monitors would have fallen within the high pollution season, and the 3rd high—89 μg/m³—would've been the appropriate design value. Colorado used the TEOM monitoring method for data collected from 1998–2000 to demonstrate attainment because to demonstrate attainment, the latest 3 years of data must be used, and the TEOM is an equivalent monitoring method.

approved definition, we are approving the changes.

Colorado also submitted revisions to their SIP—Specific Regulations that change the reporting requirements for street sanding materials, street sweeping, and the implementation section for local control strategies in Aspen to recordkeeping requirements only and delete the reporting requirements for Division Audit Authority and for paid parking. These changes require users to retain records for 2 years. Users are no longer required to submit monthly and annual reports to the State. Since these changes in reporting requirements do not change the enforceability of the street sanding control measure, street sweeping control measure, paid parking control measure, or the implementation of local control strategies in Aspen, we are approving the changes.

Colorado also submitted revisions to section III.C.4 of the SIP—Specific Regulations. The City of Aspen and Pitkin County adopted local ordinances in the late 1980's and early 1990's that limit the number of woodburning devices in new construction in the Aspen area. These ordinances were included in State regulations in 1993 (section III.C.4 of the State Implementation Plan—Specific Regulations for Nonattainment—Attainment/Maintenance Areas (Local Areas)). EPA approved section III.C.4 in 1994. Colorado's changes to section III.C.4 allow the City and the County to revise the ordinances to allow greater use of natural gas devices. Since the use of such devices will not increase primary PM_{10} emissions, we are approving the changes.

In addition to the revised control measures, there are also certain control measures which are being removed from the control strategy with this maintenance plan. This is acceptable under the Calcagni Memorandum as long as the area can still demonstrate maintenance of the PM_{10} standard in its projections. Through this redesignation, Colorado is requesting removal of specific control measures that were previously approved in the Aspen PM_{10} SIP. The control measures being removed are expansion of the bus fleet by 14 buses, establishment of a 400 space Park'n Ride lot and a 250 space intercept parking lot, establishment of intercept lot and crosstown shuttle services, and establishment of a bus priority lane (which was removed from service shortly after implementation because of the severe traffic congestion that resulted from converting a driving lane into the bus lane). The vehicle miles traveled (VMT) reduction credits that were assigned to these measures in the 1994 nonattainment SIP Element were used to determine VMT increases in 2015 for all roads in order to account for the potential for emissions increases due to the elimination of these measures. In accordance with section 175A(d) of the CAA, these transit control measures are being retained as possible contingency measures that could be re-implemented should the Aspen area violate the PM_{10} NAAQS requirements.

Colorado is also eliminating a voluntary woodburning curtailment program. The voluntary woodburning curtailment program was not implemented because forecasts of high pollution events were never issued by the Air Pollution Control Division due to low PM_{10} levels. However, the program is being retained as a potential contingency measure to bring the Aspen area back into compliance with the PM_{10} NAAQS should a violation occur. Colorado is also eliminating the President's Day event strategies program of maximized sweeping and driving reduction efforts, which were adopted in 1993. These programs did not receive emission reduction credits and were sporadically implemented.

Although there are no stationary sources located in the Aspen attainment/maintenance area, the State's comprehensive permit rules will limit emissions from any new source that may, in the future, locate in the area. These rules include: (1) Regulation No. 3, ''Air Pollution Emission Notices, Construction Permits and Fees, Operating Permits, and Including the Prevention of Significant Deterioration,'' (2) the ''Common Provisions'' regulation, and (3) Regulation No. 6, ''Standards for Performance for New Stationary Sources.'' The Common Provisions, and Part A and B of Regulation No. 3 are already included in the approved SIP. Regulation No. 6 implements the federal standards of performance for new stationary sources. This reference to Regulation No. 6 shall not be construed to mean that this regulation is included in the SIP. Once this redesignation request and maintenance plan is approved by the EPA, the prevention of significant deterioration (PSD) permitting requirements become effective.

In addition to the State and local control measures mentioned above, the Federal Motor Vehicle Emission Control Program remains in effect and will continue to reduce PM_{10} emissions in Aspen as older, higher-emitting diesel vehicles are replaced with newer vehicles that meet tighter emission standards.

c. Monitoring Network

Once a nonattainment area has been redesignated to attainment, the State must continue to operate an appropriate air quality monitoring network, in accordance with 40 CFR part 58, to verify the attainment status of the area. The maintenance plan should contain provisions for continued operation of air quality monitors that will provide such verification. Colorado operates one PM_{10} monitoring site in the Aspen area. We approve this site annually, and any future change would require discussion with, and approval from, us. In their November 9, 2001, submittal, Colorado committed to continue to operate this PM_{10} monitoring station in Aspen, in accordance with 40 CFR part 58. Detailed information regarding the State's monitoring efforts and historical monitoring data can be found in chapter 2 of the ''PM_{10} Redesignation Request and Maintenance Plan for the Aspen Area.''

d. Verification of Continued Attainment

A State's maintenance plan submittal should indicate how it will track the progress of the maintenance plan. This is necessary due to the fact that emission projections made for the maintenance demonstration depend on assumptions of point and area source growth. Colorado commits to operate the Aspen PM_{10} monitoring network and analyze the PM_{10} concentrations in accordance with 40 CFR part 58 to verify continued maintenance of the PM_{10} NAAQS. In addition, Colorado commits to track the progress of the Aspen maintenance plan through a periodic review (every three years) of the assumptions made in the emissions inventories to verify continued maintenance of the PM_{10} NAAQS in the Aspen area. EPA relies on these commitments in approving the Aspen maintenance plan.

e. Contingency Plan

Section 175A(d) of the CAA requires that a maintenance plan also include contingency provisions, as necessary, to promptly correct any violation of the NAAQS that occurs after redesignation of the area. For the purposes of section 175A, a State is not required to have fully adopted contingency measures that will take effect without further action by the State in order for the maintenance plan to be approved. However, the contingency plan is an enforceable part of the SIP and should ensure that contingency measures are adopted expeditiously when a violation of the NAAQS has occurred in a redesignated area. The plan should clearly identify

the measures to be adopted, a schedule and procedure for adoption and implementation, and a specific time limit for action by the State. The State should also identify the specific indicators, or triggers, which will be used to determine when the contingency plan will be implemented.

Chapter 3, section H, contains the Aspen PM_{10} contingency plan. Exceedances trigger one level of response and violations trigger another. If there's an exceedance, APCD and local government staff will develop appropriate contingency measures intended to prevent or correct a violation of the PM_{10} standard. APCD and local government staff will consider relevant information, including information about historical exceedances, meteorological data, the most recent estimates of growth and emissions, and whether the exceedance might be attributed to an exceptional event. The maintenance plan indicates that the State will generally notify EPA and local governments in the Aspen area within 30 days of the exceedance, but in no event later than 45 days. The process for exceedances will be completed within six months of the exceedance notification.

If a violation of the PM_{10} NAAQS has occurred, a public hearing process at the State and local level will begin. If the Air Quality Control Commission (AQCC) agrees that the implementation of local measures will prevent further exceedances or violations, the AQCC may endorse or approve of the local measures without adopting State requirements. If, however, the AQCC finds locally adopted contingency measures to be inadequate, the AQCC will adopt State enforceable measures as deemed necessary to prevent additional exceedances or violations. Contingency measures will be adopted and fully implemented within one year of the PM_{10} NAAQS violation. Any State-enforceable measures will become part of the next revised maintenance plan, submitted to us for approval.

The maintenance plan specifies the following as potential contingency measures for the Aspen area: Increased street sweeping; road paving requirements; more stringent street sand specifications; voluntary or mandatory woodburning curtailment or bans on all woodburning; expanded mandatory use of alternative de-icers; re-establishing nonattainment new source review permitting requirements for stationary sources; [3] transportation control measures designed to reduce vehicle miles traveled; re-implementing the following measures (but only if they are not being implemented at the time the contingency measures are triggered): expansion of the bus fleet by 14 buses, establishment of 400 Park 'n Ride lot spaces and a 250 space intercept parking lot, and establishment of intercept lot and cross-town shuttle services; or other measures as deemed appropriate, considering various factors.

f. Subsequent Maintenance Plan Revisions

In accordance with section 175A(b) of the CAA, the State of Colorado is required to submit a revision to the maintenance plan eight years after the redesignation of the Aspen area to attainment for PM_{10}. This revision is to provide for maintenance of the NAAQS for an additional 10 years following the first ten year period. Colorado commits, in the Aspen redesignation request, to submit a revised maintenance plan to EPA eight years after the approval of the redesignation request and maintenance plan.

v. Meeting Applicable Requirements of Section 110 and Part D of the CAA

In order for an area to be redesignated to attainment, section 107(d)(3)(E) requires that it must have met all applicable requirements of section 110 and part D of the CAA. We interpret this to mean that, for a redesignation request to be approved, the State must have met all requirements that applied to the subject area prior to, or at the time of, submitting a complete redesignation request. In our evaluation of a redesignation request, we don't need to consider other requirements of the CAA that became due after the date of the submission of a complete redesignation request.

a. Section 110 Requirements

Section 110(a)(2) contains general requirements for nonattainment plans. These requirements were met for Aspen with Colorado's January 15, 1992, submittal and revisions submitted on March 17, 1993, and December 9, 1993. EPA fully approved the Aspen PM_{10} SIP on September 14, 1994 (59 FR 47088). Additional revisions were submitted by the State on March 13, 1995, and were approved by EPA on December 17, 1997 (62 FR 66007).

b. Part D Requirements

Before a PM_{10} nonattainment area may be redesignated to attainment, the State must have fulfilled the applicable requirements of part D. Subpart 1 of part D establishes the general requirements applicable to all nonattainment areas, subpart 4 of part D establishes specific requirements applicable to PM_{10} nonattainment areas.

The requirements of sections 172(c) and 189(a) regarding attainment of the PM_{10} NAAQS, and the requirements of section 172(c) regarding reasonable further progress, imposition of Reasonably Available Control Measures (RACM), the adoption of contingency measures, and the submission of an emission inventory, have been satisfied through our September 14, 1994 (59 FR 47088), and December 17, 1997 (62 FR 66007), approvals of the Aspen PM_{10} SIP.

Although EPA's regulations (*see* 40 CFR 51.396) require that States adopt transportation conformity provisions in their SIPs for areas designated nonattainment or subject to an EPA-approved maintenance plan, we have decided that a transportation conformity SIP is not an applicable requirement for purposes of evaluating a redesignation request under section 107(d) of the CAA. This decision is reflected in EPA's 1996 approval of the Boston carbon monoxide redesignation. (*See* 61 FR 2918, January 30, 1996.)

Although there are no stationary sources currently located in the Aspen attainment/maintenance area, once the Aspen area is redesignated to attainment, the prevention of significant deterioration (PSD) requirements of part C of the CAA will apply. Colorado's PSD regulations, which we have previously approved as meeting all applicable Federal requirements (*See* 51 FR 31125, September 2, 1986), apply to any area designated as unclassifiable or attainment and, thus, will become fully effective in the Aspen area upon redesignation of the area to attainment.

c. Have the Transportation Conformity Requirements Been Met?

Transportation conformity is required by section 176(c) of the CAA. Our conformity rule requires that transportation plans, programs and projects conform to SIPs and that transportation activities will not produce new air quality violations, worsen existing violations, or delay timely attainment of the NAAQS. On March 2, 1999, the United States Court of Appeals for the District of Columbia Circuit issued a decision in *Environmental Defense Fund* v. *the*

[3] The maintenance plan refers to ''Re-establishing new source review permitting requirements for stastionary soruces.'' Given that PSD permitting requirements will apply to the area after the effective date of this action, we interpret the maintenance plan's reference to mean ''nonattainment new source review.''

Environmental Protection Agency, No. 97–1637, that we must make an affirmative determination that the submitted motor vehicle emission budgets contained in State Implementation Plans (SIPs) are adequate before they are used to determine the conformity of Transportation Plans or Transportation Improvement Programs. In response to the court decision, we make any submitted SIP revision containing an emission budget available for public comment and respond to these comments before announcing our adequacy determination. The criteria and process by which we determine whether a SIP's motor vehicle emission budgets are adequate for conformity purposes are outlined in 40 CFR 93.118(e)(4) and in the guidance ''Conformity Guidance on Implementation of March 2, 1999, Conformity Court Decision,'' dated May 14, 1999.

In the Aspen maintenance plan, Colorado established a new mobile source emissions budget of 16,244 lbs./day for the year 2015 and beyond. This budget is the total of the 2015 mobile source PM_{10} emissions and includes emissions from vehicle exhaust, highways, paved arterial and local roads, and gravel roads. EPA's approval of 16,244 lbs./day as the budget means that this value must be used for conformity determinations for 2015 and beyond.

EPA sent a letter to the Colorado Air Pollution Control Division (APCD) on May 16, 2002 stating that the motor vehicle emissions budget in the submitted Aspen PM_{10} maintenance plan is adequate. This finding has also been announced on EPA's conformity Web site: *http://www.epa.gov/oms/transp/conform/adequacy.htm.* We documented our adequacy determination for Aspen in the **Federal Register** on August 20, 2002 (67 FR 53925). The budgets took effect on September 4, 2002 (15 days after our announcement in the **Federal Register**).

d. Did Colorado Follow the Proper Procedures for Adopting This Action?

The CAA requires States to observe certain procedural requirements in developing implementation plans and plan revisions for submission. Section 110(a)(2) of the CAA provides that each implementation plan submitted by a State must be adopted after reasonable notice and public hearing. Section 110(l) of the CAA similarly provides that each revision to an implementation plan submitted by a State under the CAA must be adopted by such State after reasonable notice and public hearing.

Colorado held a public hearing for the proposed rule changes on January 11, 2001. The rulemaking was adopted by the Air Pollution Control Division (APCD) directly after the January 11, 2001, hearing and was formally submitted to EPA by the Governor on November 9, 2001. We have evaluated the Governor's submittal and have determined that Colorado met the requirements for reasonable notice and public hearing under section 110(a)(2) of the CAA.

III. Background

To implement our 1987 revisions to the PM_{10} NAAQS, on August 7, 1987 (52 FR 29383), we categorized areas of the nation into three groups based on the likelihood that protection of the PM_{10} NAAQS would require revisions of the existing SIP. We identified Aspen as a PM_{10} ''Group I'' area of concern, *i.e.*, areas with a strong likelihood of violating the PM_{10} NAAQS and requiring a substantial SIP revision. The Aspen area was among several Group I PM_{10} areas, all of which were designated and classified as moderate PM_{10} nonattainment areas by operation of law upon enactment of the Clean Air Act Amendments of 1990 (November 15, 1990). *See* 56 FR 56694 at 56705–706 (November 6, 1991).

By November 15, 1991, States containing initial moderate PM_{10} nonattainment areas were required to submit most elements of their PM_{10} SIPs. (*See* sections 172(c), 188, and 189 of the CAA.) Some provisions, such as PM_{10} contingency measures required by section 172(c)(9) of the CAA and nonattainment new source review (NSR) provisions, were due at later dates. In order for a nonattainment area to be redesignated to attainment, the above mentioned conditions in section 107(d)(3)(E) of the CAA must be met. We fully approved the PM_{10} SIP for Aspen on September 14, 1994 (59 FR 47088).

EPA promulgated new standards for PM_{10} on September 18, 1997. Areas were to be designated under the new PM_{10} standard by July 2000. On May 14, 1999, the United States Court of Appeals for the DC Circuit in *American Trucking Associations, Inc., et al.* v. *United States Environmental Protection Agency* vacated the 1997 PM_{10} standard. Because of the Court ruling, we are continuing to implement the pre-existing PM_{10} standard, and are therefore approving redesignations to qualified PM_{10} nonattainment areas. On November 9, 2001, the Governor of Colorado submitted a request to redesignate the Aspen moderate PM_{10} nonattainment area to attainment (for the 1987 PM_{10} NAAQS) and submitted a maintenance plan for the area.

IV. Consideration of CAA Section 110(l)

Section 110(l) of the CAA states that a SIP revision cannot be approved if the revision would interfere with any applicable requirement concerning attainment and reasonable further progress towards attainment of a NAAQS or any other applicable requirement of the CAA. As stated above, the Aspen area has shown continuous attainment of the PM_{10} NAAQS and has met the applicable Federal requirements for redesignation to attainment. The maintenance plan and associated SIP revisions will not interfere with attainment, reasonable further progress, or any other applicable requirement of the CAA.

V. Statutory and Executive Order Reviews

Under Executive Order 12866 (58 FR 51735, October 4, 1993), this action is not a ''significant regulatory action'' and therefore is not subject to review by the Office of Management and Budget. For this reason, this action is also not subject to Executive Order 13211, ''Actions Concerning Regulations That Significantly Affect Energy Supply, Distribution, or Use'' (66 FR 28355, May 22, 2001). This action merely approves State law as meeting Federal requirements and imposes no additional requirements beyond those imposed by State law. Accordingly, the Administrator certifies that this rule will not have a significant economic impact on a substantial number of small entities under the Regulatory Flexibility Act (5 U.S.C. 601 *et seq.*). Because this rule approves pre-existing requirements under State law and does not impose any additional enforceable duty beyond that required by State law, it does not contain any unfunded mandate or significantly or uniquely affect small governments, as described in the Unfunded Mandates Reform Act of 1995 (Pub. L. 104–4).

This rule also does not have tribal implications because it will not have a substantial direct effect on one or more Indian tribes, on the relationship between the Federal government and Indian tribes, or on the distribution of power and responsibilities between the Federal government and Indian tribes, as specified by Executive Order 13175 (65 FR 67249, November 9, 2000). This action also does not have federalism implications because it does not have substantial direct effects on the States, on the relationship between the national

government and the States, or on the distribution of power and responsibilities among the various levels of government, as specified in Executive Order 13132 (64 FR 43255, August 10, 1999). This action merely approves a State rule implementing a Federal standard, and does not alter the relationship or the distribution of power and responsibilities established in the Clean Air Act. This rule also is not subject to Executive Order 13045 ''Protection of Children from Environmental Health Risks and Safety Risks'' (62 FR 19885, April 23, 1997), because it is not economically significant.

In reviewing SIP submissions, EPA's role is to approve State choices, provided that they meet the criteria of the Clean Air Act. In this context, in the absence of a prior existing requirement for the State to use voluntary consensus standards (VCS), EPA has no authority to disapprove a SIP submission for failure to use VCS. It would thus be inconsistent with applicable law for EPA, when it reviews a SIP submission, to use VCS in place of a SIP submission that otherwise satisfies the provisions of the Clean Air Act. Thus, the requirements of section 12(d) of the National Technology Transfer and Advancement Act of 1995 (15 U.S.C. 272 note) do not apply. This rule does not impose an information collection burden under the provisions of the Paperwork Reduction Act of 1995 (44 U.S.C. 3501 *et seq.*).

The Congressional Review Act, 5 U.S.C. 801 *et seq.*, as added by the Small Business Regulatory Enforcement Fairness Act of 1996, generally provides that before a rule may take effect, the agency promulgating the rule must submit a rule report, which includes a copy of the rule, to each House of the Congress and to the Comptroller General of the United States. EPA will submit a report containing this rule and other required information to the U.S. Senate, the U.S. House of Representatives, and the Comptroller General of the United States prior to publication of the rule in the **Federal Register**. A major rule cannot take effect until 60 days after it is published in the **Federal Register**. This action is not a ''major rule'' as defined by 5 U.S.C. 804(2).

Under section 307(b)(1) of the Clean Air Act, petitions for judicial review of this action must be filed in the United States Court of Appeals for the appropriate circuit by July 14, 2003. Filing a petition for reconsideration by the Administrator of this final rule does not affect the finality of this rule for the purposes of judicial review nor does it extend the time within which a petition for judicial review may be filed, and shall not postpone the effectiveness of such rule or action. This action may not be challenged later in proceedings to enforce its requirements. (*See* section 307(b)(2).)

List of Subjects

40 CFR Part 52

Environmental protection, Air pollution control, Incorporation by reference, Intergovernmental relations, Particulate Matter, Reporting and recordkeeping requirements.

40 CFR Part 81

Air pollution control.

Dated: April 18, 2003.

Robert E. Roberts,

Regional Administrator, Region 8.

■ 40 CFR parts 52 and 81, chapter I, title 40 are amended as follows:

PART 52—[AMENDED]

■ 1. The authority citation for part 52 continues to read as follows:

Authority: 42 U.S.C. 7401 *et seq.*

Subpart G—Colorado

■ 2. Section 52.320 is amended by adding paragraph (c)(97) to read as follows:

§ 52.320 Identification of plan.

* * * * *

(c) * * *

(97) On November 9, 2001, the State of Colorado submitted a maintenance plan for the Aspen PM_{10} nonattainment area and requested that this area be redesignated to attainment for the PM_{10} National Ambient Air Quality Standards. The redesignation request and maintenance plan satisfy all applicable requirements of the Clean Air Act.

(i) Incorporation by reference.

(A) Colorado Air Pollution Control Division, ''State Implementation Plan—Specific Regulations for Nonattainment—Attainment/Maintenance Areas (Local Areas),'' 5 CCR 1001–20, revisions adopted January 11, 2001, effective February 28, 2001 as follows: Section III, which is titled ''Aspen/Pitkin County PM_{10} Attainment/Maintenance Area,'' and which supersedes and replaces all prior versions of Section III.

■ 3. Section 52.332 is amended by adding paragraph (m) to read as follows:

§ 52.332 Control strategy: Particulate matter.

* * * * *

(m) On November 9, 2001, the State of Colorado submitted a maintenance plan for the Aspen PM_{10} nonattainment area and requested that this area be redesignated to attainment for the PM_{10} National Ambient Air Quality Standards. The redesignation request and maintenance plan satisfy all applicable requirements of the Clean Air Act.

PART 81—[AMENDED]

■ 1. The authority citation for part 81 continues to read as follows:

Authority: 42 U.S.C. 7401 *et seq.*

■ 2. In section 81.306, the table entitled ''Colorado-PM–10'' is amended by revising the entries under Pitkin County for the ''Aspen/Pitkin County Area'' to read as follows:

§ 81.306 Colorado.

* * * * *

COLORADO—PM–10

Designated area	Designation		Classification	
	Date	Type	Date	Type
* * * *	*	*		*
Pitkin County:				
Aspen/Pitkin County Area—The area encompassed by the following Parcel ID numbers, as defined by the Pitkin County Planning Department: 2337–29, 2737–28, 2737–21, 2737–20, 2737–19, 2737–18, 2737–17, 2737–08, 2737–07, 2737–06, 2735–22, 2735–15, 2735–14, 2735–13, 2735–12, 2735–11, 2735–10, 2735–03, 2735–02, 2735–01, 2641–31, 2643–36, 2643–35, 2643–34, 2643–27, 2643–26.	7/14/03	Attainment.		
* * * *	*	*		*

* * * * *

[FR Doc. 03–12026 Filed 5–14–03; 8:45 am]

BILLING CODE 6560–50–P

FEDERAL COMMUNICATIONS COMMISSION

47 CFR Parts 73 and 74

[MM Docket No. 95–31; FCC 03–44]

RIN 3060–AH96

Reexamination of the Comparative Standard for Noncommercial Educational Applicants; Association of America's Public Television Stations' Motion for Stay of Low Power Television Auction (No. 81)

AGENCY: Federal Communications Commission.

ACTION: Final rule.

SUMMARY: In this document the Commission modifies its rules and procedures for allocating and licensing ''non-reserved'' broadcast spectrum where conflicting uses are proposed by commercial and noncommercial educational broadcast stations. The Commission received several comments in how to resolve solutions. These methods were established to select among competing noncommercial and commercial applicants.

DATES: Effective June 16, 2003.

FOR FURTHER INFORMATION CONTACT: Eric J. Bash (202) 418–1188 or *ebash@fcc.gov,* Peter Corea (202) 418–7931 or *pcorea@fcc.gov,* Media Bureau, Policy Division.

SUPPLEMENTARY INFORMATION: This is a summary of the Media Bureau's *Second Report and Order (''2R&O'')* in MM Docket No. 95–31; FCC 03–44, adopted March 4, 2003, and released on April 10, 2003. The full text of this *2R&O* is available for inspection and copying during regular business hours in the FCC Reference Center, 445 Twelfth Street, SW., Room CY—-A257, Portals II, Washington, DC 20554, and may also be purchased from the Commission's copy contractor, Qualex International, Room CY—B402, telephone (202) 863–2893, or via e-mail *qualexint@aol.com.* This document is also available to persons with disabilities requiring accessible formats (electronic ASCII text, Braille, large print, and audiocassette) by contacting Brian Millin at (202) 418–7426 (voice), (202) 418–7365 (TTY), or by sending an e-mail to *access@fcc.gov.*

Synopsis of Second Report and Order

I. Introduction

1. In this *2R&O,* we establish new policies for licensing spectrum that the Commission has not reserved for the exclusive use of broadcast stations that provide or intend to provide noncommercial educational (''NCE'') service. In developing our new policies and procedures, we are constrained by a number of court decisions, regulations, and statutory provisions that, taken together, limit our options. We have come to the following conclusions. First, those stations that a nonprofit educational organization shows will be used to advance an educational program are eligible to be licensed as NCE radio or television stations and thus are exempt from auction. Nonprofit educational organizations that do not make such a showing must compete at auction for licenses. Second, we will not hold applicants for NCE stations ineligible to apply for non-reserved channels, and instead will permit such applicants to continue to apply for this spectrum in filing windows. Any applications for NCE stations determined to be mutually exclusive with applications for commercial stations will be dismissed, although applicants for services in which engineering solutions are possible will have a prior opportunity for settlement. Third, we reaffirm our existing relaxed reservation criteria, which enable would-be applicants for NCE stations in the full-power FM and TV services to add to the number of channels reserved for their use when they demonstrate that they are technically precluded from using an already-reserved channel, and they will provide needed NCE service in a given area. Interested parties may use these criteria to reserve channels in future allocation proceedings, as well as to reserve channels already in the Table of Allotments for which the Commission initiated an allocation proceeding prior to the August 7, 2000 effective date of the relaxed reservation standards, and for which the Commission has never accepted applications. Interested parties may not use these criteria to reserve channels already in the Table for which the Commission initiated an allocation rulemaking after August 7, 2000, or channels for which the Commission has already accepted applications.

II. Background

2. The Commission licenses NCE stations on channels reserved for their exclusive use and also on other broadcast spectrum. In the FM service, the Commission has reserved twenty specific channels out of a total of one hundred channels, exclusively for full-power FM and FM translator use by NCE stations. In the television service, the Commission has reserved a similar proportion of channels, but using different channels in the Table of Allotments in different geographic areas across the country. The Commission has not reserved any particular frequencies for exclusive use in the AM service, or secondary TV services, such as low power television (LPTV) and TV translators.

3. The Commission initiated this proceeding in 1995 to revise the criteria it used to select among competing applicants for new NCE stations. In the past, the Commission had used

comparative criteria to resolve mutually exclusive applications in both the commercial and NCE services, although the criteria were different for reserved and non-reserved spectrum. NCE applicants competing against commercial applicants for a non-reserved channel were evaluated using the commercial criteria. Both comparative processes, however, were called into question in the 1990s, leading the Commission to revisit its comparative criteria for applicants for both commercial and NCE stations. The Commission has adopted new selection criteria for NCE stations.

4. The Balanced Budget Act of 1997 (''1997 Budget Act'') amended certain provisions of the Communications Act (''Act'') germane to the Commission's ongoing review of its licensing processes. The 1997 Budget Act amended section 309(j) of the Act. As revised, section 309(j)(1) states: ''If * * * mutually exclusive applications are accepted for any initial licenses or construction permits, then, except as provided in paragraph (2), the Commission shall grant the license or permit to a qualified applicant through a system of competitive bidding that meets the requirements of this subsection.'' Section 309(j)(2) sets forth the limited exceptions to section 309(j)(1), including ''licenses or construction permits issued by the Commission * * * (C) for stations described in section 397(6) of this Act.'' Section 397(6) of the Act provides the definition of NCE stations.

5. Given the different licensing mechanisms for NCE stations and all other stations, the Commission issued a *Further Notice of Proposed Rulemaking (''FNPRM''),* 63 FR 58358, October 30, 1998, in this docket and sought comment on how to resolve conflicts between commercial and NCE applicants for non-reserved spectrum. The Commission also sought comment on whether section 309 of the Act prohibited it from using competitive bidding to resolve any mutually exclusive applications when they included at least one filed by an applicant for an NCE station, or instead only when they involved competing applications for reserved channels.

6. In the *Report and Order (''R&O''),* 65 FR 36375, June 8, 2000, the Commission concluded that ''the exemption of NCE applicants from our general mandatory auction authority does not prohibit us from auctioning non-reserved spectrum, even when NCE entities apply for those channels.'' The Commission decided to require applicants for NCE stations to compete with applicants for commercial stations for non-reserved spectrum at auction. In order to minimize any hardship on applicants for NCE stations, the Commission also relaxed the criteria used to evaluate requests to reserve new channels.

7. The Association of Public Television Stations, the Corporation for Public Broadcasting, National Public Radio, and the State of Oregon challenged the Commission's decision in court. In *NPR* v. *FCC,* 254 F.3d 226 (DC Cir. 2001), the U.S. Court of Appeals for the D.C. Circuit rejected the Commission's construction of section 309. The court held that ''nothing in the Act authorizes the Commission to hold auctions for licenses issued to NCEs to operate in the unreserved spectrum,'' because section 309(j)(2) denied the Commission the authority to use competitive bidding ''based on the nature of the station that ultimately receives the license, and not on the part of the spectrum in which the station operates.'' 254 F.3d at 229.

8. In order to resolve the issues raised by the court's decision, we issued a *Second Further Notice of Proposed Rulemaking (2FNPRM),* 67 FR 9945, March 5, 2002. We asked for comment on the scope of the auction exemption, and offered three options, not necessarily mutually exclusive, on how to resolve the competing interests of applicants for commercial and NCE stations in the non-reserved spectrum. First, we proposed to hold applicants for NCE stations ineligible for this spectrum, stating that such an approach ''is consistent with the statutory language'' and ''has the advantage of clarity and simplicity.'' Second, recognizing that, under our first proposal, spectrum might lie fallow if no commercial applicants applied to use it, we proposed to permit applicants for NCE stations to apply for non-reserved spectrum, subject to dismissal of their applications if they were mutually exclusive with those filed by commercial applicants. Third, given that applicants for NCE stations may not legally participate in auctions, we also sought comment on whether we should further relax the criteria for would-be applicants for NCE stations to reserve additional channels in the future, and whether we should permit NCE applicants the opportunity to apply such criteria, or other criteria, to reserve existing or ''vacant'' allotments. We also welcomed comment on other options.

III. Discussion

A. Scope of Exemption for NCE Stations From Competitive Bidding

1. Generally

9. *Background.* In the *2FNPRM,* we sought comment on the breadth of section 309(j)(2)(C), which exempts NCE stations from competitive bidding. As indicated, that section exempts the licenses issued ''for stations described in section 397(6) of this Act.'' Subsection (A) defines ''noncommercial educational broadcast station'' by incorporation of the Commission's eligibility rules for such stations in effect in 1978. Subsection (B) defines as NCE stations those that are municipality-owned and transmit only noncommercial programs for educational purposes.

10. *Discussion.* We conclude that the auction exemption for NCE stations applies to two types of broadcast stations: (1) AM, full-power FM, FM translator, and full-power TV stations that a nonprofit educational organization shows will be used to advance an educational program, and are eligible to be licensed as NCE stations pursuant to the Commission's service-specific standards, in effect as of November 1978; and (2) stations that will be used by a municipality to transmit only noncommercial programs for educational purposes. Section 309(j)(2)(C) states that ''(t)he competitive bidding authority granted by this paragraph shall not apply to licenses or construction permits issued by the Commission * * * (C) for stations described in section 397(6) of this Act.'' Section 397(6), in turn, states that ''(t)he terms 'noncommercial educational broadcast station' and 'public broadcast station' mean a television or radio broadcast station which (A) under the rules and regulations of the Commission in effect on the effective date of this paragraph, is eligible to be licensed by the Commission as a noncommercial educational radio or television broadcast station and which is owned and operated by a public agency or nonprofit private foundation, corporation, or association; or (B) is owned and operated by a municipality and which transmits only noncommercial programs for education purposes.'' Defining stations within the scope of section 397(6)(A) must begin with the content of our eligibility rules as of November 2, 1978, because that is the date section 397(6) became effective. The substance of the eligibility rules for NCE stations has not changed since that time. Section 73.503(a) of the

Commission rules set forth the current eligibility rule for FM stations: ''A noncommercial educational FM broadcast station will be licensed only to a nonprofit educational organization and upon showing that the station will be used for the advancement of an educational program.'' Section 73.621(a) of the rules sets forth the current eligibility rule for TV stations: ''(N)oncommercial educational broadcast stations will be licensed only to nonprofit educational organizations upon showing that the proposed stations will be used primarily to serve the educational needs of the community; for the advancement of educational programs; and to furnish a nonprofit and noncommercial television broadcast service.'' Weaving together these various regulatory and statutory provisions, in the manner the Act instructs, under section 397(6)(A), an NCE station is either an FM or TV station that is licensed to a nonprofit educational organization that shows that the station will be used to advance an educational program. A TV station must also show that the station will be used to furnish a nonprofit and noncommercial service that will serve the educational needs of its community. The Commission has also licensed AM stations that satisfy the FM station eligibility rules, as well as FM translators that rebroadcast the signals of an NCE FM station, as NCE stations, and has done so both before and since the November 1978 effective date of section 397(6). In terms of paragraph 397(6)(B), an NCE station is also any station that is owned and operated by a municipality and transmits only noncommercial programs for educational purposes, regardless of the Commission's eligibility rules. We conclude that applicants are exempt from auctions, pursuant to section 309(j)(2)(C), only when they file applications for broadcast stations expressly defined by sections 397(6)(A) and 397(6)(B).

11. This construction of the governing legal standards for NCE stations is consistent with our current practice. The Commission has long licensed nonprofit educational organizations, such as universities, to provide commercial service on non-reserved channels. When licensed to operate commercial broadcast stations, these nonprofit educational organizations are subject to the requirements applicable to all commercial stations. For example, they must pay filing fees; by contrast, fees are not required with respect to any station that a nonprofit educational organization is licensed to operate as an NCE station.

2. LPTV and TV Translators

12. *Background.* We also sought comment on the applicability of the auction exemption in section 309(j)(2)(C) to LTPV and TV translator stations specifically. The Commission does not now issue, and has never issued, licenses for NCE stations in these services. As a result, we asked whether the auction exemption extends to applicants for LPTV and TV translator licenses that could qualify as applicants for NCE stations in other services. If the fact that we have not licensed LPTV and TV translator facilities as NCE stations in the past means that applicants must compete for these license at auction, we asked whether, and if so how, we should create an NCE LPTV and TV service. Even if we took such action, we sought comment on whether it would have any impact on the auctions exemption, given that section 397(6)(A) of the Act defines NCE stations in terms of our eligibility rules as they existed on November 2, 1978.

Discussion. We conclude that no licenses for LPTV and TV translator facilities fall within the scope of section 397(6)(A), and that adopting new NCE eligibility criteria for these services would not bring applicants for such services within the scope of the auction exemption. LPTV and TV translator facilities, however, qualify as NCE stations under section 397(6)(B) of the Act, if they are owned and operated by municipalities and transmit only NCE programs. This definition does not turn on our eligibility rules, and so applicants of the latter type are exempt from auction.

13. Section 397(6)(A) of the Act defines the NCE stations that are exempt from auction in terms of the Commission's eligibility rules in effect on November 2, 1978. We did not license LPTV and TV translator facilities as NCE stations as of that date. Indeed, the Commission did not create the LPTV service until 1982, and at that time expressly rejected the approach of licensing these facilities as NCE stations. With respect to the LPTV service, the Commission stated that

> Whether a low power applicant or licensee is noncommercial or not-for-profit is a decision properly made by the licensee on the basis of applicable corporate and tax law, pertinent requirements of the Corporation for Public Broadcasting and perceived characteristics of the market in which it proposes to operate. Section 73.621 of the Commission rules (the eligibility and programming rules regarding NCE TV stations) will not apply to lower power stations.

The same applies to TV translators, because LPTV and TV translators are virtually the same; the difference between the two is that LPTV licenses can originate more programming than TV translator licensees, but licensees can switch between the two through simple letter notification to the Commission. Although we have exempted LPTV and TV translator licensees from administrative fees on certain conditions, we do not license these facilities as NCE stations, with the result that the programming and service requirements for NCE stations do not apply. Given that we do not license LPTV and TV translator facilities as NCE stations, and did not do so as of the effective date of section 397(6), these stations (other than those defined in section 397(6)(B)) do not fall within the scope of section 309(j)(2)(C).

14. Section 397(6)(B) defines an NCE station as one that ''is owned and operated by a municipality and which transmits only noncommercial programs for education purposes.'' This definition does not incorporate the Commission's eligibility rules for NCE stations. LPTV and TV translator stations that are owned and operated by municipalities and transmit only noncommercial programming for educational purposes are exempt from auction under section 309(j)(2)(C).

B. Licensing of Non-Reserved Spectrum

15. *Background.* In the *2FNPRM,* we offered two different proposals for licensing noncommercial educational applicants on non-reserved spectrum. As one option, we proposed to hold applicants for NCE station licenses simply ineligible for non-reserved spectrum. As an alternative, we proposed to accept applications for both commercial and NCE stations in the non-reserved spectrum, with the latter applications subject to dismissal if they were mutually exclusive with the former. We also asked whether we should amend the anti-collusion rule to permit mutually exclusive commercial and NCE applicants for AM stations a prior opportunity to resolve their conflicts through settlements.

16. *Discussion.* We adopt our proposal to allow applicants for NCE stations to submit applications for non-reserved spectrum in a filing window, subject to being returned as unacceptable for filing if there is any mutually exclusive application for a commercial station. We also will allow applicants for AM stations and secondary services a prior opportunity to resolve their mutually exclusive applications through

settlements. We prefer this approach to that of holding applicants for NCE stations ineligible to apply for non-reserved spectrum. These policies are designed to preserve opportunities for applicants for NCE broadcast stations to use non-reserved spectrum, consistent with section 309(j), as amended, and in a manner that will not unduly delay the initiation of any broadcast service to the public. We recognize that these opportunities are limited to those situations in which commercial applicants do not file mutually exclusive applications for the spectrum, and to certain services in which the applicants reach a settlement, but these situations can and do happen.

17. As a practical matter, and as is currently our practice, we will begin the licensing process for non-reserved spectrum by opening an auctions filing window. Applicants for NCE stations may submit applications in the window in the same way as commercial applicants, using FCC Form 175, the ''short-form'' application to participate in an auction. Applicants that seek an NCE station license must identify themselves by checking the box labeled ''noncommercial educational,'' which will serve as a preliminary showing that they intend to use the station to advance an educational program and that they meet all other Commission eligibility requirements for NCE stations. Applicants that do not check this box will be considered, as a matter of law, applicants for commercial broadcast stations. Because an applicant's self-identification as ''noncommercial educational'' affects its eligibility to hold an NCE station license and therefore its eligibility to participate in an auction, we will treat any applicant's attempt to change its self-identification as a major amendment, which is prohibited after the short-form application filing deadline. Applications for NCE stations that are mutually exclusive only with one another will not proceed to auction and instead will be resolved by the same point system selection procedures that we have established for the reserved band. Any application for an NCE station that is mutually exclusive with any application for a commercial broadcast station will, after any settlement opportunities expire, be returned as unacceptable for filing.

18. *Anti-Collusion Rule.* We adopt the approach outlined in the *2FNPRM* to amend our anti-collusion rule to permit mutually exclusive applicants for AM stations to settle, when the applicants include at least one for an NCE station. The anti-collusion rule generally prohibits applicants that have filed mutually exclusive applications from ''discussing or negotiating settlement agreements'' among themselves after the short-form filing deadline. The Commission, however, has carved out limited exceptions for certain applicant groups in the broadcast and Instructional Fixed Television (ITFS) services, namely those involving applications for major modifications that are mutually exclusive with one another or with applications for new stations, as well as those involving secondary services. The Commission created these exceptions based in part on the fact that it is possible for the applicants to devise engineering solutions to remove the technical conflicts between their applications.

19. As a consequence of the exception for secondary services, applicants for NCE stations in the LPTV and translator services already have the opportunity to resolve their mutually exclusivity applications. Applicants for new AM stations also have the opportunity to settle when their applications are mutually exclusive with those for major modifications. We believe it will serve the public interest if we expand the settlement opportunity to applicants for new AM stations that are mutually exclusive with one another, when at least one of them is an applicant for an NCE station. Given the limited number of opportunities for any new stations using AM frequencies, this expansion to the groups that qualify for settlement is incremental. This is buttressed by the fact that we limit the groups of AM applicants eligible to enter into settlements to only those that include applicants for both commercial and NCE stations. We do not believe that extending settlement opportunities to applicants for NCE stations is particularly likely to compromise the purpose of the anti-collusion rule, which is to enhance the competitiveness of the auction process, given that these applicants will never compete at auction for the licenses for which they have applied. As a result, mixed groups of applicants for AM stations will have the opportunity to design engineering solutions or reach other settlements, which must conform to all requirements in our settlement process for broadcast applicants. Because we only accept applications for non-reserved full-power FM and full-power TV channels that are already in the Table of Allotments, it is not possible for applicants that file mutually exclusive applications for such channels to resolve their conflicts through engineering means; as a result, we will not extend a similar settlement opportunity to them.

C. Allocating Spectrum

20. *Background.* In the *R&O* in this proceeding, the Commission decided to allocate a channel as reserved if a proponent demonstrated: For radio, that it is technically precluded from using a reserved channel and would provide a first or second NCE radio service to 10% of the population within its 1mV/m contour, and for television, that there is no reserved channel available in the proponent's community and it would provide the first or second NCE television service to 2000 or more people who constitute 10% of the population within its noise limited contour. The Commission adopted these standards for use at the allocation stage of the licensing process, and thus expressly declined to extend them to existing (vacant) allotments, pending applications, and services such as AM that do not use an allocations process. In the *2FNPRM,* we asked whether we should further relax the reservation standards, and if so what the standard should be. We also asked whether we should establish opportunities for interested parties to reserve existing allotments that we have not yet licensed (*i.e.*, ''vacant'' allotments), and if so what the standards should be.

21. *Discussion.* We reaffirm the relaxed reservation standard that the Commission adopted in the *R&O* in this proceeding. We will permit the use of these criteria to reserve channels not only in future allocation proceedings, but also in allocation proceedings that the Commission initiated prior to its adoption of the relaxed reservation standard. We believe these policies best satisfy the public interest, and are the fairest to all parties concerned.

22. *Future Allocations.* The Commission already has reserved twenty (201–220) out of a total of one hundred FM channels for the exclusive use of NCE stations, and will reserve any of the remaining eighty channels (221–300) for NCE stations if one of three tests is satisfied. The Commission's original purpose in reserving a band of channels was simply to ensure that NCE stations would develop; when establishing the FM and TV services, the Commission was concerned that commercial stations, due to their financial advantage, would make such immediate use of the spectrum for these services that none would remain available for NCE stations when they were prepared to make use of it. In order to ensure that NCE stations could in fact make use of the reserved band of channels, the Commission adopted two tests for reserving channels outside this band;

the Commission will allocate a new FM channel as reserved if a would-be applicant for an NCE station can show that it cannot use another reserved channel to provide its service without causing interference to either a foreign station or a domestic TV station operating on channel 6. Moreover, in order ''to mitigate any potential hardship that the auction process might impose on noncommercial entities,'' the Commission adopted a third test for reserving channels outside 201–220 in the *R&O* in this proceeding. Under this third standard, the Commission will allocate a new FM channel as reserved if a would-be applicant for an NCE station can show that it is technically precluded from using a reserved channel, and that it will provide a first or second NCE service to 10% of the population within its proposed protected service contour. Since the Commission further relaxed the standard, several parties have asked the Commission to allocate a particular FM channel as reserved pursuant to the relaxed reservation standards, and we have done so.

23. Our third test thus requires a proponent for reservation to demonstrate that NCE service is needed in their proposed service area (by showing that they will provide the first or second NCE service within some portion of their proposed service contour), and to show that they are ''technically precluded'' from using a reserved channel. NCE service is not technically precluded if it is possible to specify a location at which same-class reserved band NCE facilities could be licensed to the proposed community in compliance with NCE technical rules. A reservation proponent must satisfy two criteria: First, that class-maximum facilities at the allotment reference site would provide a new first or second NCE service to ten percent or more of the population in a station's service area; and second, that a same-class reserved band facility that would provide the requisite level of new NCE service is—to a reasonable degree of certitude—technically precluded.

24. In order to expedite new service and minimize burdens to prospective NCE applicants, we will use the following methodology to evaluate allotment reservation requests. A reservation showing must satisfy two distinct criteria. First, it must establish the relative need for a new NCE service by demonstrating that maximum class facilities at the proposed allotment site would provide a first or second NCE service to at least ten percent of the population within the proposed station's service area and that such population is at least 2000 persons. The Commission will not reserve a particular allotment if this ''first or second service'' criterion is not satisfied at the allotment site's reference coordinates.

25. Secondly, a reservation request must include a technical preclusion showing. The following test is designed to provide a reliable and efficient proxy of technical preclusion. It is not a conclusive test, but one that the Commission will treat as establishing a rebuttable presumption of technical preclusion. The showing will be based on a circle, centered in the proposed community of license and drawn with a radius one kilometer less than the distance to the predicted 60 dBu strength signal of a maximum same-class facility. The reservation showing must establish that no rule-compliant facility can be authorized at maximum antenna height above average terrain (''HAAT'') and with maximum effective radiated power (''ERP'') on any reserved band channel at four equally-spaced locations on the circle, beginning with 0 (zero) degrees. In addition, the reservation showing must establish that no same-class rule-compliant facility can be authorized at minimum antenna HAAT and with minimum ERP on any reserved band channel at the city center coordinates for the community of license. If these two criteria are satisfied, the reservation proponent has presumptively established that the allotment should be reserved, *i.e.*, that a nonreserved band FM station licensed to the proposed community with the proposed class facilities is technically precluded from providing service on a reserved band channel.

26. In the event that an NCE station can be licensed on one or more channels at any of these five sites in compliance with the NCE technical rules, the reservation showing must undertake a ''first or second service'' analysis of the technically acceptable facilities at each acceptable site. If any analyzed facility would satisfy the ''first or second service'' criterion, the allotment will not be reserved. If none of the identified channel/site combinations satisfy the ''first or second service'' criterion, then the reservation proponent has presumptively established that the allotment should be reserved.

27. A reservation showing will be conclusively rebutted if a party that desires a non-reserved allotment can both identify a single location from which a facility with a class-permissible power/height combination can be authorized in compliance with the rules, and show, with respect to that location, that the specified facilities would satisfy the ''first or second service'' criterion. If no acceptable rebuttal showing is submitted, the allotment generally will be reserved. The staff may reject reservation showings if it determines that technically acceptable reserved band facilities can be licensed to the particular community, provided that such facilities meet the ''first or second service'' criterion.

28. We also clarify that a reservation request, accompanied with a complete technical preclusion showing, may be submitted as an original petition for rulemaking or as a timely counterproposal. If a reservation request is filed as a counterproposal and specifies the same community as the initial petition, the station class and allotment coordinates set forth in the initial petition would be used to determine technical preclusion. Conflicts between mutually exclusive allotments for different communities when a party has made the two-part reservation showing with respect to one community will be resolved under established Section 307(b) precedent. Reserved allotments will be conditioned on the construction and licensing of an NCE station that provides the requisite level of first and second NCE service. In the event that all applications for a reserved band allotment fail to propose such service, the allotment will become unreserved by operation of law and subject to the Commission's competitive bidding licensing procedures.

29. *Vacant Allotments.* We will authorize entities to use the relaxed reservation standards that we reaffirm today not only for future allocations, but also for FM channels for which we initiated an allocation proceeding before the effective date of these standards, August 7, 2000, and for which we never opened a filing window to accept applications. There are approximately 450 such FM channels, including approximately 350 that were previously scheduled for auction. In determining whether to reevaluate the status of an FM channel that already has been the subject of an allocation rulemaking proceeding, we believe that the public interest requires us to weigh the delay in the introduction of new FM service to the public that would be associated with such a review, against the public interest benefits of additional review, and fairness to all interested parties. For FM channels for which Commission initiated an allocation proceeding before August 7, 2000, and for which it has no applications on file, we believe that the balance of these concerns favors further review. On the one hand is delay, as some commenters indicate, as well as

unfairness to the proponents of these channels, each of which petitioned the Commission to allocate the channel, and has affirmatively expressed an interest in filing an application and competing for the channel at auction. On the other hand, proponents of channels have no ''finder's preference'' for them, and entities that wish to use these FM channels to operate NCE stations have not had meaningful opportunities to acquire the licenses for them. This is because these entities never had opportunities to reserve these channels using our relaxed reservation standards, and although we will still permit them to apply for these channels, their applications will be returned as soon as they become mutually exclusive with those for commercial stations. Allowing entities that wish to use these FM channels to operate NCE stations an opportunity to reserve them also ensures that we will allocate them as reserved or non-reserved according to whether there is a greater need for commercial or NCE service, as determined by our relaxed reservation standards, such that the delay of service occasioned by our further review of the nature of the channel is offset by the public interest benefit of more diverse service. Thus, on balance, we believe that the public interest is best served by allowing interested parties an opportunity to reserve FM channels using the standards that were not previously available to them. As a result, we will direct the staff to open a short window in the near future, during which interested parties may attempt to reserve any FM channel for which we initiated an allocation rulemaking before August 7, 2000, using the standards that became effective that day and that we reaffirm and clarify here. Interested parties objecting to any proffered reservation showing we receive may of course file opposing pleadings. We will release a Public Notice containing the details of our procedures for reserving vacant allotments in advance of the window.

30. We will not allow interested parties to use the relaxed reservation standards for any FM channel for which we initiated an allocation rulemaking after August 7, 2000. We believe the cost-benefit analysis associated with opening these rulemakings is different. The relaxed reservation standards were available to reserve any of these channels. Indeed, several parties have reserved allotments using the Commission's new standards. We do not believe it would serve the public interest to introduce additional delay to offer would-be applicants for NCE stations yet another opportunity to attempt to reserve these channels using the criteria that have already been available to them.

31. *Pending Applications.* Consistent with our conclusion not to open these newer vacant allotments to reconsider reserving the channels, we also reaffirm the decision in then *R&O* in this proceeding not to permit applicants for NCE stations in pending mixed groups a further opportunity to reserve the channels for which they have applied. At the time of the 2FNPRM, a total of forty mixed groups were pending. We offered these groups an opportunity to settle, and many took advantage of that opportunity, with the result that approximately twenty groups remain. The channels at issue here are altogether different from the allotments discussed because they have advanced to a farther point in our licensing process: the Commission opened a filing window for some of these channels nearly ten years ago, already had long-form applications on file for them, and in fact had originally scheduled to award the licenses by auction in 1999. As a result, when compared to the allotments for which we never opened a filing window, further review of the channels associated with the pending applications would cause even greater delay in our licensing process and the introduction of broadcast service, and also would cause greater unfairness to applicants for commercial stations, because all interested parties have spent the time and money necessary to complete all of the engineering and legal components of a long-form application. Particularly given that we have already offered settlement opportunities to all applicants in these pending cases, we are not persuaded that the equities favoring the applicants for NCE stations in these pending proceedings outweigh the delay in initiating new broadcast service to the public as well as the unfairness to applicants for commercial stations. As a result, we believe that it will serve the public interest best to return as unacceptable for filing the pending applications for NCE stations, and move the process forward by subjecting any remaining mutually exclusive applications to auction. This auction will be closed; we will not open a new filing window. Prior to auction, we will not review these applicants' long-form applications already on file, nor will we accept amendments to these forms. If only one commercial application remains after the return of all mutually exclusive NCE applications, we will process that applicant's pending long-form application in accordance with our applicable rules. This approach will end the administrative delay in processing these applications, and will result in licensing new broadcast facilities to serve the public more quickly.

32. Other Allocation Issues. NPR, with the support of a few other commenters, asked us to reallocate TV channel 6 for NCE radio use. A number of NCE TV licensees, however, stated that this issue is outside the scope of this proceeding. We agree, and decline to adopt NPR's proposal. We also conclude that Amherst Alliance's request that we expand the reserved band, and limit eligibility to the expanded reserved particular types of NCE stations, is likewise outside the scope of this proceeding.

IV. Conclusion

33. This proceeding has required us to undertake the difficult task of deciding how to resolve the competing interests of applicants for commercial and NCE stations for non-reserved spectrum. We have attempted to create and maintain opportunities for applicants for NCE stations insofar as possible, consistent with the applicable legal standards, and fairness toward applicants for commercial stations. Our resolution of these issues will now enable the Commission to move forward quickly with licensing non-reserved spectrum, so that the ultimate licensees may provide service to the public.

V. Final Regulatory Flexibility Analysis

34. As required by the Regulatory Flexibility Act of 1980, as amended (''RFA''), an Initial Regulatory Flexibility Analysis (''IRFA'') was incorporated in the *2FNPRM* in this docket. The Commission sought written public comment on the proposals in the *2FNPRM*, including comment on the IRFA. No comments addressed the IRFA. This present Final Regulatory Flexibility Analysis (''FRFA'') conforms to the RFA.

Need for, and Objectives of, the Second Report and Order

35. The Commission adopts the *2R&O* to establish new policies for licensing spectrum that the Commission has not specifically reserved for the exclusive use of noncommercial educational (''NCE'') broadcast stations. In the *R&O* in this docket, the Commission decided to resolve competing applications for commercial and NCE stations in this ''non-reserved'' spectrum via competitive bidding, but the U.S. Court of Appeals for the D.C. Circuit overturned that result. In the *2FNPRM* in this docket, the Commission sought

comment on how to allocate and license this spectrum, consistent with the court's opinion and the Communications Act. The *2R&O* resolves the issues we raised in the *2FNPRM.*

Summary of Significant Issues Raised by the Public in Responses to the IRFA

36. No comments addressed the IRFA, or otherwise discussed issues that may impact small entities.

Description and Estimate of the Number of Small Entities to Which the Rules Will Apply

37. The RFA directs the Commission to provide a description of, and, where feasible, an estimate of the number of small entities that will be affected by the rules. The RFA defines the term ''small entity'' as having the same meaning as ''small business,'' ''small organization,'' and ''small governmental jurisdiction.'' In addition, the term ''small business'' has the same meaning as the term ''small business concern'' under the Small Business Act. A ''small business concern'' is one that: (1) Is independently owned and operated; (2) is not dominant in its field of operation; and (3) satisfies any additional criteria established by the SBA. A ''small organization'' is generally defined as ''any not-for-profit enterprise which is independently owned and operated and is not dominant in its field * * *.'' A ''small governmental jurisdiction'' is generally defined as ''governments of cities, counties, towns, townships, villages, school districts, or special districts, with a population of less than fifty thousand * * *.''

38. The rules adopted in the *2R&O* will affect applicants for NCE stations on non-reserved channels and frequencies. Under the applicable provisions of the Act, NCE stations are those owned and operated by: (1) Nonprofit educational organizations after showing that they will use the stations to advance educational programs, or (2) municipalities that use the stations to air only noncommercial programs for educational purposes. The rules could also affect commercial stations by causing delay in processing their applications; although the new rules establish that applications for NCE stations will be returned as unacceptable for filing if they become and remain mutually exclusive with applications for commercial stations, the rules continue to permit applicants for NCE stations to apply for non-reserved channels, and in some services, the opportunity to negotiate a settlement with a competing applicant for a commercial station. In addition, our new policies may cause some delay to applicants for commercial stations, whether large or small, that seek to use certain vacant allotments; although as a general matter we will allow applicants for NCE stations to attempt to reserve channels only when we are conducting an allocation proceeding to amend the Table of Allotments, we will permit applicants for NCE stations an opportunity to reserve channels for which we have already concluded the allocation proceeding, if the Commission initiated the proceeding before August 7, 2000, and never accepted applications for the channel. Thus, the rules may affect ''small business concerns,'' ''small organizations,'' and ''small governmental jurisdictions.'' The number of possible future applicants cannot be determined.

39. *Radio.* Applicants could also include existing radio stations. As of June 30, 2002, the Commission had licensed a total of 13,261 radio stations, of which 4,811 were AM stations, 6,147 were commercial FM stations, and 2,303 were NCE FM stations. As of the same date, the Commission had also licensed 3,770 FM translator and booster stations (commercial and NCE). SBA defines as a small business those radio broadcasting stations that have no more than $6 million in annual receipts. According to Commission staff review of BIA Publications, Inc. Master Access Radio Analyzer Database on August 22, 2002, about 10,800 commercial radio stations have revenue of $6 million or less. Many commercial radio stations, however, are affiliated with larger corporations with higher revenue, with the result that the estimate of 10,800 commercial radio stations overstates the number that qualify as small entities. The Commission does not compile and otherwise does not have access to information on the revenue of NCE stations that would permit it to determine how many such stations would qualify as small entities.

40. *Television.* Applicants could also include TV stations. As of June 30, 2002, the Commission had licensed a total of 1,712 full-power TV stations, of which 1,331 commercial TV stations, were 381 were NCE TV stations. As of the same date, the Commission had licensed 4,741 TV translator stations, 2,120 LPTV stations, and 554 Class A TV stations. SBA defines a television broadcasting station that has no more than $12 million in annual receipts as a small business. According to Commission staff review of the BIA Publications, Inc. Master Access Television Analyzer Database on August 22, 2002, about 870 of the commercial TV stations have revenues of $12 million or less. Many commercial TV stations, however, are affiliated with larger corporations with higher revenue, with the result that the estimate of 870 commercial TV stations overstates the number that qualify as small entities. The Commission does not compile and otherwise does not have access to information on the revenue of NCE stations that would permit it to determine how many such stations would qualify as small entities.

Description of Projected Reporting, Recordkeeping, and Other Compliance Requirements

41. The Commission anticipates that none of the rules adopted in the *2R&O* will result in an increase in the existing reporting and recordkeeping requirements of potential applicants.

Steps Taken To Minimize Significant Economic Impact on Small Entities, and Significant Alternatives Considered

42. The RFA requires an agency to describe any significant alternatives that it has considered in adopting its rules, which may include the following four alternatives (among others): (1) The establishment of differing compliance or reporting requirements or timetables that take into account the resources available to small entities; (2) the clarification, consolidation, or simplification of compliance or reporting requirements under the rule for small entities; (3) the use of performance, rather than design, standards; and (4) an exemption from coverage of the rule, or any part thereof, for small entities.

43. The *2R&O* establishes new policies for licensing non-reserved spectrum, in a manner consistent with the court's decision in the *NPR* case, and the applicable provisions of the statute. As explained in detail in the *2R&O,* section 309(j)(1) of the Act generally requires the Commission to resolve mutually exclusive applications for licenses to use spectrum via competitive bidding, but section 309(j)(2)(C) exempts the licenses for NCE stations from this process. In the *R&O* in this docket, the Commission concluded that the auction exemption applied only to licenses for NCE stations to use the channels that Commission has reserved for their exclusive use, and that applicants for licenses for NCE stations to use non-reserved spectrum must compete for them via competitive bidding; in the *NPR* case, the D.C. Circuit decided that the auction exemption extended to licenses for NCE stations to use non-reserved spectrum. As a result, the Commission's new

policies and rules must distinguish between commercial station and NCE stations in terms of how it allocates and licenses this spectrum. Thus, the Commission cannot distinguish between ''small'' and ''non-small'' entities in applying the relevant statutory standards.

44. Although it is not necessarily true that more applicants for NCE stations would qualify as ''small entities'' than applicants for commercial stations, the Commission has attempted, within the applicable legal constraints, to maximize the opportunities for applicants for NCE stations to obtain licenses to use non-reserved spectrum, consistent with the mandate in section 604(a)(5) of the RFA that an agency consider alternatives to minimize significant economic impact on small entities. For example, in the *2FNPRM,* the Commission proposed two alternatives for licensing non-reserved spectrum: Hold applicants for NCE stations ineligible for the spectrum, or permit them to apply for this spectrum, subject to the Commission returning their applications as unacceptable for filing if any mutually exclusive applications for commercial stations remained after the expiration of any settlement period. In the *2R&O,* the Commission has adopted the second of these alternatives, which permits NCE stations to obtain licenses for non-reserved spectrum, while the first one did not. This alternative is equally beneficial to both large and small entities, because it permits all entities the opportunity to acquire licenses for non-reserved spectrum. Moreover, the Commission has also reaffirmed its process that permits would-be applicants for NCE stations, both large and small, to reserve more FM and TV channels for their exclusive use upon showing that an already-reserved channel is not available for use, and there is a need for NCE service in a given area. The Commission will allow interested parties an opportunity to apply these criteria to future allocation proceedings, and to channels already in the Table of Allotments for which the Commission initiated an allocation proceeding before the effective date of the criteria, and for which it never accepted applications.

Report to Congress

45. The Commission will send a copy of the *2R&O,* including this FRFA, in a report to be sent to Congress pursuant to the Congressional Review Act. In addition, the Commission will send a copy of the *2R&O,* including this FRFA, to the Chief Counsel for Advocacy of the Small Business Administration. A copy of the *2R&O* and this FRFA (or summaries thereof) will also be published in the **Federal Register**.

Ordering Clauses

46. Pursuant to the authority contained in sections 1, 2(a), 4(i), 303, 307, and 309 of the Communications Act, as amended, 47 U.S.C. 151, 152(a), 154(i), 303, 307, and 309 of this *2R&O* is *adopted,* and parts 73 and 74 of the Commission's rules are amended, effective June 16, 2003.

47. The Commission's Consumer and Governmental Affairs Bureau, Reference Information Center, *shall send* a copy of this *2R&O,* including the Final Regulatory Flexibility Analysis, to the Chief Counsel for Advocacy of the Small Business Administration.

48. This proceeding is *terminated.*

List of Subjects in 47 CFR Parts 73 and 74

Radio, Television.

Federal Communications Commission.

William F. Caton,

Deputy Secretary.

Rule Changes

■ For the reasons discussed in the preamble, the Federal Communications Commission amends 47 CFR parts 73 and 74 as follows:

PART 73—RADIO BROADCAST SERVICES

■ 1. The authority citation for part 73 continues to read as follows:

Authority: 47 U.S.C. 154, 303, 334 and 336.

■ 2. Section 73.3571 is amended by revising paragraphs (h)(1)(i), (h)(2)(i), and (h)(3) to read as follows:

§ 73.3571 Processing of AM broadcast station applications.

* * * * *

(h) * * *

(1)(i) The FCC will specify by Public Notice, pursuant to § 73.5002, a period for filing AM applications for a new station or for major modifications in the facilities of an authorized station. AM applications for new facilities or for major modifications, whether for commercial broadcast stations or noncommercial educational broadcast stations, as described in 47 U.S.C. 397(6), will be accepted only during these specified periods. Applications submitted prior to the appropriate filing period or ''window'' opening date identified in the Public Notice will be returned as premature. Applications submitted after the specified deadline will be dismissed with prejudice as untimely.

* * * * *

(2) * * *

(i) Identifying the short-form applications received during the window filing period which are found to be mutually exclusive, including any applications for noncommercial educational broadcast stations, as described in 47 U.S.C. 397(6), as well as the procedures the FCC will use to resolve the mutually exclusive applications;

* * * * *

(3) After the close of the filing window, the FCC will also release a Public Notice identifying any short-form applications received which are found to be non-mutually exclusive, including any applications for noncommercial educational broadcast stations, as described in 47 U.S.C. 397(6). All non-mutually exclusive applicants will be required to submit an appropriate long form application within 30 days of the Public Notice and, for applicants for commercial broadcast stations, pursuant to the provisions of § 73.5005(d). Non-mutually exclusive applications for commercial broadcast stations will be processed and the FCC will periodically release a Public Notice listing such non-mutually exclusive applications determined to be acceptable for filing and announcing a date by which petitions to deny must be filed in accordance with the provisions of §§ 73.5006 and 73.3584. Non-mutually exclusive applications for noncommercial educational broadcast stations, as described in 47 U.S.C. 397(6), will be processed and the FCC will periodically release a Public Notice listing such non-mutually exclusive applications determined to be acceptable for filing and announcing a date by which petitions to deny must be filed in accordance with the provisions of §§ 73.7004 and 73.3584. If the applicant is duly qualified, and upon examination, the FCC finds that the public interest, convenience and necessity will be served by the granting of the non-mutually exclusive long form application, the same will be granted.

* * * * *

■ 3. Section 73.3572 is amended by revising the section heading and paragraph (e) to read as follows:

§ 73.3572 Processing of TV broadcast, Class A TV broadcast, low power TV, TV translators, and TV booster applications.

* * * * *

(e) The FCC will specify by Public Notice a period for filing applications for a new non-reserved television, low power TV and TV translator stations or for major modifications in the facilities of such authorized stations, whether for

commercial broadcast stations or noncommercial educational broadcast stations, as described in 47 U.S.C. 397(6), and major modifications in the facilities of Class A TV stations.

* * * * *

■ 4. Section 73.3573 is amended by revising paragraphs (f)(2)(i), (f)(3)(i), and (f)(4) to read as follows:

§ 73.3573 Processing of FM broadcast station applications.

* * * * *

(f) * * *

(2)(i) The FCC will specify by Public Notice, pursuant to § 73.5002(a), a period for filing non-reserved band FM applications for a new station or for major modifications in the facilities of an authorized station. FM applications for new facilities or for major modifications, whether for commercial broadcast stations or noncommercial educational broadcast stations, as described in 47 U.S.C. 397(6), will be accepted only during the appropriate filing period or ''window.'' Applications submitted prior to the window opening date identified in the Public Notice will be returned as premature. Applications submitted after the specified deadline will be dismissed with prejudice as untimely.

* * * * *

(3) * * *

(i) Identifying the short-form applications received during the window filing period which are found to be mutually exclusive, including any applications for noncommercial educational broadcast stations, as described in 47 U.S.C. 397(6), as well as the procedures the FCC will use to resolve the mutually exclusive applications;

* * * * *

(4) If, after the close of the appropriate window filing period, a non-reserved FM allotment remains vacant, the window remains closed until the FCC, by Public Notice, specifies a subsequent period for filing non-reserved band FM applications for a new station or for major modifications in the facilities of an authorized station pursuant to paragraph (f)(2)(i) of this section. After the close of the filing window, the FCC will also release a Public Notice identifying the short-form applications which are found to be non-mutually exclusive, including any applications for noncommercial educational broadcast stations, as described in 47 U.S.C. 397(6). These non-mutually exclusive applicants will be required to submit the appropriate long-form application within 30 days of the Public Notice and, for applicants for commercial broadcast stations, pursuant to the provisions of § 73.5005(d). Non-mutually exclusive applications for commercial broadcast stations will be processed and the FCC will periodically release a Public Notice listing such non-mutually exclusive applications determined to be acceptable for filing and announcing a date by which petitions to deny must be filed in accordance with the provisions of §§ 73.5006 and 73.3584. Non-mutually exclusive applications for noncommercial educational broadcast stations, as described in 47 U.S.C. 397(6), will be processed and the FCC will periodically release a Public Notice listing such non-mutually exclusive applications determined to be acceptable for filing and announcing a date by which petitions to deny must be filed in accordance with the provisions of §§ 73.7004 and 73.3584. If the applicant is duly qualified, and upon examination, the FCC finds that the public interest, convenience, and necessity will be served by the granting of the non-mutually exclusive long-form application, it will be granted.

* * * * *

Subpart I—Procedures for Competitive Bidding and for Applications for Noncommercial Educational Broadcast Stations on Non-Reserved Channels

■ 5. The heading in subpart I of part 73 is revised as set forth above.

■ 6. Section 73.5000 is amended by revising paragraph (b) to read as follows:

§ 73.5000 Services subject to competitive bidding.

* * * * *

(b) Mutually exclusive applications for broadcast channels in the reserved portion of the FM band (Channels 200–220) and for television broadcast channels reserved for noncommercial educational use are not subject to competitive bidding procedures. Applications for noncommercial educational broadcast stations, as described in 47 U.S.C. 397(6), on non-reserved channels also are not subject to competitive bidding procedures.

■ 7. Section 73.5002 is amended by revising the section heading and paragraphs (a), (b), (c) introductory text and adding paragraph (d)(4) to read as follows:

§ 73.5002 Application and certification procedures; return of mutually exclusive applications not subject to competitive bidding procedures; prohibition of collusion.

(a) Prior to any broadcast service or ITFS auction, the Commission will issue a public notice announcing the upcoming auction and specifying the period during which all applicants seeking to participate in an auction, and all applicants for noncommercial educational broadcast stations, as described in 47 U.S.C. 397(6), on non-reserved channels, must file their applications for new broadcast or ITFS facilities or for major changes to existing facilities. Broadcast service or ITFS applications for new facilities or for major modifications will be accepted only during these specified periods. This initial and other public notices will contain information about the completion and submission of applications to participate in the broadcast or ITFS auction, and applications for noncommercial educational broadcast stations, as described in 47 U.S.C. 397(6), on non-reserved channels, as well as any materials that must accompany the applications, and any filing fee that must accompany the applications or any upfront payments that will need to be submitted. Such public notices will also, in the event mutually exclusive applications are filed for broadcast construction permits or ITFS licenses that must be resolved through competitive bidding, contain information about the method of competitive bidding to be used and more detailed instructions on submitting bids and otherwise participating in the auction. In the event applications are submitted that are not mutually exclusive with any other application in the same service, or in the event that any applications that are submitted that had been mutually exclusive with other applications in the same service are resolved as a result of the dismissal or modification of any applications, the non-mutually exclusive applications will be identified by public notice and will not be subject to auction.

(b) To participate in broadcast service or ITFS auctions, or to apply for a noncommercial educational station, as described in 47 U.S.C. 397(6), on a non-reserved channel, all applicants must timely submit short-form applications (FCC Form 175), along with all required certifications, information and exhibits, pursuant to the provisions of § 1.2105(a) of this chapter and any Commission public notices. So determinations of mutual exclusivity for auction purposes can be made, applicants for non-table broadcast services or for ITFS must also submit the engineering data contained in the appropriate FCC form (FCC Form 301, FCC Form 346, FCC Form 349 or FCC Form 330). Beginning January 1,

1999, all short-form applications must be filed electronically. If any application for a noncommercial educational broadcast station, as described in 47 U.S.C. 397(6), is mutually exclusive with applications for commercial broadcast stations, and the applicants that have the opportunity to resolve the mutually exclusivity pursuant to paragraph (c) and (d) of this section fail to do so, the application for noncommercial educational broadcast station, as described in 47 U.S.C. 397(6), will be returned as unacceptable for filing, and the remaining applications for commercial broadcast stations will be processed in accordance with competitive bidding procedures.

(c) Applicants in all broadcast service or ITFS auctions, and applicants for noncommercial educational stations, as described in 47 U.S.C. 397(6), on non-reserved channels will be subject to the provisions of § 1.2105(b) of this chapter regarding the modification and dismissal of their short-form applications. Notwithstanding the general applicability of § 1.2105(b) of this chapter to broadcast and ITFS auctions, and applicants for noncommercial educational stations, as described in 47 U.S.C. 397(6), on non-reserved channels, the following applicants will be permitted to resolve their mutual exclusivities by making amendments to their engineering submissions following the filing of their short-form applications:

* * * * *

(d) * * *

(4) Applicants for the AM broadcast service who file applications that are mutually exclusive with at least one application for a noncommercial educational station, as defined in 47 U.S.C. 397(6).

■ 8. Section 73.5005 is amended by revising paragraph (d) to read as follows:

§ 73.5005 Filing of long-form applications.

* * * * *

(d) An applicant whose short-form application, submitted pursuant to § 73.5002(b), was not mutually exclusive with any other short-form application in the same service, or whose short-form application was mutually exclusive only with one or more short-form applications for a noncommercial educational broadcast station, as described in 47 U.S.C. 397(6), shall submit an appropriate long-form application within thirty (30) days following release of a public notice identifying any such non-mutually exclusive applicants. The long-form application should be submitted pursuant to the rules governing the relevant service and according to any procedures for filing such applications set out by public notice. The long-form application filed by a non-mutually exclusive applicant need not contain the additional exhibits, identified in paragraph (a) of this section, required to be submitted with the long-form applications filed by winning bidders. When electronic procedures become available, the Commission may require any non-mutually exclusive applicants to file their long-form applications electronically.

■ 9. Section 73.5006 is amended by revising paragraph (a) to read as follows:

§ 73.5006 Filing of petitions to deny against long-form applications.

(a) As set forth in 47 CFR 1.2108, petitions to deny may be filed against the long-form applications filed by winning bidders in broadcast service or ITFS auctions and against the long-form applications filed by applicants whose short-form applications were not mutually exclusive with any other applicant, or whose short-form applications were mutually exclusive only with one or more short-form applications for a noncommercial educational broadcast station, as described in 47 U.S.C. 397(6).

* * * * *

Subpart K—Application and Selection Procedures for Reserved Noncommercial Educational Channels, and for Certain Applications for Noncommercial Educational Stations on Non-Reserved Channels

■ 10. The heading in subpart K of part 73 is revised as set forth above.

■ 11. Section 73.7001 is amended by revising paragraph (b) and adding paragraph (c) to read as follows:

§ 73.7001 Services subject to evaluation by point system.

* * * * *

(b) A point system will be used to evaluate mutually exclusive applications for new radio, television, and FM translator facilities, and for major changes to existing facilities, on non-reserved channels, only when all of the mutually exclusive applications are for noncommercial educational broadcast stations, as described in 47 U.S.C. 397(6)(A) or 47 U.S.C. 397(6)(B).

(c) A point system will be used to evaluate mutually exclusive applications for new television translator and low power television facilities, and for major changes to existing facilities, only when all of the mutually exclusive applications are for noncommercial educational broadcast stations, as described in 47 U.S.C. 397(6)(B).

PART 74—EXPERIMENTAL RADIO, AUXILIARY, SPECIAL BROADCAST AND OTHER PROGRAM DISTRIBUTIONAL SERVICES

■ 11. The authority citation for part 74 continues to read as follows:

Authority: 47 U.S.C. 154, 303, 307, 336(f), 336(h) and 554.

■ 12. Section 74.1233 is amended by revising paragraphs (d)(2)(i), (d)(3)(i), (d)(4) to read as follows:

§ 74.1233 Processing FM translator and booster station applications.

* * * * *

(d) * * *

(2)(i) The FCC will specify by Public Notice, pursuant to § 73.5002(a) of this chapter, a period for filing non-reserved band FM translator applications for a new station or for major modifications in the facilities of an authorized station. FM translator applications for new facilities or for major modifications, whether for commercial broadcast stations or noncommercial educational broadcast stations, as described in 47 U.S.C. 397(6), will be accepted only during these specified periods. Applications submitted prior to the window opening date identified in the Public Notice will be returned as premature. Applications submitted after the specified deadline will be dismissed with prejudice as untimely.

* * * * *

(3) * * *

(i) Identifying the short-form applications received during the appropriate filing period or ''window'' which are found to be mutually exclusive, including any applications for noncommercial educational broadcast stations, as defined in 47 U.S.C. 397(6), as well as the procedures the FCC will use to resolve the mutually exclusive applications;

* * * * *

(4) After the close of the filing window, the FCC will also release a Public Notice identifying any short-form applications which are found to be non-mutually exclusive, including any applications for noncommercial educational broadcast stations, as described in 47 U.S.C. 397(6). These non-mutually exclusive applicants will be required to submit the appropriate long form application within 30 days of the Public Notice and, for applicants for commercial broadcast stations, pursuant to the provisions of § 73.5005 of this chapter. Non-mutually exclusive applications for commercial broadcast stations will be processed and the FCC

will periodically release a Public Notice listing such non-mutually exclusive applications determined to be acceptable for filing and announcing a date by which petitions to deny must be filed in accordance with the provisions of §§ 73.5006 and 73.3584 of this chapter. Non-mutually exclusive applications for noncommercial educational broadcast stations, as described by 47 U.S.C. 397(6), will be processed and the FCC will periodically release a Public Notice listing such non-mutually exclusive applications determined to be acceptable for filing and announcing a date by which petitions to deny must be filed in accordance with the provisions of §§ 73.7004 and 73.3584 of this chapter. If the applicants are duly qualified, and upon examination, the FCC finds that the public interest, convenience and necessity will be served by the granting of the non-mutually exclusive long-form application, the same will be granted.

* * * * *

[FR Doc. 03–12057 Filed 5–14–03; 8:45 am]

BILLING CODE 6712–01–P

DEPARTMENT OF COMMERCE

National Oceanic and Atmospheric Administration

50 CFR Parts 300, 600, and 679

[Docket No. 020801186 3073 02; I.D.053102D]

RIN 0648 AQ09

Pacific Halibut Fisheries; Subsistence Fishing; Correction

AGENCY: National Marine Fisheries Service (NMFS), National Oceanic and Atmospheric Administration (NOAA), Commerce.

ACTION: Final rule; correction.

SUMMARY: This document corrects the final rule that implemented the Pacific Halibut Subsistence Program, which published on April 15, 2003.

DATES: Effective on May 15, 2003.

FOR FURTHER INFORMATION CONTACT: Patsy A. Bearden, NMFS, 907–586–7228 or e-mail at *patsy.bearden@noaa.gov*.

SUPPLEMENTARY INFORMATION: This document corrects the final rule, which published on April 15, 2003 (68 FR 18145) FR Doc. 03–8822, and which will become effective on May 15, 2003. The intext table entitled VII. NORTH PACIFIC FISHERY MANAGEMENT COUNCIL of 50 CFR part 600.725(v) was incorrect. This action corrects the heading by removing ''Allowable gear types'' and by adding in its place ''Authorized gear types.'' This action will not have any substantive regulatory effect.

Classification

This action corrects a typographic error, a non-discretionary technical change with no substantive effects. Pursuant to 5 U.S.C. 553(b)(B), the Assistant Administrator of Fisheries (AA), NOAA, finds good cause to waive prior notice and comment procedures otherwise required by the section. NOAA finds that prior notice and comment are unnecessary as this final rule makes a minor, non-substantive change to correct wording in a heading of a table. NOAA finds that because of the technical, non-substantive nature of the correction, no particular public interest exists in this rule for which prior notice and comment would otherwise be needed. For the above reasons, the AA also finds good cause, under 5 U.S.C. 553(d) not to delay for 30 days the effective date of this action.

List of Subjects in 50 CFR Part 679

Alaska, Fisheries, Recordkeeping and reporting requirements.

Dated: May 8, 2003.

Rebecca Lent,

Deputy Assistant Administrator for Regulatory Programs, National Marine Fisheries Service.

PART 600—MAGNUSON-STEVENS ACT PROVISIONS

■ 1. The authority citation for part 600 continues to read as follows:

Authority: 5 U.S.C 561, 16 U.S.C. 773 *et seq.*, and 16 U.S.C. 1801 *et seq.*

■ 2. On page 18161, bottom of second column, in § 600.725, paragraph (v), correct table VII. NORTH PACIFIC FISHERY MANAGEMENT COUNCIL, by removing the second heading in the boxhead, ''Allowable gear types'', and adding in its place ''Authorized gear types''.

[FR Doc. 03–12040 Filed 5–14–03; 8:45 am]

BILLING CODE 3510–22–S

DEPARTMENT OF COMMERCE

National Oceanic and Atmospheric Administration

50 CFR Part 622

[Docket No. 030303053–3118–02; I.D. 022403C]

RIN 0648–AQ70

Fisheries of the Caribbean, Gulf of Mexico, and South Atlantic; Coastal Migratory Pelagic Resources of the Gulf of Mexico and South Atlantic; Reef Fish Fishery of the Gulf of Mexico; Revision of Charter Vessel and Headboat Permit Moratorium Eligibility Criterion

AGENCY: National Marine Fisheries Service (NMFS), National Oceanic and Atmospheric Administration (NOAA), Commerce.

ACTION: Final rule.

SUMMARY: NMFS issues this final rule to implement a corrected Amendment for the charter vessel/headboat permit moratorium established in Amendment 14 to the Fishery Management Plan for the Coastal Migratory Pelagic Resources of the Gulf of Mexico and South Atlantic (Amendment 14) and in Amendment 20 to the Fishery Management Plan for the Reef Fish Resources of the Gulf of Mexico (Amendment 20). This final rule revises, consistent with the actions taken by the Gulf of Mexico Fishery Management Council (Council), one of the eligibility criteria for obtaining a charter vessel/headboat permit under the moratorium. This final rule also reopens the application process for obtaining Gulf charter vessel/headboat moratorium permits and extends the applicable deadlines; extends the expiration dates of valid or renewable open access permits for these fisheries; clarifies, as requested by the Council, a constraint on issuance of historical captain permits under the moratorium; and extends the expiration date of the moratorium to account for the delay in implementation. In addition, NMFS informs the public of the approval by the Office of Management and Budget (OMB) of the collection-of-information requirements contained in this final rule and publishes the OMB control numbers for those collections. The intended effect of this final rule is to implement the charter vessel/headboat moratorium in the Gulf of Mexico consistent with the actions taken by the Council.

DATES: This final rule is effective June 16, 2003.

ADDRESSES: Copies of the final regulatory flexibility analysis (FRFA) may be obtained from the Southeast Regional Office, NMFS, 9721 Executive Center Drive N., St. Petersburg, FL 33702.

Comments on the collection-of-information requirements contained in this rule should be sent to Robert Sadler, Southeast Regional Office, NMFS, 9721 Executive Center Drive N., St. Petersburg, FL 33702, and to the Office of Information and Regulatory Affairs, Office of Management and Budget (OMB), Washington, DC 20503 (Attention: NOAA Desk Officer).

FOR FURTHER INFORMATION CONTACT: Phil Steele, telephone: 727–570–5305, fax: 727–570–5583, e-mail: Phil.Steele@noaa.gov.

SUPPLEMENTARY INFORMATION: The fishery for reef fish is managed under the Fishery Management Plan for the Reef Fish Resources of the Gulf of Mexico (Reef Fish FMP) that was prepared by the Council. The fisheries for coastal migratory pelagic resources are managed under the Fishery Management Plan for the Coastal Migratory Pelagic Resources of the Gulf of Mexico and South Atlantic (Coastal Migratory Pelagics FMP) that was prepared jointly by the Council and the South Atlantic Fishery Management Council. These FMPs were approved by NMFS and implemented under the authority of the Magnuson-Stevens Fishery Conservation and Management Act (Magnuson-Stevens Act) by regulations at 50 CFR part 622.

NMFS approved the corrected Amendment on May 6, 2003. NMFS published a proposed rule on March 12, 2003, to implement the corrected Amendment and requested comments on the proposed rule through March 27, 2003 (68 FR 11794, March 12, 2003). The rationale for the measures in the corrected Amendment was provided in the proposed rule and is not repeated here.

Comments and Responses

NMFS received a September 2002 minority report signed by two Council members, a November 2002 minority report signed by one Council member, and nine letters opposing aspects of the corrected amendment and/or the proposed rule. Twelve letters in support of the proposed rule were received. Neither minority report was filed specifically in response to the proposed rule or the corrected amendment, but both reports addressed prior Council requests that are related to the proposed rule. Therefore, responses to the minority reports are also provided here.

September 2002 Minority Report

A minority report was submitted by two Council members that contained objections to the Council's action at its September 2002 meeting regarding a letter to NMFS which modified a final Council motion adopted in March 2001. The September 2002 Council motion stated, ''To write a letter to NMFS stating that it was the intent of the Council under C–1. Eligibility - to provide for fully transferable reef fish or coastal migratory pelagic charter/headboat permits to individuals/charter vessels who held valid permits on March 29, 2001, or who had applied for such permits received in NMFS' office by March 29, 2001. The intent of the Council was to cap the effort and passenger capacity of vessels as of March 29, 2001.'' Following are the minority report comments related to this action.

Comment 1: The action clearly violates the basic rules of statutory construction to the detriment of persons who have taken or may take actions based on the language of the original Council motion.

Response: In determining the scope of the measures proposed by the Council, NMFS promulgates appropriate regulations in light of the entire administrative record. The final rule is the result of a detailed review of such record, and the eligibility requirements are consistent with Council discussions on the issue. Further, NMFS is not construing a statute, but rather a motion made by a Council member, and the agency has a duty to examine the record developed by the Council in order to clarify ambiguities and resolve inconsistencies in the language used. The Council assisted in this endeavor by providing clarification of its intent.

Comment 2: Some remarks from the minutes of the '01 Mobile meeting contradict the newly construed meaning of the eligibility provisions of the Amendment as stated in the action contested herein. Therefore, the present action is not fully supported even on its merits.

Response: With the exception of the single eligibility criterion, which Council staff acknowledged was included in the amendment erroneously, and is being removed in this final rule, the record supports NMFS' current interpretation of the Mobile motion. The fact that some members held different views does not mean that the action is not supported by the record. Unanimous votes are fairly uncommon, and a majority of the Council concurred with the action.

Comment 3: Action taken at this meeting was not properly noticed to the affected public. Therefore, it will be a surprise move to affected parties, many of whom participated in the negotiations relating to passage of the original language, and many of whom can be substantially adversely impacted by this new move, clearly contrary to the principles of public notice contained in the M-S Act [sic] (Magnuson-Stevens Act) and other applicable law.

Response: The published agenda indicated that on Tuesday, September 10, 2002, the Mackerel Management Committee would hear a ''Status Report on the Charter Vessel/Headboat Moratorium Amendment.'' NMFS presented this status report, which included a discussion of the fact that one of the eligibility requirements included in the amendment prepared by staff was not supported elsewhere in the administrative record. The Council agreed that NMFS' review was correct and that such criterion was in error. As a result, the Council voted to acknowledge in writing to the Secretary, its concurrence with this determination, along with another suggested clarification which is not part of this final rule. No new action was taken by the Council at the September 2002 meeting for which further public notice was required. Those members of the public who had participated throughout the process were aware of the inclusion of the erroneous criterion in the final rule, and first indicated the possibility of error to NMFS just prior to the effective date of the final rule.

Comment 4: Five Council members who participated in the original vote in Mobile were not at this Metairie meeting to tell what they thought or knew of the original adopted language.

Response: It is true that the membership of the Council had changed, and all new members abstained from discussing the issue and voting on the letter to the Secretary.

Comment 5: The original action in Mobile was taken as a joint effort of the Reef Fish and Coastal Migratory Pelagic Fisheries Committees. The charterboat moratorium affects both fisheries. The present action at the Metairie meeting seeking to modify the results of the joint effort passed through only the Reef Fish Committee, and did not pass through a joint committee, nor was the joint committee convened for this purpose.

Response: See the response to comment 3 as to the ''action'' taken by the Council. The only committee to hear the update at the September 2002 meeting was the Coastal Migratory Pelagic committee, but the topic was

addressed at length during full Council session; hence, all persons who would have comprised a joint committee had an opportunity to participate in the full Council session.

Comment 6: The Council members and the public did not have, before taking this action, any alternatives, impacts, scoping or other facts and documents required by the National Environmental Policy Act (NEPA) and M-S [sic].

Response: See the response to comment 3 as to the ''action'' taken by the Council. When ''action'' was taken on this amendment in March 2001, the Council had before it all the pertinent materials and was fully compliant with the applicable laws in its consideration and approval of the amendment.

Comment 7: Since the present action will affect a fishery jointly shared with the South Atlantic Council, the action, as was the original action, must be passed through the South Atlantic Council for approval.

Response: See the response to comment 3 as to the ''action'' taken by the Council. Given that there was no ''action'' taken on the amendment itself, only a confirmation of an error in the document, which in no way pertained to the South Atlantic Council's area of jurisdiction, there was no need for the South Atlantic Council to approve it again.

Comment 8: Allowing this to happen sets a bad precedent as to the ability of the fishing industry to rely on anything the Council or NMFS does. It should be viewed as an action by the Council at the request of NMFS that will seriously erode confidence in the system.

Response: The provisions in this final rule reflect what was discussed at the meetings and what is contained in the record, rather than the erroneous eligibility criterion which appeared in the document after Council approval. Maintaining erroneous regulations, which differ from those discussed at public meetings, would not promote public confidence in NMFS or the Council.

November 2002 Minority Report

A minority report was submitted by one Council member that contained objections to the Council's action at its November 2002 meeting regarding a letter requesting that the Secretary of Commerce implement via emergency action a provision that again amends two fishery management plans without going through the plan amendment process. The Council's November 2002 motion stated ''To write a letter to the Secretary of Commerce to implement via emergency action the language of the motion adopted by the Council at its September 9–12, 2002, meeting amended as follows: ''It was the intent of the Council that under C–1 - to provide for fully transferable reef fish or coastal migratory pelagic charter/headboat permits to individuals/charter vessels who held valid permits on March 29, 2001, or held a valid permit during the preceding year or had applied for such permits received in the NMFS office by March 29, 2001. The intent of the Council was to cap the effort and passenger capacity of vessels as of March 29, 2001.'' Following are the minority report comments related to this action.

Comment 9: This action was taken without any notice to the public or to the affected classes of vessel owners.

Response: The only action taken at the November 2002 meeting was that the Council requested NMFS to implement via emergency rule a moratorium containing the eligibility requirements supported by the record. While no notice was included in the published agenda, section 302(i)(2)(C) of the Magnuson-Stevens Act expressly excludes from the prior public notice requirement modifications to the published agenda addressing emergency actions. As the Magnuson-Stevens Act requires, notice of the perceived emergency and need for action was given immediately at the meeting.

Comment 10: The actions by NMFS in publishing the regulations and by the Council at both meetings since the Mobile meeting would result in regulations that implement something more restrictive than the Council Plan Amendment Motion establishing the moratorium.

Response: NMFS actions in promulgating this final rule will implement the moratorium supported by the administrative record as developed at the March 2001 Council meeting in Mobile, Alabama. This final rule will actually be less restrictive than the prior final rule which contained an erroneous eligibility criterion. The erroneous eligibility criterion was a requirement to hold a valid permit on the effective date of the final rule. Contrary to the assertions contained in the minority report, the correction would slightly increase, rather than decrease, the number of participants compared to the erroneous regulation.

Comment 11: The requirements relative to emergency action are not met by the content of the eligibility measures; only by the pending termination of existing permits.

Response: NMFS is not implementing the moratorium with the corrected criteria via emergency rule. The agency did exactly as this comment advocates in using an emergency rule to prevent the potential economic disruption of the charter industry upon implementation of the previous final rule which contained the erroneous criterion.

Comment 12: No scientific justification or information was given upon which to base the Council's actions (contrary to national standard 2 and other applicable laws).

Response: The original decision to implement a moratorium was based on the best available scientific information regarding the status of certain overfished species in the Gulf, which were subject to considerable increasing pressure by the expanding charter fleet in the region. No new management measures subject to national standard 2 have been proposed by NMFS or the Council with regard to the charter permit moratorium. Also, see the following response regarding the change to the eligibility requirements from the March 2001 Mobile motion.

Comment 13: Changing the eligibility provisions without following the Plan Amendment process will be a serious insult to the M-S [sic] Act Council Conservation and Management process.

Response: NMFS has not changed the eligibility provisions from those approved by the Council at the March 2001 meeting in Mobile, Alabama. As the record clearly indicates, this final rule merely removes a single eligibility criterion that was erroneously included in the amendment and thereby incorporated in the prior regulations. As to the suggestion that the motion from the March 2001 Mobile meeting made eligible all persons who had ever held a permit for either fishery, this claim is simply not supported by the record. The maker of the motion for the Reef Fish Management Committee stated that the intent of the moratorium criteria was to cap effort (hence the number of eligible vessels) at 2001 levels. Allowing all persons who ever held such a permit for either fishery regardless of the lack of recent participation is clearly inconsistent with the concept of capping effort at 2001 levels.

Comment 14: NMFS was (and would be) acting outside its authority in publishing implementing regulations changing the eligibility requirements of the Council's Plan Amendment motion.

Response: See the response to the previous comment.

Comment 15: NEPA was not followed at the Mobile meeting, and that let the eligibility requirements of the implementing regulations differ from the Motion establishing the permit moratorium system.

Response: The duty to satisfy NEPA rests with NMFS and it was complied with through the Council's preparation of an Environmental Assessment and a finding of no significant impact (FONSI) considering the proposed action, a reasonable range of alternatives, and the potential impacts of such measures on the human environment.

Other Public Comments

Comment 16: Eight individuals stated that the permit moratorium restricted free enterprise throughout the recreational for-hire sector.

Response: During the moratorium, new participation into the fisheries can still occur through the transfer of existing permits, albeit at a higher entry cost than in the absence of the moratorium. Thus, new entry can continue to occur without resulting in increased fishing mortality rates on the affected stocks.

Comment 17: There has been no discussion of the impact or profitability of restricting vessel eligibility so that vessels having a valid permit at any time from 1987 (when permits were first issued) through 3/29/00, but not since, would not be eligible for a moratorium permit.

Response: The economic analysis for the amendment looked at the impact of the moratorium on new entrants to the fishery, which for present purposes includes this class of individuals. Prior participants, who no longer participated in the fishery, would be affected in the identical manner as people who had never participated and now wanted to enter the fishery.

Comment 18: In addition to restating previous comments made in the minority reports, and on subsequent rules, one individual objected to the amendment, specifically the manner in which permit eligibility is established.

Response: As stated in the response to comment 1, NMFS must promulgate regulations in light of the administrative record as a whole, which supports the approach taken in the final rule. The purpose of the moratorium was to cap current effort, while allowing historical participants to continue in the fishery, and the final rule providing eligibility to owners of vessels who held permits during the qualifying period does just this. Owners (or historical captains as the case may be) are eligible for permits based on participation with some vessel in the respective fishery during the qualifying time period. The Council has clearly expressed its intent on this issue, and in light of the administrative record as a whole, the approach suggested in these comments would conflict with the Council's stated intent and the objective of the amendment.

Change From the Proposed Rule

In § 622.4(r)(3), the third sentence is revised to indicate that the letter of eligibility for an historical captain is valid only for a vessel of the same or lesser authorized passenger capacity as the vessel used to document earned income for eligibility purposes. The proposed rule language required that the passenger capacity be the same as the vessel used to document earned income (i.e., would not be valid for a vessel with lesser passenger capacity). This change from the proposed rule is consistent with the Council's intent to cap fishing effort (not to discourage or preclude reduction in fishing effort); makes the rule language regarding this eligibility and transferability provision consistent; and avoids unnecessary administrative procedures (i.e., issuance and an otherwise unnecessary transfer to a vessel of lesser capacity).

Classification

The Administrator, Southeast Region, NMFS, determined that the corrected Amendment is necessary for the conservation and management of the Gulf reef fish and coastal migratory pelagics fisheries and that it is consistent with the Magnuson-Stevens Act and other applicable laws.

This final rule has been determined to be not significant for purposes of E.O. 12866.

NMFS prepared an FRFA for this final rule pursuant to § 604 of the Regulatory Flexibility Act. A summary of the FRFA follows.

The Magnuson-Stevens Act provides the statutory basis for the rule. Under a rule promulgated on June 28, 2002 (67 FR 43558), all for-hire operators in the reef fish and/or coastal migratory pelagic fisheries in the Gulf of Mexico exclusive economic zone (EEZ) were required to have a valid limited access moratorium permit beginning December 26, 2002. The objective of that rule was to cap the number of for-hire vessels permitted to fish for reef fish or coastal migratory pelagics in the EEZ of the Gulf of Mexico at the current level while the Council assesses the actions necessary to restore overfished reef fish and king mackerel stocks and determine whether a more comprehensive effort management system is appropriate for these fisheries. Subsequent to publication of the rule, it was determined that the amendment did not correctly reflect the actions approved by the Council, resulting in the unintentional exclusion of 935 historical participants in the fishery. As an interim measure prior to correcting this error via normal rulemaking, NMFS promulgated an emergency rule that extended several dates associated with the moratorium to allow those participants erroneously excluded from qualifying for a moratorium permit to continue participation in the fishery, pending completion of the normal rulemaking process. The primary objective of this final rule is, therefore, to correct the error associated with the eligibility criterion for the for-hire moratorium permit. This final rule will revise, consistent with the Council's clarification of intent, one of the eligibility criteria for obtaining a Gulf charter vessel/headboat moratorium permit to remove a restrictive provision requiring that a valid permit was held on July 29, 2002. Complementary logistical adjustments, e.g., reopening the application process, extension of deadlines, etc., are also included.

The qualification requirements for the initial issuance of the moratorium permit will mandate the provision of information necessary to establish qualification for the permit, such as information on income, record of past participation in the fishery, and proof of the time a vessel was under construction. Permit renewal will require that permitted vessels participate in the standard data collection programs implemented in the region which will require that information be maintained on standard vessel operation information, such as trips, passenger loads, catch success, etc. All information elements required for these actions are standard elements essential to the successful operation of the business and should already be collected and maintained as standard operating practice by the business. These requirements do not require professional skills, and, therefore, may be deemed not to be onerous on the affected participants.

Two categories of impacted entities are presumed, those that qualify for the for-hire permit and those that do not. Those who qualify for permits fall under two groups; those who qualify based on permit records and those who qualify based on the provisions for historical captains or vessel-under-construction. Based on permit records, an estimated 3,071 permitted for-hire vessels would qualify for the moratorium permit, of which 1,917 would qualify for both reef fish and coastal migratory pelagic permits, 974 would qualify for only the coastal migratory pelagic permit, and 180 would qualify for only the reef fish permit. In addition to these vessels, an indeterminate number of entities would qualify for the initial issuance of the for-

hire moratorium permit under the historical captain or vessel-under-construction criteria. In total, the two groups would constitute the universe of qualified entities. A precise estimate of this universe cannot be provided as, although it can be presumed that all active permits will be maintained to allow either sale of the permit or continued use, it cannot be determined how many entities will qualify under the historical captain or vessel-under-construction criteria. Of the 3,071 qualifying vessels, 2,136 vessels qualify under the status quo moratorium program, of which 1,373 vessels qualify for both permits, 99 vessels qualify for only the reef fish permit, and 664 vessels qualify for only the coastal migratory pelagic for-hire permit. This final rule will, therefore, allow the qualification of an additional 935 vessels, of which 544 vessels will qualify for both permits, 81 vessels will qualify for the reef fish permit, and 310 vessels will qualify for the coastal migratory pelagic permit. These 935 vessels represent approximately 30 percent of the historic fleet. It should be noted that all 3,071 vessels, including the 935 vessels that would additionally qualify as a result of the final rule, are all historical participants in the fishery. This condition is reflective of the Council's intent to stabilize participation at historical levels.

Business operations in the for-hire sector consist primarily, if not exclusively, of small business entities. For-hire vessel operations are considered small business entities if they generate receipts not in excess of $6.0 million per year. The average gross revenues for charter boats operating in 1997 was $83,000 for vessels operating in Alabama, Mississippi, Louisiana, and Texas (based on average numbers of trips per vessel and average fee per trip) and $68,000 for vessels in Florida, while the average gross revenues for head boats/party boats was $328,000 from vessels operating in Alabama to Texas and $324,000 in Florida. Current revenues may exceed those of 1997, but the revenue performance of the fishery clearly qualifies the participants to fit the definition of small business entities. Since all entities operating in the fishery as well as the 935 new qualifiers will be affected by the final rule, the criterion of a substantial number of the small business entities being affected by the rule will be met.

The determination of significant economic impact can be ascertained by examining two criteria, disproportionality and profitability. The disproportionality question is: Will the regulations place a substantial number of small business entities at a significant competitive disadvantage to large business entities? Although some variation exists between vessel operation type (guide boat, charter boat, and head/party boat), vessel length, and degree of participation in the fishery (number of trips per year), all vessels are classified as small business entities. Thus, the issue of disproportionality is not relevant in the present case.

The profitability question is: Will the regulations significantly reduce profit for a substantial number of small entities? Two categories of operations will be affected by the final rule, qualifying vessels and non-qualifying vessels. Effects on qualifying vessels may accrue through the permit fee, the reporting requirement, and the limitation on passenger capacity expansion. While permit fees are $50 for the first permit and $20 each for any additional permit, all vessels are currently required to possess a permit. Thus, permit costs should not be substantially affected, nor should they significantly affect profits. The reporting requirement impacts time expenses rather than actual monetary outlays and, therefore, do not directly affect profitability. However, the time expenses are estimated at $13 for charterboat participants (5.5 interviews x 7 minutes per interview x $20 per hour) and $700 for headboat participants (140 logbooks per headboat x 15 minutes per logbook x $20 per hour). The effects on profits of the limitation on passenger capacity expansion cannot be estimated because neither the cost of purchasing an existing permit, the expected rate of expansion (what portion of vessels might be expected to expand their passenger capacity), or the expected average capacity expansion can be forecast.

Additionally, the 935 vessels that were previously erroneously excluded from qualification for the moratorium permit, and that would now be qualified under the final rule, will be allowed to continue their historic participation and accompanying profit performance and in addition will experience a substantial increase in profitability over what would occur under the status quo since they would have been precluded from continued participation under the June 28, 2002 rule. Since this is an increase in profit and not a decrease, significant reductions in profit are not expected to occur.

Effects on non-qualifying vessels would consist of the effects on business profits of not being allowed to continue participation in the fishery or enter the fishery without purchasing an existing permit. The effects on profits of these vessels is unknown since neither the price of the necessary permit nor the alternative business options (what they might do and what the profitability profile of this option is in lieu of participating in the for-hire fishery) for these vessels are known. It is also not possible to estimate the number of small entities this would affect, primarily because it can not be determined how many small business entities would seek to enter the fishery in the absence of the moratorium.

This final rule will allow qualification for the moratorium permit and continued operation of 935 vessels, or approximately 30 percent of the historic participants, in addition to the 2,136 vessels qualified under the status quo moratorium program, plus an unknown number of qualifiers under the historic captain and boat-under-construction provisions. Continued participation by these 935 vessels will allow the avoidance of a significant loss in performance and profits of these small business entities and the fishery as a whole. It is, therefore, concluded that the final rule will result in a significant beneficial economic impact on a substantial number of small entities (i.e., the 935 vessels).

No significant issues were raised by public comments in response to the IRFA. Therefore, no changes were made to the proposed rule as a result of such comments.

Ten alternatives to the initial eligibility requirements were considered. These were: allowing all persons who held a for-hire permit on the date of implementation of the amendment; allowing all persons who held a for-hire permit on either September 16, 1999 or November 11, 1999; using a control date of November 18, 1998 and allowing for continuous participation under permit, vessel replacement by current permitted participant and issuance of new permit, purchase of permitted vessel, or purchase of a new vessel and issuance of a new permit; establishment and eligibility requirements for a Class 1 (fully transferable) species endorsements; establishment and eligibility requirements for a Class 2 (non-transferable) species endorsements; historical captain permit/endorsement provisions (2 alternatives); boat-under-construction provisions (2 alternatives); and allowing all persons who held a for-hire permit on or before January 1, 2002. Since the intent of the Council is to accommodate actual participation existent at the time of amendment development and the perception was strong that many active

participants did not possess the required permits, control dates more restrictive than the proposed control date would increase the negative impacts on the fishery through the exclusion of active participants, contrary to the intent of the Council. More liberal control dates, however, while reducing the potential universe of excluded vessels, would also be contrary to the Council's intent of stabilizing participation at the level existent at the time of amendment development. The transferability provisions could result in contraction of the fleet, contrary to the intent of stabilization and would increase the negative impacts on the fishery. The alternative historical captain provisions would have increased the burden of eligibility and increased the negative impacts. The alternative provisions for boats under construction are more restrictive than those of the final rule because it would have been harder to qualify for a permit. This would have increased the negative impacts on the fishery because more permit holders would have been excluded. In summary, this final rule accomplishes the Council's intent while minimizing impacts.

Copies of the FRFA are available upon request (see **ADDRESSES**).

This final rule contains two collection-of-information requirements subject to the Paperwork Reduction Act (PRA)--namely a requirement to submit a charter vessel/headboat permit application and submission of appeals of NMFS' initial denial of a charter vessel/headboat permit -that have been approved by OMB under control number 0648–0205. The public reporting burdens for these collections of information are estimated to average 20 minutes for a permit application, an additional 2 hours for additional documentation for an application based on a vessel being under construction or on historical captain status, and 5 hours for an appeal. These estimates include the time for reviewing instructions, searching existing data sources, gathering and maintaining the data needed, and completing and reviewing the collections of information. Send comments regarding these burden estimates, or any other aspect of these data collections, including suggestions for reducing the burden, to NMFS and OMB (see **ADDRESSES**).

Notwithstanding any other provision of law, no person is required to respond to, nor shall a person be subject to a penalty for failure to comply with, a collection of information subject to the requirements of the PRA unless that collection of information displays a currently valid OMB control number.

List of Subjects in 50 CFR Part 622

Fisheries, Fishing, Puerto Rico, Reporting and recordkeeping requirements, Virgin Islands.

Dated: May 9, 2003.

William T. Hogarth,

Assistant Administrator for Fisheries, National Marine Fisheries Service.

■ For the reasons set out in the preamble, 50 CFR part 622 is amended as follows:

PART 622—FISHERIES OF THE CARIBBEAN, GULF, AND SOUTH ATLANTIC

■ 1. The authority citation for part 622 continues to read as follows:

Authority: 16 U.S.C. 1801 *et seq.*

■ 2. In § 622.4, the suspensions of the first sentence of paragraph (r)(1), the first sentence of paragraph (r)(6), and paragraph (r)(8)(v) are lifted; and paragraph (r) is revised to read as follows:

§ 622.4 Permits and fees.

* * * * *

(r) *Moratorium on charter vessel/headboat permits for Gulf coastal migratory pelagic fish and Gulf reef fish.* The provisions of this paragraph (r) are applicable through June 16, 2006. Notwithstanding the other provisions of this paragraph (r), the expiration dates of all charter vessel/headboat permits for Gulf reef fish or Gulf coastal migratory pelagic fish that were not issued under the provision of this paragraph (r) and that were valid or renewable as of December 17, 2002, will be extended through November 13, 2003, provided that a permit has not been issued under this paragraph (r) for the applicable vessel.

(1) *Applicability.* Beginning November 13, 2003, the only valid charter vessel/headboat permits for Gulf coastal migratory pelagic fish or Gulf reef fish are those that have been issued under the moratorium criteria in this paragraph (r). No applications for additional charter vessel/headboat permits for these fisheries will be accepted. Existing permits may be renewed, are subject to the transferability provisions in paragraph (r)(9) of this section, and are subject to the requirement for timely renewal in paragraph (r)(10) of this section.

(2) *Initial eligibility.* Initial eligibility for a charter vessel/headboat permit for Gulf coastal migratory pelagic fish or Gulf reef fish is limited to the following:

(i) An owner of a vessel that had a valid charter vessel/headboat permit for Gulf reef fish or coastal migratory pelagic fish on March 29, 2001, or held such a permit during the preceding year or whose application for such permit had been received by NMFS, by March 29, 2001, and was being processed or awaiting processing.

(ii) Any person who can provide NMFS with documentation verifying that, prior to March 29, 2001, he/she had a charter vessel or headboat under construction and that the associated expenditures were at least $5,000 as of that date. If the vessel owner was constructing the vessel, the vessel owner must provide NMFS with receipts for the required expenditures. If the vessel was being constructed by someone other than the owner, the owner must provide NMFS with a copy of the contract and/or receipts for the required expenditures.

(iii) A historical captain, defined for the purposes of paragraph (r) of this section as a person who provides NMFS with documentation verifying that

(A) Prior to March 29, 2001, he/she was issued either a USCG Operator of Uninspected Passenger Vessel license (commonly referred to as a 6–pack license) or a USCG Masters license; operated, as a captain, a federally permitted charter vessel or headboat in the Gulf reef fish and/or coastal migratory pelagic fisheries; but does not have a fishery permit issued in their name; and

(B) At least 25 percent of his/her earned income was derived from charter vessel or headboat fishing in one of the years, 1997, 1998, 1999, or 2000.

(3) *Special conditions applicable to eligibility based on historical captain status.* A person whose eligibility is based on historical captain status will be issued a letter of eligibility by the RA. The letter of eligibility may be redeemed through the RA for a charter vessel/headboat permit for Gulf coastal migratory pelagic fish and/or Gulf reef fish, with a historical captain endorsement. The letter of eligibility is valid for the duration of the moratorium; is valid only for a vessel of the same or lesser authorized passenger capacity as the vessel used to document earned income in paragraph (r)(2)(iii)(B) of this section; and is valid only for the fisheries certified on the application under paragraph (r)(2)(iii)(A) of this section. A charter vessel/headboat permit for Gulf coastal migratory pelagic fish or Gulf reef fish with a historical captain endorsement is valid only on a vessel that the historical captain operates as a captain.

(4) *Determination of eligibility based on permit history.* NMFS' permit records are the sole basis for

determining eligibility based on permit or application history. An owner of a currently permitted vessel who believes he/she meets the permit or application history criterion based on ownership of a vessel under a different name, as may have occurred when ownership has changed from individual to corporate or vice versa, must document his/her continuity of ownership. An owner will not be issued initial charter vessel/headboat permits for Gulf coastal migratory pelagic fish or Gulf reef fish under the moratorium in excess of the number of federally permitted charter vessels and/or headboats that he/she owned simultaneously at some time during the period March 29, 2000 through March 29, 2001.

(5) *Application requirements and procedures*—(i) *General.* An applicant who desires a charter vessel/headboat permit for Gulf coastal migratory pelagic fish or Gulf reef fish must submit an application for such permit to the RA postmarked or hand-delivered not later than September 15, 2003. Application forms are available from the RA. The information requested on the application form varies according to the eligibility criterion that the application is based upon as indicated in paragraphs (r)(5)(ii), (r)(5)(iii), and (r)(5)(iv) of this section; however, all applicants must provide a copy of the applicable, valid USCG Operator of Uninspected Passenger Vessel license or Masters license and valid USCG Certificate of Inspection. Failure to apply in a timely manner will preclude permit issuance even when the applicant meets the eligibility criteria for such permit.

(ii) *Application based on the prior permit/application history criterion.* On or about June 16, 2003, the RA will mail an application for a charter vessel/headboat permit for Gulf coastal migratory pelagic fish and/or Gulf reef fish to each owner of a vessel who, according to NMFS' permit records, is eligible based on the permit or application history criterion in paragraph (r)(2)(i) of this section. Information requested on the application is consistent with the standard information required in paragraph (b)(3)(ii) of this section. The RA will also mail each such owner a notice that his/her existing charter vessel/headboat permit(s) for coastal migratory pelagic fish and/or Gulf reef fish will expire November 13, 2003, and that the new permit(s) required under this moratorium will be required as of that date. A vessel owner who believes he/she qualifies for a charter vessel/headboat permit for Gulf coastal migratory pelagic fish and/or Gulf reef fish based on permit or application history, but who does not receive an application from the RA, must request an application from the RA and provide documentation of eligibility. The RA will mail applications and notifications to vessel owner addresses as indicated in NMFS' permit records.

(iii) *Application based on a charter vessel/headboat under construction prior to March 29, 2001.* A person who intends to obtain a charter vessel/headboat permit for Gulf coastal migratory pelagic fish and/or Gulf reef fish based on the vessel-under-construction eligibility criterion in paragraph (r)(2)(ii) of this section must obtain an application from the RA. Information requested on the application includes the standard information required in paragraph (b)(3)(ii) of this section and the documentation of construction and associated costs as specified in paragraph (r)(2)(ii) of this section.

(iv) *Application based on historical captain status.* A person who intends to obtain a charter vessel/headboat permit for Gulf coastal migratory pelagic fish and/or Gulf reef fish based on historical captain status must obtain an application from the RA. Information requested on the application includes the standard information required in paragraph (b)(3)(ii) of this section and documentation of the criteria specified in paragraphs (r)(2)(iii)(A)and (B) of this section. Such documentation includes income tax records pertinent to verifying earned income; a copy of the applicable USCG license and/or Certificate of Inspection; and a notarized affidavit signed by a vessel owner certifying the period the applicant served as captain of a charter vessel or headboat permitted for Gulf reef fish and/or coastal migratory pelagic fish, whether the charter vessel or headboat was permitted for Gulf reef fish or coastal migratory pelagic fish or both, and whether the charter vessel or headboat was uninspected (i.e., 6–pack) or had a USCG Certificate of Inspection.

(v) *Incomplete applications.* If an application that is postmarked or hand-delivered in a timely manner is incomplete, the RA will notify the applicant of the deficiency. If the applicant fails to correct the deficiency within 20 days of the date of the RA's notification, the application will be considered abandoned.

(6) *Issuance of initial permits.* If a complete application is submitted in a timely manner and the applicable eligibility requirements specified in paragraph (r)(2) of this section are met, the RA will issue a charter vessel/headboat permit for Gulf coastal migratory pelagic fish and/or Gulf reef fish or a letter of eligibility for such fisheries, as appropriate, and mail it to the applicant not later than November 3, 2003.

(7) *Notification of ineligibility.* If the applicant does not meet the applicable eligibility requirements of paragraph (r)(2) of this section, the RA will notify the applicant, in writing, of such determination and the reasons for it not later than October 14, 2003.

(8) *Appeal process.* (i) An applicant may request an appeal of the RA's determination regarding initial permit eligibility, as specified in paragraph (r)(2) of this section, by submitting a written request for reconsideration to the RA with copies of the appropriate records for establishing eligibility. Such request must be postmarked or hand-delivered within 45 days after the date of the RA's notification of ineligibility and may include a request for an oral hearing. If an oral hearing is granted, the RA will notify the applicant of the place and date of the hearing and will provide the applicant a maximum of 45 days prior to the hearing to provide information in support of the appeal.

(ii) A request for an appeal constitutes the appellant's authorization under section 402(b)(1)(F) of the Magnuson-Stevens Fishery Conservation and Management Act (16 U.S.C. 1801 et. seq.) for the RA to make available to the appellate officer(s) such confidential records as are pertinent to the appeal.

(iii) The RA may independently review the appeal or may appoint one or more appellate officers to review the appeal and make independent recommendations to the RA. The RA will make the final determination regarding granting or denying the appeal.

(iv) The RA and appellate officer(s) are empowered only to deliberate whether the eligibility criteria in paragraph (r)(2) of this section were applied correctly. Hardship or other factors will not be considered in determining eligibility.

(v) The RA will notify the applicant of the decision regarding the appeal within 45 days after receipt of the request for appeal or within 45 days after the conclusion of the oral hearing, if applicable. The RA's decision will constitute the final administrative action by NMFS.

[FR Doc. 03–12184 Filed 5–14–03; 8:45 am]

BILLING CODE 3510–22–S

Proposed Rules

Federal Register
Vol. 68, No. 94
Thursday, May 15, 2003

This section of the FEDERAL REGISTER contains notices to the public of the proposed issuance of rules and regulations. The purpose of these notices is to give interested persons an opportunity to participate in the rule making prior to the adoption of the final rules.

FEDERAL ELECTION COMMISSION

11 CFR Parts 104, 107, 110, 9003, 9004, 9008, 9032 Through 9036, and 9038

[Notice 2003–10]

Extension of Public Comment Period for Public Financing of Presidential Candidates and Nominating Conventions

AGENCY: Federal Election Commission.

ACTION: Proposed rule; reopening of public comment period.

SUMMARY: This notice extends the public comment period on the Federal Election Commission's notice of proposed rulemaking on public financing of presidential candidates and nominating conventions to May 23, 2003. The Commission will hold a hearing on the proposed rules on June 6, 2003, at 10 a.m.

DATES: Comments must be received on or before May 23, 2003. The Commission will hold a hearing on the proposed rules for June 6, 2003, at 10 a.m., if it receives sufficient requests to testify. Commenters wishing to testify at the hearing must so indicate in their written or electronic comments.

ADDRESSES: All comments should be addressed to Ms. Mai T. Dinh, Acting Assistant General Counsel, and must be submitted in either electronic or written form. Electronic mail comments should be sent to *pubfund2004@fec.gov* and must include the full name, electronic mail address and postal service address of the commenter. Electronic mail comments that do not contain the full name, electronic mail address and postal service address of the commenter will not be considered. If the electronic mail comments include an attachment, the attachment must be in the Adobe Acrobat (.pdf) or Microsoft Word (.doc) format. Faxed comments should be sent to (202) 219–3923, with printed copy follow-up to ensure legibility. Written comments and printed copies of faxed comments should be sent to the Federal Election Commission, 999 E Street, NW., Washington, DC 20463. Commenters are strongly encouraged to submit comments electronically to ensure timely receipt and consideration. The Commission will make every effort to post public comments on its Web site within 10 business days of the close of the comment period. The hearing will be held in the Commission's ninth floor meeting room, 999 E Street, NW., Washington, DC.

FOR FURTHER INFORMATION CONTACT: J. Duane Pugh Jr., Senior Attorney, 999 E Street, NW., Washington, DC, 20463, (202) 694–1650 or (800) 424–9530.

SUPPLEMENTARY INFORMATION: The Federal Election Commission recently requested comment on proposed changes to its rules governing publicly financed presidential candidates, in both the primary and general elections, and national nominating conventions. *See Notice of Proposed Rulemaking on Public Financing of Presidential Candidates and Nominating Conventions,* 68 FR 18484 (Apr. 15, 2003) (''*Public Financing NPRM*''). The document states that the public comment period closed on May 9, 2003, and a hearing on the proposed rules was tentatively scheduled for May 19, 2003. On May 2, 2003, the United States District Court for the District of Columbia issued a decision in *McConnell* v. *FEC,* Civ. No. 02–582, 2003 WL 21003144 (D.D.C. May 1, 2003), *notice of appeal filed* (U.S. May 2, 2003), which addresses certain provisions of the Bipartisan Campaign Reform Act of 2002, Public Law 107–155, 116 Stat. 81 (Mar. 27, 2002). A portion of the notice of proposed rulemaking concerned the application of the Bipartisan Campaign Reform Act and the Commission's implementing regulations to national nominating conventions. *See Public Financing NPRM,* 68 FR at 18502–07. In order to permit commenters the opportunity to consider the *McConnell* v. *FEC* decision and its impact on national nominating conventions, the Commission is extending the comment period until May 23, 2003, and rescheduling the hearing on the proposed rules to June 6, 2003, at 10 a.m.

Dated: May 8, 2003.

Ellen L. Weintraub,

Chair, Federal Election Commission.

[FR Doc. 03–11978 Filed 5–14–03; 8:45 am]

BILLING CODE 6715–01–P

DEPARTMENT OF TRANSPORTATION

Federal Aviation Administration

14 CFR Part 25

[Docket No. NM254; Notice No. 25–03–02–SC]

Special Conditions: Cessna Model 680 Sovereign; Side Facing Single Occupant Seats

AGENCY: Federal Aviation Administration (FAA), DOT.

ACTION: Notice of proposed special conditions.

SUMMARY: This document proposes special conditions for the Cessna Model 680 Sovereign airplane. This airplane will have a novel or unusual design feature(s) associated with side-facing single-occupant seats. The applicable airworthiness regulations do not contain adequate or appropriate safety standards for this design feature. These proposed special conditions contain the additional safety standards that the Administrator considers necessary to establish a level of safety equivalent to that established by the existing airworthiness standards.

DATES: Comments must be received on or before June 30, 2003.

ADDRESSES: Comments on this proposal may be mailed in duplicate to: Federal Aviation Administration, Transport Airplane Directorate, Attn: Rules Docket (ANM–113), Docket No. NM254, 1601 Lind Avenue, SW., Renton, Washington 98055–4056; or delivered in duplicate to the Transport Airplane Directorate at the above address. Comments must be marked: Docket No. NM254. Comments may be inspected in the Rules Docket weekdays, except Federal holidays, between 7:30 a.m. and 4 p.m.

FOR FURTHER INFORMATION CONTACT: Mark Quam, FAA, Standardization Branch, ANM–113, Transport Airplane Directorate, Aircraft Certification Service, 1601 Lind Avenue, SW., Renton, Washington 98055–4056; telephone (425) 227–2145, facsimile (425) 227–1149.

SUPPLEMENTARY INFORMATION:

Comments Invited

The FAA invites interested persons to participate in this rulemaking by submitting written comments, data, or views. The most helpful comments

reference a specific portion of the special conditions, explain the reason for any recommended change, and include supporting data. We ask that you send us two copies of written comments.

We will file in the docket all comments we receive, as well as a report summarizing each substantive public contact with FAA personnel concerning these special conditions. The docket is available for public inspection before and after the comment closing date. If you wish to review the docket in person, go to the address in the **ADDRESSES** section of this preamble between 7:30 a.m. and 4 p.m., Monday through Friday, except Federal holidays.

We will consider all comments we receive on or before the closing date for comments. We will consider comments filed late if it is possible to do so without incurring expense or delay. We may change these special conditions in light of the comments we receive.

If you want the FAA to acknowledge receipt of your comments on this proposal, include with your comments a pre-addressed, stamped postcard on which the docket number appears. We will stamp the date on the postcard and mail it back to you.

Background

On November 24, 1999, Cessna Aircraft Company, One Cessna Boulevard, Wichita, KS 67277, applied for type certificate for their new Cessna Model 680 Sovereign airplane. The Model 680 Sovereign is a twin engine pressurized executive jet airplane with standard seating provisions for 12 passenger/crew and allowance for baggage and optional equipment. This airplane will have a maximum takeoff weight of 30,000 pounds with a wingspan of 63.1 feet and will have two aft-mounted Pratt & Whitney 306C engines.

Cessna Model 680 offers interior arrangements, which include single-occupant side-facing seat installations. These seats are installed on the LH and RH side of the cabin's forward section, forward of and opposite to the entry door respectively. Dynamic testing of all seats approved for occupancy during takeoff and landing is required by 14 CFR 25.562. The pass/fail criteria for the testing developed in Amendment 25–64 to § 25.562 focused primarily on fore/aft facing seats. Side facing seating installations were not adequately addressed for transport category airplane in this Amendment.

These special conditions are applicable to single-occupant side-facing seats only. They are not intended to be used for multiple-occupant side-facing divans or sofas, as they do not account for possible interaction among the occupants.

Type Certification Basis

Under the provisions of 14 CFR 21.17, the Cessna Aircraft Company must show that the Model 680 Sovereign airplane meets the applicable provisions of 14 CFR part 25, effective February 1, 1965, as amended by Amendments 25–1 through 25–98; 14 CFR part 34, effective September 10, 1990, as amended by any amendment in effect on the date of certification. Subsequent changes have been made to § 21.101 as part of Amendment 21–77, but those changes do not become effective until June 10, 2003.

If the Administrator finds that the applicable airworthiness regulations (*i.e.*, 14 CFR part 25) do not contain adequate or appropriate safety standards for the Cessna Model 680 Sovereign airplane because of a novel or unusual design feature, special conditions are prescribed under the provisions of § 21.16.

In addition to the applicable airworthiness regulations and special conditions, the Cessna Model 680 Sovereign must comply with the fuel vent and exhaust emission requirements of part 34 and the noise certification requirements of part 36, and the FAA must issue a finding of regulatory adequacy pursuant to § 611 of Public Law 92–574, the ''Noise Control Act of 1972.''

Special conditions, as defined in 14 CFR 11.19, are issued in accordance with § 11.38 and become part of the type certification basis in accordance with § 21.17(a)(2), Amendment 21–69, effective September 16, 1991. Special conditions are initially applicable to the model for which they are issued. Should the type certificate for that model be amended later to include any other model that incorporates the same novel or unusual design feature, the special conditions would also apply to the other model under the provisions of § 21.101(a)(1), Amendment 21–69, effective September 16, 1991.

Novel or Unusual Design Features

The Cessna Model 680 offers interior arrangements, which include single-occupant side-facing seat installations. These seats are installed on the LH and RH side of the cabin's forward section, forward and opposite to the entry door respectively. Dynamic testing of all seats approved for occupancy during takeoff and landing is required by § 25.562. The pass/fail criteria for the testing developed in Amendment 25–64 to § 25.562 focused primarily on fore/aft facing seats. Side facing seating installations were not adequately addressed for transport category airplanes in this Amendment.

Discussion

The following injury criteria and testing represent the minimum acceptable standards, and are being proposed for certification of the Model 680 single-occupant side-facing seats, and are to be included as requirements in the proposed special conditions. However, the existing requirements call for a ''no yaw'' test condition. Cessna is proposing to demonstrate values of thoracic trauma index (TTL) and lateral pelvic acceleration (LPA) for a ''10 degree yaw'' for which it has some test data. In this case, Cessna must show the ''10 degree yaw'' yields results that will only differ slightly from the ''no yaw'' condition and that these differences would not be of such magnitude as to exceed the maximum allowable.

Proposed Injury Criteria

(a) *Existing Criteria.* As referenced by § 25.785(b), all injury protection criteria of §§ 25.562(c)(1) through (c)(6) apply to the occupants of the single-occupant side-facing seats. Head injury criteria (HIC) assessments are only required for head contact with the seat and/or adjacent structures.

(b) *Body-to-wall/furnishing contact.* The seat must be installed aft of a structure such as an interior wall or furnishing that will contact the pelvis, upper arm, chest, or head of an occupant seated next to the structure. A conservative representation of the structure and its stiffness must be included in the tests. It is recommended, but not required, that the contact surface of this structure be covered with at least two inches of energy absorbing protective padding (foam or equivalent), such as Ensolite.

(c) *Thoracic Trauma.* Testing with a Side Impact Dummy (SID), as defined by 49 CFR part 572, subpart F, or its equivalent, must be conducted and TTI injury criteria acquired with the SID must be less than 85, as defined in 49 CFR part 572, subpart F. Side Impact Dummy TTI must be processed as defined in Federal Motor Vehicle Safety Standard (FMVSS) part 571.214, section S6.13.5. Rational analysis, comparing an installation with another installation where TTI data were acquired and found acceptable, may also be viable.

(d) *Pelvis.* Pelvic lateral acceleration must not exceed 130g, pelvic acceleration data must be processed as defined in FMVSS part 571.214, section S6.13.5

(f) *Shoulder Strap Loads.* Where upper torso straps (shoulder straps) are used for sofa occupants, tension loads in individual straps must not exceed 1,750 pounds. If dual straps are used for restraining the upper torso, the total strap tension loads must not exceed 2,000 pounds.

Applicability

As discussed above, these special conditions are applicable to the Cessna Model 680 Sovereign. Should Cessna Aircraft Company apply at a later date for a change to the type certificate to include another model incorporating the same novel or unusual design feature, the special conditions would apply to that model as well under the provisions of § 21.101(a)(1), Amendment 21–69, effective September 16, 1991.

Conclusion

This action affects only certain novel or unusual design features on the Cessna Model 680 Sovereign airplane. It is not a rule of general applicability, and it affects only the applicant who applied to the FAA for approval of these features on the airplane.

List of Subjects in 14 CFR Part 25

Aircraft, Aviation safety, Reporting and recordkeeping requirements.

The authority citation for these special conditions is as follows:

Authority: 49 U.S.C. 106(g), 40113, 44701, 44702, 44704.

The Proposed Special Conditions

Accordingly, the Federal Aviation Administration (FAA) proposes the following special conditions as part of the type certification basis for the Cessna Aircraft Company Model 680 Sovereign airplanes.

The minimum acceptable standards of injury criteria and testing requirements for dynamic certification of the Model 680 side-facing single-occupant seats are as follows:

(a) *Existing Criteria.* As referenced by § 25.785(b), all injury protection criteria of §§ 25.562(c)(1) through (c)(6) apply to the occupants of the side-facing seats. Head injury criteria (HIC) assessments are only required for head contact with the seat and/or adjacent structures.

(b) *Body-to-wall/furnishing contact.* The seat must be installed aft of a structure such as an interior wall or furnishing that will contact the pelvis, upper arm, chest, or head of an occupant seated next to the structure. A conservative representation of the structure and its stiffness must be included in the tests. It is recommended, but not required, that the contact surface of this structure must be covered with at least two inches of energy absorbing protective padding (foam or equivalent), such as Ensolite.

(c) *Thoracic Trauma.* Testing with a Side Impact Dummy (SID), as defined by 49 CFR Part 572, Subpart F, or its equivalent, must be conducted and TTI injury criteria acquired with the SID must be less than 85, as defined in 49 CFR Part 572, Subpart F. SID TTI must be processed as defined in Federal Motor Vehicle Safety Standard (FMVSS) Part 571.214, section S6.13.5. Rational analysis, comparing an installation with another installation where TTI data were acquired and found acceptable, may also be viable.

(d) *Pelvis.* Pelvic lateral acceleration must not exceed 130g, pelvic acceleration data must be processed as defined in FMVSS Part 571.214, section S6.13.5

(f) *Shoulder Strap Loads.* Where upper torso straps (shoulder straps) are used for occupants, tension loads in individual straps must not exceed 1,750 pounds. If dual straps are used for restraining the upper torso, the total strap tension loads must not exceed 2,000 pounds.

Issued in Renton, Washington, on May 5, 2003.

Ali Bahrami,

Acting Manager, Transport Airplane Directorate, Aircraft Certification Service.

[FR Doc. 03–12043 Filed 5–14–03; 8:45 am]

BILLING CODE 4910–13–P

DEPARTMENT OF TRANSPORTATION

Federal Aviation Administration

14 CFR Part 39

[Docket No. 2002–CE–05–AD]

RIN 2120–AA64

Airworthiness Directives; Cessna Aircraft Company Models 401, 401A, 401B, 402, 402A, 402B, 411, and 411A Airplanes

AGENCY: Federal Aviation Administration, DOT.

ACTION: Notice of proposed rulemaking (NPRM).

SUMMARY: This document proposes to supersede Airworthiness Directive (AD) 79–10–15 R2, which applies to all Cessna Aircraft Company (Cessna) Models 401, 401A, 401B, 402, 402A, 402B, 411, and 411A airplanes. AD 79–10–15 R2 currently requires repetitive inspections of the right and left wing spar lower cap areas for fatigue cracks and requires wing spar cap repair or replacement as necessary. Cessna has performed fatigue and crack growth analyses of the wings of these airplanes, and the Federal Aviation Administration (FAA) has evaluated this information and determined that a wing spar modification is necessary as well as periodic inspections. This proposed AD would require you to repetitively inspect the wing spar caps for fatigue cracks with any necessary repair or replacement on all airplanes and incorporate a spar strap modification on each wing spar on certain airplanes. The actions specified by this proposed AD are intended to prevent wing spar cap failure due to undetected fatigue cracks. Such failure could result in loss of a wing with consequent loss of airplane control.

DATES: The FAA must receive any comments on this proposed rule on or before August 8, 2003.

ADDRESSES: Submit comments to FAA, Central Region, Office of the Regional Counsel, Attention: Rules Docket No. 2002–CE–05–AD, 901 Locust, Room 506, Kansas City, Missouri 64106. You may view any comments at this location between 8 a.m. and 4 p.m., Monday through Friday, except Federal holidays. You may also send comments electronically to the following address: *9–ACE–7–Docket@faa.gov.* Comments sent electronically must contain ''Docket No. 2002–CE–05–AD'' in the subject line. If you send comments electronically as attached electronic files, the files must be formatted in Microsoft Word 97 for Windows or ASCII text.

You may get service information that applies to this proposed AD from the Cessna Aircraft Company, Product Support, PO Box 7706, Wichita, Kansas 67277; telephone: (316) 517–5800; facsimile: (316) 942–9006. You may also view this information at the Rules Docket at the address above.

FOR FURTHER INFORMATION CONTACT: Paul Nguyen, Aerospace Engineer, FAA, Wichita Aircraft Certification Office, 1801 Airport Road, Mid-Continent Airport, Wichita, Kansas 67209; telephone: (316) 946–4125; facsimile: (316) 946–4107.

SUPPLEMENTARY INFORMATION:

Comments Invited

How Do I Comment on This Proposed AD?

The FAA invites comments on this proposed rule. You may submit whatever written data, views, or arguments you choose. You need to include the rule's docket number and submit your comments to the address specified under the caption **ADDRESSES**.

We will consider all comments received on or before the closing date. We may amend this proposed rule in light of comments received. Factual information that supports your ideas and suggestions is extremely helpful in evaluating the effectiveness of this proposed AD action and determining whether we need to take additional rulemaking action.

Are There Any Specific Portions of This Proposed AD I Should Pay Attention to?

The FAA specifically invites comments on the overall regulatory, economic, environmental, and energy aspects of this proposed rule that might suggest a need to modify the rule. You may view all comments we receive before and after the closing date of the rule in the Rules Docket. We will file a report in the Rules Docket that summarizes each contact we have with the public that concerns the substantive parts of this proposed AD.

How Can I Be Sure FAA Receives My Comment?

If you want FAA to acknowledge the receipt of your mailed comments, you must include a self-addressed, stamped postcard. On the postcard, write ''Comments to Docket No. 2002–CE–05–AD.'' We will date stamp and mail the postcard back to you.

Discussion

Has FAA Taken Any Action to This Point?

Reports of fatigue cracks on Cessna 401, 402, and 411 series airplanes caused FAA to take AD action (AD 79–10–15 R2, Amendment 39–3711) to require repetitive inspections of the right and left wing spar lower cap areas for fatigue cracks and to require wing spar cap repair or replacement as necessary.

Accomplishment of the inspections required by AD 79–10–15 R2 is required in accordance with Cessna Service Bulletin ME79–16, Revision 3, dated February 8, 1980.

AD 79–10–15 R2 allowed for the incorporation of Cessna Service Kit SK402–36 or SK411–56 on the front wing spar lower cap as terminating action for the repetitive inspections on the applicable wing.

What Has Happened Since AD 79–10–15 R2 To Initiate This Proposed Action?

Since issuance of AD 79–10–15, Cessna has analyzed the wing, including fatigue and crack growth analyses, on the affected airplanes. Analysis included:

—A determination of the probable location and modes of damage based on analytical results, available test data, and service information;

—Classical fatigue analyses;

—Crack growth and residual strength analyses including use of linear elastic fracture mechanics methods;

—Full-scale ground testing to validate analytical models; and

—A flight strain survey to develop stress spectra used in the analyses.

The inspections required by AD 79–10–15 R2 in accordance with Cessna Service Bulletin ME79–16, Revision 3, are accomplished using a surface eddy current inspection method.

Based on the analysis, Cessna has found that the eddy current method will not find the crack until it is .03 inch longer than the critical crack length. When the crack reaches the critical length, it is not reliably detectable because it is under the head of the fastener. Once the main spar cap is severed, the remaining structure will no longer meet the residual strength requirements. Wing separation could then occur under loading conditions significantly less than those established for the design limit load.

Cessna reported only one instance where cracks were detected using the nondestructive inspection (NDI) eddy current procedure. There are other reported instances where cracks were detected visually in the wheel well area on the aft flange. The problem with visual inspections is the access doubler flanges cover a large percentage of the forward spar flange. This limits the effectiveness of the visual inspections.

To meet industry NDI standards, cracks need to be found on Cessna Models 401, 401A, 401B, 402, 402A, 402B, 411, and 411A airplanes through NDI inspection methods with a 90-percent probability of detection at a 95-percent confidence level.

Cessna's analysis indicates that the probability and confidence levels are not being met.

Is There Service Information That Applies to This Subject?

Cessna has issued the following:

—Service Bulletin MEB01–06 and Service Kit SK402–46, both dated September 24, 2001; and

—Service Bulletin MEB01–07 and Service Kit SK411–59, both dated September 24, 2001.

This service information includes procedures for inspecting and modifying the lower wing spar caps.

The FAA's Determination and an Explanation of the Provisions of This Proposed AD

What Has FAA Decided?

After examining the circumstances and reviewing all available information related to the incidents described above, we have determined that:

—Cessna's analysis of the problems with the eddy current inspection on the wing spar cap area on the Cessna 401, 402, and 411 series airplanes is valid;

—The unsafe condition referenced in this document exists or could develop on these airplanes that are the same type design;

—The actions specified in the previously-referenced service information should be accomplished on the affected airplanes; and

—AD action should be taken in order to correct this unsafe condition.

What Would This Proposed AD Require?

This proposed AD would supersede AD 79–10–15 R2 with a new AD that would require you to either (depending on the aircraft configuration):

—*For airplanes that do not incorporate one of certain Cessna Service Kits:* repetitively inspect the wing spar caps for fatigue cracks and repair or replace the wing spar caps as necessary and incorporate a spar strap modification on each wing spar; or

—*For airplanes that incorporate one of certain Cessna Service Kits:* repetitively inspect the wing spar caps for fatigue cracks and repair or replace the wing spar caps as necessary.

How Does the Revision to 14 CFR Part 39 Affect This Proposed AD?

On July 10, 2002, FAA published a new version of 14 CFR part 39 (67 FR 47997, July 22, 2002), which governs FAA's AD system. This regulation now includes material that relates to special flight permits, alternative methods of compliance, and altered products. This material previously was included in each individual AD. Since this material is included in 14 CFR part 39, we will not include it in future AD actions.

Cost Impact

How Many Airplanes Would This Proposed AD Impact?

We estimate that this proposed AD affects 400 airplanes in the U.S. registry.

What Would Be the Cost Impact of This Proposed AD on Owners/Operators of the Affected Airplanes?

We estimate the following costs to accomplish the proposed modification and initial inspection:

Labor cost	Parts cost	Total cost per airplane	Total cost on U.S. operators
485 workhours × $60 per hour = $29,100 per airplane.	$1,763 per airplane	$29,100 + $1,763 = $30,863 per airplane.	$30,863 × 400 = $12,345,200.

The above figures do not take into account the cost of repetitive inspections. The FAA does not have any way of determining the number of repetitive inspections each owner/operator would incur during the operating life of the affected airplanes.

Regulatory Impact

Would This Proposed AD Impact Various Entities?

The regulations proposed herein would not have a substantial direct effect on the States, on the relationship between the national government and the States, or on the distribution of power and responsibilities among the various levels of government. Therefore, it is determined that this proposed rule would not have federalism implications under Executive Order 13132.

Would This Proposed AD Involve a Significant Rule or Regulatory Action?

For the reasons discussed above, I certify that this proposed action (1) is not a ''significant regulatory action'' under Executive Order 12866; (2) is not a ''significant rule'' under DOT Regulatory Policies and Procedures (44 FR 11034, February 26, 1979); and (3) if promulgated, will not have a significant economic impact, positive or negative, on a substantial number of small entities under the criteria of the Regulatory Flexibility Act. A copy of the draft regulatory evaluation prepared for this action has been placed in the Rules Docket. A copy of it may be obtained by contacting the Rules Docket at the location provided under the caption **ADDRESSES**.

List of Subjects in 14 CFR Part 39

Air transportation, Aircraft, Aviation safety, Safety.

The Proposed Amendment

Accordingly, under the authority delegated to me by the Administrator, the Federal Aviation Administration proposes to amend part 39 of the Federal Aviation Regulations (14 CFR part 39) as follows:

PART 39—AIRWORTHINESS DIRECTIVES

1. The authority citation for part 39 continues to read as follows:

Authority: 49 U.S.C. 106(g), 40113, 44701.

§ 39.13 [Amended]

2. FAA amends § 39.13 by removing Airworthiness Directive (AD) 79–10–15 R2, Amendment 39–3711, and by adding a new AD to read as follows:

Cessna Aircraft Company: Docket No. 2002–CE–05–AD; Supersedes AD 79–10–15 R2, Amendment 39–3711.

(a) *What airplanes are affected by this AD?* This AD affects Models 401, 401A, 401B, 402, 402A, 402B, 411, and 411A airplanes, all serial numbers, that are certificated in any category.

(b) *Who must comply with this AD?* Anyone who wishes to operate any of the airplanes identified in paragraph (a) of this AD must comply with this AD.

(c) *What problem does this AD address?* The actions specified by this AD are intended to prevent wing spar cap failure due to undetected fatigue cracks. Such failure could result in loss of a wing with consequent loss of airplane control.

(d) *What actions must I accomplish to address this problem?* To address this problem, you must repetitively inspect the wing spar caps for fatigue cracks and repair or replace the wing spar caps as necessary and incorporate a spar strap modification (as specified) on each wing spar in accordance with Cessna Service Bulletin MEB01–6 and Cessna Service Kit SK402–46, both dated September 24, 2001; or Cessna Service Bulletin MEB01–7 and Cessna Service Kit SK411–59, both dated September 24, 2001, as follows:

Initial and repetitive compliance times	Affected airplanes
(1) Inspect and modify at whichever of the following that occurs later and repair or replace as necessary prior to further flight after the inspection, unless already accomplished, and repetitively inspect at the intervals specified in paragraphs (d)(3)(i), (d)(3)(ii), and (d)(3)(iii) of this AD: (i) Upon accumulating 5,500 hours time-in-service (TIS) on a wing spar; or (ii) Within the next 200 hours TIS after the effective date of this AD or 12 months after the effective date of this AD, whichever occurs first.	Cessna Models 411 and 411A airplanes that do not incorporate Cessna Service Kit SK411–56, SK411–56A, or SK411–56B.
(2) Inspect and modify at whichever of the following that occurs first and repair or replace as necessary prior to further flight after the inspection, unless already accomplished, and repetitively inspect at the intervals specified in paragraphs (d)(4)(i) and (d)(4)(ii) of this AD: (i) Upon accumulating 6,500 hours TIS on a wing spar; or (ii) Within the next 200 hours TIS after the effective date of this AD or 12 months after the effective date of this AD, whichever occurs first.	Cessna Models 401, 401A, 401B, 402, 402A, and 402B airplanes that do not incorporate Cessna Service or Kit SK402–36, SK402–36A, (SK402–36B, or SK402–36C.

Initial and repetitive compliance times	Affected airplanes
(3) Inspect in the following areas (modification not required for these airplanes) and repair or replace as necessary prior to further flight after the inspection where cracks are found. Inspection areas are defined in the Cessna Model 411 Supplemental Inspection Document (SID): (i) *Area "A" (Inspection ID 57–10–11):* Initially upon accumulating 5,400 hours TIS after incorporating the applicable service kit on a wing spar or within the next 100 hours TIS after the effective date of this AD, whichever occurs later, unless already accomplished, and thereafter at intervals not to exceed 2,500 hours TIS. (ii) *Area "B" (Inspection ID 57–10–12):* Initially upon accumulating 5,400 hours TIS after incorporating the applicable service kit on a wing spar or within the next 100 hours TIS after the effective date of this AD, whichever occurs later, unless already accomplished, and thereafter at intervals not to exceed 1,000 hours TIS. (iii) *Area "C" (Inspection ID 57–10–08):* Upon accumulating 19,900 hours TIS after incorporating the applicable service kit on a wing spar or within the next 100 hours TIS after the effective date of this AD, whichever occurs later, unless already accomplished, and thereafter at intervals not to exceed 2,000 hours TIS.	Cessna Models 411 and 411A airplanes that incorporate Cessna Service Kit SK411–56, SK411–56A, SK411–56B, or SK411–59. This includes airplanes that had Cessna Service Kit SK411–59 incorporated as required by paragraph (d)(1) of this AD.
(4) Inspect in the following areas (modification not required for these airplanes) and repair or replace as necessary prior to further flight after the inspection. Inspection areas are defined in the Cessna Model 401/402 Supplemental Inspection Document (SID): (i) *Area "A" (Inspection ID 57–10–11) and Area "B" (Inspection ID 57–10–12):* Initially upon accumulating 7,400 hours TIS after incorporating the applicable service kit on a wing spar or within the next 100 hours TIS after the effective date of this AD, whichever occurs later, unless already accomplished, and thereafter at intervals not to exceed 5,000 hours TIS. (ii) *Area "C" (Inspection ID 57–10–08):* Initially upon accumulating 19,900 hours TIS after incorporating the applicable service kit on a wing spar or within the next 100 hours TIS after the effective date of this AD, whichever occurs later, unless already accomplished, and thereafter at intervals not to exceed 2,500 hours TIS.	Cessna Models 401, 401A, 401B, 402, 402A, and 402B airplanes that incorporate Cessna Service Kit SK402–36, SK402–36A, SK402–36B, SK402–36C, or SK402–46. This includes airplanes that had Cessna Service Kit SK402–46 incorporated as required by paragraph (d)(2) of this AD.

(e) *Can I comply with this AD in any other way?*

(1) To use an alternative method of compliance or adjust the compliance time, follow the procedures in 14 CFR 39.19. Send these requests to the Manager, Wichita Aircraft Certification Office (ACO). For information on any already approved alternative methods of compliance, contact Paul Nguyen, Aerospace Engineer, FAA, Wichita Aircraft Certification Office, 1801 Airport Road, Mid-Continent Airport, Wichita, Kansas 67209; telephone: (316) 946–4125; facsimile: (316) 946–4107.

(2) Alternative methods of compliance approved in accordance with AD 79–10–15 R2, which is superseded by this AD, are not approved as alternative methods of compliance with this AD.

(f) *How do I get copies of the documents referenced in this AD?* You may get copies of the documents referenced in this AD from the Cessna Aircraft Company, Product Support, PO Box 7706, Wichita, Kansas 67277; telephone: (316) 517–5800; facsimile: (316) 942–9006. You may view these documents at FAA, Central Region, Office of the Regional Counsel, 901 Locust, Room 506, Kansas City, Missouri 64106.

(g) *Does this AD action affect any existing AD actions?* This amendment supersedes AD 79–10–15 R2, Amendment 39–3711.

Issued in Kansas City, Missouri, on May 9, 2003.

James E. Jackson,

Acting Manager, Small Airplane Directorate, Aircraft Certification Service.

[FR Doc. 03–12113 Filed 5–14–03; 8:45 am]

BILLING CODE 4910–13–P

DEPARTMENT OF TRANSPORTATION

Federal Aviation Administration

14 CFR Part 39

[Docket No. 2003–CE–20–AD]

RIN 2120–AA64

Airworthiness Directives; Dornier Luftfahrt GMBH Models 228–100, 228–101, 228–200, 228–201, 228–202, and 228–212 Airplanes

AGENCY: Federal Aviation Administration, DOT.

ACTION: Notice of proposed rulemaking (NPRM).

SUMMARY: This document proposes to adopt a new airworthiness directive (AD) that would apply to certain Dornier Luftfahrt GMBH (Dornier) Models 228–100, 228–101, 228–200, 228–201, 228–202, and 228–212 airplanes that have electrical cabin/cockpit heater option P05 or option P09 installed. This proposed AD would require you to modify the cockpit and cabin auxiliary heating wiring. This proposed AD is the result of mandatory continuing airworthiness information (MCAI) issued by the airworthiness authority for Germany. The actions specified by this proposed AD are intended to correct problems with the current design of the heater wiring, which could result in failure of the auxiliary cabin heater. Such failure could lead to overheating and smoke in the cockpit.

DATES: The Federal Aviation Administration (FAA) must receive any comments on this proposed rule on or before June 23, 2003.

ADDRESSES: Submit comments to FAA, Central Region, Office of the Regional Counsel, Attention: Rules Docket No. 2003–CE–20–AD, 901 Locust, Room 506, Kansas City, Missouri 64106. You may view any comments at this location between 8 a.m. and 4 p.m., Monday through Friday, except Federal holidays. You may also send comments electronically to the following address: *9–ACE–7–Docket@faa.gov.* Comments sent electronically must contain "Docket No. 2003–CE–20–AD" in the subject line. If you send comments electronically as attached electronic

files, the files must be formatted in Microsoft Word 97 for Windows or ASCII text.

You may get service information that applies to this proposed AD from Dornier Luftfahrt GMBH, Customer Support, P.O. Box 1103, D–82230 Wessling, Federal Republic of Germany; telephone: (08153) 300; facsimile: (08153) 304463. You may also view this information at the Rules Docket at the address above.

FOR FURTHER INFORMATION CONTACT: Karl Schletzbaum, Aerospace Engineer, FAA, Small Airplane Directorate, 901 Locust, Room 301, Kansas City, Missouri 64106; telephone: (816) 329–4146; facsimile: (816) 329–4090.

SUPPLEMENTARY INFORMATION:

Comments Invited

How do I comment on this proposed AD? The FAA invites comments on this proposed rule. You may submit whatever written data, views, or arguments you choose. You need to include the proposed rule's docket number and submit your comments to the address specified under the caption **ADDRESSES**. We will consider all comments received on or before the closing date. We may amend this proposed rule in light of comments received. Factual information that supports your ideas and suggestions is extremely helpful in evaluating the effectiveness of this proposed AD action and determining whether we need to take additional rulemaking action.

Are there any specific portions of this proposed AD I should pay attention to? The FAA specifically invites comments on the overall regulatory, economic, environmental, and energy aspects of this proposed rule that might suggest a need to modify the rule. You may view all comments we receive before and after the closing date of the rule in the Rules Docket. We will file a report in the Rules Docket that summarizes each contact we have with the public that concerns the substantive parts of this proposed AD.

How can I be sure FAA receives my comment? If you want FAA to acknowledge the receipt of your mailed comments, you must include a self-addressed, stamped postcard. On the postcard, write ''Comments to Docket No. 2003–CE–20–AD.'' We will date stamp and mail the postcard back to you.

Discussion

What events have caused this proposed AD? The Luftfahrt-Bundesamt (LBA), which is the airworthiness authority for Germany, recently notified FAA that an unsafe condition may exist on certain Dornier Models 228–100, 228–101, 228–200 and 228–201, 228–202, and 228–212 airplanes. The LBA reports an occurrence of stuck contacts of the power relay of the heating circuit to the auxiliary cabin heater, Dornier option P05 or P09.

What are the consequences if the condition is not corrected? Failure of the auxiliary cabin heater could lead to overheating and smoke in the cockpit.

Is there service information that applies to this subject? Dornier has issued Service Bulletin No. 228–249, Revision No. 1, dated November 19, 2001.

What are the provisions of this service information? The service bulletin includes procedures for modifying the auxiliary cabin heater wiring.

What action did the LBA take? The LBA classified this service bulletin as mandatory and issued German AD Number 2002–264, dated September 19, 2002, in order to ensure the continued airworthiness of these airplanes in Germany.

Was this in accordance with the bilateral airworthiness agreement? These airplane models are manufactured in Germany and are type certificated for operation in the United States under the provisions of section 21.29 of the Federal Aviation Regulations (14 CFR 21.29) and the applicable bilateral airworthiness agreement.

Pursuant to this bilateral airworthiness agreement, the LBA has kept FAA informed of the situation described above.

The FAA's Determination and an Explanation of the Provisions of This Proposed AD

What has FAA decided? The FAA has examined the findings of the LBA; reviewed all available information, including the service information referenced above; and determined that:

—The unsafe condition referenced in this document exists or could devlop on other Dornier Models 228–100, 228–101, 228–200 and 228–201, 228–202, and 228–212 airplanes of the same type design that are on the U.S. registry;

—The actions specified in the previously-referenced service information should be accomplished on the affected airplanes; and

—AD action should be taken in order to correct this unsafe condition.

What would this proposed AD require? This proposed AD would require you to incorporate the actions in the previously-referenced service bulletin.

How does the revision to 14 CFR part 39 affect this proposed AD? On July 10, 2002, FAA published a new version of 14 CFR part 39 (67 FR 47997, July 22, 2002), which governs FAA's AD system. This regulation now includes material that relates to special flight permits, alternative methods of compliance, and altered products. This material previously was included in each individual AD. Since this material is included in 14 CFR part 39, we will not include it in future AD actions.

Cost Impact

How many airplanes would this proposed AD impact? We estimate that this proposed AD affects 14 airplanes in the U.S. registry.

What would be the cost impact of this proposed AD on owners/operators of the affected airplanes? We estimate the following costs to accomplish this proposed modification. We have no way of determining the number of airplanes that may need such modification:

Labor cost	Parts cost	Total cost per airplane
3 workhours × $60 per hour = $180	$95.	$275.

Regulatory Impact

Would this proposed AD impact various entities? The regulations proposed herein would not have a substantial direct effect on the States, on the relationship between the national government and the States, or on the distribution of power and responsibilities among the various levels of government. Therefore, it is determined that this proposed rule would not have federalism implications under Executive Order 13132.

Would this proposed AD involve a significant rule or regulatory action? For the reasons discussed above, I certify that this proposed action (1) is not a ''significant regulatory action'' under Executive Order 12866; (2) is not a ''significant rule'' under DOT

Regulatory Policies and Procedures (44 FR 11034, February 26, 1979); and (3) if promulgated, will not have a significant economic impact, positive or negative, on a substantial number of small entities under the criteria of the Regulatory Flexibility Act. A copy of the draft regulatory evaluation prepared for this action has been placed in the Rules Docket. A copy of it may be obtained by contacting the Rules Docket at the location provided under the caption **ADDRESSES**.

List of Subjects in 14 CFR Part 39

Air transportation, Aircraft, Aviation safety, Safety.

The Proposed Amendment

Accordingly, under the authority delegated to me by the Administrator, the Federal Aviation Administration proposes to amend part 39 of the Federal Aviation Regulations (14 CFR part 39) as follows:

PART 39—AIRWORTHINESS DIRECTIVES

1. The authority citation for part 39 continues to read as follows:

Authority: 49 U.S.C. 106(g), 40113, 44701.

§ 39.13 [Amended]

2. FAA amends § 39.13 by adding a new airworthiness directive (AD) to read as follows:

Dornier Luftfahrt GMBH: Docket No. 2003–CE–20–AD.

(a) *What airplanes are affected by this AD?* This AD affects Models 228–100, 228–101, 228–200, 228–201, 228–202, and 228–212 airplanes, all serial numbers, that are:

(1) certificated in any category; and

(2) equipped with electrical cabin/cockpit heater option P05 or option P09 auxiliary cabin heater(s) (32HA/35HA or 51HA/52HA).

(b) *Who must comply with this AD?* Anyone who wishes to operate any of the airplanes identified in paragraph (a) of this AD must comply with this AD.

(c) *What problem does this AD address?* The actions specified by this AD are intended to correct problems with the current design of the heater wiring, which could result in failure of the auxiliary cabin heater. Such failure could lead to overheating and smoke in the cockpit.

(d) *What actions must I accomplish to address this problem?* To address this problem, you must accomplish the following:

Actions	Compliance	Procedures
(1) Modify any installed cockpit and cabin auxiliary cabin heater (32HA/35HA or 51HA/52HA) heating wiring.	Within the next 50 hours time-in-service (TIS) after the effective date of this AD, unless already accomplished. Removal from the airplane of any unmodified auxiliary cabin heater (32HA/35HA or 51HA/52HA) or 51HA/52HA) is terminating action for this AD.	In accordance with Fairchild Dornier Dornier 228 Service Bulletin No. SB–228–249, Revision No. 1, dated November 19, 2001, and following standard practices.
(2) Do not install any auxiliary cabin heater (32HA/35HA or 51HA/52HA) (or FAA-approved equivalent part number) unless it has been modified as required in paragraph (d)(1) of this AD.	As of the effective date of this AD	Not applicable.

(e) *Can I comply with this AD in any other way?* To use an alternative method of compliance or adjust the compliance time, follow the procedures in 14 CFR 39.19. Send these requests to the Manager, Standards Office, Small Airplane Directorate. For information on any already approved alternative methods of compliance, contact Karl Schletzbaum, Aerospace Engineer, FAA, Small Airplane Directorate, 901 Locust, Room 301, Kansas City, Missouri 64106; telephone: (816) 329–4146; facsimile: (816) 329–4090.

(f) *How do I get copies of the documents referenced in this AD?* You may get copies of the documents referenced in this AD from Dornier Luftfahrt GmbH, Customer Support, P.O. Box 1103, D–82230 Wessling, Federal Republic of Germany; telephone: (08153) 300; facsimile: (08153) 304463. You may view these documents at FAA, Central Region, Office of the Regional Counsel, 901 Locust, Room 506, Kansas City, Missouri 64106.

Note: The subject of this AD is addressed in German AD Number 2002–264, dated September 19, 2002.

Issued in Kansas City, Missouri, on May 9, 2003.

James E. Jackson,

Acting Manager, Small Airplane Directorate, Aircraft Certification Service.

[FR Doc. 03–12112 Filed 5–14–03; 8:45 am]

BILLING CODE 4910–13–P

DEPARTMENT OF TRANSPORTATION

Federal Aviation Administration

14 CFR Part 39

[Docket No. 2002–CE–57–AD]

RIN 2120–AA64

Airworthiness Directives; Cessna Aircraft Company Models 402C and 414A Airplanes

AGENCY: Federal Aviation Administration, DOT.

ACTION: Notice of proposed rulemaking (NPRM).

SUMMARY: This document proposes to supersede Airworthiness Directive (AD) 2000–23–01, which applies to all Cessna Aircraft Company (Cessna) Model 402C airplanes. AD 2000–23–01 currently requires repetitive inspections of the forward, aft, and auxiliary wing spars for cracks, and repair or replacement as necessary. Cessna has performed fatigue and crack growth analyses of the wings of these airplanes, and the Federal Aviation Administration (FAA) has evaluated this information and determined that a wing spar modification and inspections are necessary on the Model 414A airplanes as well as the Model 402C airplanes. This proposed AD would require you to inspect the wing spar caps for fatigue cracks with any necessary repair or replacement and to incorporate a spar strap modification on each wing spar. The actions specified by this proposed AD are intended to prevent wing spar cap failure due to undetected fatigue cracks. Such failure could result in loss of a wing with consequent loss of airplane control.

DATES: The Federal Aviation Administration (FAA) must receive any comments on this proposed rule on or before August 8, 2003.

ADDRESSES: Submit comments to FAA, Central Region, Office of the Regional Counsel, Attention: Rules Docket No. 2002–CE–57–AD, 901 Locust, Room 506, Kansas City, Missouri 64106. You

may view any comments at this location between 8 a.m. and 4 p.m., Monday through Friday, except Federal holidays. You may also send comments electronically to the following address: *9–ACE–7–Docket@faa.gov.* Comments sent electronically must contain ''Docket No. 2002–CE–57–AD'' in the subject line. If you send comments electronically as attached electronic files, the files must be formatted in Microsoft Word 97 for Windows or ASCII text.

You may get service information that applies to this proposed AD from the Cessna Aircraft Company, Product Support, P.O. Box 7706, Wichita, Kansas 67277; telephone: (316) 517–5800; facsimile: (316) 942–9006. You may also view this information at the Rules Docket at the address above.

FOR FURTHER INFORMATION CONTACT: Paul Nguyen, Aerospace Engineer, FAA, Wichita Aircraft Certification Office, 1801 Airport Road, Mid-Continent Airport, Wichita, Kansas 67209; telephone: (316) 946–4125; facsimile: (316) 946–4107.

SUPPLEMENTARY INFORMATION:

Comments Invited

How do I comment on this proposed AD? The FAA invites comments on this proposed rule. You may submit whatever written data, views, or arguments you choose. You need to include the rule's docket number and submit your comments to the address specified under the caption **ADDRESSES**. We will consider all comments received on or before the closing date. We may amend this proposed rule in light of comments received. Factual information that supports your ideas and suggestions is extremely helpful in evaluating the effectiveness of this proposed AD action and determining whether we need to take additional rulemaking action.

Are there any specific portions of this proposed AD I should pay attention to? The FAA specifically invites comments on the overall regulatory, economic, environmental, and energy aspects of this proposed rule that might suggest a need to modify the rule. You may view all comments we receive before and after the closing date of the rule in the Rules Docket. We will file a report in the Rules Docket that summarizes each contact we have with the public that concerns the substantive parts of this proposed AD.

How can I be sure FAA receives my comment? If you want FAA to acknowledge the receipt of your mailed comments, you must include a self-addressed, stamped postcard. On the postcard, write ''Comments to Docket No. 2002–CE–57–AD.'' We will date stamp and mail the postcard back to you.

Discussion

Has FAA taken any action to this point? Reports of fatigue cracks on Cessna 401, 402, and 411 series airplanes caused FAA to take AD action (AD 79–10–15 R2, Amendment 39–3711) to require repetitive inspections of the right and left wing spar lower cap areas for fatigue cracks and to require wing spar cap repair or replacement as necessary.

Cessna Models 402C and 414A airplanes incorporate a similar design to those airplanes affected by AD 79–10–15 R2. We issued AD 2000–23–01, Amendment 39–11971 (65 FR 70645, November 27, 2000), to require repetitive inspections of the forward, aft, and auxiliary wing spars for cracks on Cessna Models 402C airplanes with repair or replacement as necessary.

There is no similar AD action addressing the Model 414A airplanes.

What has happened since AD 79–10–15 R2 and AD 2000–23–01 to initiate this proposed action? Since issuance of AD 79–10–15 and AD 2000–23–01, Cessna has analyzed the wing, including fatigue and crack growth analyses, on the affected airplanes. Analysis included:

—A determination of the probable location and modes of damage based on analytical results, available test data, and service information;
—Classical fatigue analyses;
—Crack growth and residual strength analyses including use of linear elastic fracture mechanics methods;
—Full-scale ground testing to validate analytical models; and
—A Flight strain survey to develop stress spectra used in the analyses.

The inspections required by AD 79–10–15 R2 in accordance with Cessna Service Bulletin ME79–16, Revision 3, are accomplished using a surface eddy current inspection method.

Based on the analysis, Cessna has found that the eddy current method will not find the crack until it is .03 inch longer than the critical crack length. When the crack reaches the critical length, it is not reliably detectable because it is under the head of the fastener. Once the main spar cap is severed, the remaining structure will no longer meet the residual strength requirements. Wing separation could then occur under loading conditions significantly less than those established for the design limit load.

Cessna reported only one instance where cracks were detected using the nondestructive inspection (NDI) eddy current procedure. There are other reported instances where cracks were detected visually in the wheel well area on the aft flange. The problem with visual inspections is the access doubler flanges cover a large percentage of the forward spar flange. This limits the effectiveness of the visual inspections.

To meet industry NDI standards, cracks need to be found on Cessna Models 402C and 414A airplanes through NDI inspection methods with a 90-percent probability of detection at a 95-percent confidence level.

Cessna's analysis indicates that the probability and confidence levels are not being met.

Is there service information that applies to this subject? Cessna has issued Service Bulletin MEB02–05 and Cessna Service Kit SK402–47, both dated June 24, 2002. This service information includes procedures for inspecting and modifying the lower wing spar caps.

The FAA's Determination and an Explanation of the Provisions of this Proposed AD

What has FAA decided? After examining the circumstances and reviewing all available information related to the incidents described above, we have determined that:

—Cessna's analysis of the problems with the eddy current inspection on the wing spar cap area on the Cessna Models 401, 401A, 401B, 402A, 402B, 411, and 411A airplane is valid;
—The unsafe condition referenced in this document also exists or could develop on Cessna Models 402C and 414A airplanes that are the same type design;
—The actions specified in the previously-referenced service information should be accomplished on the affected airplanes; and
—AD action should be taken in order to correct this unsafe condition.

What would this proposed AD require? This proposed AD would supersede AD 2000–23–01 with a new AD that would apply to Cessna Models 402C and 414A airplanes and would require you to:

—Inspect the wing spar caps for fatigue cracks;
—Repair or replace the wing spar caps as necessary; and
—Incorporate a spar strap modification on each wing spar.

How does the revision to 14 CFR part 39 affect this proposed AD? On July 10, 2002, FAA published a new version of 14 CFR part 39 (67 FR 47997, July 22, 2002), which governs FAA's AD system.

This regulation now includes material that relates to special flight permits, alternative methods of compliance, and altered products. This material previously was included in each individual AD. Since this material is included in 14 CFR part 39, we will not include it in future AD actions.

Cost Impact

How many airplanes would this proposed AD impact? We estimate that this proposed AD affects 656 airplanes in the U.S. registry.

What would be the cost impact of this proposed AD on owners/operators of the affected airplanes? We estimate the following costs to accomplish the proposed modification and initial inspection:

Labor cost	Parts cost	Total cost per airplane	Total cost on U.S. operators
485 workhours × $60 per hour = $29,100 per airplane.	$14,000 per airplane	$29,100 + $14,000 = $43,100 per airplane.	$43,100 × 656 = $28,273,600.

The above figures do not take into account the cost of repetitive inspections. The FAA does not have any way of determining the number of repetitive inspections each owner/operator would incur during the operating life of the affected airplanes.

Regulatory Impact

Would this proposed AD impact various entities? The regulations proposed herein would not have a substantial direct effect on the States, on the relationship between the national government and the States, or on the distribution of power and responsibilities among the various levels of government. Therefore, it is determined that this proposed rule would not have federalism implications under Executive Order 13132.

Would this proposed AD involve a significant rule or regulatory action? For the reasons discussed above, I certify that this proposed action (1) is not a ''significant regulatory action'' under Executive Order 12866; (2) is not a ''significant rule'' under DOT Regulatory Policies and Procedures (44 FR 11034, February 26, 1979); and (3) if promulgated, will not have a significant economic impact, positive or negative, on a substantial number of small entities under the criteria of the Regulatory Flexibility Act. A copy of the draft regulatory evaluation prepared for this action has been placed in the Rules Docket. A copy of it may be obtained by contacting the Rules Docket at the location provided under the caption **ADDRESSES**.

List of Subjects in 14 CFR Part 39

Air transportation, Aircraft, Aviation safety, Safety.

The Proposed Amendment

Accordingly, under the authority delegated to me by the Administrator, the Federal Aviation Administration proposes to amend part 39 of the Federal Aviation Regulations(14 CFR part 39) as follows:

PART 39—AIRWORTHINESS DIRECTIVES

■ 1. The authority citation for part 39 continues to read as follows:

Authority: 49 U.S.C. 106(g), 40113, 44701.

§ 39.13 [Amended]

■ 2. FAA amends § 39.13 by removing Airworthiness Directive (AD) 2000–23–01, Amendment 39–11971 (65 FR 70645, November 27, 2000), and by adding a new AD to read as follows:

Cessna Aircraft Company: Docket No. 2002-CE–57-AD; Supersedes AD 2000–23–01, Amendment 39–11971.

(a) *What airplanes are affected by this AD?* This AD affects Models 402C and 414A airplanes, all serial numbers, that are certificated in any category.

(b) *Who must comply with this AD?* Anyone who wishes to operate any of the airplanes identified in paragraph (a) of this AD must comply with this AD.

(c) *What problem does this AD address?* The actions specified by this AD are intended to prevent wing spar cap failure due to undetected fatigue cracks. Such failure could result in loss of a wing with consequent loss of airplane control.

(d) *What actions must I accomplish to address this problem?* To address this problem, you must inspect the wing spar caps for fatigue cracks and repair or replace the wing spar caps as necessary and incorporate a spar strap modification on each wing spar in accordance with Cessna Service Bulletin MEB02–5, dated June 24, 2002, and Cessna Service Kit SK402–47, dated June 24, 2002, as follows:

Compliance times	Affected airplanes
(1) Inspect and modify at whichever of the following that occurs later and repair or replace as necessary prior to further flight after the inspection, unless already accomplished (no repetitive actions necessary): (i) Upon accumulating 8,500 hours time-in-service (TIS) on a wing spar; or. (ii) Within the next 500 hours TIS after the effective date of this AD or 12 months after the effective date of this AD, whichever occurs first.	Cessna Models 402C and 414A airplanes, serial number 414A0001 through 414A0047 and 414A0049 through 414A0200.
(2) Inspect and modify at whichever of the following that occurs first and repair or replace as necessary prior to further flight after the inspection, unless already accomplished (no repetitive actions necessary): (i) Upon accumulating 14,500 hours TIS on a wing spar; or. (ii) Within the next 500 hours TIS after the effective date of this AD or 12 months after the effective date of this AD, whichever occurs first.	Cessna Models 402C and 414A airplanes, serial numbers 414A0201 through 414A1212.

(e) *Can I comply with this AD in any other way?*

(1) To use an alternative method of compliance or adjust the compliance time, follow the procedures in 14 CFR 39.19. Send these requests to the Manager, Wichita Aircraft Certification Office (ACO). For information on any already approved alternative methods of compliance, contact Paul Nguyen, Aerospace Engineer, FAA, Wichita Aircraft Certification Office, 1801 Airport Road, Mid-Continent Airport, Wichita, Kansas 67209; telephone: (316) 946–4125; facsimile: (316) 946–4107.

(2) Alternative methods of compliance approved in accordance with AD 2000–23–01 and AD 99–11–13 are not approved as alternative methods of compliance with this AD.

(f) *How do I get copies of the documents referenced in this AD?* You may get copies of

the documents referenced in this AD from the Cessna Aircraft Company, Product Support, P.O. Box 7706, Wichita, Kansas 67277; telephone: (316) 517–5800; facsimile: (316) 942–9006. You may view these documents at FAA, Central Region, Office of the Regional Counsel, 901 Locust, Room 506, Kansas City, Missouri 64106.

(g) *Does this AD action affect any existing AD actions?* This amendment supersedes AD 2000–23–01, Amendment 39–11971.

Issued in Kansas City, Missouri, on May 9, 2003.

James E. Jackson,

Acting Manager, Small Airplane Directorate, Aircraft Certification Service.

[FR Doc. 03–12111 Filed 5–14–03; 8:45 am]

BILLING CODE 4910–13–P

DEPARTMENT OF JUSTICE

Drug Enforcement Administration

21 CFR Part 1308

[Docket No. DEA–162W]

Schedules of Controlled Substances: Proposed Removal of Fenfluramine From the Controlled Substances Act; Withdrawal of Proposed Rule

AGENCY: Drug Enforcement Administration (DEA), Justice.

ACTION: Withdrawal of proposed rule.

SUMMARY: The Drug Enforcement Administration (DEA) is withdrawing a proposed rule that appeared in the **Federal Register** of May 6, 1997 (62 FR 24620) and is terminating the rulemaking. The proposed rule would have removed fenfluramine from schedule IV of the Controlled Substances Act. The drug's manufacturer has withdrawn its original petition that requested decontrol. DEA has determined that fenfluramine should remain in schedule IV due to the withdrawal of the petition, the removal of products containing the drug from the United States marketplace, and the public health and safety concerns expressed by the Department of Health and Human Services that arose after publication of the proposed rule.

FOR FURTHER INFORMATION CONTACT: Frank Sapienza, Chief, Drug and Chemical Evaluation Section, Drug Enforcement Administration, Washington, DC 20537, (202) 307–7183.

SUPPLEMENTARY INFORMATION: In 1973, fenfluramine, its salts, isomers and salts of isomers were placed into schedule IV of the Controlled Substances Act (CSA), 21 CFR 1308.14(d). On March 18, 1991, Interneuron Pharmaceuticals, Inc., the manufacturer of a fenfluramine product (dexfenfluramine, brand name Redux), petitioned DEA to decontrol fenfluramine. The fenfluramine product Redux, an anorectic indicated for the management of exogenous obesity, was approved by the Food and Drug Administration (FDA) of the Department of Health and Human Services (DHHS) for marketing in the United States in 1996. After receiving Interneuron's petition, and in accordance with the CSA requirements at 21 U.S.C. 811(b), DEA reviewed available data about fenfluramine. On June 3, 1996, the DHHS Assistant Secretary of Health submitted a recommendation to DEA that the substance be decontrolled. As a result of DEA's review and DHHS's recommendation, a notice of proposed rulemaking titled ''Schedules of Controlled Substances: Proposed Removal of Fenfluramine From the Controlled Substances Act'' was published on May 6, 1997 in the **Federal Register** (62 FR 24620). This notice of proposed rulemaking was in direct response to Interneuron's petition to decontrol fenfluramine. A sixty day comment period was provided during which four comments were received, two in favor of the proposed action and two against decontrol.

On July 8, 1997, two months after the proposed rulemaking was published, FDA issued a public health advisory regarding the use of fenfluramine, especially in conjunction with phentermine (commonly known as ''fen-phen''), citing evidence of significant side effects associated with fenfluramine. FDA announced a voluntary withdrawal by the pharmaceutical manufacturers of fenfluramine (brand name Pondimin) and dexfenfluramine (brand name Redux) from United States markets on September 15, 1997. DHHS issued a final rule on March 8, 1999 listing drug products that were withdrawn or removed from the market because they were found to be unsafe or not effective, including fenfluramine hydrochloride. (64 FR 10944). This regulation is codified at 21 CFR 216.24.

In a February 27, 2003 letter addressed to DEA's Acting Administrator, John B. Brown III, Indevus Pharmaceuticals, Inc., formerly known as Interneuron Pharmaceuticals, Inc., wrote to withdraw its petition to decontrol fenfluramine because the company no longer markets fenfluramine products in the United States.

As a result of the recent withdrawal of the petition and the earlier removal of the drug from the United States marketplace by FDA due to health and safety concerns, DEA now has reason to reconsider its proposed rulemaking. DEA no longer considers it appropriate to remove fenfluramine from schedule IV. The health and safety concerns that prompted the manufacturers' voluntary withdrawal of fenfluramine from the marketplace and DHHS's subsequent codification of this withdrawal, *see* 21 CFR 216.24, occurred after DEA's proposed rulemaking was published. Based on these events, DEA has determined that fenfluramine's current placement in schedule IV should not be altered. Accordingly, DEA withdraws the proposed rule published in the **Federal Register** on May 6, 1997 (62 FR 24620) and hereby terminates this rulemaking.

Dated: May 2, 2003.

John B. Brown, III,

Acting Administrator.

[FR Doc. 03–12150 Filed 5–14–03; 8:45 am]

BILLING CODE 4410–09–P

DEPARTMENT OF HOMELAND SECURITY

Coast Guard

33 CFR Part 165

[CGD05–03–023]

RIN 1625–AA00

Safety and Security Zone; Cove Point Liquefied Natural Gas Terminal, Chesapeake Bay, MD

AGENCY: Coast Guard, DHS.

ACTION: Notice of proposed rulemaking; notice of public meeting; reopening of comment period.

SUMMARY: On March 20, 2003, the U.S. Coast Guard Captain of the Port, Baltimore (COTP) published a notice of proposed rulemaking for revising a safety and security zone for the Cove Point Liquefied Natural Gas Terminal. In response to that notice, the COTP received requests for a public meeting to discuss the proposed rule. In this notice, the COTP is announcing a public meeting to receive comments regarding the proposed safety and security zone and is reopening the comment period for this rulemaking.

DATES: The meeting will be held Thursday, June 5, 2003, from 6 p.m. to 9 p.m. Comments and related material must reach the Coast Guard on or before June 12, 2003.

ADDRESSES: The meeting location is: The Holiday Inn, 155 Holiday Drive, Solomon's Island, Maryland. You may mail comments and related material to Commander, U.S. Coast Guard Activities, 2401 Hawkins Point Road,

Building 70, Port Safety, Security and Waterways Management Branch, Baltimore, Maryland, 21226–1791. The Port Safety, Security and Waterways Management Branch of Coast Guard Activities Baltimore maintains the public docket, CGD05–03–023, for this rulemaking. Comments and material received from the public, as well as documents indicated in this preamble as being available in the docket, will become part of this docket and will be available for inspection or copying at Commander, U.S. Coast Guard Activities, 2401 Hawkins Point Road, Building 70, Port Safety, Security and Waterways Management Branch, Baltimore, Maryland, 21226–1791 between 9 a.m. and 3 p.m., Monday through Friday, except Federal holidays.

FOR FURTHER INFORMATION CONTACT: Commander Gordon Loebl at U.S. Coast Guard Activities Baltimore (410) 576–2526.

SUPPLEMENTARY INFORMATION:

Background Information

On March 20, 2003, the Coast Guard published a notice of proposed rulemaking entitled ''Safety and Security Zone; Cove Point Liquefied Natural Gas Terminal, Chesapeake Bay, Maryland. (68 FR 13647). The Coast Guard received several requests for public meetings before the comment period closed on April 21, 2003. The Captain of the Port has decided that a public meeting is in the public's interest and is therefore issuing this notice to advise the public of the time and place of the meeting, and of the reopening of the comment period.

Public Meeting

The public meeting will be held June 5, 2003, from 6 p.m. to 9 p.m., at the Holiday Inn, 155 Holiday Drive, Solomon's Island, Maryland. Attendance is open to the public. During this meeting, the Coast Guard will receive comments from the public on the proposed rule for the safety and security zone.

With advance notice, members of the public may provide oral statements. Oral statements will be limited to five minutes. Persons wishing to make oral statements should notify Commander Gordon Loebl listed under **FOR FURTHER INFORMATION CONTACT** no later than two days before the meeting.

Written comments may be submitted to the docket under **ADDRESSES** 30 minutes before, during, or up to one week after the meeting. You may also submit written comments directly to Coast Guard personnel at the public meeting.

Information on Services for Individuals With Disabilities

For information on facilities or services for individuals with disabilities, or to request assistance at the meeting, contact Commander Gordon Loebl listed under **FOR FURTHER INFORMATION CONTACT** as soon as possible.

Dated: May 5, 2003.

Roger B. Peoples,

Captain, Coast Guard, Captain of the Port, Baltimore, MD.

[FR Doc. 03–12050 Filed 5–14–03; 8:45 am]

BILLING CODE 4910–15–P

ENVIRONMENTAL PROTECTION AGENCY

40 CFR Part 52

[SIP NO. UT–001–0052b; FRL–7483–5]

Approval and Promulgation of Air Quality Implementation Plans; State of Utah; Continuous Emission Monitoring Program

AGENCY: Environmental Protection Agency (EPA).

ACTION: Proposed rule.

SUMMARY: EPA is proposing to take direct final action approving State Implementation Plan (SIP) revisions submitted by the Governor of Utah on September 7, 1999 and February 11, 2003. The September 7, 1999 submittal revises Utah's Air Conservation Regulations (UACR) by repealing and re-enacting the Continuous Emission Monitoring Program (CEM) rule in order to clarify the requirements of the rule. The February 11, 2003 submittal makes additional revisions to the CEM rule to make it in agreement with Federal regulations and the Clean Air Act (CAA). The intended effect of this action is to make the CEM rule federally enforceable. This action is being taken under section 110 of the CAA.

In the ''Rules and Regulations'' section of this **Federal Register**, EPA is approving the State's SIP revision as a direct final rule without prior proposal because the Agency views this as a noncontroversial SIP revision and anticipates no adverse comments. A detailed rationale for the approval is set forth in the preamble to the direct final rule. If EPA receives no adverse comments, EPA will not take further action on this proposed rule. If EPA receives adverse comments, EPA will withdraw the direct final rule and it will not take effect. EPA will address all public comments in a subsequent final rule based on this proposed rule. EPA will not institute a second comment period on this action. Any parties interested in commenting must do so at this time. Please note that if EPA receives adverse comment on an amendment, paragraph, or section of this rule and if that provision may be severed from the remainder of the rule, EPA may adopt as final those provisions of the rule that are not the subject of an adverse comment.

DATES: Comments must be received in writing on or before June 16, 2003.

ADDRESSES: Written comments may be mailed to Richard R. Long, Director, Air and Radiation Program, Mailcode 8P–AR, Environmental Protection Agency (EPA), Region 8, 999 18th Street, Suite 300, Denver, Colorado, 80202. Copies of the documents relevant to this action are available for public inspection during normal business hours at the Air and Radiation Program, Environmental Protection Agency, Region 8, 999 18th Street, Suite 300, Denver, Colorado, 80202. Copies of the State documents relevant to this action are available for public inspection at the Utah Department of Environmental Quality, Division of Air Quality, 150 North 1950 West, Salt Lake City, Utah 84114.

FOR FURTHER INFORMATION CONTACT: Laurel Dygowski , EPA, Region 8, (303) 312–6144.

SUPPLEMENTARY INFORMATION: See the information provided in the Direct Final action of the same title which is located in the Rules and Regulations Section of this **Federal Register**.

Authority: 42 U.S.C. 7401 *et seq.*

Dated: April 3, 2003.

Robert E. Roberts,

Regional Administrator, Region 8.

[FR Doc. 03–12030 Filed 5–14–03; 8:45 am]

BILLING CODE 6560–50–P

ENVIRONMENTAL PROTECTION AGENCY

40 CFR Parts 52 and 81

[CO–001–0070b; FRL–7489–3]

Approval and Promulgation of Air Quality Implementation Plan; Colorado; Designation of Area for Air Quality Planning Purposes, Aspen

AGENCY: Environmental Protection Agency (EPA).

ACTION: Proposed rule.

SUMMARY: EPA is proposing to approve a State Implementation Plan (SIP) revision submitted by the Governor of the State of Colorado on November 9, 2001, for the purpose of redesignating

the Aspen, Colorado area from nonattainment to attainment for particulate matter with an aerodynamic diameter less than or equal to a nominal 10 micrometers (PM_{10}) under the 1987 standards. The Governor's submittal, among other things, documents that the Aspen area has attained the PM_{10} national ambient air quality standards (NAAQS), requests redesignation to attainment, and includes a maintenance plan for the area demonstrating maintenance of the PM_{10} NAAQS for 10 years. EPA is proposing to approve this redesignation request and maintenance plan because Colorado has met the applicable requirements of the Clean Air Act (CAA), as amended. Subsequent to this approval, the Aspen area would be designated attainment for the PM_{10} NAAQS. This action is being taken under sections 107, 110, and 175A of the Clean Air Act. In the ''Rules and Regulations'' section of this **Federal Register**, EPA is approving the State's SIP revision as a direct final rule without prior proposal because the Agency views this as a noncontroversial SIP revision and anticipates no adverse comments. A detailed rationale for the approval is set forth in the preamble to the direct final rule. If EPA receives no adverse comments, EPA will not take further action on this proposed rule. If EPA receives adverse comments, EPA will withdraw the direct final rule and it will not take effect. EPA will address all public comments in a subsequent final rule based on this proposed rule. EPA will not institute a second comment period on this action. Any parties interested in commenting must do so at this time. Please note that if EPA receives adverse comment on an amendment, paragraph, or section of this and if that provision may be severed from the remainder of the rule, EPA may adopt as final those provisions of the rule that are not the subject of an adverse comment.

DATES: Comments must be received in writing on or before June 16, 2003.

ADDRESSES: Written comments may be mailed to Richard R. Long, Director, Air and Radiation Program, Mailcode 8P–AR, Environmental Protection Agency (EPA), Region VIII, 999 18th Street, Suite 300, Denver, Colorado, 80202. Copies of the documents relevant to this action are available for public inspection during normal business hours at the Air and Radiation Program, Environmental Protection Agency, Region VIII, 999 18th Street, Suite 300, Denver, Colorado, 80202. Copies of the State documents relevant to this action are available for public inspection at the Colorado Department of Public Health and Environment, Air Quality Control Commission, 4300 Cherry Creek Drive South, Denver, Colorado 80246–1530.

FOR FURTHER INFORMATION CONTACT: Libby Faulk, EPA, Region VIII, (303) 312–6083.

SUPPLEMENTARY INFORMATION: *See* the information provided in the Direct Final action of the same title which is located in the Rules and Regulations section of this **Federal Register**.

Authority: 42 U.S.C. 7401 *et seq.*

Dated: April 18, 2003.

Robert E. Roberts,

Regional Administrator, Region 8.

[FR Doc. 03–12025 Filed 5–14–03; 8:45 am]

BILLING CODE 6560–50–P

ENVIRONMENTAL PROTECTION AGENCY

40 CFR Part 63

[Docket ID No. OAR–2002–0044; FRL –7497–8]

RIN 2060–AF31

National Emission Standards for Hazardous Air Pollutants for Source Categories: General Provisions

AGENCY: Environmental Protection Agency (EPA).

ACTION: Proposed rule; amendments.

SUMMARY: On March 16, 1994, the EPA promulgated General Provisions for national emission standards for hazardous air pollutants (NESHAP) and other regulatory requirements that are established under section 112 of the Clean Air Act (CAA). On April 5, 2002, we amended the General Provisions to revise and clarify several of the requirements. In this action, we are proposing additional amendments that would provide regulatory relief, where appropriate, to facilities that use pollution prevention (P2) to achieve and maintain hazardous air pollutant (HAP) emissions reductions equivalent to or better than the maximum achievable control technology (MACT) level of control required under applicable NESHAP.

We are proposing these amendments to encourage and promote pollution prevention, which is our strategy of first choice for reducing HAP emissions. EPA is also proposing additional incentives specifically designed for, and only available to, facilities that are members of the National Environmental Performance Track program (Performance Track). The Performance Track program recognizes and encourages top environmental performers; those who go beyond compliance with regulatory requirements to attain levels of environmental performance and management that provide greater benefit to people, communities, and the environment.

DATES: *Comments.* Submit comments on or before July 14, 2003.

Public Hearing. If anyone contacts the EPA requesting to speak at a public hearing by June 5, 2003, a public hearing will be held on June 12, 2003.

ADDRESSES: *Comments.* The official public docket is the collection of materials that is available for public viewing at the EPA Docket Center (EPA/DC), EPA West, Room B102, 1301 Constitution Ave., NW., Washington, DC.

Public Hearing. If a public hearing is requested, it will be held at the new EPA facility complex in Research Triangle Park, NC at 10 a.m. Persons interested in attending the hearing or wishing to present oral testimony should notify Dorothy Apple, Policy, Planning, and Standards Group (MD-C439–04), U.S. EPA, Research Triangle Park, NC 27711, telephone (919) 541–4487 at least 2 days in advance of the hearing.

FOR FURTHER INFORMATION CONTACT: Steve Fruh, Policy, Planning, and Standards Group (MD–C439–04), Emission Standards Division, Office of Air Quality Planning and Standards, U.S. EPA, Research Triangle Park, NC 27711, telephone (919) 541–2837, electronic mail (e-mail) address, *fruh.steve@epa.gov.*

SUPPLEMENTARY INFORMATION: *Regulated Entities.* Categories and entities potentially affected by this action include all source categories listed pursuant to section 112(c) and (k) of the CAA:

Industry Group: Source Categories With Major and Area Sources

Fuel Combustion

Combustion Turbines
Engine Test Facilities
Industrial Boilers
Process Heaters
Reciprocating Internal Combustion Engines
Rocket Testing Facilities

Non-Ferrous Metals Processing

Primary Aluminum Production
Primary Copper Smelting
Primary Lead Smelting
Primary Magnesium Refining
Secondary Aluminum Production
Secondary Lead Smelting

Ferrous Metals Processing

Coke By-Product Plants
Coke Ovens: Charging, Top Side, and Door Leaks
Coke Ovens: Pushing, Quenching, Battery Stacks
Ferroalloys Production: Silicomanganese and Ferromanganese
Integrated Iron and Steel Manufacturing
Iron Foundries Electric Arc Furnace (EAF) Operation
Steel Foundries
Steel Pickling—HCl Process Facilities and Hydrochloric Acid Regeneration

Mineral Products Processing

Alumina Processing
Asphalt Concrete Manufacturing
Asphalt Processing
Asphalt Roofing Manufacturing
Asphalt/Coal Tar Application—Metal Pipes
Clay Products Manufacturing
Lime Manufacturing
Mineral Wool Production
Portland Cement Manufacturing
Refractories Manufacturing
Taconite Iron Ore Processing
Wool Fiberglass Manufacturing

Petroleum and Natural Gas Production and Refining

Oil and Natural Gas Production
Natural Gas Transmission and Storage
Petroleum Refineries—Catalytic Cracking (Fluid and other) Units, Catalytic Reforming Units, and Sulfur Plant Units
Petroleum Refineries—Other Sources Not Distinctly Listed

Liquids Distribution

Gasoline Distribution (Stage 1)
Marine Vessel Loading Operations
Organic Liquids Distribution (Non-Gasoline)

Surface Coating Processes

Aerospace Industries
Auto and Light Duty Truck
Large Appliance
Magnetic Tapes
Manufacture of Paints, Coatings, and Adhesives
Metal Can
Metal Coil
Metal Furniture
Miscellaneous Metal Parts and Products
Paper and Other Webs
Plastic Parts and Products
Printing, Coating, and Dyeing of Fabrics
Printing/Publishing
Shipbuilding and Ship Repair
Wood Building Products
Wood Furniture

Waste Treatment and Disposal

Hazardous Waste Incineration
Municipal Landfills
Off-Site Waste and Recovery Operations
Publicly Owned Treatment Works (POTW) Emissions
Sewage Sludge Incineration
Site Remediation
Solid Waste Treatment, Storage and Disposal Facilities (TSDF)

Agricultural Chemicals Production

Pesticide Active Ingredient Production

Fibers Production Processes

Acrylic Fibers/Modacrylic Fibers Production
Rayon Production
Spandex Production

Food and Agriculture Processes

Manufacturing of Nutritional Yeast
Cellulose Food Casing Manufacturing
Vegetable Oil Production

Pharmaceutical Production Processes

Pharmaceuticals Production

Polymers and Resins Production

Acetal Resins Production
Acrylonitrile-Butadiene-Styrene Production
Alkyd Resins Production
Amino Resins Production
Boat Manufacturing
Butyl Rubber Production
Carboxymethylcellulose Production
Cellophane Production
Cellulose Ethers Production
Epichlorohydrin Elastomers Production
Epoxy Resins Production
Ethylene-Propylene Rubber Production
Flexible Polyurethane Foam Production
Hypalon (tm) Production
Maleic Anhydride Copolymers Production
Methylcellulose Production
Methyl Methacrylate-Acrylonitrile-Butadiene-Styrene Production
Methyl Methacrylate-Butadiene-Styrene Terpolymers Production
Neoprene Production
Nitrile Butadiene Rubber Production
Nitrile Resins Production
Non-Nylon Polyamides Production
Phenolic Resins Production
Polybutadiene Rubber Production
Polycarbonates Production
Polyester Resins Production
Polyether Polyols Production
Polyethylene Terephthalate Production
Polymerized Vinylidene Chloride Production
Polymethyl Methacrylate Resins Production
Polystyrene Production
Polysulfide Rubber Production
Polyvinyl Acetate Emulsions Production
Polyvinyl Alcohol Production
Polyvinyl Butyral Production
Polyvinyl Chloride and Copolymers Production
Reinforced Plastic Composites Production
Styrene-Acrylonitrile Production
Styrene-Butadiene Rubber and Latex Production

Production of Inorganic Chemicals

Ammonium Sulfate Production—Caprolactam By-Product Plants
Carbon Black Production
Chlorine Production
Cyanide Chemicals Manufacturing
Fumed Silica Production
Hydrochloric Acid Production
Hydrogen Fluoride Production
Phosphate Fertilizers Production
Phosphoric Acid Manufacturing
Uranium Hexafluoride Production

Production of Organic Chemicals

Ethylene Processes
Quaternary Ammonium Compounds Production
Synthetic Organic Chemical

Miscellaneous Processes

Benzyltrimethylammonium Chloride Production
Butadiene Dimers Production
Carbonyl Sulfide Production
Cellulosic Sponge Manufacturing
Chelating Agents Production
Chlorinated Paraffins
Chromic Acid Anodizing
Commercial Dry Cleaning (Perchloroethylene)—Transfer Machines
Commercial Sterilization Facilities
Decorative Chromium Electroplating
Dry Cleaning (Petroleum Solvent)
Ethylidene Norbornene Production
Explosives Production
Flexible Polyurethane Foam Fabrication Operations
Friction Products Manufacturing
Halogenated Solvent Cleaners
Hard Chromium Electroplating
Hydrazine Production
Industrial Cleaning (Perchloroethylene)—Dry-to-dry Machines
Industrial Dry Cleaning (Perchloroethylene)—Transfer Machines
Industrial Process Cooling Towers
Leather Tanning and Finishing Operations
OBPA/1,3-Diisocyanate Production
Paint Stripping Operations
Photographic Chemicals Production
Phthalate Plasticizers Production
Plywood and Composite Wood Products
Polyether Polyols Production
Pulp and Paper Production
Rubber Chemicals Manufacturing
Rubber Tire Manufacturing
Semiconductor Manufacturing
Symmetrical Tetrachloropyridine Production

Categories With Area Sources Only

Agriculture Chemicals & Pesticides Manufacturing
Autobody Refinishing Paint Shops
Cadmium Refining & Cadmium Oxide Production
Cyclic Crude and Intermediate Production
Hospital Sterilizers
Industrial Inorganic Chemical Manufacturing
Industrial Organic Chemical Manufacturing
Lead and Acid Battery Manufacturing
Medical Waste Incinerators
Mercury Cell Chlor-Alkali Plants
Miscellaneous Organic Chemical Manufacturing (MON)
Municipal Waste Combustors
Other Solid Waste Incinerators (Human/Animal Cremation)
Plastic Materials and Resins Manufacturing
Plating and Polishing
Pressed and Blown Glass & Glassware Manufacturing
Secondary Copper Smelting
Secondary Nonferrous Metals
Stainless and Nonstainless Steel Manufacturing Electric Arc Furnaces (EAF)
Stationary Internal Combustion Engines
Synthetic Rubber Manufacturing
Wood Preserving

This list is not intended to be exhaustive, but rather provides a guide for readers regarding entities likely to be regulated by this action. To determine whether your facility is regulated by this action, you should examine your source category-specific section 112 regulation. Additional information on the listing of source categories is available at *http://www.epa.gov/ttn/atw/socatlst/socatpg.html.* If you have any questions regarding the applicability of this action to a particular entity, consult the person listed in the preceding **FOR FURTHER INFORMATION CONTACT** section.

Docket. EPA has established an official public docket for this action under Docket ID No. OAR–2002–0044. The official public docket is the collection of materials that is available for public viewing in the General Provisions Docket at the EPA Docket Center (Air Docket), EPA West, Room B–108, 1301 Constitution Avenue, NW., Washington, DC 20004. The Docket Center is open from 8:30 a.m. to 4:30 p.m., Monday through Friday, excluding legal holidays. The telephone number for the reading room is (202) 566–1744 and the telephone number for the Air Docket is (202) 566–1742.

Electronic Access. An electronic version of the public docket is available through EPA's electronic public docket and comment system, EPA Dockets. You may use EPA Dockets at *http://www.epa.gov/edocket/* to submit or view public comments, access the index of the contents of the official public docket, and to access those documents in the public docket that are available electronically. Once in the system, select ''search'' and key in the appropriate docket identification number.

Certain types of information will not be placed in the EPA Dockets. Information claimed as confidential business information (CBI) and other information whose disclosure is restricted by statute, which is not included in the official public docket, will not be available for public viewing in EPA's electronic public docket. The EPA's policy is that copyrighted material will not be placed in EPA's electronic public docket but will be available only in printed, paper form in the official public docket. Although not all docket materials may be available electronically, you may still access any of the publicly available docket materials through the docket facility previously identified in this document.

For public commenters, it is important to note that EPA's policy is that public comments, whether submitted electronically or in paper, will be made available for public viewing in EPA's electronic public docket as EPA receives them and without change, unless the comment contains copyrighted material, CBI, or other information whose disclosure is restricted by statute. When EPA identifies a comment containing copyrighted material, EPA will provide a reference to that material in the version of the comment that is placed in EPA's electronic public docket. The entire printed comment, including the copyrighted material, will be available in the public docket.

Public comments submitted on computer disks that are mailed or delivered to the docket will be transferred to EPA's electronic public docket. Public comments that are mailed or delivered to the docket will be scanned and placed in EPA's electronic public docket. Where practical, physical objects will be photographed, and the photograph will be placed in EPA's electronic public docket along with a brief description written by the docket staff.

Comments. You may submit comments electronically, by mail, by facsimile, or through hand delivery/courier. To ensure proper receipt by EPA, identify the appropriate docket identification number in the subject line on the first page of your comment. Please ensure that your comments are submitted within the specified comment period. Comments submitted after the close of the comment period will be marked ''late.'' EPA is not required to consider these late comments.

Electronically. If you submit an electronic comment as prescribed below, EPA recommends that you include your name, mailing address, and an e-mail address or other contact information in the body of your comment. Also include this contact information on the outside of any disk or CD ROM you submit and in any cover letter accompanying the disk or CD ROM. This ensures that you can be identified as the submitter of the comment and allows EPA to contact you in case EPA cannot read your comment due to technical difficulties or needs further information on the substance of your comment. EPA's policy is that EPA will not edit your comment, and any identifying or contact information provided in the body of a comment will be included as part of the comment that is placed in the official public docket and made available in EPA's electronic public docket. If EPA cannot read your comment due to technical difficulties and cannot contact you for clarification, EPA may not be able to consider your comment.

Your use of EPA's electronic public docket to submit comments to EPA electronically is EPA's preferred method for receiving comments. Go directly to EPA Dockets at *http://www.epa.gov/edocket,* and follow the online instructions for submitting comments. Once in the system, select ''search'' and key in Docket ID No. OAR–2002–0044, Category VI, Part 63 General Provisions (Subpart A) Pollution Prevention Compliance Alternative Amendments. The system is an ''anonymous access'' system, which means EPA will not know your identity, e-mail address, or other contact information unless you provide it in the body of your comment.

Comments may be sent by electronic mail (e-mail) to *air-and-r-docket@epa.gov,* Attention Docket ID No. OAR–2002–0044, Category VI, Part 63 General Provisions (Subpart A) Pollution Prevention Compliance Alternative Amendments. In contrast to EPA's electronic public docket, EPA's e-mail system is not an ''anonymous access'' system. If you send an e-mail comment directly to the docket without going through EPA's electronic public docket, EPA's e-mail system automatically captures your e-mail address. E-mail addresses that are automatically captured by EPA's e-mail system are included as part of the comment that is placed in the official

public docket and made available in EPA's electronic public docket.

You may submit comments on a disk or CD ROM that you mail to the mailing address identified in this document. These electronic submissions will be accepted in WordPerfect or ASCII file format. Avoid the use of special characters and any form of encryption.

By Mail. Send your comments (in duplicate, if possible) to: General Provisions Docket, Category VI, Part 63 General Provisions (Subpart A) Pollution Prevention Compliance Alternative Amendments, EPA Docket Center (Air Docket), U.S. EPA West (MD–6102T), Room B–108, 1200 Pennsylvania Avenue, NW., Washington, DC 20460, Attention Docket ID No. OAR–2002–0044.

By Hand Delivery or Courier. Deliver your comments (in duplicate, if possible) to: EPA Docket Center, Room B–108, U.S. EPA West, 1301 Constitution Avenue, NW., Washington, DC 20004, Attention Docket ID No. OAR–2002–0044, Category VI, Part 63 General Provisions (Subpart A) Pollution Prevention Compliance Alternative Amendments. Such deliveries are only accepted during the Docket Center's normal hours of operation as identified in this document.

By Facsimile. Fax your comments to: (202) 566–1741, Attention General Provisions Docket, Category VI, Part 63 General Provisions (Subpart A) Pollution Prevention Compliance Alternative Amendments, Docket ID No. OAR–2002–0044.

CBI. Do not submit information that you consider to be CBI through EPA's electronic public docket or by e-mail. Send or deliver information identified as CBI only to the following address: Roberto Morales, OAQPS Document Control Officer (MD–C404–02), Attention Steve Fruh, U.S. EPA, Research Triangle Park, NC 27709, Attention Docket ID No. OAR–2002–0044. You may claim information that you submit to EPA as CBI by marking any part or all of that information as CBI (if you submit CBI on disk or CD ROM, mark the outside of the disk or CD ROM as CBI and then identify electronically within the disk or CD ROM the specific information that is CBI). Information so marked will not be disclosed except in accordance with procedures set forth in 40 CFR part 2.

Worldwide Web (WWW). In addition to being available in the docket, an electronic copy of this proposal will also be available on the WWW through the Technology Transfer Network (TTN). Following signature, a copy of this action will be posted on the TTN's policy and guidance page for newly proposed rules at *http://www.epa.gov/ttn/oarpg.* The TTN provides information and technology exchange in various areas of air pollution control. If more information regarding the TTN is needed, call the TTN HELP line at (919) 541–5384.

Concurrent Rulemaking: In a proposed rule dated August 13, 2002 (67 FR 52674), EPA solicited comments on the incentives designed for Performance Track member facilities. These proposed amendments contain additional incentives for Performance Track member facilities. Persons interested in doing so are encouraged to comment on the additional incentives as they specifically relate to the MACT incentives in the Performance Track proposed rule. It is EPA's intent to finalize both proposed rules as they relate to the NESHAP General Provisions in one final rulemaking. In the final rule, EPA intends to reconcile the two different definitions of ''pollution prevention'' and ''source at a Performance Track member facility'' as they appear in these proposed amendments and in the Performance Track proposed rule by adopting the definitions contained in these proposed amendments.

Outline. The information presented in this preamble is organized as follows:

I. Summary of Proposed Action
II. Background
III. Proposed Amendments to the Part 63 General Provisions
A. Definitions
B. Option 1: Facilities that Implement Pollution Prevention to Eliminate HAP Emissions Subject to Regulation under a NESHAP Subpart
C. Option 2: Facilities that Implement Pollution Prevention to Reduce HAP Emissions to at Least the Level of a NESHAP Subpart
IV. Statutory and Executive Order Reviews
A. Executive Order 12866, Regulatory Planning and Review
B. Paperwork Reduction Act
C. Regulatory Flexibility Act (RFA), as Amended by the Small Business Regulatory Enforcement Fairness Act of 1996 (SBREFA), 5 U.S.C. 601 *et seq.*
D. Unfunded Mandates Reform Act of 1995
E. Executive Order 13132, Federalism
F. Executive Order 13175, Consultation and Coordination with Indian Tribal Governments
G. Executive Order 13045, Protection of Children from Environmental Health Risks and Safety Risks
H. Executive Order 13211, Actions Concerning Regulations that Significantly Affect Energy Supply, Distribution, or Use
I. National Technology Transfer Advancement Act

I. Summary of Proposed Action

We are proposing to amend the NESHAP General Provisions in 40 CFR part 63, subpart A. The individual NESHAP (which are frequently referred to as MACT standards) are codified as subparts within 40 CFR part 63. We are proposing two options:

- *Option 1:* If a facility completely eliminates all HAP emissions from all sources of emissions regulated by the subpart, it could request to no longer be subject to that subpart. This option would be available only where the subpart does not already require complete elimination of HAP emissions from any of the regulated sources of emissions.
- *Option 2:* If a facility uses P2 to reduce HAP emissions either to the level required by the subpart, or below, it could request ''P2 alternative compliance requirements.'' The alternative compliance requirements would include monitoring, recordkeeping, reporting, and/or other requirements which match the P2 measures implemented by the facility. Alternative emission limits could not be included. If approved, the alternative compliance requirements would replace specified requirements in the subpart. This option would be available for any regulated portion of the facility; it would not be necessary for the facility to implement P2 on every source of emissions that is subject to the subpart. Under this option, the facility would remain subject to the subpart, but some of the requirements would be changed.

Either option would be effective only as long as the facility continued to use the P2 measures and to eliminate or reduce HAP emissions as described in the approved request. If the facility discontinued the P2 measures or failed to eliminate or reduce HAP emissions as approved, all applicable requirements of the subpart would again apply immediately, and the facility would be required to comply beginning on that date.

We are also proposing additional incentives for sources at facilities that are members of the Performance Track program.

II. Background

Consistent with the Pollution Prevention Act of 1990 (42 U.S.C. 13101–13109), it is our policy to promote and encourage P2 in all our programs. We seek to reduce HAP emissions with alternative approaches that achieve results in innovative and sustainable ways. Preventing pollution at the source is our strategy of first choice. Pollution prevention strategies

allow facilities the advantage of meeting pollution reduction goals in ways that are most cost effective and appropriate for their individual situations. Furthermore, State and local air pollution agencies have urged us on numerous occasions to do more to encourage P2 in the MACT standards program. For these reasons, we are proposing revisions to the part 63 General Provisions which encourage the development and implementation of P2 measures at facilities that are already subject to NESHAP subparts. By working with State and local agencies in a series of meetings, we have developed this proposal to further this goal.

We are also proposing provisions that would further promote improved environmental performance through incentives that are only available to facilities participating in the Performance Track program. For example, the Administrator will designate a central contact within the EPA to facilitate and expedite the review of a Performance Track member facility's request for pollution prevention alternatives. The Performance Track program was created to recognize, provide incentives, and reward individual facilities that go beyond compliance in their environmental operations and management. The Performance Track program is based on the following premises: Better environmental performance warrants different oversight; the EPA should induce facilities to perform beyond basic compliance; environmental accomplishments should be recognized and rewarded; private and public resources should be used efficiently to these ends; and demonstrated innovative ideas should be included in regulations.

The Agency selects its Performance Track members for entry into the program based on certain criteria. Member facilities must:

- Have adopted and implemented an environmental management system that includes specific elements;
- Be able to demonstrate environmental achievements and commit to continued improvement in particular environmental categories;
- Engage the public, and report to the public on the facilities' performance; and
- Have a record of sustained compliance with environmental requirements.

In addition, member facilities must commit to providing annual reports on the status of their efforts to achieve their commitments to making improvements in specific environmental categories and to maintaining their qualifications as program participants.

In line with these premises and criteria, we are proposing provisions that would provide additional incentives only to those sources at facilities that are members of the Performance Track program.

III. Proposed Amendments to the Part 63 General Provisions

We are proposing to amend the General Provisions for the MACT-based NESHAP, which are codified at 40 CFR part 63, subpart A. The General Provisions establish the framework for emission standards and other requirements developed pursuant to section 112 of the CAA. The General Provisions eliminate the repetition of general information and requirements in individual NESHAP subparts by consolidating all generally applicable information in one location. They include sections on applicability, definitions, compliance dates and requirements, monitoring, and recordkeeping and reporting, among others. In addition, they include administrative sections concerning actions that the EPA Administrator must take, such as making determinations of applicability, reviewing applications for approval of new construction, responding to requests for extensions or waivers of applicable requirements, and generally enforcing NESHAP. The General Provisions apply to every facility that is subject to a NESHAP subpart, except where specifically overridden by that subpart.

We are proposing to add definitions for ''pollution prevention'' and ''source at a Performance Track member facility'' to § 63.2 of the General Provisions.

The proposed amendments would also add two sections to the General Provisions. New § 63.17 (Option 1) would provide a mechanism for a facility that uses P2 to eliminate completely all HAP emissions regulated under a NESHAP subpart to become exempt from that subpart. New § 63.18 (Option 2) would provide a mechanism enabling a facility that uses P2 to reduce HAP emissions to at least the level required by a NESHAP subpart to replace select requirements of the subpart with requirements appropriate to the P2 measures.

A. Definitions

We are proposing to add the following definitions for ''pollution prevention'' and ''source at a Performance Track member facility'' to § 63.2 of the General Provisions:

Pollution prevention means *source reduction* as defined under the Pollution Prevention Act. The definition is as follows:

(1) *Source reduction* is any practice that:

(i) Reduces the amount of any hazardous substance, pollutant, or contaminant entering any waste stream or otherwise released into the environment (including fugitive emissions) prior to recycling, treatment, or disposal; and

(ii) Reduces the hazards to public health and the environment associated with the release of such substances, pollutants, or contaminants.

(2) The term *source reduction* includes equipment or technology modifications, process or procedure modifications, reformulation or redesign of products, substitution of raw materials, and improvements in housekeeping, maintenance, training, or inventory control.

(3) The term *source reduction* does not include any practice that alters the physical, chemical, or biological characteristics or the volume of a hazardous substance, pollutant, or contaminant through a process or activity which itself is not integral to and necessary for the production of a product or the providing of a service.

This definition is taken directly from the Pollution Prevention Act of 1990 (42 U.S.C. 13101–13109). We are proposing to add this definition to clarify the types of actions that we intend to consider in qualifying a facility for Option 1 or 2.

The Pollution Prevention Act establishes the following hierarchy for managing pollution and wastes: source reduction, recycling, treatment, and disposal. Because Congress' primary focus in this statute was source reduction, we are proposing to limit availability of Options 1 and 2 to facilities whose P2 measures qualify as source reduction.

Source at a Performance Track member facility means a major or area source located at a facility which has been accepted by EPA for membership in the Performance Track program (as described at *http://www.epa.gov/performancetrack,* formerly known as the Achievement Track Program) and is still a member of the program. The Performance Track program is a voluntary public-private partnership that encourages continuous environmental improvement through the use of environmental management systems, local community outreach, and measurable results.

B. Option 1: Facilities That Implement Pollution Prevention To Eliminate HAP Emissions Subject to Regulation Under a NESHAP Subpart

We are proposing to add § 63.17 to the General Provisions to address facilities that were subject to a NESHAP subpart on the first applicable compliance date, and which subsequently have implemented P2 measures that eliminate all HAP emissions that are regulated under that subpart. Under the proposed provision, such facilities could submit a request to the Administrator to no longer be subject to the subpart. If approved, the facility would no longer be subject to the subpart, as long as it does not resume emitting HAP from the regulated source(s) of emissions.

A facility would be eligible for Option 1 if the following three conditions are met for a particular NESHAP subpart:

- The facility was subject to the subpart on the first compliance date that applied to the facility under the subpart.
- The facility has implemented P2 measures which ensure that no HAP is emitted from any source of emissions that is subject to any requirement under the subpart.
- None of the emission limitations under the subpart already require the complete elimination of HAP emissions.

By ''first applicable compliance date'' we mean the first date by which a source must comply with an emission limitation or other substantive regulatory requirement (*i.e.*, emission limit, leak detection and repair program, work practice standard, housekeeping measure, *etc.,* but not a notice requirement) in the applicable NESHAP subpart. For an existing major source, the first applicable compliance date is the compliance date defined in the subpart for such sources, typically 3 years after the effective date (*i.e.*, promulgation date) of the subpart. (This is also true for subparts that apply to area sources.) For subparts that have multiple and staggered compliance dates for different emission limitations, this means the first such date. For a new source, the first applicable compliance date is either the date of startup or the effective date of the subpart, whichever is later.

We have included this condition because this mechanism is intended primarily for facilities that have initially been subject to a NESHAP subpart and complied through conventional means, such as add-on emission control equipment or mandated work practices. In this way, we intend to encourage and reward the development and implementation of P2 measures for such facilities.

As a general matter, we already encourage facilities to develop and implement P2 measures prior to the first applicable compliance date. Facilities that eliminate HAP through P2 (or otherwise) prior to the first compliance date avoid becoming subject to major source NESHAP subparts. The proposed General Provisions section (§ 63.17) would extend the same benefits to facilities that implement P2 measures to eliminate HAP after this initial window of opportunity. This condition would require the facility to use P2 to reduce HAP emissions to zero for all the sources of emissions subject to any requirement under a particular NESHAP subpart. For purposes of this proposal, ''pollution prevention'' means ''source reduction'' as defined in the Pollution Prevention Act. As discussed earlier in this preamble, we are proposing to add this definition to § 63.2 of the General Provisions.

By ''sources of emissions'' we mean all emission units or processes, which includes sources of fugitive emissions as well as sources with identifiable points of emissions (such as stacks). ''Subject to any requirement under the subpart'' refers to sources of emissions to which any type of requirement applies under the subpart. This includes sources of emissions to which emission limitations apply. ''Emission limitations'' include operation and maintenance, design, equipment, work practice, and operational requirements, as well as emission limits, opacity limits, operating limits, and visible emissions limits. Moreover, this includes sources of emissions that are below a cutoff in the subpart so that an emission limitation does not apply, but monitoring or recordkeeping requirements apply.

Option 1 would apply subpart by subpart. That is, a facility could use this mechanism to cease being subject to one NESHAP subpart, even if it continued to emit HAP from equipment that is subject to a different NESHAP subpart.

Option 1 would be ''all or nothing.'' A facility would not be eligible to use this mechanism if it eliminated HAP emissions from only some of the sources of emissions that are regulated under the NESHAP subpart. For example, if a subpart includes multiple affected sources, a facility could not use this provision to become exempt from the subpart for individual affected sources. However, such facilities could likely use the second option to obtain reduced monitoring, recordkeeping, and reporting requirements for those affected sources or individual sources of emissions for which they have eliminated HAP emissions.

Option 1 could be used only when none of the emission limitations in the subpart require the facility to completely eliminate HAP emissions. Any zero HAP limitation could only be achieved through P2. (Add-on controls, work practices, *etc.,* can never achieve zero HAP emissions as long as HAP are used or produced.) Thus, a facility that implements P2 to eliminate HAP emissions from the subject source of emissions is simply meeting the required limitation. We do not believe that such a facility should be exempted from an emission limitation, and the associated monitoring, recordkeeping, and reporting, if the subpart already has a requirement to meet a zero HAP limitation.

Furthermore, we believe that subparts that include a requirement to meet a zero HAP emission limitation contain associated compliance provisions (such as testing, monitoring, recordkeeping, and reporting) that are appropriate for that limitation, and that no further relief is warranted. However, if a facility implements P2 measures that were unanticipated during development of the subpart, rendering the subpart's compliance provisions inappropriate, the facility could use the second option to obtain appropriate provisions.

It should be noted that requirements for zero visible emissions or zero opacity do not qualify as ''zero HAP emission limitations.'' Such limits can be met without completely eliminating HAP from a process. Thus, such limits do not preclude a source from using this option.

Under Option 1, a facility could submit a written request to the Administrator to no longer be subject to the subpart at any time after the subpart's first applicable compliance date. As defined in § 63.2 of the General Provisions, ''Administrator'' means the EPA Administrator or his or her authorized representative, such as a State that has been delegated the authority to implement the provisions of part 63. For Performance Track member facilities, the Administrator would designate a central contact within the EPA to facilitate and expedite the review of such requests for a P2 exemption. Owners and operators of Performance Track member facilities would be encouraged to submit their requests to the designated Performance Track contact within EPA in addition to the EPA Administrator.

The request may include any information that the facility considers useful in demonstrating that the subpart should no longer apply. At a minimum,

the written request would be required to include these six items:

- A statement identifying the NESHAP subpart and the operations that are currently subject to the subpart, and indicating that the facility is applying to no longer be subject to the subpart.
- A description of the P2 measures used to eliminate HAP emissions and a demonstration that the measures qualify as P2 as defined in § 63.2.
- A demonstration that the P2 measures have eliminated all HAP emissions from each and every source of emissions subject to an emission limitation under the subpart.
- Documentation that the subpart does not include a limit of zero HAP emissions for any of the sources of emissions subject to an emission limitation under the subpart.
- A certification (signed by a responsible official) that the facility will not resume emitting HAP without notifying the Administrator in writing at least 30 days prior to doing so.
- A certification (signed by a responsible official) agreeing that, upon resuming HAP emissions, the relevant subpart again applies, and the facility must immediately comply with the requirements of the subpart.

The first four items that would be required simply identify the NESHAP subpart and the affected equipment, indicate that the facility wishes to use this provision to be exempt from the subpart, and demonstrate that the facility meets the eligibility requirements. The fifth is an enforceable commitment by the facility not to resume emitting HAP from the affected operations without giving at least 30 days written notice. The sixth is an enforceable acknowledgment by the facility that if it resumes emitting HAP from the affected operations, the relevant subpart applies immediately and the facility would be required to comply with the subpart immediately upon beginning to emit HAP.

A facility that submits a request under Option 1 would remain subject to the NESHAP subpart in question until the Administrator notifies it in writing that the request to no longer be subject to the subpart has been approved. When the Administrator receives a request under Option 1, he or she would notify the facility in writing of approval or intent to deny approval within 45 days after receiving the original request. (Performance Track member facilities would be notified within 30 days.) However, failure by the Administrator to meet this deadline would not constitute approval of the request.

If the Administrator intends to disapprove the request, he or she would include the following three items in the written notification:

- Notice of the information and findings on which the intended disapproval is based.
- Notice of the opportunity for the facility to present additional information before final action on the request.
- A deadline for the facility to present the additional information.

If the facility fails to provide additional information by the deadline established above, the Administrator would disapprove the request. If the facility provided additional information by the deadline, the Administrator would notify the facility of approval or disapproval within 45 days after receiving the information. (Performance Track member facilities would be notified within 30 days.) However, failure by the Administrator to meet this deadline would not constitute approval of the request.

If the Administrator finds that the facility meets the requirements under Option 1, he or she would approve the facility's request to no longer be subject to the subpart. However, the Administrator could condition approval on additional compliance measures as deemed necessary. The Administrator would transmit written approval to the facility that includes the following components:

- Identification of the subpart that no longer applies.
- Identification of the sources of emissions to which the subpart would otherwise apply.
- Any additional compliance measures deemed necessary.
- A requirement that the facility provide written notice to the Administrator at least 30 days prior to beginning to emit HAP from the designated sources of emissions.
- A condition that the applicable requirements of the subpart will again apply to the designated sources of emissions on the date that the facility begins to emit HAP from the sources of emissions, and that the facility must comply with the requirements of the subpart on that date. This written approval would serve as an enforceable agreement between the enforcing agency and the facility.

We believe that 45 days is a reasonable period for the Administrator to review a request and determine whether it should be approved or denied. We also believe that a reduced period of 30 days is a reasonable period of time for the Administrator to review a request from a Performance Track member facility and determine whether it should be approved or denied, particularly with the support of a designated central contact within EPA to facilitate and expedite the Performance Track request. Performance Track member facilities would be accorded a shorter review period in recognition of their top environmental performance, because of EPA's increased familiarity with operations at these member facilities, and to provide an incentive to promote increased participation in the Performance Track program. However, we have proposed that a failure to meet this deadline should not be deemed approval because we believe that an action of this importance should not go into effect without affirmative approval.

After a facility's request has been approved, the facility would be required to keep the commitments it agreed to during the request/approval process. These include the commitment not to emit HAP from the affected sources of emissions without giving at least 30 days prior notice and the requirement to carry out any additional compliance measures upon which the approval was conditioned.

In addition, we believe that the facility should keep records sufficient to show that it is meeting its commitments. Nevertheless, we have not proposed that the facility must accept specified monitoring, recordkeeping, and reporting requirements for this purpose. We believe that the situation after an approval is analogous to that of any other facility in a source category for which a NESHAP subpart is promulgated. These facilities would be required to determine whether they are subject to the subpart, and, if not, they would be required to produce documentation to satisfy the Administrator that they are not subject when asked to do so. If a facility incorrectly asserted that it was not subject to the subpart, it would be subject to an enforcement action for failing to meet the requirements of the subpart.

This being said, we also acknowledge that all facilities are unique. We are proposing that the Administrator may condition approval on additional compliance measures, and these may include monitoring, recordkeeping, and/or reporting as warranted by individual circumstances. However, we do not think the level required for demonstrating continuous compliance under a NESHAP subpart is likely to be appropriate here.

If a facility resumes HAP emissions from the affected operations, the NESHAP subpart would apply to the

facility immediately, and the facility would be required to comply with the subpart immediately upon emitting HAP. This would be a condition of approval, and the facility must agree to it during the request/approval process. If the facility fails to give 30 days notice of its intent to emit HAP from the affected operations and/or fails to comply with the subpart upon emitting HAP, it could be subject to an enforcement action.

If the facility has no reason to be subject to CAA title V permitting requirements after approval of a request under Option 1, it could apply to its permitting authority to rescind the permit. This would be the case if the only reason that a facility was required to have a title V permit was the fact that it was subject to the NESHAP subpart that no longer applies after the approval.

If the facility continued to be subject to title V for other reasons, such as major status for HAP or other pollutants, the ''applicable requirements'' that come out of the request/approval process would be added to the title V permit. These would include the requirement not to emit HAP from the affected operations without 30 days notice; the stipulation that the NESHAP subpart applies, and that the facility must comply immediately upon emitting HAP; and any additional compliance measures imposed as a condition of approval. Similarly, the requirements of the subpart itself would be removed from the title V permit.

From the perspective of part 63, the facility would no longer be subject to the subpart upon receiving written approval of its request from the Administrator. We believe that the facility should generally be able to implement the approved change in status immediately, with any process needed to revise the title V permit taking place afterwards.

C. Option 2: Facilities That Implement Pollution Prevention To Reduce HAP Emissions To at Least the Level of a NESHAP Subpart

We are proposing to add § 63.18 to the General Provisions to address facilities that are subject to a NESHAP subpart on the first applicable compliance date, and have subsequently implemented P2 measures to achieve and maintain HAP emissions reductions equivalent to or better than the MACT level of control for some or all of the regulated sources of emissions. Under the proposed Option 2, such facilities could submit a request to the Administrator for P2 alternative compliance requirements.

If the request is approved, the alternative compliance requirements would replace requirements specified in the subpart. The P2 alternative compliance requirements would remain in force as long as the facility continues to use the P2 measures and maintains the HAP emissions reductions described in the approved request.

A facility would be eligible for Option 2 if the following two conditions are met for a particular NESHAP subpart:

- The facility was subject to the subpart on the first compliance date that applied to the facility under the subpart.
- The facility has implemented P2 measures to reduce HAP emissions to at least the level required under the subpart for one or more of the regulated sources of emissions, and continues to maintain those reductions.

The first condition is the same as presented above in Option 1 for facilities that eliminate regulated HAP emissions entirely. The second condition would require the facility to use P2 to reduce HAP emissions, to at least the level of the subpart requirements, for at least one source of emissions that is subject to an emission limitation under the subpart. Option 2 differs from Option 1 in that this condition would not require the facility either to completely eliminate HAP emissions or to apply P2 across all the sources of emissions regulated under the subpart. Instead, the facility could apply for P2 alternative compliance requirements for any regulated sources of emissions on which it has implemented P2 and achieved or exceeded the HAP emissions reductions required under the subpart.

A facility could submit a written request to the Administrator for P2 alternative compliance requirements at any time after the subpart's first applicable compliance date. As defined in § 63.2 of the General Provisions, ''Administrator'' means the EPA Administrator or his or her authorized representative, such as a State that has been delegated the authority to implement the provisions of part 63. For Performance Track member facilities, the Administrator would designate a central contact within the EPA to facilitate and expedite the review of such requests for P2 alternative requirements. Owners and operators of Performance Track member facilities would be encouraged to submit their requests to the designated Performance Track contact within EPA in addition to the EPA Administrator.

The request may include any information that the facility considers useful to demonstrate that alternative compliance requirements are justified. At a minimum, the proposed rule would require that the written request include these nine items:

- A statement identifying the NESHAP subpart and the operations that are subject to the subpart, and indicating that the facility is applying for P2 alternative compliance requirements.
- A description of each source of emissions for which the facility is requesting P2 alternative compliance requirements.
- A description of the P2 measures used to reduce HAP emissions, and a demonstration that the measures qualify as P2 as defined in § 63.2. (This definition is proposed to be added as part of this rulemaking; *see* section III.A of this document.)
- A demonstration that the P2 measures have reduced HAP emissions from each source of emissions for which alternative compliance requirements are being requested to at least the level that is required by the subpart.
- Proposed specific P2 alternative compliance requirements for the designated sources of emissions which ensure that the commitment both to continue using the P2 measures and to maintain the described HAP emissions reductions is enforceable as a practical matter, along with a demonstration that the proposed alternative requirements will effectively assure continuous compliance with the commitment.
- A citation of each applicable requirement in the subpart and General Provisions that the facility proposes to replace with the P2 alternative compliance requirements, accompanied by an explanation of how the proposed alternative requirements satisfy the intent of the replaced requirements and/or why the replaced requirements are not necessary.
- A certification (signed by a responsible official) that the facility will not discontinue the P2 measures or fail to maintain the HAP emissions reductions described in the request without notifying the Administrator in writing at least 30 days prior to doing so.
- A certification (signed by a responsible official) agreeing that, upon discontinuing the P2 measures and/or failing to maintain the HAP emissions reductions described in the request, the subpart again applies and the facility must comply immediately with all of the requirements of the subpart.
- A certification (signed by a responsible official) that the facility is subject to all applicable requirements of the subpart not proposed to be replaced by P2 alternative compliance requirements.

The first four required items would simply identify the NESHAP subpart and the affected equipment, indicate that the facility wishes to use this provision to obtain P2 alternative compliance requirements, and demonstrate that the facility meets the eligibility requirements. For the fifth and sixth items, the facility would propose and justify the alternative compliance requirements and identify the requirements in the subpart that the alternative requirements would replace. The seventh and eighth items certify that the facility acknowledges it would be required to continue the approved alternative P2 measures, and understands the consequences for failing to do so. The ninth item certifies that the facility will continue to comply with those portions of the subpart that were not replaced by approved alternative P2 measures.

Under Option 2, approved P2 alternative compliance requirements would actually replace the compliance requirements in the NESHAP subpart and become the facility's applicable requirements under part 63 for the subpart. However, unlike Option 1, the facility would remain subject to the subpart. Thus, the facility would be required to continue to meet all requirements of the subpart for any regulated sources of emissions not included in the request, and it would remain subject to title V permitting requirements.

To provide certainty to both the facility and the enforcement agency as to exactly what requirements apply to each regulated source of emissions, the proposed rule would require that the facility's request clearly tie the proposed P2 alternative compliance requirements to the designated sources of emissions. Where appropriate, the facility could propose different alternative requirements for different sources of emissions, as long as applicability is clear. In addition, the facility would be required to specify exactly which requirements of the subpart and General Provisions would be replaced by the proposed P2 alternative compliance requirements, and for which sources of emissions.

For its P2 alternative compliance requirements, the facility would be required to propose measures that assure compliance with its commitments both to continue using the P2 measures and to maintain the HAP emissions reductions described in the request. Because the facility would remain subject to the subpart, the alternative requirements would be sufficient to demonstrate continuous compliance.

To demonstrate and assure continuous compliance, we expect that the P2 alternative compliance requirements will include monitoring, recordkeeping, and reporting requirements. In this context, we mean ''monitoring'' in a broad sense, which could involve simply tracking the purchases and composition of the materials used in the operations covered by the alternative requirements. Depending on the situation, appropriate monitoring may involve more rigorous measures, up to and including continuous instrumental monitoring of process or control device operating parameters or of the exhaust stream. In general, the monitoring program should gather relevant data with sufficient frequency and accuracy to form a conclusive basis for assessing whether the facility maintained continuous compliance with its commitments for P2 and HAP emissions reductions. The monitoring program should include appropriate quality assurance and quality control procedures to ensure the continued reliability of monitoring data.

Similarly, the facility would be required to propose recordkeeping requirements sufficient to document conclusively whether the facility maintained continuous compliance. One existing recordkeeping requirement in the General Provisions that we believe generally should not be replaced by alternative requirements is § 63.10(b)(1), which governs availability and retention of records. The facility's proposed reporting requirements would include periodic reporting to disclose periods of noncompliance or to confirm continuous compliance, as applicable, for each reporting period. Reports also should address the performance of the facility's monitoring program. We expect that alternative reporting requirements typically will conform to the schedule of the existing requirements for the sources of emissions not covered by the P2 alternative compliance requirements, and that the facility would submit combined reports for all of the sources of emissions subject to the subpart.

The facility should not overlook startup, shutdown, and malfunction (SSM) requirements in its request for P2 alternative compliance requirements. It may need to revise its SSM plan, and may want to propose alternative SSM recordkeeping or reporting requirements to match its P2 measures.

The mechanics of the review process under Option 2 would be identical to the process under Option 1. A facility that submits a request under Option 2 would remain subject to all the applicable requirements of the NESHAP subpart in question until the Administrator notifies it in writing that the request for P2 alternative compliance requirements has been approved. When the Administrator receives a request under Option 2, he or she would notify the facility in writing of approval or intent to deny approval within 45 days after receiving the original request. (Performance Track member facilities would be notified within 30 days.) However, failure by the Administrator to meet this deadline would not constitute approval of the request.

If the Administrator intends to disapprove the request, he or she would include the following three items in the written notification:

- Notice of the information and findings on which the intended disapproval is based.
- Notice of the opportunity for the facility to present additional information before final action on the request.
- A deadline for the facility to present the additional information.

If the facility failed to provide additional information by the deadline established above, the Administrator would deny the request. If the facility provided additional information by the deadline, the Administrator would notify the facility of approval or disapproval within 45 days after receiving the information. (Performance Track member facilities would be notified within 30 days.) However, failure by the Administrator to meet this deadline would not constitute approval of the request.

If the Administrator found that the facility meets the requirements under Option 2, he or she would approve the facility's request for P2 alternative compliance requirements. However, the Administrator could condition approval on additional compliance measures as deemed necessary. The Administrator would transmit written approval to the facility that would include the following components:

- Identification of the specific regulated sources of emissions covered by the approval.
- The P2 alternative compliance requirements that apply, including any additional compliance measures deemed necessary. (If necessary, the alternative requirements that apply to different sources of emissions would be clearly specified.)
- The applicable requirements of the subpart that no longer apply to the designated sources of emissions. (Again, requirements would be differentiated by source of emissions, if necessary.)

• A requirement that the facility provide written notice to the Administrator at least 30 days prior to discontinuing the P2 measures and/or failing to maintain the HAP reductions described in the request.

• A condition that the applicable requirements of the subpart will again apply to the designated source(s) of emissions on the date that the facility discontinues the P2 measures and/or fails to maintain the HAP reductions described in the request, and that the facility must comply on that date. This written approval would serve as an enforceable agreement between the enforcing agency and the facility.

As noted previously, we believe that 45 days is a reasonable period for the Administrator to review a request and determine whether it should be approved or denied. We also believe that a reduced period of 30 days is a reasonable period of time for the Administrator to review a request from a Performance Track member facility and determine whether it should be approved or denied, particularly with the support of a designated central contact within EPA to facilitate and expedite the Performance Track request. Performance Track member facilities would be accorded a shorter review period in recognition of their top environmental performance, because of EPA's increased familiarity with operations at these member facilities, and to provide an incentive to promote increased participation in the Performance Track program. However, we are proposing that a failure to meet this deadline should not be deemed approval because an action of this importance should not go into effect without affirmative approval.

In implementing Option 2, the Administrator will remain cognizant of the fact that the purpose of these provisions is to provide an incentive for facilities to develop and implement P2 measures. At the same time, the reviewing agency must ensure that HAP emissions will be reduced to at least the level of MACT, and that the P2 alternative compliance requirements will assure compliance with the facility's commitments in a practically enforceable way. Option 2 is not intended to be a mechanism for obtaining an exemption from necessary compliance requirements.

As a first step, a facility would submit a clear and complete request for P2 alternative compliance requirements. At a minimum, the request would include the nine components previously listed. The facility would be free to submit any additional information that it believes will help justify the alternative requirements.

The facility and the reviewing agency must have a common understanding of the sources of emissions designated for P2 alternative compliance requirements, the proposed alternative requirements (*i.e.*, the actions that the facility would be required to carry out), and the provisions of the NESHAP subpart and General Provisions that would no longer apply. In addition, three unambiguous certifications, signed by a responsible official of the facility (as defined in § 63.2 of the General Provisions) would be included in the request. The reviewing agency would not grant a request until these aspects are clearly and completely specified in writing.

A key component of the request would be a clear and comprehensive description of the P2 measures that the facility has implemented and a demonstration that these measures meet the definition of ''pollution prevention'' in the proposed amendments. As detailed earlier (in Section III A.), ''pollution prevention'' means ''source reduction'' as defined in the Pollution Prevention Act.

Another key component of the request would be a demonstration that the P2 measures have achieved, and will maintain, HAP emissions reductions equivalent to or better than the MACT level of control. Because of the uniqueness of each situation, the facility should describe operations before and after implementation of the P2 measures so as to demonstrate that the P2 measures obtain equivalent (or better) results. Facilities have detailed knowledge of their operations and, as such, are in the best position to determine how to make this demonstration.

We will encourage State, local, and tribal agencies that receive requests for P2 alternative compliance requirements to collaborate with the EPA Regional Offices and Headquarters in reviewing these requests. In this manner, we expect to build a common awareness of the issues that arise as a basis for forging a common approach to review and approval.

We invite comment on this approach to demonstrating that P2 measures reduce HAP emissions to at least the level required by the NESHAP subpart. Commenters who believe that we should provide more specific criteria or guidance on this demonstration should provide specific suggestions on appropriate criteria/guidance.

In addition to proposing clear P2 alternative compliance requirements, the proposed rule would require that the request include a commitment from the facility to continue using the P2 measures and to maintain the described HAP emissions reductions. To be approved, the alternative requirements must be adequate to demonstrate and document continuous compliance.

For example, if a process has been modified to make it inherently less polluting and incapable of emitting HAP at or near the level of the MACT emission limit, the alternative compliance requirements might consist of documenting and periodically certifying that the process continues to be operated as described in the request. If the P2 measures consist of switching raw materials to reduce HAP emissions, tracking raw material purchases and HAP content may be adequate to demonstrate continuous compliance.

The margin of compliance achieved through the P2 measures can be an important consideration in developing proposed alternative requirements. When HAP emissions are at or near the emission limit, greater accuracy would typically be desired than when emissions are well below allowable levels and the likelihood of exceeding the limit is low. Many existing regulations and policies are based on this principle. For example, the General Provisions already provide a mechanism whereby a facility with a continuous emission monitoring system may apply for a less-rigorous alternative to the relative accuracy test when its emission rate is less than 50 percent of the applicable emission limit. (*See* § 63.8(f)(6).)

Many subparts include emission limits and/or compliance options based on P2. For such subparts, we do not believe that simply meeting these limits automatically entitles a facility to P2 alternative compliance requirements, since the requirements are based on the use of P2. In general, we believe that the existing requirements are appropriate in such cases; however, there may be situations where an alternative requirement is equally appropriate. For example, the reviewing agency may wish to consider approving alternative compliance requirements where a facility's P2 measures have reduced HAP emissions to well below the emission limit (*i.e.*, where the margin of compliance is large). The margin of compliance is relevant because we have typically developed compliance requirements based on what is needed to assure continuous compliance when a facility operates at or near the emission limit. In addition, a facility that has introduced P2 measures that were not considered during development of the applicable subpart's compliance requirements is a prime

candidate for P2 alternative compliance requirements.

After a facility's request has been approved under Option 2, the facility would keep the commitments it agreed to during the request/approval process. This includes the commitment to neither discontinue the P2 measures, nor fail to maintain the HAP emissions reductions described in the request without giving at least 30 days prior notice. It also includes the commitment to comply with the NESHAP subpart for all sources of emissions not designated in the request and approval, and the commitment to carry out the approved P2 alternative compliance requirements (including any added by the Administrator as a condition of approval).

After approval, the P2 alternative compliance requirements would replace the identified portions of the NESHAP subpart and General Provisions for the designated sources of emissions. They would become the enforceable requirements for the facility under 40 CFR part 63 for the subpart.

Note that the facility would be required to maintain the HAP emissions reductions described in its request and approved by the Administrator, even if this requirement is more stringent than the subpart's emission limit. This would be a condition of approval, and the facility would be required to agree to it during the request/approval process. Because the facility's margin of compliance with the MACT emission limits may have been an important consideration in development and approval of its P2 alternative compliance requirements, it is important that the compliance margin be maintained. Alternative compliance requirements approved based on a large margin of compliance may not be adequate to demonstrate continuous compliance during times when the facility operates closer to the emission limit in the subpart. Thus, facilities should be aware that they will be held to the HAP reductions described in their requests. If necessary, they may want to build in some flexibility by claiming less HAP reductions than they are able to obtain with the P2 measures under optimum current operating conditions.

If a facility discontinued the P2 measures and/or failed to maintain the HAP emissions reductions described in the approved request without giving at least 30 days prior notice, it may be subject to an enforcement action for violating the commitments it agreed to as a condition of approval. In addition, all portions of the NESHAP subpart would apply to the facility immediately, and the facility would be required to comply with the subpart immediately upon discontinuing the P2 measures and/or failing to maintain the HAP reductions described in the approved request, whether or not the facility gave the required prior notice. The facility may be subject to an enforcement action if it does not comply with all portions of the NESHAP subpart immediately.

A facility operating under approved P2 alternative compliance requirements could submit a request, at any time, to modify the alternative requirements. The request may involve changes to any combination of the approved P2 measures, levels of HAP reductions, and alternative compliance requirements.

A request for a modification would include, at a minimum, the same information required for an initial request for P2 alternative compliance requirements. The facility may include any additional information that it believes will help demonstrate that modifications are justified.

The Administrator would review the request and approve or disapprove it according to the procedures for an initial request. The facility would remain subject to the existing P2 alternative compliance requirements and all associated commitments until it received written approval of the requested modifications.

A facility that receives approval of P2 alternative compliance requirements would remain subject to the NESHAP subpart. As a result, the facility also would remain subject to title V permitting requirements.

The ''applicable requirements'' that come out of the request/approval process would be added to the title V permit. These would include the following:

- The approved P2 alternative compliance requirements (including any requirements added by the Administrator as a condition of approval), with associated sources of emissions.
- Citations for the subpart and General Provisions requirements that have been replaced by the P2 alternative compliance requirements, with associated sources of emissions.
- A requirement to give at least 30 days notice prior to discontinuing the P2 measures and/or failing to maintain the HAP emissions reductions described in the request.
- A stipulation that all portions of the subpart apply, and the facility must comply immediately upon discontinuing the P2 measures and/or failing to maintain the HAP emissions reductions described in the request.

Similarly, any requirements in the subpart which no longer apply to the facility would be removed from the title V permit. From the perspective of 40 CFR part 63, the facility would be subject to the P2 alternative compliance requirements (and not to the replaced NESHAP subpart and General Provisions requirements) upon receiving written approval of its request from the Administrator. As noted previously, we believe that the facility should generally be able to implement the approved change in status immediately, with the needed title V permit revisions taking place afterwards.

IV. Statutory and Executive Order Reviews

A. Executive Order 12866, Regulatory Planning and Review

Under Executive Order 12866 (58 FR 51735, October 4, 1993), the EPA must determine whether the regulatory action is ''significant'' and therefore subject to review by the Office of Management and Budget (OMB) and the requirements of the Executive Order. The Executive Order defines a ''significant regulatory action'' as one that is likely to result in a rule that may:

(1) Have an annual effect on the economy of $100 million or more or adversely affect in a material way the economy, a sector of the economy, productivity, competition, jobs, the environment, public health or safety, or State, local, or tribal governments or communities;

(2) Create a serious inconsistency or otherwise interfere with an action taken or planned by another agency;

(3) Materially alter the budgetary impact of entitlements, grants, user fees, or loan programs or the rights and obligations of recipients thereof; or

(4) Raise novel legal or policy issues arising out of legal mandates, the President's priorities, or the principles set forth in the Executive Order.

It has been determined that these proposed amendments are not a ''significant regulatory action'' under the terms of Executive Order 12866 and are therefore not subject to OMB review.

B. Paperwork Reduction Act

The information collection requirements in the proposed amendments have been submitted for approval to OMB under the Paperwork Reduction Act, 44 U.S.C. 3501 *et seq.* An information collection request (ICR) document has been prepared by EPA (ICR No. 2099.01), and a copy may be obtained from Susan Auby by mail at U.S. EPA, Office of Environmental Information, Collection Strategies Division (2822T), 1200 Pennsylvania Avenue, Washington, DC 20460, by e-

mail at *auby.susan@epa.gov,* or by calling (202) 566–1672. A copy may also be downloaded off the Internet at *http://www.epa.gov/icr.* The information requirements are not effective until OMB approves them.

The information requirements are based on notification, recordkeeping, and reporting requirements in the NESHAP General Provisions (40 CFR part 63, subpart A), which are mandatory for all operators subject to NESHAP. These recordkeeping and reporting requirements are specifically authorized by section 114 of the CAA (42 U.S.C. 7414). All information submitted to EPA pursuant to the recordkeeping and reporting requirements for which a claim of confidentiality is made is safeguarded according to Agency policies in 40 CFR part 2, subpart B.

The proposed amendments would require that owners or operators who wish to apply for P2 compliance alternatives to submit a written request that provides all information needed to document the P2 measures that have been implemented and the alternative compliance provisions that are requested. Upon approval of the request, the owner or operator would be required to implement any alternative monitoring, reporting, and recordkeeping requirements associated with the P2 compliance alternative. Participation in the program of P2 compliance alternatives is voluntary. Only facilities that qualify for a reduced burden associated with monitoring, reporting, and recordkeeping are expected to participate.

The annual public reporting and recordkeeping burden for this collection of information (averaged over the first 3 years after the effective date of the final rule) is estimated to reduce the burden associated with existing MACT standards by 82,160 labor hours per year at a total annual cost reduction of $4.7 million. The average burden reduction per facility is 137 hours per year. This estimate includes savings for facilities that completely eliminate all HAP emissions and qualify for an exemption from the applicable standards. The estimate also includes savings from reduced monitoring, reporting, and recordkeeping for facilities that implement P2 measures for specific emission points that reduce HAP emissions to, or below, the level required by the applicable standards. There are no capital or startup costs associated with the proposed amendments.

Burden means the total time, effort, or financial resources expended by persons to generate, maintain, retain, disclose, or provide information to or for a Federal agency. This includes the time needed to review instructions; develop, acquire, install, and utilize technology and systems for the purposes of collecting, validating, and verifying information; processing and maintaining information, and disclosing and providing information; adjust the existing ways to comply with any previously applicable instructions and requirements; train personnel to be able to respond to a collection of information; search data sources; complete and review the collection of information; and transmit or otherwise disclose the information.

An Agency may not conduct or sponsor, and a person is not required to respond to, a collection of information unless it displays a currently valid OMB control number. The OMB control number for EPA's regulations are listed in 40 CFR part 9 and 48 CFR chapter 15.

Comments are requested on EPA's need for this information, the accuracy of the provided burden estimates, and any suggested methods for minimizing respondent burden, including through the use of automated collection techniques. Send comments on the ICR to the Director, Collection Strategies Division (2822), U.S. EPA (2136), 1200 Pennsylvania Avenue, NW., Washington, DC 20460; and to the Office of Information and Regulatory Affairs, Office of Management and Budget, 725 17th Street, NW., Washington, DC 20503, marked ''Attention: Desk Officer for EPA.'' Include the ICR number in any correspondence. Because OMB is required to make a decision concerning the ICR between 30 and 60 days after May 15, 2003, a comment to OMB is best assured of having its full effect if OMB receives it by June 16, 2003. The final rule will respond to any OMB or public comments on the information collection requirements contained in the proposed amendments.

C. Regulatory Flexibility Act (RFA) as Amended by Small Business Regulatory Enforcement Fairness Act of 1996 (SBREFA), 5 U.S.C. 601 et seq.

The RFA generally requires an agency to prepare a regulatory flexibility analysis of any proposed rule subject to notice and comment rulemaking requirements under the Administrative Procedure Act or any other statute unless the agency certifies that the rule will not have a significant economic impact on a substantial number of small entities. Small entities include small businesses, small not-for-profit enterprises, and small governmental jurisdictions.

For purposes of assessing the impacts of the proposed amendments on small entities, small entity is defined as: (1) A small business as defined in each applicable subpart; (2) a government jurisdiction that is a government of a city, county, town, school district or special district with a population of less than 50,000; and (3) a small organization that is any not-for-profit enterprise which is independently owned and operated and that is not dominant in its field.

After considering the economic impacts of the proposed amendments on small entities, I certify that this action will not have a significant economic impact on a substantial number of small entities. In determining whether a rule has significant economic impact on a substantial number of small entities, the impact of concern is any significant adverse economic impact on small entities, since the primary purpose of the regulatory flexibility analysis is to identify and address regulatory alternatives which minimize any significant economic impact on a substantial number of small entities (5 U.S.C. 603–604). Thus, an agency may certify that a rule will not have a significant economic impact on a substantial number of small entities if the rule relieves regulatory burden, or otherwise has a positive economic effect on all of the small entities subject to the rule.

Small entities that are subject to MACT standards would not be required to take any action under this proposal; P2 alternative compliance requirements are strictly voluntary. In addition, we expect that any sources implementing P2 compliance alternatives will experience cost savings that will outweigh the cost of requesting the alternative requirements.

The only mandatory cost that would be incurred by air pollution control agencies would be the cost of reviewing sources' requests for P2 compliance alternatives. No small governmental jurisdictions operate their own air pollution control agencies, so none would be required to incur costs under the proposal. In addition, any costs associated with these reviews are expected to be offset by reduced agency oversight obligations for sources with approved P2 alternative compliance requirements.

Based on the considerations above, we have concluded that the proposed amendments will relieve regulatory burden for all affected small entities. Nevertheless, we continue to be interested in the potential impacts of the proposed amendments on small entities

and welcome comments on issues related to such impacts.

D. Unfunded Mandates Reform Act of 1995

Title II of the Unfunded Mandates Reform Act of 1995 (UMRA), Public Law 104–4, establishes requirements for Federal agencies to assess the effects of their regulatory actions on State, local, and tribal governments and the private sector. Under section 202 of the UMRA, EPA generally must prepare a written statement, including a cost-benefit analysis, for proposed and final rules with ''Federal mandates'' that may result in expenditures by State, local, and tribal governments, in aggregate, or by the private sector, of $100 million or more in any 1 year. Before promulgating an EPA rule for which a written statement is needed, section 205 of the UMRA generally requires EPA to identify and consider a reasonable number of regulatory alternatives and adopt the least costly, most cost-effective, or least burdensome alternative that achieves the objectives of the rule. The provisions of section 205 do not apply when they are inconsistent with applicable law. Moreover, section 205 allows EPA to adopt an alternative other than the least costly, most cost-effective, or least burdensome alternative if the Administrator publishes with the final rule an explanation why that alternative was not adopted. Before EPA establishes any regulatory requirements that may significantly or uniquely affect small governments, including tribal governments, it must have developed under section 203 of the UMRA a small government agency plan. The plan must provide for notifying potentially affected small governments, enabling officials of affected small governments to have meaningful and timely input in the development of EPA regulatory proposals with significant Federal intergovernmental mandates, and informing, educating, and advising small governments on compliance with the regulatory requirements.

EPA has determined that these proposed amendments do not contain a Federal mandate that may result in expenditures of $100 million or more for State, local, and tribal governments, in the aggregate, or the private sector in any 1 year. Sources subject to MACT standards would not be required to take any action under this proposal, including sources owned or operated by State, local, or tribal governments; P2 alternative compliance requirements are strictly voluntary. In addition, P2 compliance alternatives are expected to result in reduced burden on any source that obtains approval of such alternative requirements. Under the proposed amendments, a State, local, or tribal air pollution control agency to which we have delegated section 112 authority would be required to review any requests for P2 compliance alternatives submitted by sources in its jurisdiction. However, such requests are not expected to be plentiful and will not approach the $100 million annual threshold. In addition, any costs associated with these reviews are expected to be offset by reduced agency oversight obligations for sources with approved P2 alternative compliance requirements. Thus, the proposed amendments are not subject to the requirements of sections 202 and 205 of UMRA. EPA has determined that the proposed amendments contain no regulatory requirements that might significantly or uniquely affect small governments because they contain no requirements that apply to such governments or impose obligations upon them. Thus, the proposed amendments are not subject to the requirements of section 203 of the UMRA.

E. Executive Order 13132, Federalism

Executive Order 13132, entitled ''Federalism'' (64 FR 43255, August 10, 1999), requires EPA to develop an accountable process to ensure ''meaningful and timely input by State and local officials in the development of regulatory policies that have federalism implications.'' ''Policies that have federalism implications'' is defined in the Executive Order to include regulations that have ''substantial direct effects on the States, on the relationship between the national government and the States, or on the distribution of power and responsibilities among the various levels of government.''

These proposed amendments do not have federalism implications. They will not have substantial direct effects on the States, on the relationship between the national government and the States, or on the distribution of power and responsibilities among the various levels of government, as specified in Executive Order 13132. Although the proposed amendments would require State air pollution control agencies which have voluntarily taken delegation of the part 63 program to conduct case-by-case reviews where sources elect to apply for P2 alternative compliance requirements, the burden on States will not be substantial. In addition, we expect that the overall effect of the proposed amendments will be to reduce the burden on State agencies as their oversight obligations become less demanding for sources with approved P2 alternative compliance requirements. Thus, Executive Order 13132 does not apply to these proposed amendments. Although section 6 of Executive Order 13132 does not apply to the proposed amendments, we consulted extensively with State and local air pollution control officials during the development of this proposal.

In the spirit of Executive Order 13132, and consistent with EPA policy to promote communications between EPA and State and local governments, EPA specifically solicits comment on these proposed amendments from State and local officials.

F. Executive Order 13175, Consultation and Coordination With Indian Tribal Governments

Executive Order 13175, entitled ''Consultation and Coordination with Indian Tribal Governments'' (65 FR 67249, November 6, 2000), requires EPA to develop an accountable process to ensure ''meaningful and timely input by tribal officials in the development of regulatory policies that have tribal implications.''

These proposed amendments do not have tribal implications, as specified in Executive Order 13175. They will not have substantial direct effects on tribal governments, on the relationship between the Federal government and Indian tribes, or on the distribution of power and responsibilities between the Federal government and Indian tribes. Any tribal government that owns or operates a source subject to MACT standards would not be required to take any action under this proposal; P2 alternative compliance requirements are strictly voluntary. In addition, P2 compliance alternatives are expected to result in reduced burden on any source that obtains such alternative requirements. Under the proposed amendments, a tribal government with an air pollution control agency to which we have delegated section 112 authority would be required to review any requests for P2 compliance alternatives submitted by sources in its jurisdiction. However, such requests are not expected to be plentiful, so the effects will not be substantial. In addition, any costs associated with these reviews are expected to be offset by reduced agency oversight obligations for sources with approved P2 alternative compliance requirements. Thus, Executive Order 13175 does not apply to these proposed amendments.

However, in the spirit of Executive Order 13175, and consistent with EPA policy to promote communications between EPA and Indian tribes, EPA

specifically solicits comment on the proposed amendments from tribal officials.

G. Executive Order 13045, Protection of Children From Environmental Health Risks and Safety Risks

Executive Order 13045, entitled ''Protection of Children from Environmental Health Risks and Safety Risks'' (62 FR 19885, April 23, 1997) applies to any rule that: (1) Is determined to be ''economically significant'' as defined under Executive Order 12866, and (2) concerns an environmental health or safety risk that EPA has reason to believe may have a disproportionate effect on children. If the regulatory action meets both criteria, the Agency must evaluate the environmental health or safety effects of the planned rule on children, and explain why the planned regulation is preferable to other potentially effective and reasonably feasible alternatives considered by the Agency.

EPA interprets Executive Order 13045 as applying only to regulatory actions that are based on health or safety risks, such that the analysis required under section 5–501 of the Executive Order has the potential to influence the regulation. These proposed amendments are not subject to Executive Order 13045 because all MACT standards governed by the General Provisions are based on technology performance and not on health or safety risks. Furthermore, the proposed amendments have been determined not to be ''economically significant'' as defined under Executive Order 12866.

H. Executive Order 13211, Actions Concerning Regulations That Significantly Affect Energy Supply, Distribution, or Use

The proposed amendments are not subject to Executive Order 13211, ''Actions Concerning Regulations That Significantly Affect Energy Supply, Distribution, or Use'' (66 FR 28355, May 22, 2001) because they are not a significant regulatory action under Executive Order 12866.

I. National Technology Transfer and Advancement Act

Section 12(d) of the National Technology Transfer and Advancement Act (NTTAA) of 1995, Public Law 104–113,12(d) (15 U.S.C. 272 note) directs EPA to use voluntary consensus standards in its regulatory activities unless to do so would be inconsistent with applicable law or otherwise impractical. Voluntary consensus standards are technical standards (*e.g.*, materials specifications, test methods, sampling procedures, business practices) that are developed or adopted by voluntary consensus standards bodies. The NTTAA directs EPA to provide Congress, through OMB, explanations when the Agency decides not to use available and applicable voluntary consensus standards.

These proposed amendments do not involve technical standards. Therefore, EPA is not considering the use of any voluntary consensus standards. EPA welcomes comments on this aspect of the proposed amendments, specifically, invites the public to identify potentially-applicable voluntary consensus standards and to explain why such standards should be used in the proposed amendments.

List of Subjects in 40 CFR Part 63

Environmental protection, Administrative practice and procedure, Air pollution control, Hazardous substances, Intergovernmental relations, Reporting and recordkeeping requirements.

Dated: May 8, 2003.

Christine Todd Whitman,

Administrator.

For the reasons cited in the preamble, part 63, title 40, chapter I of the Code of Federal Regulations is proposed to be amended as follows:

PART 63—[AMENDED]

1. The authority citation for part 63 continues to read as follows:

Authority: 42 U.S.C. 7401, *et seq.*

Subpart A—[Amended]

2. Section 63.2 is amended by adding, in alphabetical order, definitions for the terms *Pollution prevention* and *Source at a Performance Track member facility* to read as follows:

§ 63.2 Definitions.

* * * * *

Pollution prevention means *source reduction* as defined under the Pollution Prevention Act (42 U.S.C. 13101–13109). The definition is as follows:

(1) *Source reduction* is any practice that:

(i) Reduces the amount of any hazardous substance, pollutant, or contaminant entering any waste stream or otherwise released into the environment (including fugitive emissions) prior to recycling, treatment, or disposal; and

(ii) Reduces the hazards to public health and the environment associated with the release of such substances, pollutants, or contaminants.

(2) The term *source reduction* includes equipment or technology modifications, process or procedure modifications, reformulation or redesign of products, substitution of raw materials, and improvements in housekeeping, maintenance, training, or inventory control.

(3) The term *source reduction* does not include any practice that alters the physical, chemical, or biological characteristics or the volume of a hazardous substance, pollutant, or contaminant through a process or activity which itself is not integral to and necessary for the production of a product or the providing of a service.

* * * * *

Source at a Performance Track member facility means a major or area source located at a facility which has been accepted by EPA for membership in the National Environmental Performance Track program (as described at *http://www.epa.gov/performancetrack*, formerly known as the Achievement Track Program) and is still a member of the program. The Performance Track program is a voluntary public-private partnership that encourages continuous environmental improvement through the use of environmental management systems, local community outreach, and measurable results.

* * * * *

3. Section 63.17 is added to read as follows:

§ 63.17 Pollution prevention exemption.

Consistent with EPA's commitment to promote and encourage pollution prevention, this section provides a mechanism for a major or area source to cease being subject to a particular subpart of this part if the owner or operator has implemented pollution prevention measures that eliminate all hazardous air pollutant emissions from all sources of emissions subject to regulation under that subpart after the initial compliance date specified in that subpart.

(a) *Applicability of pollution prevention exemption.* The owner or operator of a major or area source subject to a subpart in this part that meets the requirements in paragraphs (a)(1) through (3) of this section may submit a written request to the Administrator that the major or area source no longer be subject to the subpart.

(1) The major or area source was subject to the subpart on the first applicable compliance date specified in the subpart.

(2) The owner or operator has implemented pollution prevention

measures (as defined in § 63.2) such that no hazardous air pollutant is emitted from any source of emissions to which any requirement under the subpart applies.

(3) Each emission limitation under the subpart is greater than zero.

(b) *General requirements for pollution prevention exemption.* (1) Until the owner or operator receives written notification that the Administrator has approved a pollution prevention exemption according to this section, the major or area source is subject to all applicable requirements in the subpart.

(2) Upon receipt by the owner or operator of the written notification of approval from the Administrator, the major or area source is no longer subject to the subpart.

(3) The approved exemption applies only as long as no hazardous air pollutant is emitted from any source of emissions to which any requirement under the subpart applies. The owner or operator must notify the Administrator at least 30 days prior to emitting a hazardous air pollutant. If any hazardous air pollutant is emitted from any such source of emissions, the major or area source is subject to the subpart, and the owner or operator must comply with the subpart as of that date.

(4) If the applicability of the subpart is the only reason that the major or area source is subject to requirements under 40 CFR part 70 or 71 (*i.e.*, the title V operating permits program), after receiving the written notification that the source is no longer subject to the subpart, the owner or operator may apply to the permitting authority to no longer be subject to the title V operating permits program and to have the existing permit rescinded.

(c) *Request for pollution prevention exemption.* (1) The owner or operator may submit a written request to the Administrator at any time after the first applicable compliance date for the major or area source to no longer be subject to the subpart. For a source at a Performance Track member facility, the owner or operator must submit the request to the Administrator and is encouraged to submit it to the designated performance track contact within EPA. (The Administrator will designate a central contact within the EPA to facilitate and expedite the review of a Performance Track member facility's request for a pollution prevention exemption.)

(2) The written request may include any information that the owner or operator considers useful to demonstrate that the subpart should no longer apply. At a minimum, the written request must include the information in paragraphs (c)(2)(i) through (c)(2)(vi) of this section.

(i) A statement identifying the subpart and each source of emissions that is currently subject to the subpart, and indicating that the owner or operator is applying for the major or area source to no longer be subject to the subpart.

(ii) A description of the pollution prevention measures used to eliminate the hazardous air pollutant emissions, and a demonstration that the measures qualify as pollution prevention as defined in § 63.2.

(iii) A demonstration that the pollution prevention measures have eliminated all hazardous air pollutant emissions from each source of emissions to which any requirement under the subpart applies.

(iv) Documentation that the subpart does not include a limit of zero hazardous air pollutant emissions for any source of emissions to which any requirement under the subpart applies.

(v) A certification signed by a responsible official that the major or area source will not resume emitting any hazardous air pollutant from any source of emissions to which any requirement under the subpart applies unless the owner or operator notifies the Administrator in writing at least 30 days prior to emitting a hazardous air pollutant.

(vi) A certification signed by a responsible official that the subpart will again apply to the major or area source on the date that the source resumes emitting a hazardous air pollutant, and that the owner or operator will comply with all applicable requirements of the subpart on that date.

(d) *Review and approval or disapproval of request for pollution prevention exemption.* (1) For each request submitted for a pollution prevention exemption in accordance with paragraph (c) of this section, the Administrator will notify the owner or operator in writing of the approval of, or intent to deny approval of, the request within a 45-day notification period after receiving the request. For a source at a Performance Track member facility, the notification period for approval or intent to deny is 30 days after receiving the request.

(2) The major or area source is subject to the subpart until the Administrator notifies the owner or operator in writing of the approval of the request to no longer be subject to the subpart. Failure of the Administrator to notify the owner or operator in writing of the approval of, or intent to deny approval of, the request within the applicable notification period after receiving the request does not constitute approval of the request.

(3) The Administrator may specify additional compliance requirements as a condition of approving the request that the subpart no longer apply.

(4) If the Administrator intends to disapprove the request that the subpart no longer apply, the Administrator will notify the owner or operator in writing of the intent to deny approval within the applicable notification period after receiving the request. The written notification will include the information in paragraphs (d)(4)(i) through (d)(4)(iii) of this section.

(i) Notice of the information and findings on which the intended disapproval is based.

(ii) Notice of opportunity for the owner or operator to present additional information to the Administrator before final action on the request.

(iii) A deadline for presenting the additional information to the Administrator.

(5) If additional information is submitted according to paragraph (d)(4)(ii) of this section, the Administrator will notify the owner or operator in writing of the approval or disapproval of the request within the applicable notification period after receiving any additional information. If additional information has not been submitted by the deadline established according to paragraph (d)(4)(iii) of this section, the Administrator will disapprove the request. Failure of the Administrator to notify the owner or operator in writing of the approval or disapproval within the applicable notification period after receiving the additional information does not constitute approval of the request.

(6) If the Administrator approves the request that the subpart no longer apply, the Administrator will transmit written approval to the owner or operator that includes the elements in paragraphs (d)(6)(i) through (d)(6)(v) of this section. The written approval document shall be enforceable under the CAA.

(i) Identification of the subpart of this part that no longer applies.

(ii) Identification of each specific source of emissions to which the approval would apply, *i.e.*, the source(s) of emissions to which the subpart would no longer apply.

(iii) Any additional compliance measures deemed necessary by the Administrator.

(iv) A requirement that the owner or operator provide written notice to the Administrator at least 30 days prior to emitting a hazardous air pollutant from the source of emissions to which the approval applies.

(v) A condition that the subpart will again apply on the date that the major or area source begins to emit a hazardous air pollutant from the source of emissions to which the approval applies, and that the owner or operator of a major or area source must comply with the subpart on that date.

4. Section 63.18 is added to read as follows:

§ 63.18 Pollution prevention alternative requirements.

Consistent with EPA's commitment to promote and encourage pollution prevention, this section provides a mechanism for a major or area source to replace particular requirements of a subpart of this part with pollution prevention alternative requirements if the owner or operator has implemented pollution prevention measures that reduce hazardous air pollutant emissions to at least the level required by the emission limitation(s) in that subpart after the initial compliance date specified in that subpart.

(a) *Applicability of pollution prevention alternative requirements.* The owner or operator of an affected source subject to emission limitation(s) in a subpart of this part may submit a written request to the Administrator for approval of pollution prevention alternative requirements, including (as desired) alternative compliance demonstration procedures, monitoring, recordkeeping, and reporting. This mechanism may not be used to request alternative test methods or emission limits. The owner or operator of an affected source that is currently exempt from a subpart of this part pursuant to § 63.17 may also apply for alternative requirements. The request for approval of pollution prevention alternative requirements may be for a portion of an affected source (for example, where the emission limitation applies to a source of emissions within the affected source rather than to the entire affected source), for an affected source, or for multiple affected sources (for example, where the subpart includes several affected sources with different emission limitations for each affected source). To apply for pollution prevention alternative requirements, the owner or operator of an affected source must meet the requirements in paragraphs (a)(1) and (2) of this section for each affected source.

(1) The affected source was subject to the subpart on the first applicable compliance date specified in the subpart.

(2) The owner or operator has implemented pollution prevention measures (as defined in § 63.2) to reduce hazardous air pollutant emissions to at least the level that is required by the applicable emission limitation(s), and maintained hazardous air pollutant emissions at that level. If the owner or operator is applying for pollution prevention alternative requirements for an affected source subject to an emission limitation, the hazardous air pollutant emissions must be reduced at least to the level required by the emission limitation that applies to that affected source.

(b) *General requirements for pollution prevention alternative requirements.* (1) Until the owner or operator receives written notification that the Administrator has approved pollution prevention alternative requirements according to this section, the affected source is subject to all applicable requirements in the subpart. For an affected source that is currently exempt from a subpart pursuant to § 63.17, the affected source is subject to all requirements contained in the written approval document for the exemption until the owner or operator receives written notification that the Administrator has approved pollution prevention alternative requirements.

(2) Upon receipt by the owner or operator of the written notification of approval from the Administrator, the approved pollution prevention alternative requirements become the applicable requirements for the source of emissions. Accordingly, the source of emissions is no longer subject to the compliance requirements in the subpart that the alternative requirements specifically replace.

(3) The approved pollution prevention alternative requirements apply only as long as the owner or operator continues to use the approved pollution prevention measures and to reduce hazardous air pollutant emissions to at least the level specified in the approved request. The owner or operator must notify the Administrator at least 30 days prior to discontinuing the approved pollution prevention measures or failing to maintain the hazardous air pollutant reductions. If the owner or operator discontinues the approved pollution prevention measures and/or fails to maintain the hazardous air pollutant reductions specified in the approved request, all applicable requirements of the subpart again apply, and the owner or operator must comply with the applicable requirements as of that date.

(4) At all times after the first applicable compliance date identified in the subpart, the affected source must comply with each applicable requirement in the subpart, unless the Administrator has provided written notification according to paragraph (d)(4) of this section that an applicable requirement under the subpart does not apply.

(c) *Request for pollution prevention alternative requirements.* (1) The owner or operator may submit a written request to the Administrator at any time after the first applicable compliance date for use of pollution prevention alternative requirements. For a source at a Performance Track member facility, the owner or operator must submit the request to the Administrator and is encouraged to submit it to the designated performance track contact within EPA. (The Administrator will designate a central contact within the EPA to facilitate and expedite the review of a Performance Track member facility's request for pollution prevention alternative requirements.)

(2) The written request may include any information that the owner or operator considers useful to demonstrate that pollution prevention alternative requirements are justified. At a minimum, the written request must include the information in paragraphs (c)(2)(i) through (c)(2)(ix) of this section.

(i) A statement identifying the subpart and each source of emissions that is currently subject to the subpart, and indicating that the owner or operator is applying for the use of pollution prevention alternative requirements. (Indicate if the affected source is currently exempt from the subpart pursuant to § 63.17.)

(ii) A description of each source of emissions for which pollution prevention alternative requirements are requested.

(iii) A description of the pollution prevention measures used to reduce hazardous air pollutant emissions from each source of emissions, and a demonstration that the measures qualify as pollution prevention as defined in § 63.2.

(iv) A demonstration that the pollution prevention measures have reduced hazardous air pollutant emissions from each identified source of emissions at least to the level that is required by the applicable emission limitation.

(v) Proposed specific pollution prevention alternative requirements, including (as needed) procedures for demonstrating continuous compliance, monitoring (which may include tracking of material purchases and composition), recordkeeping, and reporting to assure compliance with the commitment to continue using the pollution prevention measures and to maintain the described hazardous air pollutant reductions.

(vi) A citation of each applicable requirement in the subpart that the owner or operator proposes to replace with the proposed pollution prevention alternative requirements, accompanied by an explanation of how the proposed alternative requirements satisfy the intent of the replaced requirements and/or why the replaced requirements are not necessary.

(vii) A certification signed by a responsible official that each source of emissions will not discontinue the pollution prevention measures or fail to maintain the hazardous air pollutant reductions described in the request unless the owner or operator notifies the Administrator in writing at least 30 days prior to discontinuing the pollution prevention measures or failing to maintain the hazardous air pollutant reductions.

(viii) A certification signed by a responsible official that the requirements in the subpart will again apply to each source of emissions on the date that the owner or operator discontinues the pollution prevention measures and/or fails to maintain the hazardous air pollutant reductions, and that the owner or operator will comply with all applicable requirements of the subpart on that date.

(ix) A certification signed by a responsible official that the affected source is subject to and in compliance with all applicable requirements in the subpart not specifically identified in paragraph (c)(2)(vi) of this section (*i.e.*, not proposed to be replaced by alternative compliance requirements).

(d) *Review and approval or disapproval of request for pollution prevention alternative requirements.* (1) For each request submitted according to paragraph (c) of this section, the Administrator will notify the owner or operator of the affected source in writing of the approval or intent to deny approval within a 45-day period after receiving the request. For a source at a Performance Track member facility, the notification period for approval or intent to deny is 30 days after receiving the request.

(2) The affected source is subject to all of the requirements in the subpart until the Administrator notifies the owner or operator in writing of the approval of the request to use pollution prevention alternative requirements. Failure of the Administrator to notify the owner or operator in writing of the approval or intent to deny approval of the request within the applicable notification period after receiving the request does not constitute approval of the request.

(3) The Administrator may specify additional compliance requirements as a condition of approving the pollution prevention alternative requirements.

(4) If the Administrator intends to disapprove the request for pollution prevention alternative requirements, the written notification will include the information in paragraphs (d)(4)(i) through (d)(4)(iii) of this section.

(i) Notice of the information and findings on which the intended disapproval is based.

(ii) Notice of opportunity for the owner or operator to present additional information to the Administrator before final action on the request.

(iii) A deadline for presenting the additional information to the Administrator.

(5) If additional information is submitted according to paragraph (d)(4)(ii) of this section, the Administrator will notify the owner or operator in writing of the approval or disapproval of the request within the applicable notification period after receiving any additional information. If additional information has not been submitted by the deadline established according to paragraph (d)(4)(iii) of this section, the Administrator will disapprove the request. Failure of the Administrator to notify the owner or operator in writing of the approval or disapproval within the applicable notification period after receiving the additional information does not constitute approval of the request.

(6) If the Administrator approves the request for pollution prevention alternative requirements, the Administrator will transmit written approval to the owner or operator that includes the elements listed in paragraphs (d)(6)(i) through (d)(6)(v) of this section. The written approval document shall be enforceable under the CAA.

(i) Identification of each specific source of emissions covered by the approval.

(ii) The pollution prevention alternative requirements that apply to each designated source of emissions, including any additional compliance measures deemed necessary by the Administrator.

(iii) The applicable requirements of the subpart that no longer apply to each designated source of emissions.

(iv) A requirement that the owner or operator provide written notice to the Administrator at least 30 days prior to discontinuing the pollution prevention measures and/or failing to maintain the HAP reductions described in the request.

(v) A condition that the applicable requirements of the subpart will again apply to each designated source of emissions on the date that the owner or operator discontinues the pollution prevention measures and/or fails to maintain the hazardous air pollutant reductions described in the request for that source of emissions, and that the owner or operator must comply with all applicable requirements of the subpart on that date.

(e) *Review and approval or disapproval of request for modification to approved pollution prevention alternative requirements.* (1) If a request for pollution prevention alternative requirements has been approved according to paragraph (d) of this section, the owner or operator may submit a request to modify the pollution prevention alternative requirements.

(2) The request must include, at a minimum, the information specified in paragraphs (c)(2)(i) through (c)(2)(ix) of this section.

(3) The Administrator will approve or disapprove the request according to the procedures in paragraphs (d)(1) through (d)(6) of this section.

(4) Each source of emissions is subject to the previously-approved pollution prevention alternative requirements until the Administrator notifies the owner or operator in writing of the approval of the modified pollution prevention alternative requirements.

[FR Doc. 03–12180 Filed 5–14–03; 8:45 am]

BILLING CODE 6560–50–P

DEPARTMENT OF DEFENSE

48 CFR Parts 208, 219, and 252

[DFARS Case 2002–D003]

Defense Federal Acquisition Regulation Supplement; Competition Requirements for Purchases From a Required Source

AGENCY: Department of Defense (DoD).

ACTION: Proposed rule with request for comments.

SUMMARY: DoD is proposing to amend the Defense Federal Acquisition Regulation Supplement (DFARS) to implement Section 811 of the National Defense Authorization Act for Fiscal Year 2002 and Section 819 of the National Defense Authorization Act for Fiscal Year 2003. Sections 811 and 819 address requirements for conducting market research before purchasing a product listed in the Federal Prison Industries (FPI) catalog, and for use of competitive procedures if an FPI product is found to be noncomparable to products available from the private sector. Section 819 also addresses

limitations on an inmate worker's access to information and on use of FPI as a subcontractor.

DATES: Comments on the proposed rule should be submitted in writing to the address shown below on or before July 14, 2003, to be considered in the formation of the final rule.

ADDRESSES: Respondents may submit comments directly on the World Wide Web at *http://emissary.acq.osd.mil/dar/dfars.nsf/pubcomm*. As an alternative, respondents may e-mail comments to: *dfars@acq.osd.mil*. Please cite DFARS Case 2002–D003 in the subject line of e-mailed comments.

Respondents that cannot submit comments using either of the above methods may submit comments to: Defense Acquisition Regulations Council, Attn: Ms. Susan Schneider, OUSD (AT&L) DPAP (DAR), IMD 3C132, 3062 Defense Pentagon, Washington, DC 20301–3062; facsimile (703) 602–0350. Please cite DFARS Case 2002–D003.

At the end of the comment period, interested parties may view public comments on the World Wide Web at *http://emissary.acq.osd.mil/dar/dfars.nsf*.

FOR FURTHER INFORMATION CONTACT: Ms. Susan Schneider, (703) 602–0326.

SUPPLEMENTARY INFORMATION:

A. Background

Section 811 of the National Defense Authorization Act for Fiscal Year 2002 (Pub. L. 107–107) added 10 U.S.C. 2410n, providing that (1) before purchasing a product listed in the FPI catalog, DoD must conduct market research to determine whether the FPI product is comparable in price, quality, and time of delivery to products available from the private sector; (2) if the FPI product is not comparable in price, quality, and time of delivery, DoD must use competitive procedures to acquire the product; and (3) in conducting such a competition, DoD must consider a timely offer from FPI for award in accordance with the specifications and evaluation factors in the solicitation.

On April 26, 2002, DoD published an interim rule at 67 FR 20687 to implement Section 811 of Public Law 107–107. In addition, DoD conducted a public meeting on June 2, 2002, to hear the views of interested parties. Approximately 60 persons attended the public meeting, and 43 sources submitted written comments in response to the interim rule.

On December 2, 2002, Section 819 of the National Defense Authorization Act for Fiscal Year 2003 (Public Law 107–314) amended 10 U.S.C. 2410n to (1) clarify requirements for conducting market research before purchasing a product listed in the FPI catalog; (2) specify requirements for use of competitive procedures or for making a purchase under a multiple award contract if an FPI product is found to be noncomparable to products available from the private sector; (3) specify that a contracting officer's determination, regarding the comparability of an FPI product to products available from the private sector, is not subject to the arbitration provisions of 18 U.S.C. 4124(b); (4) specify that a DoD contractor may not be required to use FPI as a subcontractor; and (5) prohibit the award of a contract to FPI that would allow an inmate worker access to classified or sensitive information.

This proposed rule further implements the requirements of Section 811 of Public Law 107–107 and implements Section 819 of Public Law 107–314. DoD considered comments received in response to the interim rule published on April 26, 2002, in developing this proposed rule. A discussion of the comments, grouped by subject area, is provided below:

1. Small Business Issues

Comment: DoD should provide guidance on the role of FPI participation in small business set-aside competitions. Some respondents want DoD to restrict FPI participation to those acquisitions that have not been set aside for competition among small businesses. Those respondents indicate that, prior to the issuance of the first interim rule, FPI had been defined as an ''other than small'' business and, therefore, is not eligible to compete for small business set-aside awards. Other respondents commented that FPI participation in small business set-asides will have a positive effect on FPI.

DoD Response: Section 811 of Public Law 107–107 was silent on FPI's relationship to small business set-asides. However, Section 819 of Public Law 107–314 added a definition of ''competitive procedures'' as it applies to 10 U.S.C. 2410n. This definition is the one at 10 U.S.C. 2302(2), which includes, in subsection (2)(D), ''procurements conducted in furtherance of section 15 of the Small Business Act (15 U.S.C. 644) * * *'' Therefore, this proposed rule adds text at 208.601–70, 208.602(a)(iv)(B), subpart 219.5, and Part 252 to provide for the inclusion of FPI in procurements conducted using small business set-aside procedures.

Comment: The Initial Regulatory Flexibility Analysis is correct in stating that the rule will have a positive effect on small business concerns, because the rule permits small businesses to participate in procurements for supplies that were previously allocated to FPI on a priority basis.

DoD Response: DoD expects this rule to have a positive impact on small businesses. If an FPI product is determined to be noncomparable, small businesses will have the opportunity to compete. The rule further provides small businesses an opportunity to compete with FPI as their sole competitor.

2. Micro-Purchase Exclusion

Comment: DoD should exempt micro-purchases ($2,500 and under) from the requirements of the rule. The procedures of the rule are far too burdensome for micro-purchases.

Comment: The requirements of Section 811 and FPI's statute apply regardless of whether the purchase is below the micro-purchase threshold.

DoD Response: 10 U.S.C. 2410n does not authorize DoD to provide an exemption for micro-purchases. However, FPI's Board of Directors recently adopted a resolution exempting purchases at or below $2,500 from FPI clearance requirements. This change is being processed under a separate FAR case. When the FAR is amended to reflect this exemption, the text at DFARS 208.606(1) will become obsolete and will be removed. Therefore, this proposed rule excludes the text at DFARS 208.606(1).

3. Competitive Procedures

Comment: DoD should provide examples of ''competitive procedures.''

DoD Response: Section 819 of Public Law 107–314 added a definition of ''competitive procedures'' as it applies to 10 U.S.C. 2410n. The definition in the proposed rule at 208.601–70 reflects the statutory definition, and also includes competition conducted using simplified acquisition procedures in accordance with FAR Part 13.

4. GSA Multiple Award Schedules

Comment: It is questionable whether the use of GSA multiple award schedules constitutes ''competitive procedures'' as contemplated in Section 811. Confusion arises because orders on GSA schedules do not require issuance of a solicitation or establishment of evaluation factors.

DoD Response: Section 811 of Public Law 107–107 was silent on FPI's relationship to the GSA multiple award schedule program. However, the definition of ''competitive procedures'' added by Section 819 of Public Law 107–314 includes ''the procedures

established by the Administrator of General Services for the multiple award schedule program * * *'' (10 U.S.C. 2302(2)(C)). The definition of ''competitive procedures'' in the proposed rule at 208.601–70 includes the use of GSA multiple award schedules (as one of the procedures in FAR 6.102). The proposed rule provides further clarification, at 208.602(a)(iv)(C), regarding competitive procedures involving multiple award schedules.

Comment: Contracting officers should be authorized to acquire the product off the Federal Supply Schedule, eliminating further competition if Federal Supply Schedule published prices are lower than FPI catalog prices.

DoD Response: Do not concur. This would violate 10 U.S.C. 2410n, which requires market research to determine if the FPI product is comparable. If the FPI product is determined to be noncomparable, competitive procedures must be used to acquire the product.

5. Comparability

Comment: The meaning of ''comparable price, quality, and time of delivery'' is questionable with respect to FPI products compared to private sector competition. Recognizing that it may not be feasible to produce a single general methodology that applies to every product, the rule should require disclosure of specific guidelines and the methodology used. Several respondents believed it was clear from both the statute and the interim rule that, to be found comparable to a product from the private sector, the FPI product must meet all three criteria of price, quality, and time of delivery. The inability to meet any one of the criteria should result in an automatic failure to find FPI comparable. Several other respondents stated exactly the opposite, *i.e.*, that for the FPI product to be considered comparable, it need only be comparable in one of the three areas. Several respondents requested that the final rule contain procedures for making the noncomparability determination.

DoD Response: Section 819(b) of Public Law 107–314 clarifies that DoD may determine an FPI product to be noncomparable based on price, quality, or time of delivery. The proposed rule clarifies this point at 208.602(a)(iv). The comparability determination must be fair, but it is not practicable to set the criteria that will apply to all circumstances. The contracting officer must retain flexibility. The word ''comparable'' is already used throughout the FAR with its common dictionary meaning (''having sufficient features in common with something else to afford comparison''). To support the comparability determination, a requirement for a written document has been included in the proposed rule at 208.602(a)(ii). This document will include an assessment of the three factors, based on the results of market research that compares FPI products to those available from the private sector.

Comment: Eliminate the requirement to allow FPI to compete if, based on market research, it is determined noncomparable to the private sector. The private sector does not receive two chances, so FPI should not either.

DoD Response: Do not concur. The recommended change does not comply with 10 U.S.C. 2410n, which requires that an offer from FPI be considered if made in a timely fashion.

Comment: Section 811 is not appropriate for build-to-print items (spares) that support older weapons systems. It is more appropriate for commercial-type items, where it is easier to conduct market surveys for comparison purposes. In some cases, the organization uses the Government's depot cost to fabricate, as a basis of comparison. The use of the term ''private sector'' invalidates that comparison and requires a further comparison before award to FPI.

DoD Response: It appears that 10 U.S.C. 2410n was tailored more for commercial-type items than build-to-print items. However, DoD organizations must comply with its requirements.

Comment: The rule does not address buys of military-unique items, because those items do not have catalog prices. Each requirement is built to customer specification and must be individually quoted. There are no catalogs to consult for pricing and delivery, from either FPI or commercial sources. Section 811 would require following manual procedures, outside of automated procurement systems, and cause additional unnecessary lead time. In these situations, is it permissible to solicit commercial sources and FPI simultaneously and have the competitive offers and subsequent award decision serve as the basis for making the determination of whether the FPI product is comparable?

DoD Response: Although 10 U.S.C. 2410n does not prohibit this method of conducting comparability determinations, the statute clearly establishes an ''if-then'' situation, *i.e.*, if the Secretary makes a noncomparability determination, then he uses competitive procedures. Therefore, section 208.602 of the proposed rule addresses the market research and resulting comparability determination as a step separate from the solicitation process, to adhere to the ''if-then'' approach established in 10 U.S.C. 2410n.

6. The Resolution Process

Comment: Does the arbitration panel affect the resolution of protests? In enacting Section 811, Congress was silent regarding the arbitration panel's authority or whether a clearance or waiver from FPI is required if the market research indicates that FPI's products are not comparable to those available from the private sector.

DoD Response: Although Section 811 was silent on this matter, Section 819 of Public Law 107–314 provides that the contracting officer's determination, regarding the comparability of FPI products or services to those available from the private sector that best meet DoD's needs in terms of price, quality, and time of delivery, is not subject to 18 U.S.C. 4124(b). 18 U.S.C. 4124(b) addresses the arbitration board process as it relates to disputes as to price, quality, character, or suitability of FPI products. The proposed rule amends the text at DFARS 208.602(a)(i) to clarify that the arbitration board process does not apply to a contracting officer's comparability determination.

7. Delegation of Authority

Comment: Will the determination to award to other than FPI be delegated down to the contracting officer level, as opposed to being kept at the department or agency level as stated in 208.602?

DoD Response: The proposed rule amends DFARS 208.602(a) to provide contracting officers the authority to make comparability determinations with regard to FPI products. This amendment is consistent with the language in Section 819(c)(1) of Public Law 107–314.

8. Unilateral Decision at 208.602(a)

Comment: It is inappropriate for the rule to state that the comparability determination is ''a unilateral decision made solely at the discretion of the department or agency.'' This sentence should either be stricken or clarified. The provisions of the rule may conflict with other statutes or lead to possible misapplication of applicable law. DoD should be afforded discretion in making its decision, however, there must be guidance setting forth the criteria so the decisions are not arbitrary or capricious.

DoD Response: Do not concur. The comparability determination is clearly and solely a DoD determination.

9. Terminology

Comment: The words ''FPI Schedule'', in the first sentence of 208.602(a),

should be changed to ''FPI Catalog'' to conform to the language in Section 811.

DoD Response: Do not concur. The word ''Schedule'' has been retained to conform to the terminology used in FAR subpart 8.4.

10. Previous DoD Guidance

Comment: The validity of a policy memorandum from the Office of the Assistant Secretary of Defense, dated October 1988, that directs use of GSA schedules as a ''quick and efficient'' way to obtain furniture for DoD activities is questionable.

DoD Response: DoD recommends that the respondent not use this memorandum for guidance. The policy has been superceded by 10 U.S.C. 2410n and its implementing regulations.

11. Sole-source Purchases

Comment: Is there a requirement to perform a comparability determination if the need is to be acquired on a sole-source basis?

DoD Response: 10 U.S.C. 2410n does not provide for sole-source purchases. If a product is on the FPI Schedule, the purchaser must follow the DFARS policy implementing 10 U.S.C. 2410n.

12. Architect-engineer Contracts

Comment: There is concern about mandating the use of FPI products for architect-engineer contracts. The rule should state that ''FPI may not be specified as a source, nor shall an FPI product be prescribed or recommended in any design or specification prepared by an architect or engineer under contract to the Government. * * *''

DoD Response: The requirements of 10 U.S.C. 2410n are imposed on the Government, not on the contractor. Section 819 of Public Law 107–314 added text prohibiting DoD from requiring a contractor or potential contractor to use FPI as a subcontractor or supplier. This prohibition is addressed in the proposed rule at 208.670.

13. Use of the Term ''Solicitation''.

Comment: Use of the term ''solicitation'' means one must proceed with issuing a formal solicitation whenever an agency determines that an FPI product is not comparable.

DoD Response: Do not concur. As defined in FAR 2.101, ''solicitation'' means any request to submit offers or quotations to the Government. For further clarification, the proposed rule separately addresses the use of multiple award schedules at 208.602(a)(iv)(C).

14. Use of the Phrase ''That Best Meet the Government's Needs''.

Comment: The rule should be revised to conform to the text of Section 811 by deleting the phrase ''that best meet the Government's needs'' at each of the three locations where it appears. This phrase does not meet the intent of the statute.

DoD Response: DoD used the phrase ''that best meet the Government's needs'' in the interim rule to provide needed guidance in this area. This phrase was included in Section 819 of Public Law 107–314 and, therefore, has been retained in the proposed rule.

15. Application of Priorities for Use of Government Supply Sources.

Comment: If the FPI item is not comparable, can the Government go directly to JWOD?

DoD Response: No. FPI can still fulfill the requirement, even though it has been determined to be noncomparable.10 U.S.C. 2410n requires DoD to consider a timely offer from FPI under such circumstances.

This rule was subject to Office of Management and Budget review under Executive Order 12866, dated September 30, 1993.

B. Regulatory Flexibility Act

This rule may have a significant economic impact on a substantial number of small entities within the meaning of the Regulatory Flexibility Act, 5 U.S.C. 601, *et seq.*, because the rule will permit small entities to compete with FPI for DoD contract awards under certain conditions. An initial regulatory flexibility analysis has been prepared and is summarized as follows: This rule proposes amendments to DoD policy pertaining to the acquisition of products from FPI. The rule implements 10 U.S.C. 2410n. The impact of the rule is unknown at this time. However, the rule could benefit small business concerns that offer products comparable to those listed in the FPI Schedule, by permitting those concerns to compete for DoD contract awards.

A copy of the analysis may be obtained from the point of contact specified herein. DoD invites comments from small businesses and other interested parties. DoD also will consider comments from small entities concerning the affected DFARS subparts in accordance with 5 U.S.C. 610. Such comments should be submitted separately and should cite DFARS Case 2002–D003.

C. Paperwork Reduction Act

The Paperwork Reduction Act does not apply because the rule does not impose any information collection requirements that require the approval of the Office of Management and Budget under 44 U.S.C. 3501, *et seq.*

List of Subjects in 48 CFR Parts 208, 219, and 252

Government procurement.

Michele P. Peterson,

Executive Editor, Defense Acquisition Regulations Council.

Therefore, DoD proposes to amend 48 CFR Parts 208, 219, and 252 as follows:

1. The authority citation for 48 CFR Parts 208, 219, and 252 continues to read as follows:

Authority: 41 U.S.C. 421 and 48 CFR Chapter 1.

PART 208—REQUIRED SOURCES OF SUPPLIES AND SERVICES

2. Section 208.601–70 is added to read as follows:

208.601–70 Definitions.

As used in this subpart—

Competitive procedures includes the procedures in FAR 6.102, the set-aside procedures in FAR subpart 19.5, and competition conducted in accordance with FAR part 13.

Market research means obtaining specific information about the price, quality, and time of delivery of products available in the private sector and may include techniques described in FAR 10.002(b)(2).

3. Sections 208.602 and 208.606 are revised to read as follows:

208.602 Policy.

(a)(i) Before purchasing a product listed in the FPI Schedule, conduct market research to determine whether the FPI product is comparable to products available from the private sector that best meet the Government's needs in terms of price, quality, and time of delivery (10 U.S.C. 2410n). This is a unilateral determination made at the discretion of the contracting officer. The procedures of FAR 8.605 do not apply.

(ii) Prepare a written determination that includes supporting rationale explaining the assessment of price, quality, and time of delivery, based on the results of market research comparing FPI products to those available from the private sector.

(iii) If the FPI product is comparable, follow the policy at FAR 8.602(a).

(iv) If the FPI product is not comparable in one or more of the areas of price, quality, and time of delivery—

(A) Acquire the product using—

(1) Competitive procedures; or

(2) The fair opportunity procedures in FAR 16.505, if placing an order under a multiple award task or delivery order contract;

(B) Include FPI in the solicitation process and consider a timely offer from FPI for award in accordance with the requirements and evaluation factors in the solicitation, including solicitations issued using small business set-aside procedures; and

(C) When using a multiple award schedule issued under the procedures of FAR subpart 8.4—

(1) Establish and communicate to FPI the requirements and evaluation factors that will be used as the basis for selecting a source, so that an offer from FPI can be evaluated on the same basis as the schedule holder; and

(2) Consider a timely offer from FPI.

208.606 Exceptions.

For DoD, FPI clearances also are not required when the contracting officer makes a determination that the FPI product is not comparable to products available from the private sector that best meet the Government's needs in terms of price, quality, and time of delivery, and the procedures at 208.602(a)(iv) are used.

4. Sections 208.670 and 208.671 are added to read as follows:

208.670 Performance as a subcontractor.

Do not require a contractor, or subcontractor at any tier, to use FPI as a subcontractor for performance of a contract by any means, including means such as—

(a) A solicitation provision requiring a potential contractor to offer to make use of FPI products or services;

(b) A contract specification requiring the contractor to use specific products or services (or classes of products or services) offered by FPI; or

(c) Any contract modification directing the use of FPI products or services.

208.671 Protection of classified and sensitive information.

Do not enter into any contract with FPI that allows an inmate worker access to any—

(a) Classified data;

(b) Geographic data regarding the location of—

(1) Surface and subsurface infrastructure providing communications or water or electrical power distribution;

(2) Pipelines for the distribution of natural gas, bulk petroleum products, or other commodities; or

(3) Other utilities; or

(c) Personal or financial information about any individual private citizen, including information relating to such person's real property however described, without the prior consent of the individual.

PART 219—SMALL BUSINESS PROGRAMS

5. Section 219.502–70 is added to read as follows:

219.502–70 Inclusion of Federal Prison Industries, Inc.

When using competitive procedures in accordance with 208.602(a)(iv), include Federal Prison Industries, Inc. (FPI), in the solicitation process and consider a timely offer from FPI.

6. Section 219.508 is added to read as follows:

219.508 Solicitation provisions and contract clauses.

(c) Use the clause at FAR 52.219–6, Notice of Total Small Business Set-Aside, with 252.219–70XX, Alternate A, when the procedures of 208.602(a)(iv) apply to the acquisition.

(d) Use the clause at FAR 52.219–7, Notice of Partial Small Business Set-Aside, with 252.219–70YY, Alternate A, when the procedures of 208.602(a)(iv) apply to the acquisition.

PART 252—SOLICITATION PROVISIONS AND CONTRACT CLAUSES

7. Sections 252.219–70XX and 252.219–70YY are added to read as follows:

252.219–70XX Alternate A.

Alternate A (XXX 2003)

As prescribed in 219.508(c), substitute the following paragraph (b) for paragraph (b) of the clause at FAR 52.219–6:

(b) *General.* (1) Offers are solicited only from small business concerns and Federal Prison Industries, Inc. (FPI). Offers received from concerns that are not small business concerns or FPI shall be considered nonresponsive and will be rejected.

(2) Any award resulting from this solicitation will be made to either a small business concern or FPI.

252.219–70YY Alternate A.

Alternate A (XXX 2003)

As prescribed in 219.508(d), add the following paragraph (d) to the clause at FAR 52.219–7:

(d) Notwithstanding paragraph (b) of this clause, offers will be solicited and considered from Federal Prison Industries, Inc., for both the set-aside and non-set-aside portion of this requirement.

[FR Doc. 03–12190 Filed 5–14–03; 8:45 am]

BILLING CODE 5001–08–P

DEPARTMENT OF TRANSPORTATION

National Highway Traffic Safety Administration

49 CFR Part 571

[DOT Docket No. NHTSA–03–14907]

RIN 2127–AI43

Federal Motor Vehicle Safety Standards; Transmission Shift Lever Sequence, Starter Interlock, and Transmission Braking Effect

AGENCY: National Highway Traffic Safety Administration (NHTSA), DOT.

ACTION: Notice of proposed rulemaking (NPRM).

SUMMARY: This document proposes to amend the starter interlock requirements of Federal Motor Vehicle Safety Standard No. 102 to permit a vehicle's engine to stop and restart automatically after the driver has initially started the vehicle. The amendment would facilitate the development of propulsion systems, such as hybrid/electric systems, that conserve energy and reduce emissions by stopping the engine (internal combustion engine) when it is not needed. To prevent inadvertent vehicle motion in reverse gear that may result from a driver shifting error, the proposed amendment would allow a propulsion system to start and stop automatically in reverse gear only if the system exhibits, at least, a minimum ''creep force'' when the engine is stopped.

DATES: You should submit your comments early enough to ensure that Docket Management receives them not later than July 14, 2003.

ADDRESSES: You should mention the docket number of this document in your comments and submit your comments in writing to: Docket Management, Room PL–401, 400 Seventh Street, SW., Washington, DC 20590.

You may call the Docket at 202–366–9324. You may visit the Docket from 10 a.m. to 5 p.m., Monday through Friday.

FOR FURTHER INFORMATION CONTACT: For non-legal issues, you may call Mr. William Evans, Office of Crash Avoidance Standards at (202) 366–2272. His FAX number is (202) 493–2739.

For legal issues, you may call Ms. Dorothy Nakama, Office of the Chief

Counsel at (202) 366–2992. Her FAX number is (202) 366–3820.

You may send mail to both of these officials at National Highway Traffic Safety Administration, 400 Seventh St., SW., Washington, DC 20590.

SUPPLEMENTARY INFORMATION:

Table of Contents

I. Executive Summary
II. What is the Safety Need for this Rulemaking?
III. How Different Hybrid/Electrical Systems Work
A. How the Toyota Hybrid System Works—The Prius
B. How Idle-Stop Technology Works—The Honda Insight
IV. Previous Related Rulemaking Action—ZEMCO Petition
V. Notice of Proposed Rulemaking
A. Reed Interpretation Letter, the Significance of Reverse Drive and the Park Position
B. Safety Importance of Creep Force in Cueing the Driver—Creep Force in Reverse
C. The Level of Creep Force Specified
D. The Safety Need for Fail-Safe Provisions for Automatic Engine Stopping and Restarting While the Transmission and/or Transmission Shift Lever Are in Gear
VI. Leadtime
VII. Regulatory Analyses and Notices
A. Executive Order 12866; DOT Regulatory Policies and Procedures
B. Executive Order 13132 (Federalism)
C. Executive Order 13045 (Economically Significant Rules Disproportionately Affecting Children)
D. Executive Order 12778 (Civil Justice Reform)
E. Regulatory Flexibility Act
F. National Environmental Policy Act
G. Paperwork Reduction Act
H. National Technology Transfer and Advancement Act
I. Unfunded Mandates Reform Act of 1995
J. Data Quality Guidelines
K. Plain Language
L. Regulation Identifier Number (RIN)
Proposed Regulatory Text

I. Executive Summary

The starter interlock requirement of Federal Motor Vehicle Safety Standard (FMVSS) No. 102 (presently at S3.1.3) states ''the engine starter shall be inoperative when the transmission shift lever is in a forward or reverse drive position.'' The purpose of this requirement is to prevent injuries and death from the unexpected motion of a vehicle when the driver starts the vehicle with the transmission inadvertently in a forward or reverse gear. Two recently introduced vehicles, the Toyota Prius and the Honda Insight, are powered by hybrid/electric systems (the Toyota Hybrid System (THS) and Honda's Idle-stop Technology (IST)) that permit their gasoline engines to stop and restart automatically while the transmission shift lever is in a drive position.

Each manufacturer requested us to interpret S3.1.3 as it applied to these new vehicles. In interpretation letters to Toyota (November 1, 1999) and Honda (January 17, 2001), we concluded that S3.1.3 would not prohibit either system. In each case we based our interpretations on a finding that the system met S3.1.3's underlying purpose of ensuring that the vehicle will not lurch forward or backward during driver activation of the engine starter because driver activation of the engine starter is inoperative when the transmission shift lever is in a drive position. We also noted that these new systems were more complex than those on vehicles that existed when S3.1.3 was first adopted, and that we planned to conduct rulemaking to update the requirements of FMVSS No. 102. Pending completion of the rulemaking, we stated that we would interpret S3.1.3 as requiring that *driver activation* of the engine starter must be inoperative when the transmission shift lever is in a forward or reverse drive position.

This notice proposes to amend S3.1.3 to accommodate these new technologies, while preserving the safety purpose of the standard. With respect to vehicles with automatic transmissions, the agency proposes that, after activation of the vehicle's propulsion system by the driver, the engine may stop and restart automatically when the transmission shift lever is in any forward drive gear.

We also propose to permit the engine to start and stop automatically when the transmission shift lever is in Reverse, but only if the vehicle's propulsion system provides, at least, a minimum creep force in Reverse when the engine is stopped, the accelerator is released and the propulsion system is activated. In vehicles whose engines automatically start and stop in Reverse, creep force is a force that must be overcome by driver braking even when the engine is not running. Creep force is significant relative to rearward motion in that it serves to warn drivers of impending rearward motion before the driver fully releases the brake (as does an internal combustion engine (ICE) automatic transmission only vehicle with the engine running).

In ICE automatic transmission only vehicles, creep force is the motive force applied to the vehicle by the idling engine and automatic transmission whenever the transmission shift lever is in a drive position. Creep force occurs in the direction indicated by the automatic transmission shift lever position and provides enough force to cause motion of a vehicle loaded to its Gross Vehicle Weight Rating (GVWR) on a level, paved surface before the service brake pedal is completely released. Although not required by the Federal Motor Vehicle Safety Standards, creep force exists on virtually all vehicles powered by ICE engines and equipped with automatic transmissions.

To measure creep force, we propose a test procedure that will be applicable to any vehicle whose propulsion system provides for automatic stopping and restarting when the transmission is in Reverse.

II. What Is the Safety Need for This Rulemaking?

This rulemaking addresses the starter interlock requirement in S3.1.3 of FMVSS No. 102, which currently states that the engine starter shall be inoperative when the transmission shift lever is in a forward or reverse drive position. The requirement was adopted as part of the original standard in 1968 for the purpose of preventing injuries and death from the unexpected surging of a vehicle forward or rearward in cases where the driver starts the vehicle while its transmission is inadvertently in a forward or reverse drive gear.

The development of the Toyota Hybrid System (THS) used on the Prius introduced a low emission, fuel saving propulsion system that, by design, allows the engine to stop and restart automatically while the transmission shift lever remains in a drive position. The design of the THS satisfies the concern addressed in S3.1.3, that the driver not be able to activate the engine starter when the transmission shift lever is in a forward or reverse drive position; however, the THS design is not in compliance with S3.1.3's literal meaning. Until the development of the THS, it was not necessary for S3.1.3 to differentiate between driver activation and automatic activation of the engine starter as the driver always activated the starter.

In response to a request by Toyota regarding the Prius, NHTSA issued an interpretation letter of November 1, 1999, in which we ruled that S3.1.3 applied to the driver's activation of the engine starter when the transmission shift lever is in a forward or reverse drive position, not to automatic activation of the engine starter. The THS raised no other FMVSS No. 102 issues. From a driver's perspective, the THS/Prius operates like an ICE automatic transmission only vehicle. The engine stopping and restarting mode is in effect in both forward and reverse drive gears, and regardless of whether the gasoline engine or the electric motor is powering

the vehicle, the propulsion system provides a creep force that must be opposed by the vehicle brake in order to keep the vehicle stopped when the propulsion system is on, the accelerator is released and the transmission is in gear. Creep force alerts the driver to the vehicle's direction of travel while the driver is in the process of releasing the brake pedal and minimizes the chance that the driver will be surprised due to shifting errors when he depresses the accelerator pedal. Creep force is a characteristic inherent to ICE automatic transmission only vehicles.

Later, Honda introduced the IST on the Insight equipped with a continuously variable transmission (CVT) and requested an interpretation similar to the one that NHTSA provided to Toyota. IST is another hybrid/electric low emission, fuel saving system, which allows the gasoline engine to stop and restart automatically while the transmission shift lever is in a drive position. IST also satisfies FMVSS No. 102, S3.1.3's concern about driver shifting errors during driver activation of the engine starter because it renders driver activation of the engine starter inoperative when the transmission shift lever is in a forward or reverse drive position. However, it is not in agreement with the literal meaning of S3.1.3. IST is similar to Toyota's THS relative to starter interlock, but there are significant differences in other areas of operation. IST does not provide creep force when the engine is stopped, and it is employed only in the forward drive gears. From a driver's perspective, IST does not operate quite like an ICE automatic transmission only vehicle. IST does not shut the engine off in Reverse and therefore creep force is retained in Reverse by means of the idling gasoline engine and automatic transmission. In an interpretation of January 17, 2001, we ruled that IST would be permitted under S3.1.2, citing the Toyota interpretation, but because the Insight does not act like an ICE automatic transmission only vehicle, we stated that the Honda situation raised new issues that would necessitate further rulemaking.

This notice proposes that an exception be added to FMVSS No. 102 to accommodate these new hybrid/electric technologies while preserving the safety purpose of the standard. It proposes that for automatic transmission equipped vehicles, after the driver activates the vehicle's propulsion system, the engine may stop and restart automatically while the transmission shift lever is in any forward drive gear. It also proposes that if the vehicle's propulsion system provides a creep force in Reverse (when the engine is stopped, the accelerator is released, and the propulsion system is on) that has a ratio to gross vehicle weight rating (GVWR) of at least .015, the engine may stop and restart automatically when the transmission shift lever is in Reverse. This amendment permits new technologies that allow the engine to stop and restart automatically with the transmission shift lever in gear, but minimizes the possibility that the vehicle will move in a direction unexpected to the driver upon restart. Automatic engine restarting would be permitted only in forward drive gears so that drivers learn to associate restarting with forward motion. However, automatic engine restarting is allowed for vehicles that provide a rearward creep force in Reverse that must be overcome by driver braking even when the engine is not running. Because such vehicles warn their drivers of impending rearward motion before the driver fully releases the brake (as does an ICE automatic transmission only vehicle with the engine running), restarting in Reverse would also be permitted.

III. How Different Hybrid/Electric Systems Work

So that the reader fully understands the safety need to conduct this rulemaking, and what NHTSA seeks to accomplish in amending FMVSS No. 102, the following describes how the Toyota Prius and the Honda Insight operate. NHTSA considers these two vehicles as examples of the type of electronic control systems that we can expect more of in the future, and that we propose to amend FMVSS No. 102 to accommodate. NHTSA continues to ensure that FMVSS No. 102 meets the need for safety. Significant differences between the Toyota and the Honda approaches are explained, and the consequences of these differences for this rulemaking are discussed.

A. How the Toyota Hybrid System Works—the Prius

As explained further, from the driver's perspective, the THS operates like an ICE automatic transmission only vehicle. The THS, which is currently in use on the Prius, uses both an electric motor and a gasoline engine to provide motive power. The electric motor is the primary source of motive power and is also used to start the engine. The engine is used to provide supplemental motive power and to charge the batteries. Before the driver may start or turn on the vehicle, the transmission shift lever must be in Park. After the vehicle is started or turned on by the driver, the gasoline engine may or may not start. If the engine is within the range of normal operating temperature and battery power is sufficient, the engine will not start, but the electric motor is immediately available to provide motive power and creep force. If battery power is low or the engine is not within normal operating temperature, the gasoline engine will start in order to warm up the engine and/or charge the batteries (to power the electric motor), then it will shut off. During normal vehicle operation, the engine automatically stops when the Engine Control Unit (ECU) determines that the vehicle does not need the engine to provide additional power (motive power and/or electrical power). Also, the engine automatically restarts when the ECU determines that the vehicle needs extra power (motive power and/or electrical power). When the engine is required, it may start when the transmission and the transmission shift lever are in drive positions.

The THS functions in all forward and reverse drive gears. The THS also provides creep force in all forward and reverse drive gears regardless of whether the engine or electric motor is powering the vehicle at the time. Normally, when the batteries are charged, the engine is within normal temperature range and the accelerator is depressed, the vehicle will begin to accelerate by means of power from the electric motor and will move in the direction both selected by the automatic transmission shift lever and, as previously indicated, by creep force. As the demand for acceleration increases beyond the capability of the electric motor and/or as the vehicle batteries require recharging, the same electric motor will start the vehicle engine (while the automatic transmission/transmission shift lever remain in drive positions), to provide additional motive and/or electrical power. When stopping, the electric motor aids in recharging the batteries through regenerative braking.

B. How Idle-Stop Technology Works—the Honda Insight

Idle-stop technology (IST) is currently used on the Insight and more recently on the Civic hybrid electric vehicle (system is identical to the Insight), but in the future it may be used on other Honda and Acura models that are not hybrids. Both hybrid vehicles are powered by a low-horsepower gasoline engine assisted by an electric motor. When the driver manually engages the starter to start the vehicle's engine, the transmission shift lever must be in Park or Neutral. During vehicle operation, the engine is always running except during

certain circumstances while the vehicle is stopped. Under normal conditions after the vehicle has been driven with the transmission in a forward drive position at a speed greater than or equal to 15 kph (9.32 mph), when the driver stops the vehicle by depressing the service brake pedal, the gasoline engine will stop and the transmission will automatically shift to Neutral even though the transmission shift lever remains in Drive. When the driver removes his foot from the service brake pedal, hydraulic brake pressure is maintained, the starter automatically engages the vehicle engine and the engine starts up. After the engine starts, the transmission automatically shifts internally from Neutral back to Drive, hydraulic brake fluid pressure is automatically released, and the vehicle may start to move slowly forward due to creep force from the idling engine and automatic transmission. When the accelerator is depressed, the vehicle moves in the direction directed by the transmission shift lever position.

Since IST does not provide creep force when the service brake is applied, there is no indication of the direction of vehicle movement until after the driver's foot has been completely removed from the service brake pedal. After release of the service brake pedal, the service brakes remain fully engaged until the engine is restarted and the transmission automatically shifts into a forward drive position. This automatic chain of events occurs very rapidly after the service brake pedal is released, however, the sequence may or may not be completed by the time the driver depresses the accelerator.

As IST is not in effect in Reverse, the engine does not shut off when the transmission is in Reverse. Therefore, the propulsion system provides creep force as a result of the idling engine and the automatic transmission. In forward gears, when the accelerator is depressed, the engine or the engine assisted by the electric motor accelerates the vehicle. The electric motor is used to assist the gasoline engine when extra motive power is required, and to restart the engine after idle-stop.

The Honda system receives input from numerous sensors throughout the vehicle. The ECU will not allow the engine to stop when the vehicle comes to a stop and the transmission lever is in Reverse, Low or S mode (another low gear); immediately after the engine starts; when the air conditioning is in ''Auto Switch'' mode; when the engine water temperature, the transmission oil temperature, ambient temperature or energy in the battery are low; when electrical load is high; and during sudden (panic) braking. Also, when the engine is stopped and the transmission shift lever is shifted from Drive to Reverse, Low, or Park, the engine restarts immediately while the service brake pedal is depressed.

IV. Previous Related Rulemaking Action—ZEMCO Petition

In 1979, ZEMCO Inc. asked for an interpretation of S3.1.3 in FMVSS No. 102. ZEMCO wanted to market an add-on fuel savings device that conflicted with S3.1.3. The ZEMCO system could be installed on all vehicles as original or after-market equipment and would automatically control the shutdown and restarting of the vehicle engine in order to conserve fuel at times when the vehicle would be otherwise stopped with the engine running at idle speed. The ZEMCO system did not exhibit creep force when the engine was stopped and was employed in both the forward and reverse gears.

As a result of ZEMCO's request for an interpretation and subsequent petition for rulemaking, NHTSA commenced rulemaking to amend S3.1.3. As part of the rulemaking process, NHTSA tested the operational safety of the ZEMCO system. Several safety concerns surfaced during testing such as the delay in engine restarting, the lack of an automatic shut-off feature for the system when the driver parks the vehicle and leaves without specifically turning off the fuel savings system, the effects on other vehicle functions, vehicle stalling on restart and the avoidance of engine shutdown under certain conditions. These safety concerns resulted in the agency publishing a notice of termination of rulemaking in the **Federal Register** of March 27, 1984 (49 FR 11692). In the termination notice, NHTSA also encouraged further research and development in the area of fuel economy devices.

V. Notice of Proposed Rulemaking

The following describes NHTSA's rulemaking proposal to amend FMVSS No. 102 and the four major issues addressed in the rulemaking: first, the significance of reverse drive and the park position; second, the importance of creep force; third, the level of creep force to be specified; and fourth, the safety need for fail-safe provisions for automatic engine stopping and restarting while the transmission and/or transmission shift lever are in gear.

A. Reed Interpretation Letter, the Significance of Reverse Drive and the Park Position

In 1991, Mr. Brett Reed of Morse Controls, Inc. submitted a request for an interpretation of FMVSS No. 102 as it applies to electronic transmission shift controls. Mr. Reed specifically asked about controls that operate automatic transmissions used in heavy trucks and recreational vehicles (RVs) and on solenoid operated power shift transmissions used in various on and off highway vehicles. In his letter, Mr. Reed cited S3.1.3, which requires that the engine starter be inoperative when the transmission shift lever is in a forward or reverse drive position. The main question posed was if the intent of the standard was to render the starter engine inoperative when the transmission shift lever is in a forward or reverse drive position or when the transmission was in a forward or reverse drive gear. Mr. Reed noted that when FMVSS No. 102 was written, transmission levers communicated with transmissions via mechanical linkages and therefore the transmission shift lever always matched the gear position of the transmission.

With the introduction of electronic shift systems and fully electronic controlled transmissions, communication between the transmission shift lever and the transmission is rarely performed by direct mechanical means. This raises the possibility that the transmission shift lever position may not match the gear currently engaged by the transmission in situations where the transmission control circuitry overrides the shift lever selection in the interest of safety, transmission protection or other criteria related to performance and specific applications. The concern was that some systems automatically shift to Neutral within the transmission when the engine is started, however, the transmission shift lever remains in some other position. In these cases, the transmission shift lever position does not coincide with the status of the transmission. Mr. Reed sought an interpretation stating that the intention of S3.1.3 was that the engine starter shall be inoperative when the transmission is in a forward or reverse drive position.

NHTSA's response of September 16, 1991 essentially stated that the transmission shift lever position and the gear position of the transmission must always agree. Since this interpretation in 1991, electronically controlled transmissions have become more prevalent. Today, electronically controlled transmissions are not only on large trucks and recreational vehicles, but are also appearing in the passenger car fleet. In addition, vehicle electronic control systems and control algorithms have become more sophisticated, which

allow for more safeguards and fail-safe systems. These systems are capable, on a limited basis, of overriding the driver's input or lack of input to achieve optimal vehicle performance and safety.

The Honda Insight with the continuously variable transmission, which employs idle-stop technology (IST) and which NHTSA permitted in an interpretation letter of January 17, 2001, highlights the decreasing relevance of the shift lever position in certain situations. IST allows the engine to stop, the transmission to briefly shift to Neutral while the engine is automatically restarting, then allows the transmission to shift back to Drive while the transmission shift lever remains in a drive position. During this procedure, however, service brake pressure is maintained even after the driver has released the service brake pedal. This scenario was not disputed in the Honda interpretation even though it was in conflict with the 1991 interpretation letter to Mr. Reed.

NHTSA intends that the Honda interpretation supersede the Reed interpretation to the extent that, from now on, for all vehicles, when the transmission shift lever is in a forward drive position, the transmission gear may be in another forward drive position or Neutral. When the transmission shift lever is in Reverse, the transmission gear must be in reverse gear. Additionally, when the driver has selected the transmission shift lever ''Park'' position, the transmission must always be in the Park position. This restriction is necessary to ensure that the vehicle does not start moving when the driver does not expect the vehicle to move, and cause the driver to panic. We are proposing an additional provision for vehicles with systems that allow the engine to start and stop automatically after driver activation of the engine starter which states that when the transmission shift lever is in Park, the engine automatic start/stop system shall not take the transmission out of Park.

B. Safety Importance of Creep Force in Cueing the Driver—Creep Force in Reverse

In ICE automatic transmission only vehicles, creep force is the motive force applied to the vehicle by the idling engine and automatic transmission whenever the transmission shift lever is in a drive position. Creep force occurs in the direction indicated by the automatic transmission shift lever position and provides enough force to cause motion of a vehicle loaded to its Gross Vehicle Weight Rating (GVWR) on a level, paved surface before the service brake pedal is completely released. Although not required by the Federal Motor Vehicle Safety Standards, creep force exists on virtually all vehicles powered by ICEs and equipped with automatic transmissions.

When the current wording of FMVSS No. 102 was adopted in 1968, vehicles were equipped mostly with ICEs and mechanical/hydraulic automatic transmissions, which have always provided creep force. Today, drivers can rely on creep force to avoid crashes that would result from shifting errors. When a driver places the automatic transmission shift lever in a drive position and reduces service brake pressure slowly by easing up on the service brake pedal, the vehicle begins to move slowly in the direction that has been selected by the transmission shift lever. This creep force in the correct direction cues the driver that when the accelerator is depressed, the vehicle will move in the anticipated direction.

It is important for creep force to initiate motion of the vehicle before the driver's foot leaves the service brake pedal and before the service brakes are completely disengaged. Then, if a shifting error has occurred, the driver's foot is still on the brake pedal and the error can be safely and quickly corrected. For example, if there is no creep force associated with an automatic transmission equipped vehicle and the driver thought he had selected Drive but instead had selected Reverse, when he removes his foot from the brake and depresses the accelerator, the vehicle would unexpectedly move rearward instead of forward. The unexpected movement of the vehicle rearward may cause the driver to further depress the accelerator. By the time the driver realizes his mistake and applies the brake again, the vehicle may have moved rearward a considerable distance and possibly struck a pedestrian or an object, causing injury and/or property damage.

From years of driving ICE-powered automatic transmission vehicles, drivers are familiar with cues in the direction of travel indicated by creep force. Since it is not inherent in hybrid vehicles, it is NHTSA's view that there is a safety need to at least design creep force into the vehicles when in Reverse. Toyota designed the Prius in such a way that allows the electric motor to provide creep force so that it would function like an ICE automatic transmission only vehicle. For vehicles like the Prius that provide creep force in Reverse when the engine is stopped, the changes proposed in FMVSS No. 102 would allow the engine to stop and restart automatically when the transmission shift lever is in Reverse as well as in forward gears. The opportunity for shifting errors is always present. Drivers experience creep force constantly as a cue, which assures them of what gear they are in. An engine that is stopping and restarting automatically may add to driver confusion, especially when there is an absence of creep force. This proposed amendment has the effect of assuring rearward creep force in all automatic transmission vehicles with engine stop/start systems, either by requiring that the engine remain running in Reverse for vehicles like the hybrid electric Insight/Civic or by virtue of the design of the electric propulsion system for vehicles like the Prius. When there is no creep force or when there is creep force in the forward direction, the driver will know the vehicle is in a forward drive gear, in Neutral, or Park.

In examining the propulsion systems of the Honda Insight and Civic hybrid electric vehicle with IST and the Toyota Prius with the THS, it was noted that the Honda Insight/Civic hybrid electric vehicle did not provide creep force in the forward direction, as there was no possibility of vehicle motion until the service brake pedal was fully released. The Honda system provides creep force in Reverse because IST does not function in Reverse and the engine remains running, allowing the engine/automatic transmission to provide creep force by means of the ICE and automatic transmission. For the Toyota Prius, the engine stops in either the forward or reverse gears, however, when the gasoline engine is off, creep force is provided by the electric motor.

C. The Level of Creep Force Specified

In order to investigate the level of creep force that drivers are used to, and the level of creep force to require of any vehicle that allows the engine to automatically start and stop in Reverse, NHTSA measured the creep force produced by thirteen vehicles, including passenger cars, multipurpose passenger vehicles, and light trucks, that were selected on the basis of their availability. Measurements were made with the vehicle engines running at idle and the vehicle automatic transmissions in Drive, the lowest ratio forward gear (Low) and Reverse.

A record of the vehicles tested and creep forces measured are in Table 1. The creep force must be high enough to be noticeable to the driver. A heavier vehicle requires greater creep force to produce an obvious cue to the driver. The force data in Table 1 represents the amount of creep force that each vehicle's propulsion system produced. The creep force of some of these vehicles may be in excess of what is necessary to be minimally noticeable to

the driver. Since the motion cue to the driver depends mainly on creep force and vehicle weight, NHTSA believes it is appropriate to examine the ratio of creep force (forward and reverse) to vehicle weight (in Table 1, curb weight was used) of the vehicles tested. The results ranged from a minimum value of 0.02 for test number one (rearward creep force) to a maximum value of 0.17 for test number eleven (forward creep force). Since the creep force was obvious to the driver for all of these vehicles, NHTSA selected the lowest creep force to vehicle curb weight ratio, which was .02. Later, for the purpose of consistency, we decided to convert the lowest creep force/curb weight ratio to its corresponding creep force/GVWR ratio, which is .015. For vehicles that allow the engine to stop and start automatically while the transmission shift lever is in Reverse, the reverse creep force designed into a vehicle's propulsion system must be, at minimum, 1.5 percent of the vehicle's Gross Vehicle Weight Rating (GVWR) when the vehicle's engine is stopped, the propulsion system is on, the accelerator is released, the vehicle is loaded to its GVWR and the vehicle is on a level, paved surface.

The agency invites input from industry and the public relative to what this minimum ratio of creep force to vehicle GVWR should be. The agency also requests comments on the test for creep force in S5 of the proposed regulatory text.

TABLE 1

Test No.	Date	Vehicle							Creep force (lbs.)		
		Vehicle type	Year	Make	Model	VIN	Engine size (L)	Curb weight (lbs)	Drive	Low	Rev.
1	10/19/01	Truck	2000	Chevrolet	1500 Pickup, Full size, 4X4, ½ ton.	1GCEK19T0YE******	5.3	[1] 4374	150	155	95
2	10/24/01	Passenger Car.	1992	Chevrolet	Camaro Sport Coupe, 2DR, Hatchback/ liftback.	1G1FP2385NL******	5.7	3103	400	400	270
3	10/31/01	MPV (Van-Wagon).	1998	Mazda	MPV, Wagon, (4X4), JEE, HYD/ Class D.	JM3LV5239W0******	3	4120	265	260	255
4	11/2/01	Passenger Car.	1997	Honda	Civic EX 2DR, Coupe/4A.	1HGEJ824XVL******	1.6	2518	265	255	200
5	11/3/01	Passenger Car.	1990	Toyota	Corolla, De-luxe, 4DR.	2T1AE94AXLC******	1.6	2394	270	270	225
6	11/4/01	Passenger Car.	1993	Saturn	SW2, 4DR, Wagon.	1G8ZK8579PZ******	1.9	2506	265	265	265
7	11/4/01	Passenger Car.	1998	Subaru	Forester, Wagon, L.	JF1SF6351WH******	2.5	2795	295	295	295
8	11/4/01	MPV	1999	Jeep	Grand Cher-okee, 4X4, Laredo, 4DR.	1J4GW58S6XC******	4	3932	350	350	240
9	11/4/01	MPV	1999	Jeep	Grand Cher-okee, 4X4, Laredo, 4DR.	1J4GW58S7XC******	4	3932	490	490	290
10	11/4/01	MPV	2000	Chevrolet	S10/Blazer, 4X4, ½ ton.	1GNDT13W7Y2******	4.3	5350	175	175	125
11	11/4/01	Truck	1996	Dodge	Dakota, Pick-up, Sport.	1B7GL26X5TS******	3.9	3124	520	520	285
12	11/4/01	Passenger Car.	1988	Ford	Mustang, GT, 2DR, Sedan, Hatchback.	1FABP42E5JF******	5	3173	200	200	155
13	11/6/01	Passenger Car.	2002	Toyota	Prius	JT2BK18U820******	1.5	2765	165	167	165

[1] (GVWR = 6400 lbs.).

D. The Safety Need for Fail-Safe Provisions for Automatic Engine Stopping and Restarting While the Transmission and/or Transmission Shift Lever Are in Gear

With any automatic system that is critical to the safe operation of a motor vehicle, there is concern about what happens during a failure mode. For systems that allow the engine to stop and restart while the transmission and/or transmission shift lever remain in a drive position, it is important that the automatic starting of the engine does not cause the vehicle to unexpectedly surge forward or rearward both during normal operation and during failure modes. It is also important that when the vehicle is stopped, the engine stops automatically, the driver releases the brake pedal and depresses the accelerator to move the vehicle, that the engine restarts and is prepared to move the vehicle in a reasonable amount of time.

From the driver's perspective, the Prius behaves like an ICE automatic transmission only vehicle. The potential for the automatic restarting of the engine to confuse the driver and cause unexpected surging of the vehicle due to driver shifting errors is not an issue with the THS on the Prius. The Prius is an electric vehicle with a gasoline engine that assists when the batteries need charging or when additional motive power is required during acceleration and the electric motor provides creep force in both the forward and rearward directions regardless of whether the gasoline engine is running.

The Honda Insight does not have creep force in Drive when the idle-stop system operates. Any slow, forward motion of the vehicle that occurs is developed by the idling engine and automatic transmission after it starts. This takes place after the driver has released the brake pedal. One of the sensors that the Honda system receives input from is the brake switch, which indicates whether the brake is depressed or released. If the brake switch should fail open and the brake is depressed without the idle-stop sensing it, the idle-stop would cease to function. If the failure took place while the idle-stop function was operating, the engine would start and run at idle speed. This would not be an unsafe condition because the driver's foot is on the brake. The running engine would initiate slow, forward motion of the vehicle but a small amount of additional force on the already depressed brake pedal would hold the vehicle stationary. If the brake switch failed closed while the idle-stop system was operating and then the brake was released, the system would not sense the brake release and the engine would not restart. If the failure occurred while the vehicle was being driven, it would fail to restart during the next cycle. This failure mode would be no different than any of the many other failures that could cause an ICE only motor vehicle to stall in traffic. Thus, the current designs of the Prius and Insight do not introduce any failure mode safety issues over those that presently exist in ICE automatic transmission only vehicles.

It is anticipated that idle-stop technology will eventually be applied to ICE only vehicles (non-hybrid electric). We expect that these new designs will be very similar to the system used on the Insight/Civic hybrid electric vehicle. Systems that may permit unexpected, sudden surging of the vehicle when the ICE automatically restarts would not meet the need for safety. Even when the vehicle is stopped and the accelerator is fully depressed during automatic engine starting, such systems should contain safeguards that prevent sudden, unexpected surging of the vehicle. NHTSA requests comments on specifying a maximum throttle position regardless of the driver's input, for example, when the vehicle is stopped and the engine is about to automatically restart, if the driver's throttle input is greater than one-fourth of the maximum throttle, the throttle would automatically be limited to one-fourth of the maximum throttle during automatic engine restart.

The issue of timely restarting during normal operation is again of no concern to vehicles like the Prius. The electric motor of the Prius produces creep force and is also available to drive the vehicle when the engine is not running or if it would be slow to start. On the Insight/Civic hybrid electric vehicle, when the brake is depressed, the gasoline engine will stop when the vehicle speed is below 5 miles per hour. While the vehicle is stopped and the brake is depressed, the transmission automatically shifts into Neutral. When the brake is released, brake fluid pressure is maintained, the engine starts in Neutral then automatically shifts to Drive, and the vehicle moves slowly forward. This sequence occurs very rapidly.

In normal situations, the propulsion system is available to move the vehicle by the time the driver's foot moves from the brake to the accelerator. As earlier discussed, in March of 1984, NHTSA terminated rulemaking on ZEMCO's crude but similar system. Among the numerous safety concerns which led the agency to terminate rulemaking was the ZEMCO system's excessive delay in engine restarting. It is important that the time required for the engine to restart not become excessive as the vehicle ages and the system wears for designs where the propulsion system is disabled while the vehicle is stopped and the propulsion system must be re-enabled before the vehicle can move.

NHTSA requests comments on requiring a control that would allow the operator to lock out or turn off the idle-stop system in the event that restarting time becomes excessive or a malfunction occurs. NHTSA seeks input on what would be a reasonable maximum allowable time for the propulsion system to be available to move the vehicle after the brake pedal is released.

VI. Leadtime

We propose that if made final, the changes apply to passenger cars, multipurpose passenger vehicles, trucks and buses manufactured on or after the first September 1st that occurs two or more years after the publication of the final rule. Public comment is sought on this proposed lead time. We believe that two years is sufficient lead time for industry since we do not believe that compliance with this proposed rule would involve any new technology, or performance specifications that manufacturers cannot meet with existing design, tooling, or manufacturing capabilities. We further believe that conducting the proposed test procedures would not involve any new technologies or procedures that manufacturers would find difficult to conduct. Since this rulemaking would not make any substantive changes in the scope of FMVSS No. 102, manufacturers of passenger cars, multipurpose passenger vehicles, trucks or buses that are available for sale at the time this notice of proposed rulemaking is issued would not need to make any changes in vehicle manufacturing processes or procedures to ensure that their vehicles meet the amended FMVSS No. 102.

VII. Regulatory Analyses and Notices

A. Executive Order 12866 and DOT Regulatory Policies and Procedures

Executive Order 12866, ''Regulatory Planning and Review'' (58 FR 51735, October 4, 1993), provides for making determinations whether a regulatory action is ''significant'' and therefore subject to Office of Management and Budget (OMB) review and to the requirements of the Executive Order. The Order defines a ''significant regulatory action'' as one that is likely to result in a rule that may:

(1) Have an annual effect on the economy of $100 million or more or adversely affect in a material way the economy, a sector of the economy, productivity, competition, jobs, the environment, public health or safety, or State, local, or Tribal governments or communities;

(2) Create a serious inconsistency or otherwise interfere with an action taken or planned by another agency;

(3) Materially alter the budgetary impact of entitlements, grants, user fees, or loan programs or the rights and obligations of recipients thereof; or

(4) Raise novel legal or policy issues arising out of legal mandates, the President's priorities, or the principles set forth in the Executive Order.

We have considered the impact of this rulemaking action under Executive Order 12866 and the Department of Transportation's regulatory policies and procedures. This rulemaking document was not reviewed by the Office of Management and Budget under E.O. 12866, ''Regulatory Planning and Review.'' The rulemaking action is also not considered to be significant under the Department's Regulatory Policies and Procedures (44 FR 11034; February 26, 1979).

The purpose of the proposed revision of FMVSS No. 102, *Transmission shift lever sequence, starter interlock, and transmission braking effect*, is to keep pace with existing technology, by permitting the propulsion system of a vehicle to stop and restart automatically while the automatic transmission shift lever is in any forward drive gear. We also propose to allow the propulsion system to stop and restart automatically when the automatic transmission shift lever is in Reverse, provided that the propulsion system exhibits, at least, a minimum creep force in Reverse when the vehicle is stopped, the accelerator released and the propulsion system is activated. These proposed requirements were developed with the agency working in concert with the motor vehicle industry while resolving interpretation issues associated with the present standard. Therefore, there are no new costs involved with the proposed revisions, and a regulatory evaluation has not been prepared.

B. Executive Order 13132 (Federalism)

Executive Order 13132 requires us to develop an accountable process to ensure ''meaningful and timely input by State and local officials in the development of regulatory policies that have federalism implications.'' ''Policies that have federalism implications'' is defined in the Executive Order to include regulations that have ''substantial direct effects on the States, on the relationship between the national government and the States, or on the distribution of power and responsibilities among the various levels of government.'' Under Executive Order 13132, we may not issue a regulation with Federalism implications, that imposes substantial direct compliance costs, and that is not required by statute, unless the Federal government provides the funds necessary to pay the direct compliance costs incurred by State and local governments, or unless we consult with State and local governments, or unless we consult with State and local officials early in the process of developing the proposed regulation. We also may not issue a regulation with Federalism implications and that preempts State law unless we consult with State and local officials early in the process of developing the proposed regulation.

This proposed rule would not have substantial direct effects on the States, on the relationship between the national government and the States, or on the distribution of power and responsibilities among the various levels of government, as specified in Executive Order 13132. The reason is that this proposed rule, if made final, would apply to motor vehicle manufacturers, and not to the States or local governments. Thus, the requirements of Section 6 of the Executive Order do not apply to this proposed rule.

C. Executive Order 13045 (Economically Significant Rules Disproportionately Affecting Children)

Executive Order 13045 (62 FR 19885, April 23, 1997) applies to any rule that: (1) Is determined to be ''economically significant'' as defined under E.O. 12866, and (2) concerns an environmental, health or safety risk that NHTSA has reason to believe may have a disproportionate effect on children. If the regulatory action meets both criteria, we must evaluate the environmental health or safety effects of the planned rule on children, and explain why the planned regulation is preferable to other potentially effective and reasonably feasible alternatives considered by us.

This proposed rule is not subject to the Executive Order because it is not economically significant as defined in E.O. 12866 and does not involve decisions based on environmental, health or safety risks that disproportionately affect children.

D. Executive Order 12778 (Civil Justice Reform)

Pursuant to Executive Order 12778, ''Civil Justice Reform,'' we have considered whether this proposed rule would have any retroactive effect. We conclude that it would not have such an effect. Under 49 U.S.C. 30103, whenever a Federal motor vehicle safety standard is in effect, a State may not adopt or maintain a safety standard applicable to the same aspect of performance which is not identical to the Federal standard, except to the extent that the state requirement imposes a higher level of performance and applies only to vehicles procured for the State's use. 49 U.S.C. 30161 sets forth a procedure for judicial review of final rules establishing, amending or revoking Federal motor vehicle safety standards. That section does not require submission of a petition for reconsideration or other administrative proceedings before parties may file suit in court.

E. Regulatory Flexibility Act

Pursuant to the Regulatory Flexibility Act (5 U.S.C. 601 *et seq.*, as amended by the Small Business Regulatory Enforcement Fairness Act (SBREFA) of 1996) whenever an agency is required to publish a notice of rulemaking for any proposed or final rule, it must prepare and make available for public comment a regulatory flexibility analysis that describes the effect of the rule on small entities (*i.e.*, small businesses, small organizations, and small governmental jurisdictions). However, no regulatory flexibility analysis is required if the head of an agency certifies the rule would not have a significant economic impact on a substantial number of small entities. SBREFA amended the Regulatory Flexibility Act to require Federal agencies to provide a statement of the factual basis for certifying that a rule would not have a significant economic impact on a substantial number of small entities.

The Head of the Agency has considered the effects of this rulemaking action under the Regulatory Flexibility Act (5 U.S.C. 601 *et seq.*) and certifies that this proposal would not have a significant economic impact on a substantial number of small entities. The statement of the factual basis for the certification is that since this rulemaking would not make any substantive changes in the scope of FMVSS No. 102, small manufacturers of passenger cars, multipurpose passenger vehicles, trucks or buses would not need to make any changes in vehicle manufacturing processes or procedures

to ensure that their vehicles meet an amended FMVSS No. 102. Accordingly, the agency believes that this proposal would not affect the costs of motor vehicle manufacturers considered to be small business entities.

F. National Environmental Policy Act

We have analyzed this proposal for the purposes of the National Environmental Policy Act and determined that it would not have any significant impact on the quality of the human environment.

G. Paperwork Reduction Act

NHTSA has determined that, if made final, this proposed rule would not impose any ''collection of information'' burdens on the public, within the meaning of the Paperwork Reduction Act of 1995 (PRA). This rulemaking action would not impose any filing or recordkeeping requirements on any manufacturer or any other party. For this reason, we discuss neither electronic filing and recordkeeping nor do we discuss a fully electronic reporting option by October 2003.

H. National Technology Transfer and Advancement Act

Section 12(d) of the National Technology Transfer and Advancement Act of 1995 (NTTAA), Public Law 104–113, section 12(d) (15 U.S.C. 272) directs us to use voluntary consensus standards in our regulatory activities unless doing so would be inconsistent with applicable law or otherwise impractical. Voluntary consensus standards are technical standards (*e.g.*, materials specifications, test methods, sampling procedures, and business practices) that are developed or adopted by voluntary consensus standards bodies, such as the Society of Automotive Engineers (SAE). The NTTAA directs us to provide Congress, through OMB, explanations when we decide not to use available and applicable voluntary consensus standards.

After conducting a search of available sources (including data from International Organization of Standards or other standards bodies), we have determined that there are not any available and applicable voluntary consensus standards that we can use in this notice of proposed rulemaking. We have searched the SAE's Recommended Practices for standards applicable to creep force. We have found no SAE Standard that provides guidance on creep force. We have therefore developed our own proposal.

I. Unfunded Mandates Reform Act of 1995

Section 202 of the Unfunded Mandates Reform Act of 1995 (UMRA) requires Federal agencies to prepare a written assessment of the costs, benefits and other effects of proposed or final rules that include a Federal mandate likely to result in the expenditure by State, local or tribal governments, in the aggregate, or by the private sector, of more than $100 million in any one year (adjusted for inflation with base year of 1995). Before promulgating a NHTSA rule for which a written statement is needed, section 205 of the UMRA generally requires us to identify and consider a reasonable number of regulatory alternatives and adopt the least costly, most cost-effective or least burdensome alternative that achieves the objectives of the rule. The provisions of section 205 do not apply when they are inconsistent with applicable law. Moreover, section 205 allows us to adopt an alternative other than the least costly, most cost-effective or least burdensome alternative if we publish with the final rule an explanation why that alternative was not adopted.

This proposal would not result in costs of $100 million or more to either State, local, or tribal governments, in the aggregate, or to the private sector. Thus, this proposal is not subject to the requirements of sections 202 and 205 of the UMRA.

J. Data Quality Guidelines

After reviewing the provisions of this NPRM pursuant to OMB's Guidelines for Ensuring and Maximizing the Quality, Objectivity, Utility, and Integrity of Information Disseminated by Federal Agencies (''Guidelines'') issued by the Office of Management and Budget (OMB) (67 FR 8452, Feb. 22, 2002) and issued by the Department of Transportation (DOT) in final form on October 1, 2002 (67 FR 61719), NHTSA has determined that if made final, nothing in this rule would result in ''information dissemination'' to the public, as that term is defined in the Guidelines.

If a determination were made that public distribution of data resulting from this rule constituted information dissemination and was, therefore, subject to the OMB/DOT Guidelines, then the agency would review the information prior to dissemination to ascertain its utility, objectivity, and integrity (collectively, ''quality''). Under the Guidelines, any ''affected person'' who believed that the information ultimately disseminated by NHTSA was of insufficient quality could file a complaint with the agency. The agency would review the disputed information, make an initial determination of whether it agreed with the complainant, and notify the complainant of its initial determination. Once notified of the initial determination, the affected person could file an appeal with the agency.

K. Plain Language

Executive Order 12866 requires each agency to write all rules in plain language. Application of the principles of plain language includes consideration of the following questions:

—Have we organized the material to suit the public's needs?
—Are the requirements in the rule clearly stated?
—Does the rule contain technical language or jargon that is not clear?
—Would a different format (grouping and order of sections, use of headings, paragraphing) make the rule easier to understand?
—Would more (but shorter) sections be better?
—Could we improve clarity by adding tables, lists, or diagrams?
—What else could we do to make this rulemaking easier to understand?

If you have any responses to these questions, please include them in your comments on this NPRM.

L. Regulation Identifier Number (RIN)

The Department of Transportation assigns a regulation identifier number (RIN) to each regulatory action listed in the Unified Agenda of Federal Regulations. The Regulatory Information Service Center publishes the Unified Agenda in April and October of each year. You may use the RIN contained in the heading at the beginning of this document to find this action in the Unified Agenda.

Comments

How Do I Prepare and Submit Comments?

Your comments must be written and in English. To ensure that your comments are correctly filed in the Docket, please include the docket number of this document in your comments.

Your comments must not be more than 15 pages long. (49 CFR 553.21). We established this limit to encourage you to write your primary comments in a concise fashion. However, you may attach necessary additional documents to your comments. There is no limit on the length of the attachments.

Please submit two copies of your comments, including the attachments,

to Docket Management at the address given above under **ADDRESSES**.

You may also submit your comments to the docket electronically by logging onto the Dockets Management System Web site at *http://dms.dot.gov.* Click on ''Help & Information'' or ''Help/Info'' to obtain instructions for filing the document electronically.

How Can I Be Sure That My Comments Were Received?

If you wish Docket Management to notify you upon its receipt of your comments, enclose a self-addressed, stamped postcard in the envelope containing your comments. Upon receiving your comments, Docket Management will return the postcard by mail.

How Do I Submit Confidential Business Information?

If you wish to submit any information under a claim of confidentiality, you should submit three copies of your complete submission, including the information you claim to be confidential business information, to the Chief Counsel, NHTSA, at the address given above under **FOR FURTHER INFORMATION CONTACT**. In addition, you should submit two copies, from which you have deleted the claimed confidential business information, to Docket Management at the address given above under **ADDRESSES**. When you send a comment containing information claimed to be confidential business information, you should include a cover letter setting forth the information specified in our confidential business information regulation. (49 CFR Part 512.)

Will the Agency Consider Late Comments?

We will consider all comments that Docket Management receives before the close of business on the comment closing date indicated above under **DATES**. To the extent possible, we will also consider comments that Docket Management receives after that date. If Docket Management receives a comment too late for us to consider it in developing a final rule (assuming that one is issued), we will consider that comment as an informal suggestion for future rulemaking action.

How Can I Read the Comments Submitted by Other People?

You may read the comments received by Docket Management at the address given above under **ADDRESSES**. The hours of the Docket are indicated above in the same location.

You may also see the comments on the Internet. To read the comments on the Internet, take the following steps:

1. Go to the Docket Management System (DMS) Web page of the Department of Transportation (*http://dms.dot.gov/*).

2. On that page, click on ''search.''

3. On the next page (*http://dms.dot.gov/search/*), type in the four-digit docket number shown at the beginning of this document. Example: If the docket number were ''NHTSA–1998–1234,'' you would type ''1234.'' After typing the docket number, click on ''search.''

4. On the next page, which contains docket summary information for the docket you selected, click on the desired comments. You may download the comments. Although the comments are imaged documents, instead of word processing documents, the ''pdf'' versions of the documents are word searchable.

Please note that even after the comment closing date, we will continue to file relevant information in the Docket as it becomes available. Further, some people may submit late comments. Accordingly, we recommend that you periodically check the Docket for new material.

How Does the Federal Privacy Act Apply to My Public Comments?

Anyone is able to search the electronic form of all comments received into any of our dockets by the name of the individual submitting the comment (or signing the comment, if submitted on behalf of an association, business, labor union, etc.). You may review DOT's complete Privacy Act Statement in the **Federal Register** published on April 11, 2000 (Volume 65, Number 70; pages 19477–78) or you may visit *http://dms.dot.gov.*

List of Subjects in 49 CFR Part 571

Imports, Motor vehicle safety, Motor vehicles, Rubber and rubber products, Tires.

In consideration of the foregoing, it is proposed that the Federal Motor Vehicle Safety Standards (49 CFR Part 571), be amended as set forth below.

PART 571—FEDERAL MOTOR VEHICLE SAFETY STANDARDS

1. The authority citation for part 571 would continue to read as follows:

Authority: 49 U.S.C. 322, 30111, 30115, 30117, and 30166; delegation of authority at 49 CFR 1.50.

2. Section 571.102 would be revised to read as follows:

§ 571.102 Standard No. 102; Transmission shift lever sequence, starter interlock, and transmission braking effect.

S1. *Purpose and scope.* This standard specifies the requirements for the transmission shift lever sequence, a starter interlock, and for a braking effect of automatic transmissions, to reduce the likelihood of shifting errors, starter engagement by the driver when the transmission is in any drive position, and to provide supplemental braking at speeds below 40 kilometers per hour (25 miles per hour).

S2. *Application.* This standard applies to passenger cars, multi-purpose passenger vehicles, trucks, and buses.

S3. *Definitions.*

Creep force means a motive force applied exclusively by the electric motor of a vehicle that is propelled by both an electrical motor and a combustion engine while the combustion engine is stopped, the accelerator is released, the transmission shift lever is in a drive gear, and the vehicle is turned on.

S4. *Requirements.*

S4.1 *Automatic transmissions.*

S4.1.1 *Location of transmission shift lever positions on passenger cars.* A neutral position shall be located between forward drive and reverse drive positions. If a steering-column-mounted transmission shift lever is used, movement from neutral position to forward drive position shall be clockwise. If the transmission shift lever sequence includes a park position, it shall be located at the end, adjacent to the reverse drive position.

S4.1.2 *Transmission braking effect.* In vehicles having more than one forward transmission gear ratio, one forward drive position shall provide a greater degree of engine braking than the highest speed transmission ratio at vehicle speeds below 40 kilometers per hour (25 miles per hour).

S4.1.3 *Starter interlock.* The engine starter shall be inoperative when the transmission shift lever is in a forward or reverse drive position, except that after the driver has activated the vehicle's propulsion system:

S4.1.3.1 The engine may stop and restart automatically when the transmission shift lever is in any forward drive gear; and

S4.1.3.2 The engine may stop and restart automatically when the transmission shift lever is in reverse gear if the vehicle's propulsion system, when tested under S5, provides a creep force that is measurable before the brake pedal is fully released and, when measured with the brake pedal fully released, has a ratio to the vehicle gross

vehicle weight rating of at least .015, with the engine stopped.

S4.1.3.3 If the transmission shift lever is in Park, automatically stopping or restarting the engine shall not take the transmission out of Park.

S4.1.4 *Identification of shift lever positions.*

S4.1.4.1 Except as specified in S4.1.4.3, if the transmission shift lever sequence includes a park position, identification of shift lever positions, including the positions in relation to each other and the position selected, shall be displayed in view of the driver whenever any of the following conditions exist:

(a) the ignition is in a position where the transmission can be shifted; or

(b) the transmission is not in park.

S4.1.4.2 Except as specified in S4.1.4.3, if the transmission shift lever sequence does not include a park position, identification of shift lever positions, including the positions in relation to each other and the position selected, shall be displayed in view of the driver whenever the ignition is in a position in which the engine is capable of operation.

S4.1.4.3 Such information need not be displayed when the ignition is in a position that is used only to start the vehicle.

S4.1.4.4 All of the information required to be displayed by S4.1.4.1 or S4.1.4.2 shall be displayed in view of the driver in a single location. At the option of the manufacturer, redundant displays providing some or all of the information may be provided.

S4.2 *Manual transmissions.* Identification of the shift lever pattern of manual transmissions, except three forward speed manual transmissions having the standard ''H'' pattern, shall be displayed in view of the driver at all times when a driver is present in the driver's seating position.

S5. *Test Conditions and Procedures.* A vehicle with an automatic transmission that operates according to S4.1.3.2 shall be tested under the following conditions and procedures.

S5.1 *Test for Creep Force.*

S5.1.1 The ambient temperature of the test environment must be between 0 and 40 degrees Celsius (32 to 104 degrees Fahrenheit).

S5.1.2 All parameters and adjustments of the vehicle are set to factory specifications as delivered to the customer. This includes such parameters as brake adjustments, engine adjustments, and wheel bearing lubrication. Initial tire inflation pressures shall be in accordance with 49 CFR section 571.110, S4.3(c) for maximum loaded vehicle weight. The initial battery charge shall be in accordance with manufacturer's specifications, or if the manufacturer has no specifications, at a state of charge of not less than 95 percent.

S5.1.3 All accessory systems, except those that prevent creep force from being measured with the engine stopped, shall be turned on to their maximum setting.

S5.1.4 Load the vehicle under test to its gross vehicle weight rating in such a way as not to exceed any axle's gross axle weight rating when measured at the tire-ground interface and place it on a level paved surface.

S5.1.5 Attach one end of a tether such as a chain or cable to the front of the vehicle chassis at a point on the vehicle's longitudinal centerline and attach the other end to a structure that will remain stationary during the test. In series with the tether and between the vehicle and the stationary structure, place a force measurement device such as a load cell that will measure tension force at a minimum frequency of 10 HZ and to an accuracy within ± 2 percent of the actual reading in the range of 0 to 4450 N (0 to 1000 lb).

S5.1.5.1 The tether and the force measurement device must be in a horizontal orientation, parallel to the longitudinal axis of the vehicle during measurements.

S5.1.6 With the transmission shift lever in the Neutral or Park position and the parking brake applied, place the ignition switch to the Start position then release it to the Run position. Allow the vehicle to remain in this state for 15 minutes (whether the engine is running or not) before the measurements are recorded. Depress and hold the vehicle's service brake pedal to prevent vehicle motion, release the parking brake and place the transmission shift lever in the Reverse position.

S5.1.7 With the internal combustion engine stopped, slowly release the vehicle service brake pedal until the measurement device begins to register a force.

S5.1.8 Fully release the vehicle service brake pedal. Record the force indicated by the force measurement device.

Issued on: May 9, 2003.

Stephen R. Kratzke,

Associate Administrator for Rulemaking.

[FR Doc. 03–12051 Filed 5–14–03; 8:45 am]

BILLING CODE 4910–59–P

Notices

Federal Register

Vol. 68, No. 94

Thursday, May 15, 2003

This section of the FEDERAL REGISTER contains documents other than rules or proposed rules that are applicable to the public. Notices of hearings and investigations, committee meetings, agency decisions and rulings, delegations of authority, filing of petitions and applications and agency statements of organization and functions are examples of documents appearing in this section.

DEPARTMENT OF HEALTH AND HUMAN SERVICES

DEPARTMENT OF AGRICULTURE

Announcement of Establishment of the 2005 Dietary Guidelines Advisory Committee and Solicitation of Nominations for Membership

AGENCIES: U.S. Department of Health and Human Services, Office of Public Health and Science; and U.S. Department of Agriculture, Food, Nutrition and Consumer Services (FNCS) and Research, Education and Economics (REE).

ACTION: Notice.

SUMMARY: The Department of Health and Human Services (HHS) and the Department of Agriculture (USDA) announce the establishment of a Dietary Guidelines Advisory Committee and invite nominations for the Committee.

DATES: Nominations must be submitted by close of business on June 16, 2003.

ADDRESSES: Nominations may be submitted by electronic mail to *dietaryguidelines@osophs.dhhs.gov*. Alternatively, nominations may be sent to the following address: Kathryn McMurry, M.S., HHS Office of Disease Prevention and Health Promotion, Office of Public Health and Science, Room 738–G, 200 Independence Ave., SW., Washington, DC 20201, (202) 690–7102 (telephone), 202–205–0463 (fax).

FOR FURTHER INFORMATION CONTACT: HHS Co-Executive Secretaries: Kathryn McMurry or Karyl Thomas (phone 202–690–7102), HHS Office of Disease Prevention and Health Promotion, Office of Public Health and Science, Room 738–G, 200 Independence Ave., SW., Washington, DC 20201. USDA Co-Executive Secretaries: Carole Davis (phone 703–305–7600), USDA Center for Nutrition Policy and Promotion, 3101 Park Center Drive, Room 1034, Alexandria, Virginia 22302, or Pamela Pehrsson (phone 301–504–0716), USDA Agricultural Research Service, Beltsville Agricultural Research Center-West, Building 005, Room 309A, Beltsville, Maryland 20705. Additional information is available on the Internet at *http://www.health.gov/dietaryguidelines/*.

SUPPLEMENTARY INFORMATION:

Authority and Purpose: The Dietary Guidelines for Americans forms the basis of Federal food and nutrition education activities. Section 301 of the National Nutrition Monitoring and Related Research Act of 1990 (Pub. L. 101–445) requires the Secretaries of USDA and HHS to publish the Dietary Guidelines for Americans at least every five years. The Dietary Guidelines were first published by USDA and HHS in 1980, with revisions in 1985, 1990, 1995, and 2000. Beginning with the 1985 edition, HHS and USDA have appointed a Dietary Guidelines Advisory Committee of prominent experts in nutrition and health to assist in the preparation of the Dietary Guidelines.

Structure: The Committee will determine if revision of the 2000 edition of Nutrition and Your Health: Dietary Guidelines for Americans is warranted, based on thorough evaluation of recent scientific and applied literature and, if so, will proceed to develop recommendations for these revisions in a report to the Secretaries of Agriculture and Health and Human Services. The Committee will hold two-to three-day meetings, three to four times over the course of about a year. It is expected to begin meeting by Fall 2003 and prepare a report of its recommendations. Pursuant to the requirements of the Federal Advisory Committee Act, the meetings will be open to the public. Copies of the Report of the Dietary Guidelines Advisory Committee on the Dietary Guidelines for Americans, 2000 are available upon request from the HHS or USDA Co-Executive Secretaries listed above.

Prospective members of the Dietary Guidelines Advisory Committee should be knowledgeable of current scientific research in human nutrition and be respected and published experts in their fields. They should be familiar with the purpose, communication, and application of the Dietary Guidelines and have demonstrated interest in the public's health and well-being through their research and/or educational endeavors. Expertise is sought in specific specialty areas, including but not limited to, cardiovascular disease, cancer, pediatrics, gerontology, epidemiology, general medicine, overweight and obesity, physical activity, public health, nutrition biochemistry and physiology, nutrient bioavailability, nutrition education, and food safety and technology.

Nominations: The Departments will consider nominations for Committee membership of individuals qualified to carry out the above-mentioned tasks. A nomination should include, at a minimum, the following for each nominee: (1) A letter of nomination that clearly states the name and affiliation of the nominee, the basis for the nomination (*i.e.*, specific attributes which qualify the nominee for service in this capacity), and a statement that the nominee is willing to serve as a member of the Committee; (2) the nominator's name, address and daytime telephone number, and the address telephone number, and electronic mail address of the individual being nominated; and (3) a copy of the nominee's curriculum vitae.

Equal opportunity practices, in line with HHS and USDA policies, will be followed in all membership appointments to the Committee. To ensure that recommendations of the Committee take into account the needs of the diverse groups served by HHS and USDA, membership shall include, to the extent practicable, individuals with demonstrated ability to represent minorities, women, and persons with disabilities.

Dated: April 28, 2003.

Richard H. Carmona,

Surgeon General and Acting Assistant Secretary for Health, U.S. Department of Health and Human Services.

Dated: May 2, 2003.

Eric M. Bost,

Under Secretary, Food, Nutrition and Consumer Services, U.S. Department of Agriculture.

Dated: May 8, 2003.

Joseph Jen,

Under Secretary, Research, Education, and Economics, U.S. Department of Agriculture.

[FR Doc. 03–12136 Filed 5–14–03; 8:45 am]

BILLING CODE 4150–32–P

DEPARTMENT OF AGRICULTURE

Animal and Plant Health Inspection Service

[Docket No. 03–042–1]

Notice of Request for Extension of Approval of an Information Collection

AGENCY: Animal and Plant Health Inspection Service, USDA.

ACTION: Extension of approval of an information collection; comment request.

SUMMARY: In accordance with the Paperwork Reduction Act of 1995, this notice announces the Animal and Plant Health Inspection Service's intention to request an extension of approval of an information collection in support of regulations for the use of irradiation as a phytosanitary treatment for fruits and vegetables imported into the United States.

DATES: We will consider all comments that we receive on or before July 14, 2003.

ADDRESSES: You may submit comments by postal mail/commercial delivery or by e-mail. If you use postal mail/commercial delivery, please send four copies of your comment (an original and three copies) to: Docket No. 03–042–1, Regulatory Analysis and Development, PPD, APHIS, Station 3C71, 4700 River Road Unit 118, Riverdale, MD 20737–1238. Please state that your comment refers to Docket No. 03–042–1. If you use e-mail, address your comment to *regulations@aphis.usda.gov*. Your comment must be contained in the body of your message; do not send attached files. Please include your name and address in your message and ''Docket No. 03–042–1'' on the subject line.

You may read any comments that we receive on this docket in our reading room. The reading room is located in room 1141 of the USDA South Building, 14th Street and Independence Avenue SW., Washington, DC. Normal reading room hours are 8 a.m. to 4:30 p.m., Monday through Friday, except holidays. To be sure someone is there to help you, please call (202) 690–2817 before coming.

APHIS documents published in the **Federal Register**, and related information, including the names of organizations and individuals who have commented on APHIS dockets, are available on the Internet at *http://www.aphis.usda.gov/ppd/rad/webrepor.html.*

FOR FURTHER INFORMATION CONTACT: For information regarding regulations for the use of irradiation as a phytosanitary treatment for fruits and vegetables imported into the United States, contact Dr. Inder P. Gadh, Import Specialist, Phytosanitary Issues Management Team, PPQ, APHIS, 4700 Road Unit 140, Riverdale, MD 20737–1236; (301) 734–5210. For copies of more detailed information on the information collection, contact Mrs. Celeste Sickles, APHIS' Information Collection Coordinator, at (301) 734–7477.

SUPPLEMENTARY INFORMATION:

Title: Irradiation Phytosanitary Treatment for Fresh Fruits and Vegetables.

OMB Number: 0579–0155.

Type of Request: Extension of approval of an information collection.

Abstract: The Plant Protection Act (7 U.S.C. 7701–7772) authorizes the Secretary of Agriculture to regulate the importation of plants, plant products, and other articles into the United States to prevent the introduction of plant pests and noxious weeds.

The regulations in 7 CFR part 319 include specific requirements for the importation of fruits and vegetables. For example, fruits and vegetables from certain regions of the world must be treated for insect pests in order to be eligible for entry into the United States.

The regulations in 7 CFR part 305 provide for the use of irradiation as a phytosanitary treatment for certain fruits and vegetables imported into the United States. The irradiation treatment provides protection against 11 species of fruit flies and the mango seed weevil. It may be used as an alternative to other approved treatments for these pests in fruits and vegetables, such as fumigation, cold treatment, heat treatment, and other techniques.

This collection requires the submission of a compliance agreement, 24-hour notification, labeling requirements, dosimetry recordings, requests for dosimetry device approval, recordkeeping, requests for facility approval, trust fund agreement, and annual work plan.

We are asking the Office of Management and Budget (OMB) to approve our use of these information collection activities for an additional 3 years.

The purpose of this notice is to solicit comments from the public (as well as affected agencies) concerning our information collection. These comments will help us:

(1) Evaluate whether the proposed collection of information is necessary for the proper performance of the functions of the Agency, including whether the information will have practical utility;

(2) Evaluate the accuracy of our estimate of the burden of the proposed collection of information, including the validity of the methodology and assumptions used;

(3) Enhance the quality, utility, and clarity of the information to be collected; and

(4) Minimize the burden of the collection of information on those who are to respond, through use, as appropriate, of automated, electronic, mechanical, and other collection technologies; *e.g.*, permitting electronic submission of responses.

Estimate of burden: The public reporting burden for this collection of information is estimated to average 0.0825093 hours per response.

Respondents: Foreign plant protection services, irradiation facility personnel, importers.

Estimated annual number of respondents: 125.

Estimated annual number of responses per respondent: 999.16.

Estimated annual number of responses: 124,895.

Estimated total annual burden on respondents: 10,305 hours. (Due to averaging, the total annual burden hours may not equal the product of the annual number of responses multiplied by the reporting burden per response.)

All responses to this notice will be summarized and included in the request for OMB approval. All comments will also become a matter of public record.

Done in Washington, DC, this 12th day of May, 2003.

Peter Fernandez,

Acting Administrator, Animal and Plant Health Inspection Service.

[FR Doc. 03–12166 Filed 5–14–03; 8:45 am]

BILLING CODE 3410–34–P

DEPARTMENT OF AGRICULTURE

Forest Service

Alaska Region, (R–10), Chugach National Forest, Glacier and Seward Ranger Districts, Commercially Guided Helicopter Skiing

AGENCY: Forest Service, USDA.

ACTION: Notice of intent to prepare an environmental impact statement.

SUMMARY: The Chugach National Forest proposes to authorize a 5-year special use permit to Chugach Powder Guides, Inc. (CPG) for guided helicopter skiing on National Forest lands on the Kenai Peninsula near Girdwood and Seward, Alaska. Guided helicopter skiing would be permitted on 13 zones totaling 342,700 acres on the Glacier and Seward

Ranger Districts. The season of use would be from approximately December 15 through April 20. Three helicoptors would be used and 2,400 client days would be authorized.

DATES: Comments concerning the scope of the analysis must be received by June 6, 2003. The draft environmental impact statement is expected in July 2003 and the final environmental impact statement is expected in September 2003.

ADDRESSES: Send written comments to Teresa Paquet, Interdisciplinary Team Leader, Glacier Ranger District, P.O. Box 129, Girdwood, Alaska 99587–0129, or FAX comments to 907–783–2094, or send by e-mail to: *tpaquet@fs.fed.us.* For further information contact Teresa Paquet, Interdisciplinary Team Leader, Glacier Ranger District, P.O. Box 129, Girdwood, Alaska 99587–0129.

FOR FURTHER INFORMATION CONTACT: Teresa Paquet, Interdisciplinary Team Leader, Glacier Ranger District, P.O. Box 129, Girdwood, Alaska 99587–0129.

SUPPLEMENTARY INFORMATION:

Purpose and Need for Action

The Forest Service is responding to a request by a commercial guide service to provide helicopter skiing on the Kenai Peninsula. Chugach National Forest lands on the Kenai Peninsula provide many winter recreational opportunities including snowmobiling, cross-country skiing, ski touring, fixed-wing supported skiing, and helicopter supported skiing. Heli-skiing requires untracked powder snow, several vertical runs per day and a backcountry experience. Many areas on the Kenai have excellent physical characteristics (terrain and snow conditions) for helicopter skiing. There is not enough suitable terrain on private lands to meet this need. The proposed areas are near a major population center, Anchorage, which is needed to support such an operation. This proposal would help meet the public demand for quality, safe, guided helicopter skiing. Guided helicopter skiing would help meet the Chugach National Forest Revised Land and Resource Management Plan's goals to (1) maintain quality settings for motorized recreation opportunities and (2) provide helicopter access for skiing at appropriate locations.

CPG has submitted an application for a 5-year special use permit for outfitting/guiding helicopter skiing on National Forest lands on the Kenai Peninsula, near Girdwood and Seward Alaska. The applicant requested the use of 13 zones (342,700 acres) during the winter ski season (December 15, through April 20). Eight of these zones have been used by CPG under temporary permits and five are additional exploratory zones. The eight core zones are: Glacier-Winner, West Twentymile, North Twentymile, East Twentymile, Placer-Skookum, Grandview, and Bench Peak. The five exploratory zones are Seattle Creek, Moose Creek, Ptarmigan, Snow River and Mount Ascension. The project area is bordered on the west by the Hope Highway, Seward Highway, and the Forest boundary near Resurrection River, on the north by the Forest boundary, on the east by the divide between the Kenai Peninsula and Prince William Sound and non-National Forest land, and on the south by the Forest boundary and non-National Forest land.

Proposed Action

The Chugach National Forest proposes to authorize a 5-year special use permit to Chugach Powder Guides, Inc. (CPG) for guided helicopter skiing on National Forest lands on the Kenai Peninsula near Girdwood and Seward, Alaska. Guided helicopter skiing would be permitted on 13 use areas totaling 342,700 acres on the Glacier and Seward Ranger Districts. The season of use would be from approximately December 15 through April 20. Three helicopters would be used and 2,400 client days per season (1,800 core and 600 exploratory) would be authorized.

Possible Alternatives

Alternative 1. No Action.

Alternative 2. Submitted by proponent. 1,800 core clients days 600 exploratory client days. All use areas. All staging areas and 30 cycles (take off and landing) per staging area per day. Timing restrictions in Bench Creek West.

Alternative 3. Proponent's proposal with design features to address noise and user conflicts. 1,800 core and 600 exploratory client days. No use in Seattle Creek West, Moose Creek West and Ptarmigan West. No staging area in Moose Pass. 30 cycles per staging area per day. Timing restriction in Seattle Creek East and Bench Peak West.

Alternative 4. Designed to maintain current helicopter activity. No use in Seattle Creek, Ptarmigan, Moose Creek, Mount Ascension and Snow River. 1,200 client days. No staging areas in Moose Pass. 30 cycles per day per staging area. Timing restrictions in Bench Peak West.

Alternative 5. Designed to minimize user conflicts. 1,800 core and 600 exploratory client days. No use in Seattle Creek West, Seattle Creek East, Moose Creek West, Ptarmigan West, and Bench Peak West. No staging area in Moose Pass. 30 cycles per staging area per day.

Alternative 6. Designed to minimize noise and social impacts in Moose Pass. 1,800 core and 300 exploratory client days. No use in Moose Creek, Ptarmigan, Bench Peak West, Seattle Creek West, and Seattle Creek East. No staging area in Moose Pass. 30 cycles per staging area per day, except Girdwood Airstrip which would have 20 cycles per day.

Responsible Officials

Michael R. Kania, District Ranger, Seward Ranger District, 334 Fourth Ave., P.O. Box 390, Seward, Alaska 99664–0390; and James M. Fincher, District Ranger, Glacier Ranger District, Forest Station Road, PO Box 129, Girdwood, Alaska 99587–0129.

Nature of Decision To Be Made

The decision to be made from this analysis is whether or not to issue a 5-year permit to Chugach Powder Guides for helicopter skiing on the Glacier and Seward Ranger Districts, and if so, for what areas, for what period of time and with what restrictions.

Scoping Process

Public Involvement was initiated in September 2002 with the Chugach National Forest Schedule of Proposed Actions. On October 31, 2002, a letter describing the proposed action and seeking public comment was mailed to over 800 interested individuals, businesses and environmental groups. Public meetings, to share information and gather comments regarding the proposal, were held at Seward and Moose Pass on November 22, 2002, and at Hope and Girdwood on December 12, 2002. Additional public meetings, to share information and gather comments regarding draft Alternatives were held at Moose Pass on April 29, 2003, Seward on April 30, 2003, and at Hope and Girdwood on May 1, 2003.

Preliminary Issues

1. Wildlife. Helicopter operations and skiing activities can disturb wildlife. Factors include the distance to disturbance, sensitivity of individual species to noise and level of habituation. Excessive disturbance can cause harm to overall health, growth rates and reproductive success. Some of the species with the greatest potential to be impacted in the permit area are brown bear, wolverine, mountain goat, and Dall sheep.

2. Impacts on communities. Lifestyles of rural community residents can be negatively impacted by increases in permitted recreation activities either

incrementally over a number of years or by sudden increases in the number of helicopter trips. The noise of helicopters during flights could affect the quality of life for residents in the following areas: Girdwood, Sunrise, Moose Pass, and Seward.

3. Impacts to recreationists. Heli-skiing activities could negatively impact backcountry ground-based recreationists' experience by helicopter noise disturbance, increasing avalanche hazards and their sudden presence in areas that ground-based recreationists have expended effort to reach.

4. Wilderness recommendations. Permitted landings in roadless areas could affect future Wilderness recommendations.

5. Wildlife cumulative effects. Cumulative effects of various recreation activities (motorized and non-motorized) can have detrimental effects on wildlife use of habitat in alpine areas.

Permits or Licenses Required

USDA Forest Service Special Use Permit.

Comment Requested

This notice of intent continues the scoping process which guides the development of the environmental impact statement. Comments specific to the proposal and draft Alternatives are being sought.

Early Notice of Importance of Public Participation in Subsequent Environmental Review: A draft environmental impact statement will be prepared for comment. The comment period on the draft environmental impact statement will be 45 days from the date the Environmental Protection Agency publishes the notice of availability in the **Federal Register**.

The Forest Service believes, at this early stage, it is important to give reviewers notice of several court rulings related to public participation in the environmental review process. First, reviewers of draft environmental impact statements must structure their participation in the environmental review of the proposal so that it is meaningful and alerts an agency to the reviewer's position and contentions, (*Vermont Yankee Nuclear Power Corp.* v. *NRDC,* 435 U.S. 519, 553 (1978)). Also, environmental objections that could be raised at the draft environmental impact statement stage but that are not raised until after completion of the final environmental impact statement may be waived or dismissed by the courts, (*City of Angoon* v. *Hodel,* 803 F.2d 1016, 1022 (9th Cir. 1986) and *Wisconsin Heritages, Inc.* v. *Harris,* 490 F. Supp. 1334, 1338 (E.D. Wis. 1980)). Because of these court rulings, it is very important that those interested in this proposed action participate by the close of the June 6, 2003, comment period so that substantive comments and objections are made available to the Forest Service at a time when it can meaningfully consider them and respond to them in the final environmental impact statement.

To assist the Forest Service in identifying and considering issues and concerns on the proposed action, comments on the draft environmental impact statement should be as specific as possible. It is also helpful if comments refer to specific pages or chapters of the draft statement. Comments may also address the adequacy of the draft environmental impact statement or the merits of the alternatives formulated and discussed in the statement. Reviewers may wish to refer to the Council on Environmental Quality Regulations for implementing the procedural provisions of the National Environmental Policy Act at 40 CFR 1503.3 in addressing these points.

Comments received, including the names and addresses of those who comment, will be considered part of the public record on this proposal and will be available for public inspection.

(Authority: 40 CFR 1501.7 and 1508.22; Forest Service Handbook 1909.15, Section 21)

Dated: May 5, 2003.

Gerald F. Xavier,

Acting Forest Supervisor.

[FR Doc. 03–11871 Filed 5–14–03; 8:45 am]

BILLING CODE 3410–11–P

DEPARTMENT OF AGRICULTURE

Forest Service

Idaho Panhandle National Forest, Idaho—Quartz Gold Project EIS

AGENCY: Forest Service, USDA.

ACTION: Notice of intent to prepare an environmental impact statement.

SUMMARY: The Forest Service will prepare an environmental impact statement on a proposal of ecosystem management in the Quartz Gold project area, which is approximately 44,000 acres in size. Opportunities were developed through a comparison of existing project area conditions with desired future conditions for all the resources in the project area. The assessment utilized the Idaho Panhandle Forest Plan and findings from the St. Joe Geographic Assessment, Upper Columbia River Basin Assessment along with trends observed by interdisciplinary specialists conducting on the ground assessments. The proposal improves forest health, wildlife and fisheries habitat, and watershed health. It reduces risks to wildfire, and maintains a spectrum of access for public recreation. The project is intended to move the landscape toward long-term ecologic, economic and social sustainability.

DATES: Comments concerning the scope of the analysis must be received within 30 days of publication of this notice in the **Federal Register.** The draft environmental impact statement is expected to be available for public review in July 2003 and the final environmental impact statement is expected November 2003.

ADDRESSES: Send written comments to George Bain, District Ranger, St. Joe Ranger District, PO Box 407, St. Maries, Idaho 83861 or electronically to *gbain@fs.fed.us.* For further information, mail correspondence to Kimberly Johnson, EIS Team Leader at the address listed above. Information on this project can be found on the Internet by going to *http://www.fs.fed.us/ipnf/* and looking under Ecosystems, Management, Index of NEPA Project and St. Joe Ranger District.

FOR FURTHER INFORMATION CONTACT: Kimberly Johnson, Quartz Gold Project Team Leader, 208–245–6072.

SUPPLEMENTARY INFORMATION:

Purpose and Need for Action

The purpose of this proposal is to improve forest health by managing vegetative conditions that in the long term encourage more resilient and sustainable forest conditions. It also improves and maintains winter range conditions and white bark pine habitat, which are both declining. It will reduce the risk of resource loss through fuel management and improve growing conditions for sapling/pole stands. The proposal will contribute to watershed recovery processes by correcting sediment sources from the existing road system. Approximately 65% of stream-crossing culverts surveyed are undersized for a 100 year event (as required by Infish). It will also improve instream habitat conditions as several streams in the area are not meeting Infish standards as directed in the Forest Plan and provide fish passage on those road/stream crossing culverts. It will increase wildlife security which is currently below Forest Plan standards and maintain a spectrum of access for public recreation and provide opportunities for disabled hunters,

which currently, one exists on the District.

Proposed Action

The proposed action to meet the purpose and need of the project area is: commercially harvest approximately 5,300 acres of which 4,000 acres is intermediate harvest, 1,100 acres are sanitation salvage and approximately 200 acres of regeneration harvest (clearcut with reserve). The commercial harvest would include approximately 9 miles of road construction and reconstruction on existing roads. The proposal also includes the use of prescribe burning on approximately 466 acres on big game winter range, building approximately 3 miles of fuel breaks on the Idaho/Montana border, conducting pre-commercial stand improvement on approximately 2,000 acres, enhancement of whitebark pine habitat on 1,434 acres, by thinning around the remaining trees, and decommissioning approximately 160 miles of road and putting approximately 68 miles of road into storage. The proposal also adds access for disabled hunters, provides loops for ATV enthusiasts, increases wildlife security through effective road closures and improves instream fisheries habitat by placing structures in several streams in the area.

Responsible Official

Ranotta McNair, Forest Supervisor, Idaho Panhandle National Forest, 3815 Schreiber Way, Coeur D'Alene, Idaho 83815.

Nature of Decision To Be Made

The St. Joe Ranger District will prepare the EIS. The Forest Supervisor of the Idaho Panhandle National Forest will decide whether to implement this project, and if so, in what manner. The decision will be documented in a Record of Decision (ROD).

Scoping Process

Public Scoping packages describing the proposed action were sent out to the Quartz Gold Project mailing list in January 2003. An open house was held in February of 2003. A field trip to the project area is planned for May or June of 2003.

Preliminary Issues

Preliminary issues from scoping have been identified. These include effects of the proposed vegetation management and roads on water yield and sediment delivery to streams, the effects of management activities on riparian habitat conservation areas, the effects of proposed access management on the full spectrum of recreation use of roads and trial in the project area, and economic cost efficiency of proposed commercial harvest and road construction and decommissioning.

Comment Requested

This notice of intent initiates the scoping process which guides the development of the environmental impact statement. To assist the Forest Service in identifying and considering issues and concerns on the proposed action, comments should be as specific as possible. Public participation in this analysis is welcome at any time, however; comments received within 30 days of publication of this notice will be especially useful in the preparation of the Draft EIS.

Early Notice of Importance of Public Participation in Subsequent Environmental Review: A draft environmental impact statement will be prepared for comment. The comment period on the draft environmental impact statement will be 45 days from the date the Environmental Protection Agency publishes the Notice of Availability in the **Federal Register**.

The Forest Service believes, at this early stage, it is important to give reviewers notice of several court rulings related to public participation in the environmental review process. First, reviewers of draft environmental impact statements must structure their participation in the environmental review of the proposal so that it is meaningful and alerts an agency to the reviewer's position and contentions. Vermont Yankee Nuclear *Power Corp.* v. *NRDC*, 435 U.S. 519, 553 (1978). Also, environmental objections that could be raised at the draft environmental impact statement stage but that are not raised until after completion of the final environmental impact statement may be waived or dismissed by the courts. *City of Angoon* v. *Hodel,* 803 F.2d 1016, 1022 (9th Cir. 1986) and Wisconsin *Heritages*, Inc. v. *Harris*, 490 F. Supp. 1334;, 1338 (E.D. Wis. 1980). Because of these court rulings, it is very important that those interested in this proposed action participate by the close of the 45 day comment period so that substantive comments and objections are made available to the Forest Service at a time when it can meaningfully consider them and respond to them in the final environmental impact statement.

To assist the Forest Service in identifying and considering issues and concerns on the proposed action, comments on the draft environmental impact statement should be as specific as possible. It is also helpful if comments refer to specific pages or chapters of the draft statement. Comments may also address the adequacy of the draft environmental impact statement or the merits of the alternatives formulated and discussed in the statement. Reviewers may wish to refer to the Council on Environmental Quality Regulations for implementing the procedural provisions of the National Environmental Policy Act at 40 CFR 1503.3 in addressing these points.

Comments received, including the names and addresses of those who comment, will be considered part of the public record on this proposal and will be available for public inspection.

(Authority: 40 CFR 1501. 7 and 1508.22; Forest Service Handbook 1909.15, Section 21)

Dated: May 9, 2003.

Ranotta K. McNair,

Forest Supervisor.

[FR Doc. 03–12104 Filed 5–14–03; 8:45 am]

BILLING CODE 3410–11–M

DEPARTMENT OF AGRICULTURE

Forest Service

Public Meetings of the Black Hills National Forest Advisory Board

AGENCY: Forest Service, USDA.

ACTION: Notice of meeting.

SUMMARY: The Black Hills National Forest Advisory Board (NFAB) will hold meetings to become informed about Black Hills Naitonal Forest issues and to reach consensus on those issues so as to make management recommendations to the forest supervisory. The meetings are open, and the public may attend any part of the meetings. The May 28 agenda includes a presentation on the Phase II Amendment to the Black Hills National Forest 1997 Land and Resource Management Plan.

DATES: The meetings will be held on the following dates:

Wednesday, May 28, 2003 from 1 to 6 p.m.
Friday, July 11, 2003 from 1 to 6 p.m.
Wednesday, August 20, 2003 from 1 to 6 p.m.
Wednesday, September 17, 2003 from 1 to 6 p.m.
Wednesday, October 15, 2003 from 1 to 6 p.m.
Wednesday, November 19, 2003 from 1 to 6 p.m.

ADDRESSES: The meetings will take place at the Alex Johnson Hotel located at 523 Sixth Street, Rapid City, SD.

FOR FURTHER INFORMATION CONTACT: Frank Carroll, Black Hills National Forest, 25041 North Highway 16, Custer, SD, 57730, (605) 673–9200.

Dated: May 6, 2003.

David M. Thom,

Acting Black Hills National Forest Supervisor.

[FR Doc. 03–12105 Filed 5–14–03; 8:45 am]

BILLING CODE 3410–11–M

DEPARTMENT OF AGRICULTURE

Forest Service

Ravalli County Resource Advisory Committee

AGENCY: Forest Service, USDA.

ACTION: Notice of meeting.

SUMMARY: The Ravalli County Resource Advisory Committee will be meeting to discuss projects for 2003 and monitoring of 2002 projects. Agenda topics will include project proposal submissions and a public forum (question and answer session). The meeting is being held pursuant to the authorities in the Federal Advisory Committee Act (Pub. L. 92–463) and under the Secure Rural Schools and Community Self-Determination Act of 2000 (Pub. L. 106–393). The meeting is open to the public.

DATES: The meeting will be held on May 27, 2003, 6:30 p.m.

ADDRESSES: The meeting will be held at the Ravalli County Administration Building, 215 S. 4th Street, Hamilton, Montana. Send written comments to Jeanne Higgins, District Ranger, Stevensville Ranger District, 88 Main Street, Stevensville, MT 59870, by facsimile (406) 777–7423, or electronically to *jmhiggins@fs.fed.us.*

FOR FURTHER INFORMATION CONTACT: Jeanne Higgins, Stevensville District Ranger and Designated Federal Officer, Phone: (406) 777–5461.

Dated: May 8, 2003.

David T. Bull,

Forest Supervisor.

[FR Doc. 03–12103 Filed 5–14–03; 8:45 am]

BILLING CODE 3410–11–M

DEPARTMENT OF AGRICULTURE

Forest Service

Tuolumne County Resource Advisory Committee

AGENCY: Forest Service, USDA.

ACTION: Notice of meeting.

SUMMARY: The Tuolumne County Resource Advisory Committee will meet on May 19, 2003 at the City of Sonora Fire Department, in Sonora, California. The purpose of the meeting is to review project proposal submittals, and determine presentation needs for the upcoming June and July meetings.

DATES: The meeting will be held May 19, 2003, from 12 p.m. to 3 p.m.

ADDRESSES: The meeting will be held at the City of Sonora Fire Department located at 201 South Shepherd Street, in Sonora, California (CA 95370).

FOR FURTHER INFORMATION CONTACT: Pat Kaunert, Committee Coordinator, USDA, Stanislaus National Forest, 19777 Greenley Road, Sonora, CA 95370 (209) 532–3671; e-mail *pkaunert@fs.fed.us*

SUPPLEMENTARY INFORMATION: Agenda items to be covered include: (1) Status of replacement member applicants; (2) Review project proposal submittals; (3) Determine which proposal proponents to invite to make an oral presentation at the June and July meetings. This meeting is open to the public.

Dated: May 7, 2003.

Tom Quinn,

Forest Supervisor.

[FR Doc. 03–12106 Filed 5–14–03; 8:45 am]

BILLING CODE 3410–ED–M

DEPARTMENT OF AGRICULTURE

Forest Service

Notice of Resource Advisory Committee Meeting

AGENCY: North Central Idaho Resource Advisory Committee, Kamiah, Idaho, USDA, Forest Service.

ACTION: Notice of meeting.

SUMMARY: Pursuant to the authorities in the Federal Advisory Committee Act (Pub. L. 92–463) and under the Secure Rural Schools and Community Self-Determination Act of 2000 (Pub. L. 106–393) the Nez Perce and Clearwater National Forests' North Central Idaho Resource Advisory Committee will meet Thursday, May 29, 2003 in Kooskia, Idaho for a business meeting. The meeting is open to the public.

SUPPLEMENTARY INFORMATION: The business meeting on May 29 begins at 10 a.m. (PST), at the IOOF Hall, Kooskia, Idaho. Agenda topics will include discussion of potential projects. A public forum will begin at 2:30 p.m. (PST).

FOR FURTHER INFORMATION CONTACT: Ihor Mereszczak, Staff Officer and Designated Federal Officer at (208) 935–2513.

Dated: May 6, 2003.

Ihor Mereszczak,

Acting Forest Supervisor.

[FR Doc. 03–12126 Filed 5–14–03; 8:45 am]

BILLING CODE 3410–11–M

DEPARTMENT OF AGRICULTURE

Natural Resources Conservation Service

Notice of Proposed Changes to Section IV of the Field Office Technical Guide (FOTG) of the Natural Resources Conservation Service in Indiana

AGENCY: Natural Resources Conservation Service (NRCS), USDA.

ACTION: Notice of availability of proposed changes in Section IV of the FOTG of the NRCS in Indiana for review and comment.

SUMMARY: It is the intention of NRCS in Indiana to issue two revised conservation practice standards in Section IV of the FOTG. The revised standards are: Dike (356) and Wildlife Watering Facility (648). These practices may be used in conservation systems that treat highly erodible land and/or wetlands.

DATES: Comments will be received for a 30-day period commencing with this date of publication.

ADDRESSES: Address all requests and comments to Jane E. Hardisty, State Conservationist, Natural Resources Conservation Service (NRCS), 6013 Lakeside Blvd., Indianapolis, Indiana 46278. Copies of this standard will be made available upon written request. You may submit your electronic requests and comments to *darrell.brown@in.usda.gov.*

FOR FURTHER INFORMATION CONTACT: Jane E. Hardisty, 317–290–3200.

SUPPLEMENTARY INFORMATION: Section 343 of the Federal Agriculture Improvement and Reform Act of 1996 states that after enactment of the law, revisions made to NRCS state technical guides used to carry out highly erodible land and wetland provisions of the law, shall be made available for public review and comment. For the next 30 days, the NRCS in Indiana will receive comments relative to the proposed changes. Following that period, a determination will be made by the NRCS in Indiana regarding disposition of those comments and a final determination of changes will be made.

Dated: April 21, 2003.

Jane E. Hardisty,

State Conservationist, Indianapolis, Indiana.

[FR Doc. 03–12065 Filed 5–14–03; 8:45 am]

BILLING CODE 3410–16–P

DEPARTMENT OF AGRICULTURE

Rural Utilities Service

Information Collection Activity; Comment Request

AGENCY: Rural Utilities Service, USDA.

ACTION: Notice and request for comments.

SUMMARY: In accordance with the Paperwork Reduction Act of 1995 (44 U.S.C. Chapter 35, as amended), the Rural Utilities Service (RUS) invites comments on this information collection for which RUS intends to request approval from the Office of Management and Budget (OMB).

DATES: Comments on this notice must be received by July 14, 2003.

FOR FURTHER INFORMATION CONTACT: F. Lamont Heppe, Jr., Director, Program Development and Regulatory Analysis, Rural Utilities Service, 1400 Independence Ave., SW., STOP 1522, Room 4036 South Building, Washington, DC 20250–1522. Telephone: (202) 720–9550. FAX: (202) 720–4120.

SUPPLEMENTARY INFORMATION: The Office of Management and Budget's (OMB) regulation (5 CFR part 1320) implementing provisions of the Paperwork Reduction Act of 1995 (Pub. L. 104–13) requires that interested members of the public and affected agencies have an opportunity to comment on information collection and recordkeeping activities (*see* 5 CFR 1320.8(d)). This notice identifies an information collection that RUS is submitting to OMB for extension.

Comments are invited on: (a) Whether the proposed collection of information is necessary for the proper performance of the functions of the Agency, including whether the information will have practical utility; (b) the accuracy of the Agency's estimate of the burden of the proposed collection of information including the validity of the methodology and assumptions used; (c) ways to enhance the quality, utility and clarity of the information to be collected; and (d) ways to minimize the burden of the collection of information on those who are to respond, including through the use of appropriate automated, electronic, mechanical, or other technological collection techniques or other forms of information technology. Comments may be sent to: F. Lamont Heppe, Jr., Director, Program Development and Regulatory Analysis, Rural Utilities Service, U.S. Department of Agriculture, STOP 1522, 1400 Independence Ave., SW., Washington, DC 20250–1522. FAX: (202) 720–4120.

Title: Distance Learning and Telemedicine Loan and Grant Program.

OMB Control Number: 0572–0096.

Type of Request: Extension of a currently approved information collection package.

Abstract: The Rural Utilities Service's (RUS) Distance Learning and Telemedicine (DLT) Loan and Grant program provides loans and grants for advanced telecommunications services to improve rural areas' access to educational and medical services. The various forms and narrative statements required are collected from the applicants (rural community facilities, such as schools, libraries, hospitals, and medical facilities, for example). The purpose of collecting the information is to determine such factors as eligibility of the applicant; the specific nature of the proposed project; the purposes for which loan and grant funds will be used; project financial and technical feasibility; and, compliance with applicable laws and regulations. In addition, for grants funded pursuant to the competitive evaluation process, information collected facilitates RUS' selection of those applications most consistent with DLT goals and objectives in accordance with the authorizing legislation and implementing regulation.

Estimate of Burden: Public reporting burden for this collection of information is estimated to average 2.47 hours per response.

Respondents: Business or other for-profit; not-for-profit institutions; and State, Local or Tribal Government.

Estimated Number of Respondents: 300.

Estimated Number of Responses per Respondent: 22.00.

Estimated Total Annual Burden on Respondents: 16,316 hours.

Copies of this information collection can be obtained from Michele Brooks, Program Development and Regulatory Analysis, at (202) 690–1078. FAX: (202) 720–4120.

All responses to this notice will be summarized and included in the request for OMB approval. All comments will also become a matter of public record.

Dated: May 9, 2003.

Curtis M. Anderson,

Acting Administrator, Rural Utilities Service.

[FR Doc. 03–12068 Filed 5–14–03; 8:45 am]

BILLING CODE 3410–15–P

DEPARTMENT OF AGRICULTURE

Rural Utilities Service

Information Collection Activity; Comment Request

AGENCY: Rural Utilities Service, USDA.

ACTION: Notice and request for comments.

SUMMARY: In accordance with the Paperwork Reduction Act of 1995 (44 U.S.C. Chapter 35, as amended), the Rural Utilities Service (RUS) invites comments on this information collection for which RUS intends to request approval from the Office of Management and Budget (OMB).

DATES: Comments on this notice must be received by July 14, 2003.

FOR FURTHER INFORMATION CONTACT: F. Lamont Heppe, Jr., Director, Program Development and Regulatory Analysis, Rural Utilities Service, 1400 Independence Ave., SW., STOP 1522, Room 4036 South Building, Washington, DC 20250–1522. Telephone: (202) 720–9550. FAX: (202) 720–4120.

SUPPLEMENTARY INFORMATION: The Office of Management and Budget's (OMB) regulation (5 CFR 1320) implementing provisions of the Paperwork Reduction Act of 1995 (Pub. L. 104–13) requires that interested members of the public and affected agencies have an opportunity to comment on information collection and recordkeeping activities (see 5 CFR 1320.8(d)). This notice identifies an information collection that RUS is submitting to OMB for extension.

Comments are invited on: (a) Whether the proposed collection of information is necessary for the proper performance of the functions of the Agency, including whether the information will have practical utility; (b) the accuracy of the Agency's estimate of the burden of the proposed collection of information including the validity of the methodology and assumptions used; (c) ways to enhance the quality, utility and clarity of the information to be collected; and (d) ways to minimize the burden of the collection of information on those who are to respond, including through the use of appropriate automated, electronic, mechanical, or other technological collection techniques or other forms of information technology. Comments may be sent to: F. Lamont Heppe, Jr., Director, Program Development and Regulatory Analysis, Rural Utilities Service, U.S. Department of Agriculture, STOP 1522, 1400 Independence Ave., SW., Washington, DC 20250–1522. FAX: (202) 720–4120.

Title: State Telecommunications Modernization Plan.

OMB Control Number: 0572–0104.

Type of Request: Extension of a currently approved information collection.

Abstract: This information collection requirement stems from passage of the Rural Electrification Loan Restructuring Act (RELRA, Pub. L. 103–129) on November 1, 1993, which amended the Rural Electrification Act of 1936, 7 U.S.C. 901 *et seq.* (the RE Act). RELRA requires that a State Telecommunications Modernization Plan (Modernization Plan), covering at a minimum the Rural Utilities Service (RUS) borrowers in the state, be established in a state or RUS cannot make hardship or concurrent cost-of-money and Rural Telephone Bank (RTB) loans for construction in that state. It is the policy of RUS that every State has a Modernization Plan which provides for the improvement of the State's telecommunications network. A proposed Modernization plan must be submitted to RUS for approval. RUS will approve a proposed Modernization Plan if it conforms to the provisions of 7 CFR part 1751, subpart B.

Estimate of Burden: Public reporting burden for this collection of information is estimated to average 350 hours per response.

Respondents: Business or other for-profit; not-for-profit organizations.

Estimated Number of Respondents: 1.

Estimated Number of Responses per Respondent: 1.

Estimated Total Annual Burden on Respondents: 350.

Copies of this information collection can be obtained from MaryPat Daskal, Program Development and Regulatory Analysis, at (202) 720–7853, FAX: (202) 720–4120.

All responses to this notice will be summarized and included in the request for OMB approval. All comments will also become a matter of public record.

Dated: May 9, 2003.

Curtis M. Anderson,

Acting Administrator, Rural Utilities Service.

[FR Doc. 03–12069 Filed 5–14–03; 8:45 am]

BILLING CODE 3410–15–P

DEPARTMENT OF AGRICULTURE

Rural Utilities Service

Information Collection Activity; Comment Request

AGENCY: Rural Utilities Service, USDA.

ACTION: Notice and request for comments.

SUMMARY: In accordance with the Paperwork Reduction Act of 1995 (44 U.S.C. Chapter 35, as amended), the Rural Utilities Service (RUS) invites comments on this information collection for which RUS intends to request approval from the Office of Management and Budget (OMB).

DATES: Comments on this notice must be received July 14, 2003.

FOR FURTHER INFORMATION CONTACT: F. Lamont Heppe, Jr., Director, Program Development and Regulatory Analysis, Rural Utilities Service, 1400 Independence Ave., SW., STOP 1522, Room 4036 South Building, Washington, DC 20250–1522. Telephone: (202) 720–9550. FAX: (202) 720–4120.

SUPPLEMENTARY INFORMATION: The Office of Management and Budget's (OMB) regulation (5 CFR 1320) implementing provisions of the Paperwork Reduction Act of 1995 (Pub. L. 104–13) requires that interested members of the public and affected agencies have an opportunity to comment on information collection and recordkeeping activities (*see* 5 CFR 1320.8(d)). This notice identifies an information collection that RUS is submitting to OMB for extension.

Comments are invited on: (a) Whether the proposed collection of information is necessary for the proper performance of the functions of the Agency, including whether the information will have practical utility; (b) the accuracy of the Agency's estimate of the burden of the proposed collection of information including the validity of the methodology and assumptions used; (c) ways to enhance the quality, utility and clarity of the information to be collected; and (d) ways to minimize the burden of the collection of information on those who are to respond, including through the use of appropriate automated, electronic, mechanical, or other technological collection techniques or other forms of information technology. Comments may be sent to: F. Lamont Heppe, Jr., Director, Program Development and Regulatory Analysis, Rural Utilities Service, U.S. Department of Agriculture, STOP 1522, 1400 Independence Ave., SW., Washington, DC 20250–1522. FAX: (202) 720–4120.

Title: RUS Loan Prepayments and Related Reporting Burdens.

OMB Control Number: 0572–0088.

Type of Request: Extension of a currently approved information collection.

Abstract: 7 CFR Part 1786 establishes policies and procedures mandated by legislation. This part deals with the prepayment of certain loans held by the Federal Financing Bank (FFB), a wholly-owned government instrumentality under the supervision of the Secretary of the Treasury, and guaranteed by RUS.

This regulation sets forth policy and procedures implementing section 306(A) of the RE Act which permits an RUS-financed electric or telephone system to prepay an FFB loan (or any loan advance thereunder) by paying the outstanding principal balance due on the loan (or advance).

Estimate of Burden: Public reporting burden for this collection of information is estimated to average 2.21 hours per response.

Respondents: Not-for-profits organizations; business or, other for-profit.

Estimated Number of Respondents: 28.

Estimated Number of Responses per Respondent: 1.

Estimated Total Annual Burden on Respondents: 62 hours.

Copies of this information collection can be obtained from MaryPat Daskal, Program Development and Regulatory Analysis, at (202) 720–7853. FAX: (202) 720–4120.

All responses to this notice will be summarized and included in the request for OMB approval. All comments will also become a matter of public record.

Dated: May 9, 2003.

Curtis M. Anderson,

Acting Administrator, Rural Utilities Service.

[FR Doc. 03–12070 Filed 5–14–03; 8:45 am]

BILLING CODE 3410–15–P

COMMISSION ON CIVIL RIGHTS

Agenda and Notice of Public Meeting of the North Carolina State Advisory Committee

Notice is hereby given, pursuant to the provisions of the rules and regulations of the U.S. Commission on Civil Rights, that a conference call of the North Carolina Advisory Committee will convene at 2 p.m. and adjourn at 4 p.m. on Thursday, May 15, 2003. The purpose of the conference call is to finalize project proposal plans for North Carolina.

This conference call is available to the public through the following call-in number: 1–800–473–8693, access code: 17002060. Any interested member of the public may call this number and listen to the meeting. Callers can expect to incur charges for calls not initiated using the supplied call-in number or over wireless lines and the Commission will not refund any incurred charges. Callers will incur no charge for calls

using the call-in number over land-line connections. Persons with hearing impairments may also follow the proceedings by first calling the Federal Relay Service at 1–800–977–8339 and providing the Service with the conference call number and access code.

To ensure that the Commission secures an appropriate number of lines for the public, persons are asked to register by contacting Bobby Doctor, Director of the Southern Regional Office, 404–562–7000 (TDD 404–562–7004), by 4 p.m. on Wednesday, May 14, 2003.

The meeting will be conducted pursuant to the provisions of the rules and regulations of the Commission.

Dated at Washington, DC, May 7, 2003.

Ivy L. Davis,

Chief, Regional Programs Coordination Unit.

[FR Doc. 03–12134 Filed 5–12–03; 3:43 pm]

BILLING CODE 6335–01–P

COMMISSION ON CIVIL RIGHTS

Agenda and Notice of Public Meeting of the South Carolina State Advisory Committee

Notice is hereby given, pursuant to the provisions of the rules and regulations of the U.S. Commission on Civil Rights, that a conference call of the South Carolina Advisory Committee will convene at 2 p.m. and adjourn at 4 p.m. on Tuesday, May 20, 2003. The purpose of the conference call is to receive a briefing from key state officials on issues affecting South Carolina.

This conference call is available to the public through the following call-in number: 1–888–777–0937, access code: 17002109. Any interested member of the public may call this number and listen to the meeting. Callers can expect to incur charges for calls not initiated using the supplied call-in number or over wireless lines and the Commission will not refund any incurred charges. Callers will incur no charge for calls using the call-in number over land-line connections. Persons with hearing impairments may also follow the proceedings by first calling the Federal Relay Service at 1–800–977–8339 and providing the Service with the conference call number and access code.

To ensure that the Commission secures an appropriate number of lines for the public, persons are asked to register by contacting Bobby Doctor, Director of the Southern Regional Office, 404–562–7000 (TDD 404–562–7004), by 4 p.m. on Monday, May 19, 2003.

The meeting will be conducted pursuant to the provisions of the rules and regulations of the Commission.

Dated at Washington, DC, May 7, 2003.

Ivy L. Davis,

Chief, Regional Programs Coordination Unit.

[FR Doc. 03–12135 Filed 5–12–03; 3:43 pm]

BILLING CODE 6335–01–P

DEPARTMENT OF COMMERCE

International Trade Administration

Antidumping or Countervailing Duty Order, Finding, or Suspended Investigation; Amendment to Notice of Opportunity To Request Administrative Review

AGENCY: Import Administration, International Trade Administration, Department of Commerce.

ACTION: Amendment to notice of Opportunity to Request Administrative Review of Antidumping or Countervailing Duty Order, Finding, or Suspended Investigation.

SUMMARY: This is an amendment to the notice of ''Opportunity to Request Administrative Review of Antidumping or Countervailing Duty Order, Finding, or Suspended Investigation'' published on May 1, 2003 (68 FR 23281).

EFFECTIVE DATE: May 15, 2003.

FOR FURTHER INFORMATION CONTACT: Holly A. Kuga, Office of AD/CVD Enforcement, Import Administration, International Trade Administration, U.S. Department of Commerce, 14th Street and Constitution Avenue, NW., Washington, DC 20230, telephone: (202) 482–4737.

SUPPLEMENTARY INFORMATION: This notice is an amendment to the ''Opportunity to Request Administrative Review'' notice published on May 1, 2003 (68 FR 23281). As explained in the notice the Department published on May 6, 2003, *''Antidumping and Countervailing Duty Proceedings: Assessment of Antidumping Duties,''* 68 FR 23954, the Department has clarified its practice with respect to the collection of final antidumping duties on imports of merchandise where intermediate firms are involved. The public should be aware of this clarification in determining whether to request an adminstrative review of merchandise subject to antidumping findings and orders. See also the Import Administration Web site at *http://www.ia.ita.doc.gov.*

The clarification applies to all entries for which the anniversary month for requesting an administrative review of an antidumping duty order or finding is May 2003 or later, beginning with the orders cited in the opportunity notice for May 2003 anniversary cases which published on May 1, 2003 (68 FR 23281).

Further, the clarification addresses the assessment of duties on imports of merchandise from a market-economy country subject to an antidumping duty order. The clarification does not apply to imports of merchandise from non-market-economy (NME) countries which may be subject to an antidumping duty order. In addition, the clarification does not apply to imports of merchandise subject to a countervailing duty order because this issue does not arise in the subsidy enforcement context.

Dated: May 9, 2003.

Holly A. Kuga,

Acting Deputy Assistant Secretary, Group II for Import Administration.

[FR Doc. 03–12185 Filed 5–14–03; 8:45 am]

BILLING CODE 3510–DS–P

DEPARTMENT OF COMMERCE

International Trade Administration

[A-533–808]

Stainless Steel Wire Rods From India: Final Results and Partial Rescission of Antidumping Duty Administrative Review

AGENCY: Import Administration, International Trade Administration, U.S. Department of Commerce.

ACTION: Notice of final results and partial rescission of antidumping duty administrative review of stainless steel wire rods from India.

SUMMARY: On January 8, 2003, the Department of Commerce (''the Department'') published in the **Federal Register** the preliminary results of its administrative review of the antidumping duty order on stainless steel wire rods from India. *See Stainless Steel Wire Rods From India: Preliminary Results and Partial Rescission of Antidumping Duty Administrative Review*, 68 FR 1040 (January 8, 2003) (''*Preliminary Results*''). This review covers the Viraj Group Ltd., (''Viraj Group''), Panchmahal Steel Limited (''Panchmahal''), and Mukand Limited (''Mukand''), manufacturers and exporters of subject merchandise to the United States. Isibars Limited (''Isibars'') was originally a respondent in this review, but the Department rescinded the review of Isibars when petitioner, being the only party to request the review of Isibars, withdrew its request for review. *See Preliminary Results*. The

period of review is December 1, 2000 through November 30, 2001.

Based on our analysis of the comments received, we have made changes from the preliminary results of review. Therefore, the final results differ from the *Preliminary Results* of review with respect to the weighted-average dumping margin for the Viraj Group and Mukand. The final weighted-average dumping margin for the reviewed firms is listed below in the section entitled ''Final Results of the Review.''

EFFECTIVE DATE: May 15, 2003.

FOR FURTHER INFORMATION CONTACT: Stephen Bailey (Viraj Group, Isibars, and Panchmahal) and Jonathan Herzog (Mukand), Import Administration, International Trade Administration, U.S. Department of Commerce, 14th and Constitution Avenue, N.W., Washington, D.C. 20230; telephone: 202–482-1102, or 202–482-4271, respectively.

SUPPLEMENTARY INFORMATION:

Background

On January 8, 2003, the Department published in the **Federal Register** the preliminary results and partial rescission of its administrative review of the antidumping duty order on stainless steel wire rods from India. *See Preliminary Results*. We invited parties to comment on our preliminary results of review. We received case briefs from Panchmahal on February 14, 2003, referencing arguments made in its submissions to the Department dated January 6, 2003 and January 13, 2003. On February 11, 2003, Kurt Orban Partners LLC (''Kurt Orban''), an interested party, submitted a case brief. Pursuant to a request from the Department to redact new information, Kurt Orban resubmitted its case brief on March 13, 2003. We received Mukand's case briefs on January 13, 2003, and February 14, 2003. We received the Viraj Group's case brief on February 14, 2003. We received petitioner's case briefs addressing Mukand and the Viraj Group on February 14, 2003. On February 24, 2003, we received rebuttal briefs from the Viraj Group and from petitioner addressing the arguments presented by Panchmahal, Mukand, and the Viraj Group. Pursuant to 19 CFR 351.309(c)(ii), the Department directed the Viraj Group to resubmit their brief and omit certain arguments that were not raised in a timely manner. *See* the Department's letter dated March 26, 2003 rejecting the Viraj Group's case brief. The Viraj Group resubmitted their case brief on March 31, 2003. On April 15, 2003, Kurt Orban met with the Department to discuss Panchmahal's cost reconciliation. See the Department's memorandum to the file dated April 16, 2003. We have now completed the administrative review in accordance with section 751 of the Tariff Act of 1930, as amended (''the Act'').

Scope of Review

The merchandise under review is certain stainless steel wire rods (''SSWR''), which are hot-rolled or hot-rolled annealed and/or pickled rounds, squares, octagons, hexagons or other shapes, in coils. SSWR are made of alloy steels containing, by weight, 1.2 percent or less of carbon and 10.5 percent or more of chromium, with or without other elements. These products are only manufactured by hot-rolling and are normally sold in coiled form, and are of solid cross section. The majority of SSWR sold in the United States are round in cross-section shape, annealed and pickled. The most common size 5.5 millimeters in diameter.

The SSWR subject to this review are currently classifiable under subheadings 7221.00.0005, 7221.00.0015, 7221.00.0030, 7221.00.0045, and 7221.00.0075 of the *Harmonized Tariff Schedule of the United States* (HTSUS). Although the HTSUS subheadings are provided for convenience and customs purposes (as of March 1, 2003, renamed the U.S. Bureau of Customs and Border Protection), the written description of the merchandise under review is dispositive of whether or not the merchandise is covered by the review.

Rescission of Review

In our preliminary results, we stated we are rescinding the review with respect to Isibars because petitioner, the only party to request a review for Isibars, withdrew its request for review. *See Preliminary Results*. Consequently, in accordance with 19 CFR 351.213(d)(1) and consistent with the Department's practice, we preliminarily rescinded our review with respect to Isibars. Since we have received no new information since the preliminary results that contradicts the decision made in the preliminary results of review, we are rescinding the administrative review with respect to Isibars.

Facts Available

In the instant review, for the preliminary results, the Department applied adverse facts available in accordance with section 776(a) of the Act to Panchmahal because Panchmahal failed to provide or withheld information the Department requested. *See Preliminary Results*. The Department received inadequate responses to the questionnaire and multiple supplemental questionnaires from Panchmahal and could not verify the incomplete information that Panchmahal did provide, which is necessary for the margin analysis. *See Preliminary Results*. However, in the preliminary results, the Department inadvertently failed to corroborate the ''all others'' rate it applied to Panchmahal. We are correcting this oversight with the following.

Corroboration of the ''All Others'' Rate

Section 776(b) of the Act states that an adverse inference may include reliance on information derived from the petition. *See also* 19 CFR 351.308(c); Uruguay Round Agreement Act, Statement of Administrative Action (''SAA'') at 829–831. Section 776(c) of the Act provides that, when the Department relies on secondary information (such as the petition rates) as facts available, it must, to the extent practicable, corroborate that information from independent sources that are reasonably at its disposal. The SAA clarifies that ''corroborate'' means that the Department will satisfy itself that the secondary information to be used has probative value. See SAA at 870. To corroborate secondary information, the Department will, to the extent practicable, examine the reliability and relevance of the information used. *See Tapered Roller Bearings and Parts Thereof, Finished and Unfinished, from Japan, and Tapered Roller Bearings, Four Inches or Less in Outside Diameter, and Components Thereof, from Japan; Preliminary Results of Antidumping Duty Administrative Reviews and Partial Termination of Administrative Reviews*, 61 FR 57391, 57392 (November 6, 1996); *Notice of Preliminary Determination of Sales at Less Than Fair Value and Postponement of Final Determination: Barium Carbonate From the People's Republic of China*, 68 FR 12664 (March 17, 2003). The Department's regulations state that independent sources used to corroborate may include, but are not limited to, published price lists, official import statistics and customs data, and information obtained from interested parties during the particular review. *See* 19 CFR 351.308(d); SAA at 870. Further, in accordance with *F. LII De Cecco Di Filippo Fara S. Martino S.p.A. v. United States*, 216 F.3d 1027, 1034 (Fed. Cir. 2000), we examine whether information on the record supporting the selected adverse facts available is reasonable and has some basis in reality.

To assess the reliability of the petition margins for purposes of this review, in

accordance with section 776(c) of the Act, we examined the key elements of the calculations of export price and normal value upon which the petitioner based its margins for the petition, to the extent practicable. *See Certain Cut-to-Length Carbon Steel Plate from Mexico: Final Results of Antidumping Duty Administrative Review*, 64 FR 76, 84 (January 4, 1999) (''CTL Plate from Mexico'').

The ''all others'' rate from the investigation, which we are using in this review as adverse facts available, is the average of the rates applied to each original respondent in the investigation. In the investigation, the Department applied the highest rate obtained from the petition margins to each respondent based upon a determination by the Department to use the best information available. *See Final Determination of Sales at Less Than Fair Value: Certain Stainless Steel Wire Rods from India*, 58 FR 54110, 54111 (October 20, 1993). In this case, the U.S. prices in the petition were based on quotes to U.S. customers which were obtained through market research. *See* Petition for the Imposition of Antidumping Duties, December 29, 1993. We were able to corroborate the U.S. prices in the petition, which were used as the basis of the 48.80 percent rate, by comparing these prices to publicly available information based on IM-145 import statistics from the U.S. International Trade Commission's web-site for HTS numbers 7221.00.0005, 7221.00.0015, 7221.00.0030, 7221.00.0045, and 7221.00.0075. We noted that the average reported customs unit value for these products for the period of December 1, 2000 through November 30, 2001 was lower than all of the U.S. prices cited in the petition, which ranged from $1.92 per kilogram to $2.51 per kilogram (Quoted Price) or $1.73 per kilogram to $2.36 per kilogram (Adjusted Price), thus corroborating the petition's U.S. price.

The normal values used in the petition were based on actual price quotations obtained through market research. The Department examined the normal values from the petition and attempted to corroborate the normal values used in the petition, which were based on actual price quotations obtained through market research. For a complete discussion of the Department's corroboration analysis for normal value, *see Corroboration Memorandum for Panchmahal Steel Limited, for the final results of the 2000–2001 Administrative Review of Stainless Steel Wire Rods from India*, from Stephen Bailey to The File, dated May 8, 2003. The parties did not present information during the course of this administrative review and the Department is not aware of other independent sources of information that would enable it to further examine the NV calculations in the petition.

With respect to the relevance aspect of corroboration, however, the Department will consider information reasonably at its disposal as to whether there are circumstances that would render data used as facts available not relevant. Where circumstances indicate that the selected data are not appropriate as adverse facts available, the Department will disregard the data and use alternate data as facts available. *See Fresh Cut Flowers from Mexico: Preliminary Results and Termination in Part of Antidumping Duty Administrative Review*, 60 FR 49577, 49579 (September 26, 1995), (where the Department disregarded the highest dumping margin as best information available because the margin was based on another company's uncharacteristic business expense resulting in an unusually high margin).

Furthermore, in corroborating the petition rate, in this review, we found that certain individual transactions from a particular company had margins higher than the petition rate.

Thus, we find that the 48.80 percent rate that the Department is using for this review does have probative value. This rate is relevant for Panchmahal because we are not aware of any circumstances that would render this rate inappropriate and there is nothing on the record of the petition or this administrative review which calls into question the validity of this rate.

The implementing regulation for section 776 of the Act, codified at 19 CFR 351.308(d), states, ''(t)he fact that corroboration may not be practicable in a given circumstance will not prevent the Secretary from applying an adverse inference as appropriate and using the secondary information in question.'' Additionally, the SAA at 870 states specifically that, where ''corroboration may not be practicable in a given circumstance,'' the Department may nevertheless apply an adverse inference. The SAA at 869 emphasizes that the Department need not prove that the facts available are the best alternative information. Therefore, based on our efforts, described above, to corroborate information contained in the petition and in accordance with 776(c) of the Act, we consider the margins in the petition to be corroborated to the extent practicable for purposes of this final determination. *See CTL Plate from Mexico* (regarding the normal values contained in the petition, although the Department was provided no useful information by the parties and was unaware of other independent sources of information that would permit further corroboration of the margin calculation in the petition, the Department found that their efforts corroborated information contained in the petition to the extent practicable).

Analysis of Comments Received

All issues raised in the case and rebuttal briefs by parties to this administrative review are addressed in the ''Issues and Decision Memorandum'' (''*Decision Memorandum*'') from Barbara Tillman, Acting Deputy Assistant Secretary, Import Administration, to Joseph A. Spetrini, Acting Assistant Secretary for Import Administration, dated May 8, 2003, which is hereby adopted by this notice. A list of the issues which parties have raised and to which we have responded, all of which are in the *Decision Memorandum*, is attached to this notice as an Appendix. Parties can find a complete discussion of all issues raised in this review and the corresponding recommendations in the *Decision Memorandum*, which is on file in the Central Records Unit, Room B-099 of the main Department building. In addition, a complete version of the *Decision Memorandum* can be accessed directly on the Web at http://ia.ita.doc.gov/frn/index.html. The paper copy and electronic version of the *Decision Memorandum* are identical in content.

Sales Below Cost

We disregarded sales that failed the cost test for Mukand and the Viraj Group during the course of the review. We initiated a sales below the cost of production investigation with respect to Panchmahal. *See* the Department's June 11, 2002 letter to Panchmahal initiating sales below cost of production investigation; *Preliminary Results*. However, because Panchmahal was unable to provide the Department with a complete cost database, the Department could not conduct the dumping analysis, including the sales below cost investigation. For a complete discussion of Panchmahal's incomplete cost information see Comment 1 of the *Decision Memorandum*.

Changes Since the Preliminary Results

Based on our analysis of comments received, we have made changes in the margin calculations for the Viraj Group and Mukand. The changes to the margin calculations are listed below:

The Viraj Group

• The Department has revised the Viraj Group's total cost of manufacturing to reflect the actual direct material cost

incurred for purchasing billets. *See* Comment 12.

Mukand

• The Department reclassified some of Mukand's sales as agency sales. *See* Comment 2.
• The Department revised Mukand's interest expense ratio to exclude certain capitalized expenses related to the construction of a non-subject merchandise producing plant. *See* Comment 4.
• The Department revised Mukand's general and administrative expenses (''G&A'') ratio to exclude certain indirect selling expenses. As a result, the Department also recalculated Mukand's indirect selling expenses to account for the reclassification. *See* Comment 5.
• The Department revised Mukand's U.S. direct expenses to exclude certain taxes already reported as part of its direct material costs. *See* Comment 6.
• The Department revised Mukand's packing costs in order to account for an improper currency conversion in the preliminary margin calculation program. *See* Comment 8.

Final Results of Review

We determine that the following percentage margins exist for the period December 1, 2000, through November 30, 2001:

Producer/Manufacturer/Exporter	Weighted-Average Margin
The Viraj Group	3.25%
Mukand	26.38%
Panchamahl	48.80%

The Department shall determine, and U.S. Bureau of Customs and Border Protection (''BCBP'') shall assess, antidumping duties on all appropriate entries. In accordance with 19 CFR 351.212(b)(1), we have calculated exporter/importer (or customer)-specific assessment rates for merchandise subject to this review. The Department will issue appraisement instructions directly to the BCBP within 15 days of publication of these final results of review. We will direct the BCBP to assess the resulting assessment rates against the entered customs values for the subject merchandise on each of that importer's entries under the relevant order during the review period. For customer's duty-assessment purposes, we will calculate importer-specific assessment rates by dividing the dumping margins calculated for each importer by the total entered value of sales for each importer during the period of review.

Cash Deposit Requirements

The following deposit requirements will be effective upon publication of this notice of final results of administrative review for all shipments of stainless steel wire rods from India entered, or withdrawn from warehouse, for consumption on or after the date of publication, as provided by section 751(a)(1) of the Act: (1) The cash deposit rates for the Viraj Group, Mukand, and Panchmahal will be the rates shown above; (2) for previously reviewed or investigated companies not listed above, the cash deposit rate will continue to be the company-specific rate published for the most recent period; (3) if the exporter is not a firm covered in this review, a prior review, or the original less-than-fair-value (LTFV) investigation, but the manufacturer is, the cash deposit rate will be the rate established for the most recent period for the manufacturer of the merchandise; and (4) if neither the exporter nor the manufacturer is a firm covered in these or any previous reviews conducted by the Department, the cash deposit rate will be the ''all others'' rate, which is 48.80 percent.

These deposit requirements shall remain in effect until publication of the final results of the next administrative review.

Notification of Interested Parties

This notice also serves as a final reminder to importers of their responsibility under 19 CFR 351.402(f)(2) to file a certificate regarding the reimbursement of antidumping duties prior to liquidation of the relevant entries during this review period. Failure to comply with this requirement could result in the Secretary's presumption that reimbursement of the antidumping duties occurred and the subsequent assessment of double antidumping duties.

This notice also serves as a reminder to parties subject to administrative protective orders (''APOs'') of their responsibility concerning the return or destruction of proprietary information disclosed under APO in accordance with 19 CFR 351.305, which continues to govern business proprietary information in this segment of the proceeding. Timely written notification of the return/destruction of APO materials or conversion to judicial protective order is hereby requested. Failure to comply with the regulations and terms of an APO is a violation which is subject to sanction.

We are issuing and publishing this determination and notice in accordance with sections 751(a)(1) and 777(i)(1) of the Act.

Dated: May 8, 2003.

Joseph A. Spetrini,

Acting Assistant Secretary for Import Administration.

Appendix 1

Issues in the Decision Memorandum

A. Issues with regard to Panchmahal

Comment 1: Facts Available

B. Issues with regard to Mukand

Comment 2: Agency Sales
Comment 3: Use of Facts Available
Comment 4: Interest Expense
Comment 5: Sales Overhead Expense
Comment 6: Treatment of Unrefunded Taxes
Comment 7: Import Duties
Comment 8: Packing Costs

C. Issues with regard to the Viraj Group

Comment 9: The Viraj Group's Cost Data
Comment 10: Collapsing the Viraj Group
Comment 11: Financial Expenses of the Viraj Group
Comment 12: Raw Material Cost
Comment 13: Non-Dumped Sales
Comment 14: Ministerial Errors

[FR Doc. 03–12186 Filed 5–14–03; 8:45 am]

BILLING CODE 3510–DS–S

DEPARTMENT OF COMMERCE

National Oceanic and Atmospheric Administration

[I.D. 041703A]

Notice of Regional Fisheries Management Meetings

AGENCY: National Marine Fisheries Service (NMFS), National Oceanic and Atmospheric Administration (NOAA), Commerce.

ACTION: Notice of public meetings

SUMMARY: NMFS is scheduling a series of eight regional constituent meetings beginning in June and running through September to gather public input on ways to improve the effectiveness of NMFS and its management of living marine resources. The regional meetings will be a collaborative effort involving all major marine fisheries interests. The primary objective is to assemble and provide a comprehensive analysis of the diverse opinions, attitudes, and perspectives of marine resource stakeholders as they relate to broad themes in fisheries management. The secondary objective is to identify performance measures.

DATES: The meetings will be held in eight regional locations. See Meeting

Times, Dates, and Agenda for specific dates and times. To submit comments, see **FOR FURTHER INFORMATION CONTACT**.

ADDRESSES: For locations of the meetings see **SUPPLEMENTARY INFORMATION**. Information on the meetings will be updated periodically on NMFS' web page: *http://www.nmfs.noaa.gov/constituent/sessions/2003.html*.

FOR FURTHER INFORMATION CONTACT: Patricia Lawson, NMFS, telephone: 301–713–2239; fax: 301–713–1940; email: *patricia.lawson@noaa.gov*. To submit e-Comments (see E-Comments Pilot Program).

SUPPLEMENTARY INFORMATION:

Meeting Times, Dates, and Agenda

1. Western Pacific Meeting: June 10, 2003, 6 p.m. - 8 p.m. and June 11, 2003, 10 a.m. - 1 p.m. The meeting location is the Ala Moana Hotel, 410 Atkinson Drive Honolulu, HI 96814, telephone: 808–955–4911.

2. North Pacific Meeting: June 13, 2003, 2 p.m. - 5 p.m. and 6 p.m. - 8 p.m. The meeting location is the Kodiak Inn-Best Western, 236 Rezanof Drive West, Kodiak, AK 99615, telephone: 907–486–5712.

3. Caribbean Meeting: June 20, 2003, 9 a.m. - 12 p.m. and 6 p.m. - 8 p.m. The meeting location is the Wyndham Sugar Bay Resort and Spa, 6500 Estate Smith Bay, St. Thomas, USVI, telephone: 340–777–7100.

4. Gulf of Mexico Meeting: July 15, 2003, 2 p.m. - 5 p.m. and 6 p.m. - 8 p.m. The meeting location is The Naples Beach Hotel & Golf Club, 851 Gulf Shore Blvd. North, Naples, FL 34102, telephone: 800–237–7600.

5. Mid-Atlantic Meeting: August 5, 2003, 1 p.m.- 4 p.m. and 6 p.m. -8 p.m. The meeting location is the Wyndham Baltimore - Inner Harbor, 101 West Fayette Street, Baltimore, MD 21201, telephone: 410–752–1100.

6. Pacific Meeting: September 8, 2003, 6 p.m. - 8 p.m. and September 9, 2003, 8 a.m. - 11 p.m. The meeting location is the Double Tree Guest Suites Seattle Southcenter, 16500 Southcenter Parkway, Seattle, WA 98188, telephone: 206–575–8220.

7. New England Meeting: September 16, 2003, 2 p.m. - 5 p.m. and 6 p.m. - 8 p.m. The meeting location is the Holiday Inn Express, 110 Middle Street, Fairhaven, MA 02719, telephone: 508–997–1281.

8. South Atlantic Meeting: September 18, 2003, 1:30 p.m. - 4:30 p.m. and 6 p.m. - 8 p.m. The meeting location is the Pawley's Plantation, 70 Tanglewood Drive, Pawley's Island, SC 29585, telephone: 800–367–9959.

E-Comments Pilot Program

NMFS encourages the public to participate in submitting comments by the e-comment program. To this end, NMFS is accepting comments by submitted mail, fax, and the Internet as part of its e-Comments pilot project. The e-Comments pilot project is designed to introduce electronic commenting to its constituents. You can respond to the questions on the e-comment page through NMFS' web page *http://www.nmfs.noaa.gov/constituent/sessions/2003.html*. The public is encouraged to use the new web site to compose and submit comments on the regional constituent meetings. In submitting comments, please include your name, address and reason for each comment. NMFS also invites public comments on the e-Comments program that allows you to submit your comments on line. Please submit your comments by only one means. Comments received from the public will become part of the public record and will be posted on the e-Comments web site *http://www.nmfs.noaa.gov/emeetings.*

Areas NMFS is soliciting public comments on:

(1) Issue(s) - What are the key issue(s) facing fisheries management, nationally or regionally?

(2) Responsibility - Who should have management or conservation responsibility? (If commenting, indicate issue comment relates to.)

(3) Process - How could the Federal process of managing fisheries be improved?

(4) Performance Measure - How could one measure whether the solution is being properly implemented and working? (If commenting,indicate issue performance measure relates to.)

(5) Contact - Briefly describe the best way for NMFS to keep the public informed about changes within the agency and fisheries management.

Special Accommodations

These meetings are physically accessible to people with disabilities. Requests for sign language interpretation or other auxiliary aids should be directed to Patricia Lawson (see **FOR FURTHER INFORMATION CONTACT**) 2 weeks before each meeting.

Dated: May 12, 2003.

William T. Hogarth,

Assistant Administrator, National Marine Fisheries Service.

[FR Doc. 03–12159 Filed 5–14–03; 8:45 am]

BILLING CODE 3510–22–S

DEPARTMENT OF DEFENSE

Department of the Army

Western Hemisphere Institute for Security Cooperation Board of Visitors; Meeting

AGENCY: Department of the Army, DoD.

ACTION: Notice of open meeting.

SUMMARY: This notice sets forth the schedule and summary agenda for the meeting of the Board of Visitor (BoV) for the Western Hemisphere Institute for Security Cooperation (WHINSEC). Notice of this meeting is required under the Federal Advisory Committee Act (Pub. L. 92–463). This board was chartered on February 1, 2002, in compliance with the requirements set forth in 10 U.S.C. 2166.

Date: June 3–4, 2003.

Time: 3:30 p.m. to 5:30 p.m. (June 3, 2003). 8 a.m. to 2:30 p.m. (June 4, 2003).

Location: Pratt Hall, Building 35, 7011 Morrison Ave., Fort Benning, GA 31905.

Proposed Agenda: the WHINSEC BoV will elect BoV leadership for calendar year 2003, establish its 2003 schedule; validate and or establish sub-committees; receive status briefings of actions taken on last year's BoV recommendations and on new activities and efforts since December 2002. The Board will look into the areas deferred from the 2002 sessions: WHINSEC fiscal affairs and physical equipment. The Board will also look into any matters it deems important and will meet with groups of WHINSEC students.

FOR FURTHER INFORMATION CONTACT: Ken LaPlante, BCPI, Limited, Army G–3 (Room 2D337), 400 Army Pentagon, Washington, DC 20310, telephone (703) 692–7419 or Dr. Mary Grizzard at (703) 614–8414.

SUPPLEMENTARY INFORMATION: The meeting is open to the public. There will be time set aside for public comments by individuals and organization on June 4, 2003. Public comment and presentations will be limited to two minutes each and members of the public desiring to make oral statements or presentations must inform the contact personnel, in writing. Requests must be received before Wednesday, May 28, 2003. Mail written presentations and requests to register to attend the public sessions to: Dr. Mary Grizzard or Mr. LaPlante. Public seating is limited, and is available on a first come, first served basis.

Dated: May 5, 2003.

John C. Speedy III,

SES, Designated Federal Officer, WHINSEC BoV.

[FR Doc. 03–12154 Filed 5–14–03; 8:45 am]

BILLING CODE 3710–08–M

DEPARTMENT OF DEFENSE

Department of the Army; Corps of Engineers

Draft Environmental Impact Statement for the Proposed Royal D'Iberville Hotel and Casino Development, City of D'Iberville, Harrison County, MS

AGENCY: Department of the Army, U.S. Army Corps of Engineers, DoD.

ACTION: Notice of availability.

SUMMARY: This notice of availability announces the public release of the Draft Environmental Impact Statement (DEIS) for the Proposed Royal D'Iberville Hotel and Casino Development, City of D'Iberville, Harrison County, MS. On February 23, 1998, Royal D'Iberville, Inc. submitted a Joint Permit Application and Notification to the U.S. Army Corps of Engineers (Corps), Mobile District, the Mississippi Department of Environmental Quality, Office of Pollution Control and the Mississippi Department of Marine Resources for the D'Iberville project. The proposed action involves the construction of a dockside casino adjacent to the west side of the I–110 bridge over the Back Bay of Biloxi in D'Iberville, Harrison County, Mississippi. Based on a review of the level of impacts associated with the proposed action, the Mobile District published in **Federal Register**, November 21, 2001 (66 FR 58459), a notice of intent to prepare a DEIS for the proposed Royal D'Iberville Casino and Hotel, located in D'Iberville, Harrison County, MS. This DEIS has been developed by the Corps (lead agency) and 10 cooperating Federal and state agencies. The DEIS provides a comprehensive environmental analysis to aid in the decision-making process to deny or approve the Department of the Army permit for the proposed D'Iberville Hotel and Casino Project.

DATES: The public comment period for the DEIS will extend through June 30, 2003.

ADDRESSES: To receive a copy of the DEIS, or to submit comments, contact U.S. Army Corps of Engineers, Mobile District, Coastal Environment Team, Post Office Box 2288, Mobile, AL 36628–0001. A copy of the full document may also be viewed in the Gulfport Public Library, Gulfport, the Margaret Sherry Memorial Library in Biloxi, the D'Iberville Public Library in D'Iberville, or in the Mobile District.

FOR FURTHER INFORMATION CONTACT: Susan Ivester Rees, Ph.D., EIS Manager, (334) 694–4141, facsimile number (334) 690–2727 or e-mail address (*susan.i.rees@sam.usace.army.mil*).

SUPPLEMENTARY INFORMATION: Public comments can be submitted through a variety of methods. Written comments may be submitted to the Corps by mail, facsimile, or electronic methods, comments (written or oral) may be presented at a public meeting to be scheduled during the month of June in D'Iberville, MS. Additional information on these meetings will be mailed in a public notice to the agencies and public and announced in news releases.

Dated: May 5, 2003.

Ronald A. Krizman,

Chief, Regulatory Branch.

[FR Doc. 03–12156 Filed 5–14–03; 8:45 am]

BILLING CODE 3710–CR–M

DEPARTMENT OF DEFENSE

Department of the Army; Corps of Engineers

Intent to Prepare a Draft Environmental Impact Statement on the Proposed Section 227 National Shoreline Erosion Control Demonstration Project, 63rd Street, ''Hotspot'' Miami Beach, Dade County, FL

AGENCY: Department of the Army, Corps of Engineers, DOD.

ACTION: Notice of intent.

SUMMARY: The Jacksonville District, U.S. Army Corps of Engineers (Corps) intends to prepare a Technical Report and 100% Plans and Specifications with a Draft Environmental Impact Statement (DEIS) for the placement of an innovative breakwater design to help control erosion along the upcoming Test Fill at North Miami Beach using a domestic upland sand source. The proposed project is to be constructed from NE. 63rd Street to NE. 65th Street, Miami Beach, Dade County, FL. The Secretary of the Army is responsible for report approval. a collaborative effort between the Jacksonville District and Waterways Experiment Station, Vicksburg, MS.

FOR FURTHER INFORMATION CONTACT: Paul C. Stevenson, U.S. Army Corps of Engineers, Planning Division, Plan Formulation Branch, 701 San Marco Blvd, Jacksonville, FL, 32207, *paul.c.stevenson@usace.army.mil* by e-mail, or phone 904–232–3747.

SUPPLEMENTARY INFORMATION:

a. *Authorization.* Authority and funds for the project are provided by section 227, of the Water Resources Development Act (WRDA) of 1996, as amended. The proposed section 227, National Shoreline Erosion Control Demonstration Project, 63rd Street, ''Hotspot'', Miami Beach, Dade County, Florida, has awarded a contract to URS Group to complete 100% plans and specifications for an innovative breakwater to help control erosion along the Dade County Beach Erosion Control and Hurricane Protection (BEC&HP) Project in the same location. The BEC&HP for Dade County, Florida was authorized by the Flood Control Act of 1968 (with supplemental Appropriation Act of 1985 and WRDA 1986) to protect, reduce the loss of public beachfront and to prevent or reduce periodic damages and potential risk life, health and property in the developed lands adjacent to the beach.

b. *Study Area:* The project area begins at NE. 63rd Street and continues north to NE. 65th Street, Miami Beach, FL, an erosion hot spot.

c. *Project Scope:* The proposed project area is very specific to the erosion hot spot area of Miami Beach, between NE. 63rd Street and NE. 65th Street. The proposed project footprint will cover approximately 1,800 linear foot by 40-foot wide and 4.5 to 6-foot high, covered by at least one foot of water at Mean Low Water (MLW), 150-foot from the toe of fill.

d. *Preliminary Alternatives:* The DEIS will evaluate the No Action Plan and the nearshore Submerged Artificial Reef Training (SMART) structure. SMART is proposed approximately 150-foot from the toe of fill for the Test Beach Renourishment at Miami Beach, in the vicinity of 63rd Street, ''Hotspot'', Miami Beach, FL. The SMART design consists of groupings of reef modules in 200-foot by 40-foot segments, attached to an articulated armor concrete mat, parallel to the shoreline for a total length of 1,800-foot. The artificial reef modules would vary in size from 2,400 (4.5-foot high) pounds to 9,800 (6-foot high) pounds and be covered by a minimum of 1-foot of water at MLW. The reef modules would be anchored to the mats to prevent ''rolling''. Mat ends would be free of reefs modules to help prevent scouring. The SMART design breakwater is proposed to help control erosion along the renourished and provide environmental benefits (*see* ftp site *ftp://ftp.saj.usace.army.mil/pub/uploads/k3cdstjv/*

URSMiamiHotSpotSection227/ for the 30% submittal).

e. *Issues:* This DEIS will evaluate the potential impacts of the innovative submerged breakwater. The environmental analysis will incorporate the results of studies/surveys of environmental resources within the proposed project area and cumulative effects the proposed structure may produce.

f. *Scoping:* Scoping for the section 227 National Shoreline Erosion Control Development and Demonstration Project, 63rd Street, ''Hotspot'', Miami Beach, Date County, FL was initiated April 28, 2003, via letter. A scoping meeting and teleconference was held April 14, 2003, with interested resource agency participants. The proposed project area has been scoped for several previous Environmental Impact Statements (EIS) and Environmental Assessments in the past. We invite the participation of affected Federal, State and local agencies, affected Indian tribes, other interested private organizations and the public.

g. DEIS Preparation: The forecasted completion date for the EIS and National Environmental Policy Act work is February 4, 2004.

Dated: May 1, 2003.

George M. Strain,

Acting Chief, Planning Division.

[FR Doc. 03–12155 Filed 5–14–03; 8:45 am]

BILLING CODE 3710XM

DEPARTMENT OF ENERGY

[Docket No. EA–232–A]

Application to Export Electric Energy; OGE Energy Resources, Inc.

AGENCY: Office of Fossil Energy, DOE.

ACTION: Notice of application.

SUMMARY: OGE Energy Resources, Inc. (OERI) has applied for authority to transmit electric energy from the United States to Canada pursuant to section 202(e) of the Federal Power Act.

DATES: Comments, protests or requests to intervene must be submitted on or before June 16, 2003.

ADDRESSES: Comments, protests or requests to intervene should be addressed as follows: Office of Coal & Power Im/Ex (FE–27), Office of Fossil Energy, U.S. Department of Energy, 1000 Independence Avenue, SW., Washington, DC 20585–0350 (FAX (202) 287–5736).

FOR FURTHER INFORMATION CONTACT: Xavier Puslowski (Program Office) (202) 586–4708 or Michael Skinker (Program Attorney) (202) 586–2793.

SUPPLEMENTARY INFORMATION: Exports of electricity from the United States to a foreign country are regulated and require authorization under section 202(e) of the Federal Power Act (FPA) (16 U.S.C. 824a(e)).

On February 6, 2001, the Office of Fossil Energy (FE) of the Department of Energy (DOE) received an application from OERI to transmit electric energy from the United States to Canada. On April 16, 2001, OERI was issued an export authorization by DOE for a two year period. The authorization expired on April 16, 2003. On April 22, 2003, OERI applied to DOE for renewal of its application. OERI is an Oklahoma corporation created for the purposes of marketing electricity, natural gas and other energy commodities throughout North America. OERI will purchase the power to be exported from electric utilities and Federal power marketing agencies in the United States.

OERI proposes to arrange for the delivery of electric energy to Canada over the existing international transmission facilities owned by Basin Electric Power Cooperative, Bonneville Power Administration, Citizens Utilities Co., Eastern Maine Electric Cooperative, International Transmission Company, Joint Owners of the Highgate Project, Long Sault, Inc., Maine Electric Power Company, Maine Public Service Company, Minnesota Power and Light Inc., Minnkota Power Cooperative, New York Power Authority, Niagara Mohawk Power Corporation, Northern States Power, and Vermont Electric Transmission Company. The construction, operation, maintenance, and connection of each of the international transmission facilities to be utilized by OERI, as more fully described in the application, has previously been authorized by a Presidential permit issued pursuant to Executive Order 10485, as amended.

Procedural Matters: Any person desiring to become a party to this proceeding or to be heard by filing comments or protests to this application should file a petition to intervene, comment or protest at the address provided above in accordance with §§ 385.211 or 385.214 of the FERC's Rules of Practice and Procedures (18 CFR 385.211, 385.214). Fifteen copies of each petition and protest should be filed with the DOE on or before the date listed above.

Comments on the OERI application to export electric energy to Canada should be clearly marked with Docket EA–232–A. Additional copies are to be filed directly with Patricia Horn, Esq., General Counsel, Enogex Inc., Suite 600, 515 Central Park Drive, Oklahoma City, OK 73105 *and* Tyson L. Williams, Attorney, OEG Energy Resources, Inc. Suite 408 Oklahoma City, OK 73105.

A final decision will be made on this application after the environmental impacts have been evaluated pursuant to the National Environmental Policy Act of 1969, and a determination is made by the DOE that the proposed action will not adversely impact on the reliability of the U.S. electric power supply system.

Copies of this application will be made available, upon request, for public inspection and copying at the address provided above or by accessing the Fossil Energy Home page at *http://www.fe.doe.gov.* Upon reaching the Fossil Energy Home page, select ''Regulatory Programs,'' then ''Electricity Regulation,'' and then ''Pending Proceedings'' from the options menus.

Issued in Washington, DC, on May 8, 2003.

Anthony J. Como,

Deputy Director, Electric Power Regulation, Office of Coal & Power Im/Ex, Office of Coal & Power Systems, Office of Fossil Energy.

[FR Doc. 03–12162 Filed 5–14–03; 8:45 am]

BILLING CODE 6450–01–P

DEPARTMENT OF ENERGY

Controlled Hydrogen Fleet and Infrastructure Demonstration and Validation Project

AGENCY: U.S. Department of Energy (DOE).

ACTION: Issuance of solicitation for financial assistance applications, solicitation number DE–PS36–03GO93010.

SUMMARY: The Office of Hydrogen, Fuel Cell, and Infrastructure Technologies of the Department of Energy (DOE) Office of Energy Efficiency and Renewable Energy is soliciting financial assistance Applications with the objective of supporting industry efforts and the President's Hydrogen Fuel Initiative in developing a path to a hydrogen economy. DOE intends to provide financial support under provisions of the Hydrogen Future Act of 1996.

DATES: Issuance of the Solicitation is planned for May 5, 2003 with a closing date of August 15, 2003.

ADDRESSES: To obtain a copy of the Solicitation once it is issued, interested parties should access the DOE Industry Interactive Procurement System (IIPS) Web site. The Solicitation can be obtained directly through IIPS at *http://e-center.doe.gov* by browsing opportunities by Program Office, Financial Assistance, Golden Field

Office, and then selecting this Solicitation number. DOE will not issue paper copies of the Solicitation.

FOR FURTHER INFORMATION CONTACT: James Damm, Contracting Officer, via facsimile to (303) 275–4788 or electronically to *h2validation@go.doe.gov.* Once the Solicitation is issued, all questions must be submitted through IIPS per the instructions contained in the Solicitation. Responses to questions will be posted on the IIPS Web site. Further information on DOE's Hydrogen, Fuel Cells, and Infrastructure Technologies Program can be viewed at *http://www.eere.energy.gov/hydrogenandfuelcells.*

SUPPLEMENTARY INFORMATION: Under this Solicitation, DOE is soliciting Applications for Validation projects that include the testing, demonstration, and validation of hydrogen fuel cell vehicles and infrastructure, and the required vehicle and infrastructure interfaces for complete system solutions. The Validation projects should also include a comprehensive safety plan, a program that enhances the development of codes and standards, and a comprehensive, integrated education and training campaign.

Awards under this Solicitation will be Cooperative Agreements, with a five-year Project Period. Teams under this Solicitation must include an automobile manufacturer and an energy company, with one of the two entities proposed as the Applicant. DOE anticipates selecting three to five Applications for negotiation toward Award. Subject to the availability of annual congressional appropriations, the total cumulative DOE funding available under this Solicitation for all projects is anticipated to be between $150 million and $240 million. Applicant cost share is required in order to be considered for an Award under this Solicitation. The minimum required cost share varies with the type of Applicant and type of proposed project and will be specified in the Solicitation.

Issued in Golden, Colorado, on May 5, 2003.

Jerry L. Zimmer,

Director, Office of Acquisition and Financial Assistance.

[FR Doc. 03–12163 Filed 5–14–03; 8:45 am]

BILLING CODE 6450–01–P

DEPARTMENT OF ENERGY

Office of Fossil Energy

[FE Docket No. 03–15–NG, 03–14–NG, et al.]

H.Q. Energy Services (U.S.) Inc., PG&E Energy Trading-Gas Corporation, Cargill, Incorporated, Statoil Natural Gas LLC, Dartmouth Power Associates, Limited Partnership; Orders Granting Authority to Import and Export Natural Gas, Including Liquefied Natural Gas

AGENCY: Office of Fossil Energy, DOE.

ACTION: Notice of orders.

SUMMARY: The Office of Fossil Energy (FE) of the Department of Energy gives notice that during April 2003, it issued Orders granting authority to import and export natural gas, including liquefied natural gas. These Orders are summarized in the attached appendix and may be found on the FE Web site at *http://www.fe.doe.gov* (select gas regulation), or on the electronic bulletin board at (202) 586–7853. They are also available for inspection and copying in the Office of Natural Gas & Petroleum Import & Export Activities, Docket Room 3E–033, Forrestal Building, 1000 Independence Avenue, SW., Washington, DC 20585, (202) 586–9478. The Docket Room is open between the hours of 8 a.m. and 4:30 p.m., Monday through Friday, except Federal holidays.

Issued in Washington, DC on May 5th, 2003.

Clifford P. Tomaszewski,

Manager, Natural Gas Regulation, Office of Natural Gas & Petroleum Import & Export Activities, Office of Fossil Energy.

APPENDIX—ORDERS GRANTING IMPORT/EXPORT AUTHORIZATIONS

[DOE/FE Authority]

Order No.	Date issued	Importer/exporter FE Docket No.	Import volume	Export volume	Comments
1861	4–4–03	H.Q. Energy Services (U.S.) Inc., 03–15–NG.	200 Bcf	200 Bcf	Import and export natural gas from and to Canada and Mexico, beginning on May 1, 2003, and extending through April 30, 2005.
1862	4–4–03	PG&E Energy Trading-Gas Corporation, 03–14–NG.	100 Bcf	100 Bcf	Import and export natural gas from and to Canada, beginning on July 1, 2003, and extending through June 31, 2005.
1863	4–15–03	Cargill, Incorporation 03–17–NG.	1,500 Bcf	500 Bcf	Import up to a combined total of natural gas from Canada and Mexico, and to export up to a combined total of natural gas to Canada and Mexico, beginning on April 15, 2003, and extending through April 14, 2005.
1864	4–21–03	Statoil Natural Gas LLC, 03–16–LNG.	190 Bcf		Import liquefied natural gas from various international sources, beginning on June 1, 2003, and extending through May 31, 2005.
1865	4–28–03	Dartmouth Power Associates Limited Partnership 03–18–NG.	11.68 Bcf		Import natural gas from Canada, beginning on May 7, 2003, and extending through May 6, 2005.

[FR Doc. 03–12161 Filed 5–14–03; 8:45 am]
BILLING CODE 6450–01–P

DEPARTMENT OF ENERGY

National Nuclear Security Administration

Notice of Availability of the Draft Environmental Impact Statement for the Proposed Chemistry and Metallurgy Research Building Replacement Project at Los Alamos National Laboratory, Los Alamos, NM

AGENCY: U.S. Department of Energy, National Nuclear Security Administration.

ACTION: Notice of availability and public hearings.

SUMMARY: Pursuant to the National Environmental Policy Act (NEPA) of 1969, as amended (42 U.S.C. 4321 *et seq.*), and the DOE Regulations Implementing NEPA (10 CFR part 1021), the National Nuclear Security Administration (NNSA), an agency within the U.S. Department of Energy (DOE), announces the availability of the *Draft Environmental Impact Statement for the Chemistry and Metallurgy Research Building Replacement Project at Los Alamos National Laboratory, Los Alamos, New Mexico* (the Draft CMRR EIS), and the dates and locations for the public hearings to receive comments on the Draft CMRR EIS. The present Chemistry and Metallurgy Research (CMR) Building at Los Alamos National Laboratory (LANL) houses mission critical analytical chemistry, material characterization and actinide (actinides are any of a series of elements with atomic numbers ranging from actinium-89 through lawrencium-103) research and development capabilities. The Draft CMRR EIS considers the potential environmental impacts that could result due to the consolidation and relocation of these CMR capabilities from the existing aged CMR Building to a new facility such that these capabilities would be available on a long-term basis to successfully accomplish LANL mission support activities or programs. The Draft CMRR EIS also considers the no-action alternative of maintaining the CMR capabilities at the CMR Building.

DATES: The NNSA invites members of Congress, American Indian Tribal Governments, state and local governments, other Federal agencies, and the general public to provide comments on the Draft CMRR EIS. The comment period runs through June 30, 2003; the NNSA will consider all comments received or postmarked by that date. Comments postmarked after June 30, 2003, will be considered to the extent practicable. As part of the public comment period for the Draft CMRR EIS, pubic hearings will be held on June 3rd and 4th, 2003, to provide the public and stakeholders with an opportunity to present comments on the draft document, ask questions, and discuss concerns with DOE and NNSA officials regarding the Draft CMRR EIS. The dates, times, and locations for these public hearings are as follows:

June 3, 2003, 6:30 p.m.–9 p.m., Fuller Lodge, 2132 Central Avenue, Los Alamos, NM.

June 4, 2003, 6:30 p.m.–9 p.m., Cities of Gold Hotel, Highway 84/285, Pojoaque, NM.

ADDRESSES: A copy of the Draft CMRR EIS or its Summary may be obtained upon request by writing to: U.S. Department of Energy, National Nuclear Security Administration, Los Alamos Site Office, Attn: Ms. Elizabeth Withers, Office of Facility Operations, 528 35th Street, Los Alamos, New Mexico, 87544; by facsimile ((505) 667–9998); or by E-mail (CMRR *EIS@doeal.gov*). Please mark all envelopes, faxes and e-mail: ''Draft CMRR EIS Comments''. Copies of the Draft CMRR EIS are also available for review at: the Los Alamos Outreach Center, 1619 Central Avenue, Los Alamos, New Mexico, 87544; and the Zimmerman Library, University of New Mexico, Albuquerque, New Mexico 87131.

Specific information regarding the public hearings can also be obtained by the means described above. Comments concerning the Draft CMRR EIS can be submitted by the means described above or by leaving a message on the EIS Hotline at (toll free) 1–877–491–4957. The Hotline will have instructions on how to record comments.

FOR FURTHER INFORMATION CONTACT: For general information on NNSA NEPA process, please contact: Mr. James Mangeno (NA–3.6), NEPA Compliance Officer for the National Nuclear Security Administration, U.S. Department of Energy, 1000 Independence Avenue SW., Washington, DC 20585, (202) 586–8395. For general information about the DOE NEPA process, please contact: Ms. Carol Borgstrom, Director, Office of NEPA Policy and Compliance (EH–42), U.S. Department of Energy, 1000 Independence Avenue SW., Washington, DC 20585, (202) 586–4600, or leave a message at 1–800–472–2756.

SUPPLEMENTARY INFORMATION: Mission critical CMR capabilities at LANL support NNSA's stockpile stewardship and management strategic objectives. CMR's analytical chemistry, materials characterization, and actinide research and development capabilities are necessary to support the current and future directed stockpile work and campaign activities conducted at LANL. The CMR Building is over 50 years old and approaching end of life. Studies conducted in the late 1990s identified a seismic fault trace located beneath the CMR Building, which greatly increases the level of structural upgrades needed for the building to meet current structural seismic code requirements for a Hazard Category 2 nuclear facility. The CMR Building has been upgraded such that operations can continue, on a restricted basis, in support of national security missions. The CMR Upgrades project was designed to extend the life of the CMR Building through approximately 2010. It would be cost prohibitive to perform the needed repairs, upgrades, and systems retrofitting for long-term (beyond 2010), unrestricted use of the CMR Building.

NNSA cannot perform the assigned LANL mission critical CMR capabilities in the existing CMR Building at an acceptable level of risk to public and worker health and safety without operational restrictions. These operational restrictions preclude the full implementation of the level of operation DOE decided upon through its Record of Decision for the 1999 LANL Site-wide Environmental Impact Statement for the Continued Operation of Los Alamos National Laboratory (DOE/EIS–0238). CMR capabilities are necessary to support the current and directed stockpile work and campaign activities at LANL. By 2010, operations will have been conducted in the existing CMR Building for 60 years; this is the estimated operational life span for nuclear operations at the existing CMR Building. Given that the CMR Building is near the end of its useful life, action is now required by NNSA to assess alternatives for continuing these activities for the succeeding 50 years.

The CMRR EIS evaluates the environmental impacts associated with relocating the CMR capabilities at LANL to new buildings sited at the following alternative locations: (1) Next to the Plutonium Facility at Technical Area 55 (TA–55) at LANL (the Proposed Action), and (2) a ''greenfield'' site near TA–55 within TA–6. The NNSA also evaluated performing minimal necessary structural and systems upgrades and repairs to portions of the existing CMR Building and continuing the use of these upgraded portions of the structure for administrative offices and support function purposes, as well as evaluating the potential decontamination and

demolition of the entire existing CMR Building as disposition options coupled with the alternatives for construction and operation of new nuclear laboratory facilities at the two previously identified locations. The EIS considers the performance of minimal necessary structural and systems upgrades and repairs to the existing CMR Building as a no-action alternative with continued maintenance of limited mission critical CMR capabilities at the CMR Building. NNSA expects to complete the Final CMRR EIS by November 2003. A Record of Decision would be completed no sooner than 30 days after the Final CMRR EIS is issued.

Signed in Washington, DC this 28th day of April, 2003.

Everet H. Beckner,

Deputy Administrator for Defense Programs, National Nuclear Security Administration.

[FR Doc. 03–12164 Filed 5–14–03; 8:45 am]

BILLING CODE 6450–01–P

FEDERAL COMMUNICATIONS COMMISSION

Notice of Public Information Collection(s) Being Reviewed by the Federal Communications Commission

May 7, 2003.

SUMMARY: The Federal Communications Commission, as part of its continuing effort to reduce paperwork burden invites the general public and other Federal agencies to take this opportunity to comment on the following information collection(s), as required by the Paperwork Reduction Act of 1995, Public Law 104–13. An agency may not conduct or sponsor a collection of information unless it displays a current valid control number. No person shall be subject to any penalty for failing to comply with a collection of information subject to the Paperwork Reduction Act (PRA) that does not display a valid control number. Comments are requested concerning (a) Whether the proposed collection of information is necessary for the proper performance of the functions of the Commission, including whether the information shall have practical utility; (b) the accuracy of the Commission's burden estimate; (c) ways to enhance the quality, utility, and clarity of the information collected; and (d) ways to minimize the burden of the collection of information on the respondents, including the use of automated collection techniques or other forms of information technology.

DATES: Written comments should be submitted on or before July 14, 2003. If you anticipate that you will be submitting comments, but find it difficult to do so within the period of time allowed by this notice, you should advise the contact listed below as soon as possible.

ADDRESSES: Direct all comments to Les Smith, Federal Communications Commission, Room 1–A804, 445 12th Street, SW., Washington, DC 20554, or via the Internet to *Leslie.Smith@fcc.gov*.

FOR FURTHER INFORMATION CONTACT: For additional information or copies of the information collection(s) contact Les Smith at 202–418–0217 or via the Internet at *Leslie.Smith@fcc.gov.*

SUPPLEMENTARY INFORMATION:

OMB Control Number: 3060–0249.

Title: Section 74.781, Station Records.

Form Number: N/A.

Type of Review: Extension of a currently approved collection.

Respondents: Business and other for-profit entities; not-for-profit institutions; State, Federal or Tribal Governments.

Number of Respondents: 7,400.

Estimated Time per Response: 0.75 hours.

Frequency of Response: Recordkeeping; annual reporting requirement.

Total Annual Burden: 5,735 hours.

Total Annual Costs: $666,000.

Needs and Uses: 47 CFR Section 74.781 requires licensees of low power television, TV translator and TV booster stations to maintain adequate records. FCC staff in field inspections used the records to ensure that reasonable measures are taken to maintain proper station operations and to ensure compliance with the Commission's rules.

Federal Communications Commission.

William F. Caton,

Deputy Secretary.

[FR Doc. 03–12058 Filed 5–14–03; 8:45 am]

BILLING CODE 6712–01–P

FEDERAL RESERVE SYSTEM

Change in Bank Control Notices; Acquisition of Shares of Bank or Bank Holding Companies

The notificants listed below have applied under the Change in Bank Control Act (12 U.S.C. 1817(j)) and § 225.41 of the Board's Regulation Y (12 CFR 225.41) to acquire a bank or bank holding company. The factors that are considered in acting on the notices are set forth in paragraph 7 of the Act (12 U.S.C. 1817(j)(7)).

The notices are available for immediate inspection at the Federal Reserve Bank indicated. The notices also will be available for inspection at the office of the Board of Governors. Interested persons may express their views in writing to the Reserve Bank indicated for that notice or to the offices of the Board of Governors. Comments must be received not later than May 29, 2003.

A. Federal Reserve Bank of San Francisco (Maria Villanueva, Consumer Regulation Group) 101 Market Street, San Francisco, California 94105-1579:

1. James Patrick Koehler, Aberdeen, South Dakota; to acquire additional voting shares of Valley Bancorp, Henderson, Nevada, and thereby indirectly acquire additional voting shares of Valley Bank, Henderson, Nevada.

Board of Governors of the Federal Reserve System, May 9, 2003.

Robert deV. Frierson,

Deputy Secretary of the Board.

[FR Doc. 03–12056 Filed 5–14–03; 8:45 am]

BILLING CODE 6210–01–S

FEDERAL RESERVE SYSTEM

Formations of, Acquisitions by, and Mergers of Bank Holding Companies; Correction

This notice corrects a notice (FR Doc. 03-11424) published on pages 24742 and 24743 of the issue for Thursday, May 8, 2003.

Under the Federal Reserve Bank of Boston heading, the entry for Citizens Financial Group, Inc., Providence Rhode Island, is revised to read as follows:

A. Federal Reserve Bank of Boston (Richard Walker, Community Affairs Officer) 600 Atlantic Avenue, Boston, Massachusetts 02106-2204:

1. Citizens Financial Group, Inc., Providence, Rhode Island; Royal Bank of Scotland, PLC, Theedinburgh; Royal Bank of Scotland Group PLC, Theedinburgh; and RBSG International Holdings Limited, Edinburgh, all in Scotland; to acquire 100 percent of the voting shares of Port Financial Corp., Brighton, Massachusetts, and its subsidiary, Cambridgeport Bank, Cambridge, Massachusetts, and to acquire up to 9.9 percent of the voting shares of Cambridge Bancorp, Cambridge, Massachusetts, and thereby indirectly acquire voting shares of Cambridge Trust Company, Cambridge, Massachusetts.

Comments on this application must be received by June 2, 2003.

Board of Governors of the Federal Reserve System, May 9, 2003.

Robert deV. Frierson,

Deputy Secretary of the Board.

[FR Doc. 03–12055 Filed 5–14–03; 8:45 am]

BILLING CODE 6210–01–S

DEPARTMENT OF HEALTH AND HUMAN SERVICES

Administration on Aging

[Program Announcement No. AoA–03–04]

Fiscal Year 2003 Program Announcement; Availability of Funds and Notice Regarding Applications

AGENCY: Administration on Aging, HHS.

ACTION: Announcement of availability of funds and request for applications.

SUMMARY: The Administration on Aging (AoA) announces that under this program announcement it will hold a competition for one award to support a National Consumer Protection Technical Resource Center at a federal share of approximately $450,000 per year for a project period of three years.

Legislative authority: The Health Insurance Portability and Accountability Act of 1996, the Older Americans Act, Public Law 106–501 (Catalog of Federal Domestic Assistance 93.048, Title IV and Title II Discretionary Projects).

Purpose of grant award: The purpose of this award is to establish one National Consumer Protection Technical Resource Center to provide advice, guidance and technical assistance to AoA's Senior Medicare Patrol (SMP) projects. These projects test the best ways of using the skills of retired nurses, doctors, accountants and other professionals to train seniors as expert resources to curb health care error, fraud, and abuse.

The award is a cooperative agreement because the Administration on Aging will be substantially involved in the development and execution of the activities of the grantee.

The applicant and AoA will negotiate a work plan which details activities necessary to implement advice, guidance and technical assistance to SMP projects. The applicant will develop strategies with AoA to replicate nationwide best practices of the SMP program. The AoA will plan national and regional conferences, forums and meetings to provide program information, training, and education. The applicant will participate in these events to report on the activities of the center.

The AoA will provide a contact person for the center's project director/staff to receive SMP grantee information and orientation on the resources available ''in house'' for start up activities. AOA will also conduct conference calls to identify priorities or as a tool for planning upcoming events. The grantee will be required to report semiannually on the progress of this project. Based on the review of the report, AoA will negotiate any modifications needed to the cooperative agreement. At the end of each budget period, the AoA will review the project's performance and determine at the time if future funding is justified.

Eligibility for grant awards and other requirements: Public and non-profit agencies, organizations, institutions, and federally recognized tribes are eligible to apply under this program announcement. Faith-based organizations are eligible to apply. To be considered for funding, however, the applicant must be experienced in providing advice, guidance and technical assistance to Medicare fraud educational/outreach efforts.

Executive Order 12372 is not applicable to this grant application.

Grantees must cover at least 25% of the project's total cost with non-federal cash or in-kind resources. Grantees must contribute at least one (1) dollar in non-federal cash or in-kind resources for every three (3) dollars received in federal funding.

Screening criteria: All applications will be screened to assure a level playing field for all applicants. Applications that fail to meet the screening criteria described below will not be reviewed and will not receive further consideration.

1. Applications must be postmarked by midnight, June 30, 2003, or hand-delivered by 5:30 p.m. Eastern Time, on June 30, 2003, or submitted electronically by midnight, June 30, 2003.

2. Electronic submissions must be sent to: *http://www.aoa.gov/egrants.* Note: For electronic submissions, the required signature form must be postmarked by midnight, June 30, 2003, or hand-delivered by 5:30 p.m., Eastern Time, on June 30, 2003.

3. The Project Narrative section of the application must not exceed 20 pages. Page fifteen of the application kit details the components of the application not included in this limitation.

Review of Applications: Applications will be evaluated against the following criteria: Purpose and Need for Assistance. (20 Points), Approach, Work Plan and Activities. (30 Points), Project Outcomes, Evaluation and Dissemination. (30 Points); and Level of Effort (20 points).

DATES: The deadline date for the submission of applications is June 30, 2003.

ADDRESSES: Application kits are available by writing to the U.S. Department of Health and Human Services, Administration on Aging, Office of Consumer Choice and Protection, Washington, DC 20201, by calling (202) 357–3532, or online at *http://www.aoa.gov/egrants.*

Applications may be mailed to the U.S. Department of Health and Human Services, Administration on Aging, Office of Grants Management, Washington, DC 20201, attn: Margaret Tolson (AoA–03–04).

Applications may be delivered to the U.S. Department of Health and Human Services, Administration on Aging, Office of Grants Management, One Massachusetts Avenue, NW., Room 4604, Washington, DC 20201, attn: Margaret Tolson (AoA–03–04).

If you elect to mail or hand deliver your application you must submit one original and two copies of the application; an acknowledgement card will be mailed to all applicants.

SUPPLEMENTARY INFORMATION: All grant applicants are encouraged to obtain a D–U–N–S number from Dun and Bradstreet. It is a nine-digit identification number, which provides unique identifiers of single business entities. The D–U–N–S number is free and easy to obtain from *http://www.dnb.com/US/duns_update/.*

FOR FURTHER INFORMATION CONTACT: U.S. Department of Health and Human Services, Administration on Aging, Office of Consumer Choice and Protection, Washington, DC 20201, telephone: (202) 357–3532.

Dated: May 12, 2003.

Josefina G. Carbonell,

Assistant Secretary for Aging.

[FR Doc. 03–12133 Filed 5–14–03; 8:45 am]

BILLING CODE 4154–01–P

DEPARTMENT OF HEALTH AND HUMAN SERVICES

Centers for Disease Control and Prevention

[Program Announcement 04001]

Grants for Education Programs in Occupational Safety and Health; Notice of Availability of Funds

Application Deadline: July 1, 2003.

A. Authority and Catalog of Federal Domestic Assistance Number

This program is authorized under section 670(a) of the Occupational Safety and Health Act (29 U.S.C. 670 (a)). The Catalog of Federal Domestic Assistance number is 93.263.

B. Purpose

The Centers for Disease Control and Prevention (CDC) announces the availability of fiscal year (FY) 2004 funds for a grant program for institutional training grants in occupational safety and health. This program addresses the ''Healthy People 2010'' focus area of Occupational Safety and Health.

The National Institute for Occupational Safety and Health (NIOSH) is mandated to provide an adequate supply of qualified personnel to carry out the purposes of the Occupational Safety and Health Act. The specific purpose of this program is to provide financial assistance to eligible applicants to assist in providing an adequate supply of qualified professional occupational safety and health personnel. Projects are funded to support Occupational Safety and Health Education and Research Center Training Grants (ERCs) and Training Project Grants (TPGs).

ERCs are academic institutions that provide interdisciplinary graduate training and continuing education in the industrial hygiene, occupational health nursing, occupational medicine, occupational safety, and closely related occupational safety and health fields. The ERCs also serve as regional resource centers for industry, labor, government, and the public. TPGs are academic institutions that primarily provide single-discipline graduate training in the industrial hygiene, occupational health nursing, occupational medicine, occupational safety, and closely related occupational safety and health fields. Measurable outcomes of the program will be in alignment with one or more of the following performance goals for the National Institute for Occupational Safety and Health: Ensure safer and healthier work environments for all Americans through information dissemination, knowledge transfer, and training.

C. Eligible Applicants

Any public or private educational or training institution that has demonstrated competency in the occupational safety and health field and is located in a State, the District of Columbia, the Commonwealth of Puerto Rico, the Virgin Islands, American Samoa, Guam, the Trust Territory of the Pacific Islands, Wake Island, Outer Continental Shelf lands defined in the Outer Continental Shelf Lands Act, Johnston Island, and any other U.S. Territory or Trust Territory not named herein are eligible to apply for an institutional training grant.

Applications may be submitted by:

- Universities.
- Colleges.
- Technical schools.

Note: Title 2 of the United States Code section 1611 states that an organization described in section 501c(4) of the Internal Revenue Code that engages in lobbying activities is not eligible to receive Federal funds constituting an award, grant or loan.

D. Funding

Availability of Funds

Approximately $3,825,000 is anticipated in FY 2004 to fund approximately 23 ERC and TPG awards, subject to availability of funds. It is expected that the awards will begin on or about July 1, 2004 and will be made for a 12-month budget period within a project period of up to 5 years. Funding estimates may change. ERC individual program awards will be made for a 12-month budget period within a project period not to exceed that of the main ERC training grant.

Continuation awards within an approved project period will be made on the basis of satisfactory progress as evidenced by required reports and the availability of funds.

Use of Funds

At least 50 percent of the funds awarded for each grant must be used for direct trainee expenses. Post-doctoral trainee support is discouraged with the exception of occupational medicine residents. Under this announcement, only one award will be made to any single institution or organization.

Recipient Financial Participation

Matching funds are not required for this program.

Funding Preferences

Funding for ERCs: Approximately $2,640,000 of the total funds available will be utilized as follows:

1. Approximately $2,400,000 is available to award four competing continuation or new ERC grants. This includes a total of $160,000 to augment the support of trainees in occupational medicine residency programs. Awards will range from $400,000 to $800,000 with the average award being $600,000.

2. Approximately $120,000 is available to award two competing continuation or new training grants; one of the awards is planned for $60,000 for a Hazardous Substance Academic Training (HSAT) Program and one of the awards is planned for $60,000 for a Hazardous Substance Training (HST) Program. The awards are to support the development and presentation of continuing education and short courses (HST Programs), and academic curricula (HSAT Programs) for trainees and professionals engaged in the management of hazardous substances. Program support is available for faculty and staff salaries, trainee costs, and other costs to provide training and education for occupational safety and health and other professional personnel engaged in the evaluation, management, and handling of hazardous substances.

3. Approximately $120,000 is available to award two competing continuation or new grants to support the enhancement of the ERC research training mission through the support of pilot project research training programs.

Funding for TPGs: Approximately $780,000 is available to fund twelve competing continuation or new TPG grants. Awards will range from $20,000 to $100,000, with the average award being $65,000. This includes a total of $40,000 to augment the support of trainees in occupational medicine residency programs. These awards will support academic programs in the core disciplines (*i.e.*, industrial hygiene, occupational health nursing, occupational medicine, and occupational safety and ergonomics) and relevant components (*e.g.*, occupational injury prevention, industrial toxicology, and ergonomics).

These awards are intended to augment the scope, enrollment, and quality of training programs rather than to replace funds already available for current operations.

Funding for ERCs and TPGs: Approximately $405,000 is available to fund three competing continuation or new grants for occupational injury prevention research training. Awards will range from $75,000 to $150,000, with the average award being $135,000. This program is intended to encourage new occupational injury prevention research training programs and will only support doctoral-level training and trainees. In institutions with existing NIOSH-funded occupational safety/ergonomics and/or injury epidemiology programs, funding will be considered for the addition of a doctoral-level program only if it is not part of the existing NIOSH-funded program. For the purpose of this announcement, only doctoral-level programs with a specific concentration in occupational injury

prevention will be considered. The proposed program must be described in detail, with objectives, competencies and how achieved in specified courses, curricula, recruitment, faculty and other program features. Institutions submitting proposed programs under this announcement that also have existing NIOSH-funded programs in safety/ergonomics and/or injury epidemiology must describe in detail how the proposed program differs from the existing program. In some instances, it may be necessary to replace the existing program funding with funding available under this announcement.

E. Program Requirements

In conducting activities to achieve the purpose of this program, the recipient will be responsible for the following activities that define the ERC and TPG programs to be conducted:

1. All Applicants are required to provide Measures of Effectiveness that will demonstrate the accomplishment of the various objectives of the grant. Measures must be objective/quantitative and must measure the intended outcomes. These Measures of Effectiveness shall be submitted with the application and shall be an element of evaluation.

2. ERC Applicants shall be an identifiable organizational unit within the sponsoring organization. Applicants must meet the following characteristics in order to be considered for an award. If the characteristics are not met, the application will be considered non-responsive and will be returned to the applicant without a review.

a. Cooperative arrangements with a medical school or teaching hospital (with an established program in preventive or occupational medicine), a school of nursing or its equivalent, a school of public health or its equivalent, or a school of engineering or its equivalent. It is expected that other schools or departments with relevant disciplines and resources shall be represented and shall contribute as appropriate to the conduct of the total program, *e.g.*, epidemiology, toxicology, biostatistics, environmental health, law, business administration, and education. Specific mechanisms to implement the cooperative arrangements between departments, schools/colleges, universities, *etc.,* shall be demonstrated in order to assure that the intended interdisciplinary training and education will be engendered.

b. An ERC Director who possesses a demonstrated capacity for sustained productivity and leadership in occupational health and safety education and training. The Director shall oversee the general operation of the ERC Program and shall, to the extent possible, directly participate in training activities. A Deputy Director shall be responsible for managing the daily administrative duties of the ERC and to increase the ERC Director's availability to ERC staff and to the public.

c. Program Directors who are full-time faculty and professional staff representing various disciplines and qualifications relevant to occupational safety and health who are capable of planning, establishing, and carrying out or administering training projects undertaken by the ERC. Each academic program, as well as the continuing education and outreach program, shall have a Program Director.

d. Faculty and staff with demonstrated training and research expertise, appropriate facilities and ongoing training and research activities in occupational safety and health areas.

e. A program for conducting education and training for four core disciplines: Occupational physicians, occupational health nurses, industrial hygienists, and occupational safety personnel. ERC core academic programs are intended to provide multi-level practitioner and research training. Core academic programs should offer masters degrees and, in research institutions, doctoral degrees. There shall be a minimum of five full-time students or full-time equivalent students in each of the core programs and a minimum of three full-time students or full-time equivalent students in each of the component programs, with a goal of a minimum of 30 full-time students (total in all of core and component programs together). ERCs are encouraged to recruit and train minority students to help address the under-representation of minorities among the occupational safety and health professional workforce. Although it is desirable for an ERC to have the full range of core programs, an ERC with a minimum of three academic programs of which two are in the core disciplines is eligible for support providing it is demonstrated that students will be exposed to the principles and issues of all four core disciplines. In order to maximize the unique strengths and capabilities of institutions, consideration will be given to the development of new and innovative academic component programs that are relevant to the occupational safety and health field, *e.g.*, ergonomics, industrial toxicology, occupational injury prevention, occupational epidemiology, health services research, and agricultural safety and health; and to innovative technological approaches to training and education. ERCs must also document that the program covers an occupational safety and health discipline in critical need or meets a specific regional workforce need. Each core program curriculum shall include courses from non-core categories as well as appropriate clinical rotations and field experiences with public health and safety agencies and with labor-management health and safety groups. Where possible, field experience shall involve students representing other disciplines in a manner similar to that used in team surveys and other team approaches. ERCs should address the importance of providing training and education content related to special populations at risk, including minority workers and other sub-populations specified in the National Occupational Research Agenda (NORA) special populations at risk category.

f. A specific plan describing how trainees in core and component academic programs will be exposed to the principles of all other occupational safety and health core and allied disciplines. ERCs that apply as a consortium (contracting with other institutional partners) generally have geographic, policy and other barriers to achieving this ERC characteristic and, therefore, must give special, innovative, attention to thoroughly describing the approach for fulfilling interdisciplinary interaction between students.

g. Demonstrated impact of the ERC on the curriculum taught by relevant medical specialties, including family practice, internal medicine, dermatology, orthopedics, pathology, radiology, neurology, perinatal medicine, psychiatry, *etc.,* and on the curriculum of undergraduate, graduate and continuing education of primary core disciplines as well as relevant medical specialties and the curriculum of other schools such as engineering, business, and law.

h. An outreach program to interact with and help other institutions or agencies located within the region. Programs shall be designed to address regional needs and implement innovative strategies for meeting those needs. Partnerships and collaborative relationships shall be encouraged between ERCs and TPGs. Programs to address the under-representation of minorities among occupational safety and health professionals shall be encouraged. Specific efforts should be made to conduct outreach activities to develop collaborative training programs with academic institutions serving minority and other special populations, such as Tribal Colleges and Universities, Historically Black Colleges and

Universities, and Hispanic-Serving Institutions. Examples of outreach activities might include: Interaction with other colleges and schools within the ERC and with other universities or institutions in the region to integrate occupational safety and health principles and concepts within existing curricula (*e.g.*, Colleges of Business Administration, Engineering, Architecture, Law, and Arts and Sciences); exchange of occupational safety and health faculty among regional educational institutions; providing curriculum materials and consultation for curriculum/course development in other institutions; use of a visiting faculty program to involve labor and management leaders; cooperative and collaborative arrangements with professional societies, scientific associations, and boards of accreditation, certification, or licensure; and presentation of awareness seminars to undergraduate and secondary educational institutions (*e.g.*, high school science fairs and career days) as well as to labor, management and community associations.

i. A specific plan for preparing, distributing and conducting courses, seminars and workshops to provide short-term and continuing education training courses for physicians, nurses, industrial hygienists, safety engineers and other occupational safety and health professionals, paraprofessionals and technicians, including personnel from labor-management health and safety committees, in the geographical region in which the ERC is located. The goal shall be that the training be made available to a minimum of 400 trainees per year representing all of the above categories of personnel, on an approximate proportional basis with emphasis given to providing occupational safety and health training to physicians in family practice, as well as industrial practice, industrial nurses, and safety engineers. Priority shall be given to establishing new and innovative training technologies, including distance learning programs and to short-term programs designed to prepare a cadre of practitioners in occupational safety and health. Where appropriate, it shall be professionally acceptable that Continuing Education Units (as approved by appropriate professional associations) may be awarded. These courses should be structured so that higher educational institutions, public health and safety agencies, professional societies or other appropriate agencies can utilize them to provide training at the local level to occupational health and safety personnel working in the workplace. Further, the ERC shall conduct periodic training needs assessments, shall develop a specific plan to meet these needs, and shall have demonstrated capability for implementing such training directly and through other institutions or agencies in the region. The ERC should establish and maintain cooperative efforts with labor unions, government agencies, and industry trade associations, where appropriate, thus serving as a regional resource for addressing the problems of occupational safety and health that are faced by State and local governments, labor and management.

j. A Board of Advisors or Consultants representing the user and affected population, including representatives of labor, industry, government agencies, academic institutions and professional associations, shall be established by the ERC. The Board should meet at least annually to advise an ERC Executive Committee and to provide periodic evaluation of ERC activities. The Executive Committee shall be composed of the ERC Director and Deputy Director, academic Program Directors, the Director for Continuing Education and Outreach and others whom the ERC Director may appoint to assist in governing the internal affairs of the ERC.

k. A plan to incorporate research training into all aspects of training and, in research institutions, as documented by on-going funded research and faculty publications, a defined research training plan for training doctoral-level researchers in the occupational safety and health field. The plan will include how the ERC intends to strengthen existing research training efforts, how it will integrate research training activities into the curriculum, field and clinical experiences, how it will expand these research activities to have an impact on other primarily clinically-oriented disciplines, such as nursing and medicine, and how it will build on and utilize existing research opportunities in the institution. Each ERC is required to identify or develop a minimum of one, preferably more, areas of research focus related to work environment problems. Consideration should be given to the CDC/NIOSH priority research areas identified in the National Occupational Health Research Agenda (NORA). Further information regarding NORA may be found at the CDC/NIOSH Internet address: *http://www.cdc.gov/niosh/norhmpg.html.* The research training plan will address how students will be instructed and instilled with critical research perspectives and skills. This training will emphasize the importance of developing and working on interdisciplinary teams appropriate for addressing a research issue. It should also prepare students with the skill necessary for developing research protocols, pilot studies, outreach efforts to transfer research findings into practice, and successful research proposals. Such components of research training will require the ERCs to strive toward developing the faculty composition and administrative infrastructure essential to being Centers of Excellence in Occupational Safety and Health Research Training that are required to train research leaders of the future. The plan should address the incremental growth of such elements and evaluation of the plan commensurate with funds available. In addition to the research training components, the plan will also include such items as specific strategies for obtaining student and faculty funding, plans for acquiring equipment, if appropriate, and a plan for developing research-oriented faculty.

1. Evidence in obtaining support from other sources, including other Federal grants, support from States and other public agencies, and support from the private sector including grants from foundations and corporate endowments, chairs, and gifts.

3. TPG Applicants must document that the program covers an occupational safety and health discipline in critical need or meets a specific regional workforce need. There shall be a minimum of three full-time students or full-time equivalent students in each academic program. Applicants should address the importance of providing training and education content related to special populations at risk, including minority and disadvantaged workers. The types of training currently eligible for support are:

a. Graduate training for practice, teaching, and research careers in occupational safety and health. Priority will be given to programs producing graduates in areas of greatest occupational safety and health need. Strong consideration will be given to the establishment of innovative training technologies including distance learning programs.

b. Undergraduate and other pre-baccalaureate training providing trainees with capabilities for positions in occupational safety and health professions.

c. Special technical or other programs for long-term training of occupational safety and health technicians or specialists.

F. Content

Applications

The Program Announcement title and number must appear in the application. Use the information in the Program Requirements, Other Requirements, and Evaluation Criteria sections to develop the application content. Your application will be evaluated on the criteria listed, so it is important to follow them in laying out your program plan. The narrative should be no more than fifteen pages per program, single-spaced, printed on one side, with one-inch margins, and unreduced 12-point font. The print must be clear and legible. Use standard size, black letters that can be clearly copied. Do not use photo reduction. Prepare all graphs, diagrams, tables, and charts in black ink. The application must contain only material that can be photocopied. Do not include course catalogue and course brochures. When additional space is needed to complete any of the items, use plain white paper (8.5 x 11 inches), leave one inch margins on each side, identify each item by its title, and type the name of the program director and the grant number (if the application is a competitive renewal) in the upper right corner of each page. All pages, including Appendices should be numbered consecutively at least one-half inch from the bottom edge.

Please consult the detailed Recommended Outline for Preparation of Competing New/Renewal Training Grant Applications (CDC 2.145 A) available at the Internet address listed in section J.

G. Submission and Deadline

Application Forms

Submit the signed original and two copies of CDC 2.145 A–ERC or TPG (OMB Number 0920–0261). Applications should be clearly identified as an application for an ERC Training Grant or TPG Training Grant. Forms are available at the following Internet address: *http://www.cdc.gov/od/pgo/forminfo.htm.*

If you do not have access to the Internet, or if you have difficulty accessing the forms on-line, you may contact the CDC Procurement and Grants Office Technical Information Management Section (PGO–TIM) at: 770–488–2700. Application forms can be mailed to you.

Submission Date, Time, and Address

The application must be received by 4 p.m. Eastern Time July 1, 2003. Submit the application to: Technical Information Management—PA#04001, CDC Procurement and Grants Office, 2920 Brandywine Road, Atlanta, GA 30341–4146.

Applications may not be submitted electronically.

CDC Acknowledgement of Application Receipt

A postcard will be mailed by PGO–TIM, notifying you that CDC has received your application.

Deadline

Applications shall be considered as meeting the deadline if they are received before 4 p.m. Eastern Time on the deadline date. Any applicant who sends their application by the United States Postal Service or commercial delivery services must ensure that the carrier will be able to guarantee delivery of the application by the closing date and time. If an application is received after closing due to (1) carrier error, when the carrier accepted the package with a guarantee for delivery by the closing date and time, or (2) significant weather delays or natural disasters, CDC will upon receipt of proper documentation, consider the application as having been received by the deadline.

Any application that does not meet the above criteria will not be eligible for competition, and will be discarded. The applicant will be notified of their failure to meet the submission requirements.

H. Evaluation Criteria

Application

Applicants are required to provide measures of effectiveness that will demonstrate the accomplishment of the various identified objectives of the grant. Measures of effectiveness must relate to the performance goals stated in the purpose section of this announcement. Measures must be objective and quantitative and must measure the intended outcome. These measures of effectiveness must be submitted with the application and will be an element of evaluation.

Upon receipt, applications will be reviewed by CDC/NIOSH for completeness. Incomplete applications will be returned to the applicant without further consideration. Those applications judged to be competitive will be further evaluated individually against the following criteria and the extent to which they have been met. The initial peer review will be conducted by means of a panel meeting or site visit. The purpose of the initial review is to obtain basic information regarding elements of the proposed training grant program and to provide a technical report as input to the Special Emphasis Panel. Site visits will be made for new ERC and TPG applications, competing continuation ERC applications, and competing continuation TPG applications that have undergone major program changes during the previous project period. Since the site visits are not assured and depend on the availability of funds, the application is considered a complete document for review purposes. All other competing continuation applications will be initially reviewed by a panel. This panel review includes telephone communication with the proposed Program Directors and serves to clarify elements of the application and answer reviewer questions. Site visitors and panel members are extramural peer reviewers with education and expertise in specific occupational safety and health disciplines.

The final official peer review will be conducted by a Special Emphasis Panel (SEP) appointed by CDC. SEP members are extramural peer reviewers with occupational safety and health expertise in the program areas under review, and include selected members of initial site visit and panel review teams. Each of the following criteria will be addressed and considered by the peer reviewers in assigning the overall priority score weighting them as appropriate for each application. If an application is deemed responsive and of significant merit, a priority score will be assigned using the 100–500 range representing adjectival equivalents from outstanding (100) to acceptable (500). Note that applications do not need to be strong in all categories to be judged likely to have a major scientific impact and thus deserve a good priority score. The NIOSH Training Grants Council provides an internal programmatic review and provides funding recommendations to the Director of NIOSH based programmatic relevance of competing applications to the NIOSH goals and objectives.

The Special Emphasis Panel will evaluate each application against the following criteria:

1. ERC comprehensive evaluation criteria are as follows:

a. Plans to satisfy the regional needs for training in the areas outlined by the application, including projected enrollment, recruitment and current workforce populations. Special consideration should be given to the development of programs addressing the under-representation of minorities among occupational safety and health professionals. Indicators of regional need should include measures utilized by the ERC such as previous record of training and placement of graduates.

The need for supporting students in allied disciplines must be specifically justified in terms of user community requirements.

b. Extent to which arrangements for day-to-day management, allocation of funds and cooperative arrangements are designed to effectively achieve the Characteristics of an Education and Research Center (see E.2).

c. The establishment of new and innovative programs and approaches to training and education relevant to the occupational safety and health field and based on documentation that the program meets specific regional workforce needs. In reviewing such proposed programs, consideration should be given to the developing nature of the program and its capability to produce graduates who will meet such workforce needs.

d. Extent to which curriculum content and design includes formalized training objectives, minimal course content to achieve degree, course descriptions, course sequence, additional related courses open to occupational safety and health students, time devoted to lecture, laboratory and field experience, and the nature of specific field and clinical experiences including their relationships with didactic programs in the educational process.

e. Academic training including the number of full-time and part-time students and graduates for each core and component program, the placement of graduates, employment history, and their current location by type of institution (academic, industry, labor, etc.). Previous continuing education training in each discipline and outreach activity and assistance to groups within the ERC region.

f. Methods in use or proposed methods for evaluating the effectiveness of training and outreach including the use of placement services and feedback mechanisms from graduates as well as employers, innovative strategies for meeting regional needs, critiques from continuing education courses, and reports from consultations and cooperative activities with other universities, professional associations, and other outside agencies.

g. Competence, experience and training of the ERC Director, the Deputy ERC Director, the Program Directors and other professional staff in relation to the type and scope of training and education involved.

h. Institutional commitment to ERC goals. An example of institutional commitment to the long-term stability of ERC programs is the commitment of tenured or tenure-track faculty positions to each participating academic program.

i. Academic and physical environment in which the training will be conducted, including access to appropriate occupational settings.

j. Extent to which the budget is adequate, justified, and consistent with the intended use of the grant funds. This includes a separate budget for the academic staff's time and effort in continuing education and outreach.

k. Evidence of the integration of research experience into the curriculum, and field and clinical experiences. In institutions seeking funds for doctoral and post-doctoral (physician training) level research training, evidence of a plan describing the research and research training the ERC proposes. This should include goals, elements of the program, research faculty and amount of effort, support faculty, facilities and equipment available and needed, and methods for implementing and evaluating the program.

l. Evidence of success in attaining outside support to supplement the ERC grant funds including other Federal grants, support from States and other public agencies, and support from the private sector including grants from foundations and corporate endowments, chairs, and gifts.

m. Evidence of a strategy to evaluate the impact that the ERC and its programs have had on the region served by the Center. Examples could include a continuing education needs assessment and action plan, a workforce needs survey and action plan, consultation and research programs provided to address regional occupational safety and health problems, the impact on primary care practice and training, a program graduate data base to track the employment history and contributions of graduates to the occupational safety and health field, and the cost effectiveness of the program.

n. Past performance based on evaluation of the most recent CDC/NIOSH Peer Review Summary Statement and the grant application Progress Report (Competing Continuation applications only).

2. ERC specialty program evaluation criteria are as follows:

a. Hazardous Substance Training Program in Education and Research Centers:

(1) Relevance of the proposed project to each element of the characteristics of a hazardous substance training program.

(2) Comprehensiveness and soundness of the training plan developed to carry out the proposed activities. This is based on a documented need for the training and evidence to support the approach used to provide the required training. It includes descriptions of the scope and magnitude of the hazardous substance problem in the region served by the ERC and current activities and training efforts.

(3) Education and experience of the Project Director, faculty, and staff assigned to this project with respect to handling, managing or evaluating hazardous substance sites and to the training of professionals in this field.

(4) Creativity and innovation of the project leadership with respect to marketing the courses, structure in attracting trainees and/or providing incentives for training.

(5) Extent to which the applicant considered the work of relevant agencies involved in hazardous substance activities, including EPA, and cooperated with these agencies in developing and implementing this training program.

(6) Suitability of facilities and equipment available for this project.

(7) Extent to which the budget is adequate, justified, and consistent with the intended use of the grant funds.

b. Agricultural Safety and Health Education Programs in Education and Research Centers:

(1) Evidence of a needs assessment directed to the overall contribution of the training program toward meeting the job market, especially within the applicant's region, for qualified personnel to carry out the purposes of the Occupational Safety and Health Act of 1970. The needs assessment should consider the regional requirements for outreach, continuing education, information dissemination and special industrial or community training needs that may be peculiar to the region.

(2) Evidence of a plan to satisfy the regional needs for training in the areas outlined by the application, including projected enrollment, recruitment and current workforce populations. The need for supporting students in allied disciplines must be specifically justified in terms of user community requirements.

(3) The extent to which arrangements for day-to-day management, allocation of funds and cooperative arrangements are designed to effectively achieve characteristics of an ERC.

(4) The extent to which curriculum content and design includes formalized training objectives, minimal course content to achieve degree, course descriptions, course sequence, additional related courses open to occupational safety and health students, time devoted to lecture, laboratory and field experience, and the nature of specific field and clinical experiences

including their relationships with didactic programs in the educational process.

(5) Previous record of academic training in agricultural safety and health including the number of full-time and part-time students and graduates, the placement of graduates, employment history, and their current location by type of institution (academic, industry, labor, etc.). Previous record of continuing education training in agricultural safety and health and record of outreach activity and assistance to agricultural groups within the ERC region.

(6) Methods in use or proposed for evaluating the effectiveness of training and services including the use of placement services and feedback mechanisms from graduates as well as employers, critiques from continuing education courses, and reports from consultations and cooperative activities with other universities, professional associations, and other outside agencies.

(7) The competence, experience and training of the Program Director and other professional staff in relation to the type and scope of training and education involved.

(8) Institutional commitment to Center goals.

(9) Academic and physical environment in which the training will be conducted, including access to appropriate occupational agricultural settings.

(10) Extent to which the budget is adequate, justified, and consistent with the intended use of the grant funds. This includes the budget for the academic program and the continuing education and outreach program.

(11) Evidence of a plan describing the agricultural safety and health training the Center proposes. This should include goals, elements of the program, faculty and amount of effort, support faculty, facilities and equipment available and needed, and methods for implementing and evaluating the program.

(12) Evidence of success in attaining outside support to supplement the ERC grant funds including other federal grants, support from states and other public agencies, and support from the private sector including grants from foundations and corporate endowments, chairs, and gifts.

c. Hazardous Substance Academic Training Program in Education and Research Centers:

(1) Evidence of a needs assessment directed to the overall contribution of the proposed training program toward meeting the needs of the job market, especially within the applicant's region. The needs assessment should consider the regional requirements for hazardous substance training, information dissemination and special industrial, labor or community training needs that may be peculiar to the region.

(2) Evidence of a plan to satisfy regional needs for training in the areas outlined by the application, including Program projected enrollment and recruitment and current workforce populations.

(3) The extent to which the HSAT curriculum content and design includes: Formalized training objectives; minimal course content to achieve a degree or successful completion of the specialty area requirements; course descriptions; course sequence; additional related courses open to occupational safety and health students; time devoted to lecture, laboratory, and field experience; and the nature of specific field and clinical experiences including their relationships with didactic programs in the educational process.

(4) Previous record of academic and/or short course training delivered in the hazardous substances field, including the number and type of students trained. Previous record of hazardous substances outreach activity and assistance to hazardous substance groups within the ERC's region.

(5) Methods in use or proposed for evaluating the effectiveness of training and services including the use of placement services and feedback mechanisms from graduates as well as employers, student evaluations from academic and continuing education courses, and reports from consultations and cooperative activities with other universities, professional associations, and other outside agencies.

(6) The competence, experience and training of the Program Director and other professional staff in relation to the type and scope of training and education involved.

(7) Institutional commitment to HSAT Program goals.

(8) Academic and physical environment in which the training will be conducted.

(9) Extent to which the budget is adequate, justified, and consistent with the intended use of the grant funds. This includes the budget required to support the training courses developed, as well as accounting for the academic staff's time.

(10) Evidence of a plan describing the hazardous substances academic training the Center proposes. This should include goals, elements of the program, faculty and amount of effort, support faculty, facilities and equipment available and needed, and methods for implementing and evaluating the program.

(11) Evidence of success in attaining outside support to supplement the ERC grant funds including other federal grants, support from states and other public agencies, and support from the private sector including grants from foundations and corporate endowments, chairs, and gifts.

(12) Extent to which the applicant has collaborated with state and federal agencies having hazardous substance management functions, including the U.S. Environmental Protection Agency, and has cooperated with the agencies in developing and implementing this program.

d. ERC Pilot Project Research Training Programs:

(1) Relevance of the proposed program, including objectives that are specific and consistent.

(2) Adequacy of the plan proposed to conduct the pilot projects program, including procedures for reviewing and funding projects, the scientific review mechanism, and program quality assurance.

(3) Extent to which the applicant demonstrates collaboration with other research training institutions in the region, including NIOSH Training Project Grantees.

(4) Education and experience of the proposed Research Training Program Director and faculty in the occupational safety and health field, including the utilization of pilot projects as a research training mechanism.

(5) Extent to which the budget is adequate, justified, and consistent with the intended use of the grant funds.

(6) Adequacy of the plan to evaluate the effectiveness of the proposed pilot projects program.

(7) Gender and minority issues—Are plans to include women, ethnic, and racial groups adequately developed (as appropriate for the scientific goals of the pilot projects)? (See AR–2, Requirements for Inclusion of Women and Racial and Ethnic Minorities in Research.)

e. ERC Health Services Research Training Programs:

(1) Evidence of a plan to satisfy the need for training in the area outlined by the application, including projected enrollment, recruitment and job opportunities. Indicators of need may include measures utilized by the Program such as previous record of training and placement of graduates. Indicate the potential contribution of the project toward meeting the need for this specialized training.

(2) Extent to which arrangements for day-to-day management, allocation of

funds and cooperative arrangements are designed to effectively achieve the program requirements.

(3) Evidence of a plan describing the academic and research training the program proposes. This should include goals, elements of the program, research faculty and amount of effort, support faculty, facilities and equipment available and needed, and methods for implementing and evaluating the program.

(4) Extent to which curriculum content and design includes formalized training objectives, minimal course content to achieve degree, course descriptions, course sequence, additional related courses open to students, time devoted to lecture, and clinical and research experience addressing the relationship with didactic programs in the educational process.

(5) The extent to which the program effort is capable of supporting the number and type of students proposed.

(6) Extent to which the program has initiated collaborative relationships with external agencies and institutions to expand and strengthen its research capabilities by providing student and faculty research opportunities.

(7) Evidence of previous record of training in health services research and occupational safety and health, including placement of graduates and employment history.

(8) The extent to which the program documents methods in use or proposed methods for evaluating the effectiveness of the training, including the use of feedback mechanisms from graduates and employers, placement of graduates in research positions, research accomplishments of graduates and reports from consultations and cooperative activities with other universities, professional associations, and other outside agencies.

(9) Competence, experience and training of the Program Director, faculty and advisors in relation to the type and scope of research training and education involved.

(10) Degree of institutional commitment to Program goals.

(11) Adequacy of the academic and physical environment in which the training will be conducted, including access to appropriate occupational health research resources.

(12) The extent to which the budget is reasonable, adequately justified, and consistent with the intended use of the grant funds.

(13) Evidence of a plan for establishment of an Advisory Committee, including meeting times, roles and responsibilities.

3.TPG evaluation criteria are as follows:

a. Need for training in the program area outlined by the application. This should include documentation of a plan for student recruitment, projected enrollment, job opportunities, regional need both in quality and quantity, and for programs addressing the under-representation of minorities in the profession of occupational safety and health.

b. Potential contribution of the project toward meeting the needs for graduate or specialized training in occupational safety and health.

c. The establishment of new and innovative programs and approaches to training and education relevant to the occupational safety and health field and based on documentation that the program meets specific regional workforce needs. In reviewing such proposed programs, consideration should be given to the developing nature of the program and its capability to produce graduates who will meet such workforce needs.

d. Curriculum content and design which should include formalized program objectives, minimal course content to achieve degree, course sequence, related courses open to students, time devoted to lecture, laboratory and field experience, nature and the interrelationship of these educational approaches. There should also be evidence of integration of research experience into the curriculum, and field and clinical experiences.

e. Previous records of training in this or related areas, including placement of graduates.

f. Methods proposed to evaluate effectiveness of the training.

g. Degree of institutional commitment: Is grant support necessary for program initiation or continuation? Will support gradually be assumed? Is there related instruction that will go on with or without the grant? An example of institutional commitment to the long-term stability of TPG programs is the commitment of tenured or tenure-track faculty positions to each academic program.

h. Adequacy of facilities (classrooms, laboratories, library services, books, and journal holdings relevant to the program, and access to appropriate occupational settings).

i. Competence, experience, training, time commitment to the program and availability of faculty to advise students, faculty/student ratio, and teaching loads of the program director and teaching faculty in relation to the type and scope of training involved. The program director must be a full-time faculty member.

j. Admission Requirements: Student selection standards and procedures, student performance standards and student counseling services.

k. Advisory Committee: Membership, industries and labor groups represented; how often they meet; who they advise, role in designing curriculum and establishing program need. The Committee should meet at least annually to provide advice and periodic evaluation of TPG activities.

l. Evidence of a strategy to evaluate the impact that the program has had on the region. Examples could include a workforce needs survey and action plan, consultation and research programs provided to address regional occupational safety and health problems, a program graduate data base to track the employment history and contributions of graduates to the occupational safety and health field, and the cost effectiveness of the program.

m. Past performance based on evaluation of the most recent CDC/NIOSH Peer Review Summary Statement and the grant application Progress Report (Competing Continuation applications only).

n. Extent to which the budget is adequate, justified, and consistent with the intended use of the grant funds.

4. ERC and TPG applications for Occupational Injury Prevention Research Training Programs evaluation criteria are as follows:

a. Evidence of a plan to satisfy the need for training in the area outlined by the application, including projected enrollment, recruitment and job opportunities. Indicators of need may include measures utilized by the Program such as previous record of training and placement of graduates. Indicate the potential contribution of the project toward meeting the need for this specialized training.

b. Extent to which arrangements for day-to-day management, allocation of funds and cooperative arrangements are designed to effectively achieve the program requirements.

c. Evidence of a plan describing in detail the research training the program proposes. This should include goals, elements of the program, research faculty and amount of effort, support faculty, facilities and equipment available and needed, and methods for implementing and evaluating the program.

d. Extent to which curriculum content and design includes formalized training objectives, minimal course content to achieve degree, course descriptions,

course sequence, additional related courses open to students, time devoted to lecture, and clinical and research experience addressing the relationship with didactic programs in the educational process.

e. The extent to which the program effort is capable of supporting the number and type of students proposed.

f. Extent to which the program has initiated collaborative relationships with external agencies and institutions to expand and strengthen its research capabilities by providing student and faculty research opportunities.

g. Evidence of previous record of training in occupational injury prevention, including placement of graduates and employment history.

h. The extent to which the applicant documents methods in use or proposed methods for evaluating the effectiveness of the training, including the use of feedback mechanisms from graduates and employers, placement of graduates in research positions, research accomplishments of graduates and reports from consultations and cooperative activities with other universities, professional associations, and other outside agencies.

i. Competence, experience and training of the Program Director, faculty and advisors in relation to the type and scope of research training involved.

j. Degree of institutional commitment to Program goals. An example of institutional commitment to the long-term stability of academic programs is the commitment of tenured or tenure-track faculty positions to each participating academic program.

k. Adequacy of the academic and physical environment in which the training will be conducted, including access to appropriate occupational injury prevention research resources.

l. The extent to which the budget is adequate, justified, and consistent with the intended use of the grant funds.

m. Evidence of a plan for establishment of an Advisory Committee, including meeting times, roles and responsibilities.

I. Other Requirements

Technical Reporting Requirements

Provide CDC with original plus two copies of:

1. The initial interim progress report is due December 1, 2004. This report is required on December 1, on an annual basis. The progress report will serve as your non-competing continuation application, and must contain the following elements:

a. Current Budget Period Objectives and Activities.

b. Current Budget Period Financial Progress.

c. New Budget Period Program Proposed Activities and Objectives.

d. Detailed Line-Item Budget and Justification.

e. Additional Requested Information.

2. Financial status report, no more than 90 days after the end of each budget period. The initial report is due September 30, 2005.

3. Final financial and performance reports, no more than 90 days after the end of the project period.

Send all reports to the Grants Management Specialist identified in the ''Where to Obtain Additional Information'' section of this announcement.

Additional Requirements:

The following additional requirements are applicable to this program. For a complete description of each, see Attachment I of the program announcement, as posted on the CDC Web site.

AR–2* Requirements for Inclusion of Women and Racial and Ethnic Minorities in Research
AR–3* Animal Subjects Requirements
AR–10 Smoke-Free Workplace Requirements
AR–11 Healthy People 2010
AR–12 Lobbying Restrictions

*Applies only to ERC Pilot Project Research Training Program applications.

Executive Order 12372 does not apply to this program.

J. Where To Obtain Additional Information

This and other CDC announcements, the necessary applications, and associated forms can be found on the CDC Web site, Internet address: *http://www.cdc.gov.* Click on ''Funding'' then ''Grants and Cooperative Agreements''.

For general questions about this announcement, contact: Technical Information Management, CDC Procurement and Grants Office, 2920 Brandywine Road, Atlanta, GA 30341–4146, Telephone: 770–488–2700.

For business management and budget assistance, contact: Cynthia Y. Mitchell, Grants Management Specialist, Procurement and Grants Office, Program Announcement 04001, Centers for Disease Control and Prevention (CDC), 626 Cochrans Mill Rd., Mailstop P05, Pittsburgh, PA 15236, Telephone: (412) 386–6434, e-mail address: *CMitchell@cdc.gov.*

For program technical assistance, contact: John T. Talty, Principal Engineer, Office of Extramural Programs, National Institute for Occupational Safety and Health, Centers for Disease Control and Prevention (CDC), 4676 Columbia Parkway, Mailstop C–7, Cincinnati, OH 45226–1998, Telephone (513) 533–8241, e-mail address: *jtt2@cdc.gov.*

Dated: May 9, 2003.

Sandra R. Manning,

Director, Procurement and Grants Office, Centers for Disease Control and Prevention (CDC).

[FR Doc. 03–12107 Filed 5–14–03; 8:45 am]

BILLING CODE 4163–19–P

DEPARTMENT OF HEALTH AND HUMAN SERVICES

Food and Drug Administration

[Docket No. 02N–0077]

Agency Information Collection Activities; Announcement of OMB Approval; Emergency Medical Device Shortage Program Survey

AGENCY: Food and Drug Administration, HHS.

ACTION: Notice.

SUMMARY: The Food and Drug Administration (FDA) is announcing that a collection of information entitled ''Emergency Medical Device Shortage Program Survey'' has been approved by the Office of Management and Budget (OMB) under the Paperwork Reduction Act of 1995.

FOR FURTHER INFORMATION CONTACT: Peggy Robbins, Office of Information Resources Management (HFA–250), Food and Drug Administration, 5600 Fishers Lane, Rockville, MD 20857, 301–827–1223.

SUPPLEMENTARY INFORMATION: In the **Federal Register** of March 17, 2003 (68 FR 12705), the agency announced that the proposed information collection had been submitted to OMB for review and clearance under 44 U.S.C. 3507. An agency may not conduct or sponsor, and a person is not required to respond to, a collection of information unless it displays a currently valid OMB control number. OMB has now approved the information collection and has assigned OMB control number 0910–0491. The approval expires on January 31, 2004. A copy of the supporting statement for this information collection is available on the Internet at *http://www.fda.gov/ohrms/dockets.*

Dated: May 9, 2003.

Jeffrey Shuren,

Assistant Commissioner for Policy.

[FR Doc. 03–12191 Filed 5–14–03; 8:45 am]

BILLING CODE 4160–01–S

DEPARTMENT OF HEALTH AND HUMAN SERVICES

Food and Drug Administration

[Docket No. 03N–0187]

Agency Information Collection Activities; Proposed Collection; Comment Request; Postmarket Surveillance of Medical Devices

AGENCY: Food and Drug Administration, HHS.

ACTION: Notice.

SUMMARY: The Food and Drug Administration (FDA) is announcing an opportunity for public comment on the proposed collection of certain information by the agency. Under the Paperwork Reduction Act of 1995 (the PRA), Federal agencies are required to publish notice in the **Federal Register** concerning each proposed collection of information, including each proposed extension of an existing information collection, and to allow 60 days for public comment in response to the notice. This notice solicits comments on information collection requirements for postmarket surveillance (PS) of medical devices.

DATES: Submit written or electronic comments on the collection of information by July 14, 2003.

ADDRESSES: Submit electronic comments on the collection of information to *http://www.accessdata.fda.gov/scripts/oc/dockets/edockethome.cfm*. Submit written comments on the collection of information to the Dockets Management Branch (HFA–305), Food and Drug Administration, 5630 Fishers Lane, rm. 1061, Rockville, MD 20852. All comments should be identified with the docket number found in brackets in the heading of this document.

FOR FURTHER INFORMATION CONTACT: Peggy Robbins, Office of Information Resources Management (HFA–250), Food and Drug Administration, 5600 Fishers Lane, Rockville, MD 20857, 301–827–1223.

SUPPLEMENTARY INFORMATION: Under the PRA (44 U.S.C. 3501–3520), Federal agencies must obtain approval from the Office of Management and Budget (OMB) for each collection of information they conduct or sponsor. ''Collection of information'' is defined in 44 U.S.C. 3502(3) and 5 CFR 1320.3(c) and includes agency requests or requirements that members of the public submit reports, keep records, or provide information to a third party. Section 3506(c)(2)(A) of the PRA (44 U.S.C. 3506(c)(2)(A)) requires Federal agencies to provide a 60-day notice in the **Federal Register** concerning each proposed collection of information including each proposed extension of an existing collection of information, before submitting the collection to OMB for approval. To comply with this requirement, FDA is publishing notice of the proposed collection of information set forth in this document.

With respect to the following collection of information, FDA invites comments on: (1) Whether the proposed collection of information is necessary for the proper performance of FDA's functions, including whether the information will have practical utility; (2) the accuracy of FDA's estimate of the burden of the proposed collection of information, including the validity of the methodology and assumptions used; (3) ways to enhance the quality, utility, and clarity of the information to be collected; and (4) ways to minimize the burden of the collection of information on respondents, including through the use of automated collection techniques, when appropriate, and other forms of information technology.

Postmarket Surveillance of Medical Devices—21 CFR Part 822 (OMB Control Number 0910–0449)—Extension

Section 522(a) of the Federal Food, Drug, and Cosmetic Act (the act) (21 U.S.C. 360l(a)) authorizes the FDA to require manufacturers to conduct PS of any device that meets the criteria set forth in the statute.

The PS regulation in part 822 (21 CFR part 822) establishes procedures that FDA uses to approve and disapprove PS plans. The regulation provides specific, clear, and flexible instructions to manufacturers so they know what information is required in a PS plan submission. FDA reviews submissions in accordance with §§ 822.15 through 822.18 (which describe the grounds for approving or disapproving a PS plan). If this information is not collected, FDA cannot ensure that the PS will result in the collection of useful data that can reveal unforeseen adverse events or other information necessary to protect the public health.

Respondents to this collection of information are those manufacturers who require PS of their products. As previously stated, the collection of data and information under these regulations is conducted on a very infrequent basis and only as necessary.

FDA estimates the burden of this collection of information as follows:

TABLE 1.—ESTIMATED ANNUAL REPORTING BURDEN[1]

21 CFR Section	No. of Respondents	Total Annual Responses	No. of Responses	Hours per Response	Total Hours
822.9 and 822.10	5	1	5	120	600
822.21	2	1	2	40	80
822.26	1	1	1	8	8
822.27	1	1	1	40	40
822.28	1	1	1	40	40
822.29	1	1	1	120	120
822.30	1	1	1	40	40
822.34	1	1	1	20	20
822.38	23	2	46	80	3,680

TABLE 1.—ESTIMATED ANNUAL REPORTING BURDEN[1]—Continued

21 CFR Section	No. of Respondents	Total Annual Responses	No. of Responses	Hours per Response	Total Hours
Totals					4,628

[1] There are no capital costs or operating and maintenance costs associated with this collection of information.

TABLE 2.—ESTIMATED ANNUAL RECORDKEEPING BURDEN[1]

21 CFR Section	No. of Recordkeepers	Total Annual Records	No. of Records	Hours per Record	Total Hours
822.31	23	1	23	20	460
822.32	69	1	69	10	690
Totals					1,150

[1] There are no capital costs or operating and maintenance costs associated with this collection of information.

FDA estimates, based on current staffing and resources, only one actual PS action and manufacturers' aversion to the stigma of PS over the past year. One PS action will be issued for generic devices comprising of approximately five manufacturers. Each manufacturer will be required to submit a PS plan (§§ 822.9 and 822.10) and interim and final reports on the progress of the surveillance (§ 822.38). FDA anticipates that, on a case-by-case basis, requests for additional information may be made from a manufacturer. FDA expects that a small number of respondents will propose changes to their PS plans (§ 822.21), request a waiver of a specific requirement of this regulation (§ 822.29), or request exemption from the requirement to conduct PS of their device (§ 822.30). FDA's experience has shown that a few respondents will go out of business (§ 822.26) or cease marketing the device subject to PS (§ 822.28) each year. In addition, manufacturers must certify transfer of records when ownership changes (§ 822.34).

Section 822.25 does not constitute information collections subject to review under the PRA because "* * * they entail no burden other than that necessary to identify the respondent, the date, the respondent's address, and the nature of the instrument * * *" (5 CFR 1320.3(h)(1)).

FDA expects that at least some of the manufacturers will be able to satisfy the PS requirement using information or data they already have. For purposes of calculating burden, however, FDA has assumed that each PS order can only be satisfied by a 3-year clinically-based surveillance plan, using three investigators. These estimates are based on FDA's knowledge and experience with limited implementation of section 522 of the act under the Safe Medical Devices Act of 1990. Therefore, FDA would expect that the recordkeeping requirements would apply to a maximum of 23 manufacturers (6 added each year) and 69 investigators (3 years per surveillance plan). After 3 years, FDA would expect these numbers to remain level as the surveillance plans conducted under the earliest orders reach completion and new orders are issued.

Dated: May 9, 2003.

Jeffrey Shuren,

Assistant Commissioner for Policy.

[FR Doc. 03–12192 Filed 5–14–03; 8:45 am]

BILLING CODE 4160–01–S

DEPARTMENT OF HEALTH AND HUMAN SERVICES

Food and Drug Administration

[Docket No. 03D–0137]

Medical Devices: Draft Guidance for Industry and FDA; Surgical Masks—Premarket Notification Submissions; Availability

AGENCY: Food and Drug Administration, HHS.

ACTION: Notice.

SUMMARY: The Food and Drug Administration (FDA) is announcing the availability of the draft guidance for industry entitled "Surgical Masks—Premarket Notification (510(k)) Submissions; Draft Guidance for Industry and FDA." This draft guidance is intended to assist industry in preparing premarket notification submissions for surgical masks. This draft guidance is neither final nor is it in effect at this time.

DATES: Submit written or electronic comments on this draft guidance by June 16, 2003.

ADDRESSES: Submit written requests for single copies on a 3.5″ diskette of the draft guidance entitled "Surgical Masks—Premarket Notification (510(k)) Submissions; Draft Guidance for Industry and FDA" to the Division of Small Manufacturers, International, and Consumer Assistance (HFZ–220), Center for Devices and Radiological Health, Food and Drug Administration, 1350 Piccard Dr., Rockville, MD 20850. Send two self-addressed adhesive labels to assist that office in processing your request or fax your request to 301–443–8818. See the **SUPPLEMENTARY INFORMATION** section for information on electronic access to the draft guidance.

Submit written comments on the draft guidance to the Dockets Management Branch (HFA–305), Food and Drug Administration, 5630 Fishers Lane, rm. 1061, Rockville, MD 20852. Submit electronic comments to *http://www.fda.gov/dockets/ecomments*. Identify comments with the docket number found in brackets in the heading of this document.

FOR FURTHER INFORMATION CONTACT: Chiu S. Lin, Center for Devices and Radiological Health (HFZ–480), Food and Drug Administration, 9200 Corporate Blvd., Rockville, MD 20850, 301–443–8913.

SUPPLEMENTARY INFORMATION:

I. Background

FDA previously issued on its Web site a draft guidance entitled "Draft Guidance for Industry and FDA Reviewers on the Content and Format of Premarket Notification (510(k)) Submissions for Surgical Mask" on January 16, 1998; however, no notice of availability was published in the **Federal Register**. We are seeking to correct that error by issuing the draft guidance again for comment with a notice of availability in the **Federal**

Register. FDA will consider the comments received and make every effort to issue the draft guidance for implementation in a reasonable time after the comment period has closed.

We have also revised the draft guidance by adding information concerning industry's option to submit an abbreviated 510(k) and retitled the guidance for clarity.

II. Significance of Guidance

This draft guidance is being issued consistent with FDA's good guidance practices regulation (21 CFR 10.115). The draft guidance, when finalized, will represent the agency's current thinking on surgical masks. It does not create or confer any rights for or on any person and does not operate to bind FDA or the public. An alternative approach may be used if such approach satisfies the requirements of the applicable statute and regulations.

III. Paperwork Reduction Act of 1995

This draft guidance contains information collection provisions that are subject to review by the Office of Management and Budget (OMB) under the Paperwork Reduction Act of 1995 (the PRA) (44 U.S.C. 3501–3520). The collections of information addressed in the draft guidance have been approved by OMB in accordance with the PRA under the regulations governing premarket notification submissions (21 CFR part 807, subpart E, OMB control number 0910–0120). The labeling provisions addressed in the draft guidance have been approved by OMB under the PRA under OMB control number 0910–0485.

IV. Comments

Interested persons may submit to the Dockets Management Branch (see **ADDRESSES**) written or electronic comments on the draft guidance. Submit a single copy of electronic comments to *http://www.fda.gov/dockets/ecomments*. Submit two paper copies of any mailed comments. Identify comments with the docket number found in brackets in the heading of this document. The draft guidance and received comments are available for public examination in the Dockets Management Branch between 9 a.m. and 4 p.m., Monday through Friday.

V. Electronic Access

The CDRH Web site may be accessed at *http://www.fda.gov/cdrh*. A search capability for all CDRH guidance documents are also available on the Dockets Management Branch Internet site at *http://www.fda.gov/ohrms/dockets*.

To receive a copy of ''Surgical Masks—Premarket Notification (510(k)) Submissions; Draft Guidance for Industry and FDA'' by fax, call the CDRH Facts-On-Demand system at 800–899–0381 or 301–827–0111 from a touch-tone telephone. Press 1 to enter the system. At the second voice prompt, press 1 to order a document. Enter the document number (094) followed by the pound sign (#). Follow the remaining voice prompts to complete your request.

Persons interested in obtaining a copy of the draft guidance may also do so by using the Internet. CDRH maintains a site on the Internet for easy access to information including text, graphics, and files that may be downloaded to a personal computer with Internet access. Updated on a regular basis, the CDRH home page includes device safety alerts, **Federal Register** reprints, information on premarket submissions (including lists of approved applications and manufacturers' addresses), small manufacturer's assistance, information on video conferencing and electronic submissions, Mammography Matters, and other device-oriented information.

Dated: May 5, 2003.

Linda S. Kahan,

Deputy Director, Center for Devices and Radiological Health.

[FR Doc. 03–12193 Filed 5–14–03; 8:45 am]

BILLING CODE 4160–01–S

DEPARTMENT OF HEALTH AND HUMAN SERVICES

Health Resources and Services Administration

Agency Information Collection Activities: Proposed Collection: Comment Request

In compliance with the requirement for opportunity for public comment on proposed data collection projects (section 3506(c)(2)(A) of Title 44, United States Code, as amended by the Paperwork Reduction Act of 1995, Public Law 104–13), the Health Resources and Services Administration (HRSA) publishes periodic summaries of proposed projects being developed for submission to the Office of Management and Budget under the Paperwork Reduction Act of 1995. To request more information on the proposed project or to obtain a copy of the data collection plans and draft instruments, call the HRSA Reports Clearance Officer on (301) 443–1129.

Comments are invited on: (a) Whether the proposed collection of information is necessary for the proper performance of the functions of the Agency, including whether the information shall have practical utility; (b) the accuracy of the Agency's estimate of the burden of the proposed collection of information; (c) ways to enhance the quality, utility, and clarity of the information to be collected; and (d) ways to minimize the burden of the collection of information on respondents, including the use of automated collection techniques or other forms of information technology.

Proposed Project: The National Health Service Corps (NHSC) Professional Training and Information Questionnaire (PTIQ) (OMB No. 0915–0208)—Revision

The National Health Service Corps (NHSC) of the HRSA's Bureau of Health Professions (BHPr), is committed to improving the health of the Nation's underserved by uniting communities in need with caring health professionals and by supporting communities' efforts to build better systems of care.

The National Health Service Corps (authorized by the Public Health Services Act, section 331) collects data on its programs to ensure compliance with legislative mandates and to report to Congress and policymakers on program accomplishments. To meet these objectives, the NHSC requires a core set of information collected annually that is appropriate for monitoring and evaluating performance and reporting on annual trends.

The PTIQ is used to collect data related to professional issues from NHSC-obligated Scholarship Program Recipients including physicians, physician assistants (PAs), nurse practioners (NPs), certified nurse midwives (CNMs), and other disciplines in the current year's placement cycle. This data is used to match an individual health care professional with the most appropriate clinical practice setting.

The PTIQ will be mailed twelve months in advance of the intended service availability date. Estimates of annualized reporting burden are as follows:

Type of respondent	Number of respondents	Responses per respondent	Hours per response	Total burden hours
Health Care Professionals	311	1	5 min	26

Send comments to Susan G. Queen, Ph.D., HRSA Reports Clearance Officer, Room 14–45, Parklawn Building, 5600 Fishers Lane, Rockville, MD 20857. Written comments should be received within 60 days of this notice.

Dated: May 9, 2003.

Jane M. Harrison,

Director, Division of Policy Review and Coordination.

[FR Doc. 03–12195 Filed 5–14–03; 8:45 am]

BILLING CODE 4165–15–P

DEPARTMENT OF HEALTH AND HUMAN SERVICES

Health Resources and Services Administration

HRSA–03–099 Fiscal Year 2003 Competitive Cycle for the Bioterrorism Training and Curriculum Development Program (BCDF) 93.996

AGENCY: Health Resources and Services Administration, HHS.

ACTION: Correction of deadline date.

SUMMARY: In notice document FR Doc. 03–10934, in the issue of Monday, May 5, 2003, make the following correction:

On page 23730, under the section Application Requests, Availability, Deadline and Addresses, in the third column, the application deadline date should read June 30, 2003.

Dated: May 9, 2003.

Jane M. Harrison,

Director, Division of Policy Review and Coordination.

[FR Doc. 03–12042 Filed 5–14–03; 8:45 am]

BILLING CODE 4165–15–P

DEPARTMENT OF HEALTH AND HUMAN SERVICES

Office of Inspector General

Program Exclusions: April 2003

AGENCY: Office of Inspector General, HHS.

ACTION: Notice of program exclusions.

During the month of April 2003, the HHS Office of Inspector General imposed exclusions in the cases set forth below. When an exclusion is imposed, no program payment is made to anyone for any items or services (other than an emergency item or service not provided in a hospital emergency room) furnished, ordered or prescribed by an excluded party under the Medicare, Medicaid, and all Federal Health Care programs. In addition, no program payment is made to any business or facility, *e.g.,* a hospital, that submits bills for payment for items or services provided by an excluded party. Program beneficiaries remain free to decide for themselves whether they will continue to use the services of an excluded party even though no program payments will be made for items and services provided by that excluded party. The exclusions have national effect and also apply to all Executive Branch procurement and non-procurement programs and activities.

Subject city, state	Effective date
PROGRAM-RELATED CONVICTIONS	
AGUILAR, DAVID HERAN FLORENCE, AZ	05/20/2003
ALCANTAR, EVA ALVAREZ LOS ANGELES, CA	05/20/2003
ALSAKER, ERIC ALLEN BUFFALO, MN	05/20/2003
ARIAS, JOSE PENSACOLA, FL	05/20/2003
ASHBAUGH, TERESA MARGE SALINA, KS	05/20/2003
BAIRD, CURTIS JAMES III YUCAIPA, CA	05/20/2003
BARNHOUSE, WILLIS HONOLULU, HI	05/20/2003
BARONOV, BORIS LOS ANGELES, CA	05/20/2003
BARRETT, DONNA M BARRE, VT	05/20/2003
BENSON, CARRIE L HILLSBORO, OH	05/20/2003
BRANDON, MARIA MIAMI, FL	05/20/2003
CAO, SANH FOUNTAIN VALLEY, CA	05/20/2003
CAPLAN, STEVEN HONOLULU, HI	05/20/2003
CASAS, OSIRIS MARIA MIAMI, FL	05/20/2003
CERDA, EDUARDO POMONA, CA	05/20/2003
CHANG, ALBERT MIAMI, FL	05/20/2003
CHASE, JANET A GREELY, CO	05/20/2003
CHAVEZ, LINDA MARTINEZ MONTEBELLO, CA	05/20/2003
COLEMAN, MAURICE ANN MARYSVILLE, WA	05/20/2003
COMPETENT CARE, INC NEWBURGH, NY	05/20/2003
CULLEN, KENNETH C WOODSIDE, NY	05/20/2003
DAVIS, TERRY B SARASOTA, FL	05/20/2003
EDMOND, DOROTY WESTBURY, NY	05/20/2003
ESPINOSA, ORLANDO MIAMI, FL	05/20/2003
FEENEY, ELIZABETH A CANAL WINCHESTER, OH	05/20/2003
FICK, MELISSA SPRINGFIELD, OH	05/20/2003
FINA, JEFFREY OKLAHOMA CITY, OK	05/20/2003
GASPARYAN, ANNA TARZANA, CA	05/20/2003
GONZALEZ, LILIA MIAMI, FL	05/20/2003
GONZALEZ, CARLOS J CHIPLEY, FL	05/20/2003
GREEN, BRANDI RAE TUCSON, AZ	05/20/2003
HERNANDEZ, VERONICA CATALINA HUNTINGTON PK, CA	05/20/2003
HERNANDO, GILDA MIAMI, FL	05/20/2003
HORNSHUH, DAVID L HONOLULU, HI	05/20/2003
HOWARD, JASON MURELLS INLET, SC	05/20/2003
JEREZ, EVARISTO MIAMI, FL	05/20/2003
KALADZHYAN, OGANES LOS ANGELES, CA	05/20/2003
KRAMER, MELODY ANN SPOKANE, WA	05/20/2003
LABRADOR, JESUS MANUEL TOPEKA, KS	05/20/2003
MAMBREYAN, NORAYR LOS ANGELES, CA	05/20/2003
MARTINEZ, JOE LA PUENTE, CA	05/20/2003
MED-CARE DISTRIBUTORS, INC SMITHVILLE, WV	05/20/2003
MIN, CHANPHIRUN MEANOWUTH DELANO, CA	05/20/2003
MITCHELL, JENNIFER LYNN DEL MAR, CA	05/20/2003
MOHAMMAD, KHADIJAH MARIANNA, FL	05/20/2003
MOHAMMED, KRISHNA EGLIN, FL	05/20/2003
MURPHY, HATTIE MAE MIAMI, FL	05/20/2003
PLUCER, MARK GERRY FLINT, MI	05/20/2003
ROBINSON, JEREMY WASHINGTON, DC	05/20/2003
SAAVEDRA, JOSE MIAMI, FL	05/20/2003
SALINAS, JOHN YOLMAN DORAVILLE, GA	05/20/2003
SALMANS, ROBERT S	05/20/2003

Subject city, state	Effective date
WOOSTER, OH	
SANCHEZ, JUAN MIAMI, FL	05/20/2003
SCHLAFF, RICHARD M TERRE HAUTE, IN	05/20/2003
SHAW, MARVIN LEROY SANDY, UT	05/20/2003
SOLOMON, MARCUS A DELMONT, NJ	05/20/2003
T-TECH MEDICAL SERVICES, INC SAFETY HARBOR, FL	05/20/2003
THIGPEN, JEFFERY JEROME DULUTH, MN	05/20/2003
THOMPSON, MICHAEL W LITHONIA, GA	05/20/2003
TONEY, LAURA NAMPA, ID	05/20/2003
TRANS-CAPITAL INVESTMENT GROUP TAMPA, FL	05/20/2003
TRIFAN, SHAUN KATHLEEN S PORTLAND, ME	05/20/2003
TY, HUYNH VAN RIALTO, CA	05/20/2003
URBANIK, MICHAEL STEPHEN CLAWSON, MI	05/20/2003
WEBER, DAVID C AUSTIN, TX	05/20/2003

FELONY CONVICTION FOR HEALTH CARE FRAUD

CARNEY, DEBORAH A LEWISVILLE, TX	05/20/2003
FINK, DAVID M METUCHEN, NJ	05/20/2003
HELLER, ELLIOT M NEW BRUNSWICK, NJ	05/20/2003
KATINE, SCOTT H MONTGOMERY, PA	05/20/2003
KRAMER, LARRY S POMONA, NY	05/20/2003
LAYSHOCK, DAVENE MARIE DENVER, CO	05/20/2003
MELCHOR, CYNTHIA VIOLETA PERRYSBURG, OH	05/20/2003
MEYER, MARILYN KAY WOLCOTT, IN	05/20/2003
NGUYEN, SANDY YUNG LUN SAN JOSE, CA	05/20/2003
NORBY, SCOTT BONITA, CA	05/20/2003
OLIVAS, DOLORES ANITA COLORADO SPRNGS, CO	05/20/2003
SADLER, ALANE K CLEVELAND, OH	05/20/2003
VOUGHT, RAYMOND JESSE SAN PEDRO, CA	05/20/2003

FELONY CONTROL SUBSTANCE CONVICTION

ANDERSON, GINA M PEMBROKE, MA	05/20/2003
ATHEY, ALAN JAMES AURORA, CO	05/20/2003
BUCHAR, CHRIS R BALTIMORE, MD	05/20/2003
BYRNE, MARY ANN EL CAJON, CA	05/20/2003
CHAMP, DEBORAH LEE REYNOLDSBURG, OH	05/20/2003
DENISCO, RICHARD ALAN LAKE MARY, FL	05/20/2003
FOLEY, COLLEEN BERNICE HEMPSTEAD, TX	05/20/2003
GRANDSTAFF, STEVEN WADE SEWARD, AK	05/20/2003
HUNTER, JERRY DEWAYNE INDIANAPOLIS, IN	05/20/2003
JONES, TONIANETTA DENISE MARIANNA, FL	05/20/2003
KITLOWSKI, MARY LOU AURORA, CO	05/20/2003
LONGCOR, MICHELLE GAY STOCKTON, CA	05/20/2003
LUCIER, KATHLEEN JOAN SONORA, CA	05/20/2003
MEADE, KIMBERLEY DAWN RALEIGH, NC	05/20/2003
MEDINA, GAY LYNN SAN ANTONIO, TX	05/20/2003
PERKINS, JANET UNIVERSITY CITY, MO	05/20/2003
RIBBENTROP, PAUL HENRY CLINTON TWNSHP, MI	05/20/2003
SHARP, LANA MARIE WHITESBORO, TX	05/20/2003

PATIENT ABUSE/NEGLECT CONVICTIONS

BENNETT, PATRICIA CANTON, MS	05/20/2003
BROTHERS, AELIA SINAE OKLAHOMA CITY, OK	05/20/2003
BURGESS, RANDY SHANE MITCHELL, SD	05/20/2003
BURT, TRACY OXFORD, MS	05/20/2003
COMPASSIONATE HOME CARE, INC MINNEAPOLIS, MN	05/20/2003
CORNISH, GEOFFREY LEONARD CORCORAN, CA	05/20/2003
EVANS, STEPANIE OCONOMOWOC, WI	05/20/2003
HERNANDEZ, JOSE SERGIO ABERDEEN, WA	05/20/2003
HINZO, ALEX GILBERT SANTA MARIA, CA	05/20/2003
HUDSON, SARAH E EXETER, NH	05/20/2003
HUMPHRIES, PAULINE CLEVELAND, OH	05/20/2003
KOENIG, RYAN G CLINTON, WI	05/20/2003
LOEB, CHARLES PHILLIP III LOS ANGELES, CA	05/20/2003
MARIER, KUIR G TUCSON, AZ	05/20/2003
MASSOUD, NIDAL E PALO ALTO, CA	05/20/2003
NEELY, MICHAEL T GREENFIELD, WI	05/20/2003
REILLY, TARA LENEXA, KS	05/20/2003
ROSENTHAL, DAVID K SACRAMENTO, CA	05/20/2003
SPRUCH, REZSO MORELIA, MEXICO	05/20/2003
VICTORIA, PAUL SHANE LACEY, WA	05/20/2003
WHALEN, MARTIN THORNTON, CO	05/20/2003
WICKRAM, IAN E TRACY, CA	05/20/2003
WILLIAMS, VASIE MANSFIELD, OH	05/20/2003
WISLA, PETER BERT PRESQUE ISLE, WI	05/20/2003
YOUNG, ELSIE MAE COATESVILLE, PA	05/20/2003

CONVICTION FOR HEALTH CARE FRAUD

VAUGHAN-SCHREIBER, JANIE. DOYLESTOWN, PA	05/20/2003

CONVICTION-OBSTRUCTION OF AN INVESTIGATION

ALTER, SUZI SHERMAN OAKS, CA	05/20/2003
LICARI, ANTHONY MICHAEL PEMBROKE PINES, FL	05/20/2003

LICENSE REVOCATION/SUSPENSION/SURRENDERED

AIKEN, RHONDA L MILTON, VT	05/20/2003
ALLEN, KIMBERLY ANN LYNN, MA	05/20/2003
BABB, STEPHEN REX PROVO, UT	05/20/2003
BAKER, SHERYL R WAYNESBORO, VA	05/20/2003
BLODGETT, ERIC R FRAMINGHAM, MA	05/20/2003
BREKOSKY, DENISE P DILLSBURG, PA	05/20/2003
BRENNAN, LORI JEAN MESA, AZ	05/20/2003
BROOKS, LYNNETTA PHOENIX, AZ	05/20/2003
BROOKS, LINDA DIXON, WY	05/20/2003
BROTHERTON, WILLIAM LESTER FORT COLLINS, CO	05/20/2003
BROWN, CATHY WICHITA, KS	05/20/2003
BROWN, NICOLA SUSAN DENVER, CO	05/20/2003
BRUCHIS, GARY ALAN LAKEWOOD, CO	05/20/2003
BURKE, JAMES BENJAMIN BIRMINGHAM, AL	05/20/2003
BUSHWAY, LEIGH ANN IRONDALE, AL	05/20/2003
BUSSE, WAYNE SCOTT SANTEE, CA	05/20/2003
CALAME, CYNTHIA DIANE ORRVILLE, AL	05/20/2003
CARBONELL, AUGUSTINA TUCSON, AZ	05/20/2003
CARMODY, CATHLEEN MARY PAT AURORA, CO	05/20/2003
CARPENTER, ETTA MARIE PHILPOT, KY	05/20/2003
CARTER, VALERIE JOSLIN PHOENIX, AZ	05/20/2003
CERROS, JUAN JOSE	05/20/2003

Subject city, state	Effective date
WEST WENDOVER, NV	
CHAPPLE, STEVEN TUCSON, AZ	05/20/2003
CLEMONS, REGINALD DEAN FORT COLLINS, CO	05/20/2003
CORSELLO, SERAFINA NEW YORK, NY	05/20/2003
CROSS, BRADLEY JAMES NILES, MI	05/20/2003
CROUCH, SHANNON CELESTE YUMA, AZ	05/20/2003
DALTON, DEL B SAN DIEGO, CA	05/20/2003
DANIEL, ELIZABETH GOODYEAR, AZ	05/20/2003
DAVIS, CHERYL L NORFOLK, VA	05/20/2003
DAVIS, ROY L FARMINGTON, NM	05/20/2003
DEZES, MARY ELLEN PALM COAST, FL	05/20/2003
DONLEY, PATRICIA GAIL SANTA CLARITA, CA	05/20/2003
DRISCOLL, NANCY ELLEN PHOENIX, AZ	05/20/2003
EDWARDS, LARRY JOSEPH PUEBLO, CO	05/20/2003
FARMER, ROBIN SUE TUCSON, AZ	05/20/2003
FAROOQI, WAQAR ALI AUBURN, NY	05/20/2003
FLEMING, TAMI S HOUSTON, TX	05/20/2003
FRANK, EDITH JENEAN VALLEJO, CA	05/20/2003
FRY, MICKEY L CORYDON, IA	05/20/2003
FULTON, CARL L DALLAS, TX	05/20/2003
GARDUNO, MARTHA LETICIA LOS ANGELES, CA	05/20/2003
GIBBONS, DARLA M YOUNGTOWN, AZ	05/20/2003
GILMORE, LESLIE R SANFORD, FL	05/20/2003
GOLDFINE, BRIAN DAVID PALM DESERT, CA	05/20/2003
GREENE, KIMBERLY LEIGH EUFAULA, AL	05/20/2003
HARDING, HARRIET A FLORENCE, MA	05/20/2003
HARVEY, MELINDA D GREENVILLE, MS	05/20/2003
HAYES, AUDREY MUZACZ PHOENIX, AZ	05/20/2003
HEMRICK, JENNIFER L KERRVILLE, TX	05/20/2003
HIGGINS, JENNIFER L LEWISTON, ME	05/20/2003
HOLT, GWENDOLYN ANNE RUSTBURG, VA	05/20/2003
HORNER, PHILIP STANLEY CONCORD, NH	05/20/2003
HOUSTEEN, DENIECE CHINLE, AZ	05/20/2003
HUFFMAN, JACQUELINE B SAFFORD, AZ	05/20/2003
HURST, LISA MARIE JOLIET, IL	05/20/2003
HURTADO, SANDRA G VENTURA, CA	05/20/2003
IRISH, IRENE ELIZABETH	05/20/2003
LAKE PLACID, FL	
JACKSON, KELLY P STAUNTON, VA	05/20/2003
JANES, STEVEN WILLIAM LOWELL, MA	05/20/2003
JIMENEZ, NANCY LEE INDIO, CA	05/20/2003
JONES, CHERYL R FORT LUPTON, CO	05/20/2003
KADERLIK, KAREN CATHERINE ST PAUL, MN	05/20/2003
KENNEDY, KEITH P LEECHBURG, PA	05/20/2003
KING, EDWARD JOSEPH III PHOENIX, AZ	05/20/2003
KINTER, MARK SILVON PEARCY, AR	05/20/2003
LAFONT, DONNA CHRISTIAN SAN JOSE, CA	05/20/2003
LANG, MARY ANN KERRVILLE, TX	05/20/2003
LARIMORE, SUSAN M MONTE VISTA, CO	05/20/2003
LASPISA, JOSEPH ANTHONY MELROSE PARK, IL	05/20/2003
LEUSCHEN, MARILYN LEE ERIE, PA	05/20/2003
LEVIN, JOEL L ELKINS PARK, PA	05/20/2003
LEVIN, PAULA B ELKINS PARK, PA	05/20/2003
LOVEJOY, LAWRENCE DARRYL SLOAN, IA	05/20/2003
MAHDY, HELMY MOHAMED BRIDGEPORT, CT	05/20/2003
MALAVE, RONALD C LAKE MARY, FL	05/20/2003
MALEKI, PEJMAN IRVINE, CA	05/20/2003
MARBUT, CATHY ANN BIRMINGHAM, AL	05/20/2003
MARLENEE, KEVIN ARLO DES MOINES, IA	05/20/2003
MCCONNAUGHEY, PAMELA S TUCSON, AZ	05/20/2003
MELTON, BRENDA FAYE ANCHORAGE, AK	05/20/2003
MESIROW, PATRICIA L ROANOKE, VA	05/20/2003
MICHEL, LESLIE NEW ORLEANS, LA	05/20/2003
MILES, DELTON L FLAGSTAFF, AZ	05/20/2003
MILKEY, JOHN JOSEPH LONG BEACH, CA	05/20/2003
MOAYEDPARDAZI, SEYED B DECATUR, AL	05/20/2003
MONET, DEBRA DAWN PUEBLO WEST, CO	05/20/2003
MOSES, BRUCE DONALD JR PINEVILLE, LA	05/20/2003
MURPHY, GAIL SUSAN PEORIA, AZ	05/20/2003
NAGORE, LYNNE MICHELLE TUCSON, AZ	05/20/2003
NEIBURG, DOROTHY E ESSEX JUNCTION, VT	05/20/2003
NOWAK, VALENTINE JARRETTSVILLE, MD	05/20/2003
O'DONNELL, DENISE MARIE	05/20/2003
LOS ANGELES, CA	
PARILLO, KELLY A PHOENIX, AZ	05/20/2003
PASTONES, DENNIS FERNANDEZ SAN FRANCISCO, CA	05/20/2003
PATRICK, MARY J LA SALLE, IL	05/20/2003
PEPPERS, BRETT FOUNTAIN HILLS, AZ	05/20/2003
PERRY, ANITA A NEWPORT NEWS, VA	05/20/2003
PETRIE, ROBERT JEFFERY ST AUGUSTINE, FL	05/20/2003
PEZOA, LOIS JACQUELINE DENVER, CO	05/20/2003
POOR, GREGORY SHAWN OMAHA, NE	05/20/2003
RAMMING, KENNETH PAUL LOS ANGELES, CA	05/20/2003
RANDEL, WILLIAM BRADLEY TUCSON, AZ	05/20/2003
REEVES, MYRNA LYNN TUCSON, AZ	05/20/2003
RINALDI, TODD CHARLES DENVER, CO	05/20/2003
ROACH, DEBRA PHOENIX, AZ	05/20/2003
ROBBINS, JILL PEORIA, AZ	05/20/2003
ROBERTSON, DONNA LEE GREENFIELD, IN	05/20/2003
ROBINSON, PHYLLIS D WESTBURY, NY	05/20/2003
ROUSSE, TONI F LONGMEADOW, MA	05/20/2003
RUSH, CARRIE GAY VALENCIA, CA	05/20/2003
SAFDARI, MEHDI ALTAMONTE SPRNGS, FL	05/20/2003
SANDERS, TANYA M CHICAGO, IL	05/20/2003
SCHNEIDER, LISA FITZGERALD PITTSBURGH, PA	05/20/2003
SCHRYVER, KIM ELAINE LAMAR, CO	05/20/2003
SCHWAB, BRENT L ELKRIDGE, MD	05/20/2003
SCULLY, KIMBERLY M PITTSBURGH, PA	05/20/2003
SELLERS, ANTHONY BRUCE ANAHEIM, CA	05/20/2003
SHURLAN, VLADIMIR P CAMBRIDGE, MA	05/20/2003
ST ROMAIN-KYLE, PAMELA A PEORIA, AZ	05/20/2003
STATHOULOPOULOS, PETER A WORCESTER, MA	05/20/2003
STONE, JEFFREY K SAN FRANCISCO, CA	05/20/2003
STUCKLESS, JENNIFER MARTHA TUCSON, AZ	05/20/2003
TATE, SHELLY R QUEEN CREEK, AZ	05/20/2003
TEFFT, JANICE MARLENE CENTRAL FALLS, RI	05/20/2003
THORNTON, LAWRENCE J THOMASTON, CT	05/20/2003
UTLEY, JOHN ROWLAND SANDIA, TX	05/20/2003
VANCOR, ALBERT SCOTT	05/20/2003

Subject city, state	Effective date
GREENVILLE, AL	
WAGHER, LISA KATHLEEN ... WILLIAMS, AZ	05/20/2003
WASSIF, ANTHONY A ..... RESEDSA, CA	05/20/2003
WEINBERG, ROBERT PAUL .. BOSTON, MA	05/20/2003
WEINBERG, MARC ..... COLUMBIA, MD	05/20/2003
WHITE, MARGARET ..... ASHEVILLE, NC	05/20/2003
WILSON, JOHN STROTHER ... MONTGOMERY, AL	05/20/2003
WILTFANG, CHRIS CHARLES ST SIMONS ISLAND, GA	05/20/2003
WITTRUP, LADONNA ALBERTINA ..... GREELEY, CO	05/20/2003
FEDERAL/STATE EXCLUSION/ SUSPENSION	
NATHAN, SYLVESTER ARTHUR ..... WOODRIDGE, IL	05/20/2003
NATOLI, DENNIS ..... RIVER EDGE, NJ	05/20/2003
SMOOTS, OLIVIA L ..... SACRAMENTO, CA	05/20/2003
OWNED/CONTROLLED BY CONVICTED ENTITIES	
BLOSSOM HILL DENTAL CARE ..... SAN JOSE, CA	05/20/2003
CALIXTO GARCIA MEDICAL CTR INC ..... MIAMI, FL	05/20/2003
DIAMOND DENTAL SERVICES, LLP ..... POCATELLO, ID	05/20/2003
FAMILY FIRST HEALTHCARE, INC ..... WICHITA, KS	05/20/2003
HOI LEE D D S ..... RENTON, WA	05/20/2003
NAT'L MEDICAL EQUIP & SUPPLIES ..... PLANTATION, FL	05/20/2003
PRINCIPLE MEDICAL MGMT, INC ..... HOLLYWOOD, CA	05/20/2003
ROLYJANE HOME CARE, INC MIAMI, FL	05/20/2003
SOLOMON'S INVALID COACH, INC ..... NEWARK, NJ	05/20/2003
UNION PHARMACY ..... MIAMI, FL	05/20/2003
DEFAULT ON HEAL LOAN	
BARBATO, BEVERLY V ..... SALEM, WV	04/03/2003
BILYEU, STUART WILLIAM .... ANN ARBOR, MI	05/20/2003
CROW, JOE A ..... ROCKY FORD, CO	05/20/2003
DIEDE, CLYDE A ..... WINNER, SD	05/20/2003
FLEMING, JAMES E JR ..... E CLEVELAND, OH	05/20/2003
LESINSKI, MARY CATHERINE CLEVELAND, OH	04/14/2003
MARTINEZ, JOSE R ..... MINEOLA, TX	05/20/2003
OWNERS OF EXCLUDED ENTITIES	
PARKER, CHARLIE A ..... MINNEAPOLIS, MN	05/20/2003
PARKER, ROBERTA CATO .... MINNEAPOLIS, MN	05/20/2003
CIVIL MONETARY PENALTY	
MATTHYS, JERRY A ..... SHAWNEE MISSION, KS	10/01/2002

Dated: May 1, 2003.

Katherine B. Petrowski,

Director, Exclusions Staff Office of Inspector General.

[FR Doc. 03–11681 Filed 5–14–03; 8:45 am]

BILLING CODE 4150–04–P

DEPARTMENT OF HEALTH AND HUMAN SERVICES

National Institutes of Health

Government-Owned Inventions; Availability for Licensing

AGENCY: National Institutes of Health, Public Health Service, DHHS.

ACTION: Notice.

SUMMARY: The inventions listed below are owned by agencies of the U.S. Government and are available for licensing in the U.S. in accordance with 35 U.S.C. 207 to achieve expeditious commercialization of results of federally-funded research and development. Foreign patent applications are filed on selected inventions to extend market coverage for companies and may also be available for licensing.

ADDRESSES: Licensing information and copies of the U.S. patent applications listed below may be obtained by writing to the indicated licensing contact at the Office of Technology Transfer, National Institutes of Health, 6011 Executive Boulevard, Suite 325, Rockville, Maryland 20852–3804; telephone: 301/496–7057; fax: 301/402–0220. A signed Confidential Disclosure Agreement will be required to receive copies of the patent applications.

Triggering Receptors Expressed in Myeloid Cells (TREM) Like Transcript (TLT–1), A Novel Inhibitory Receptor of Platelets and Uses Therefore

Daniel W. McVicar (NCI), A. Valence Washington (NCI), Laura Quigley (NCI)

DHHS Reference No. E–097–2003/0 filed March 16, 2003

Licensing Contact: Jeff Walenta; 301/435–4633; *walentaj@od.nih.gov.*

The human immune response involves a complex series of molecular interactions to produce a beneficial response to foreign invasion within the body. These molecular interactions orchestrate the specific responses of innate and adaptive immunity. When these interactions break down, immune related disorders such as cancer and sepsis arise.

This invention describes an advance in understanding the regulation of the immune response. Triggering Receptors in Myeloid Cells (TREM) recently were discovered to modulate innate and adaptive immunity. Specifically, TREM1 amplifies the response to sepsis in innate immunity by activating neutrophils and other leukocytes; and TREM2 potentiates dendritic cell maturation in adaptive immunity. This invention describes a new inhibitory TREM like Transcript, TLT–1.

TLT–1 is the first inhibitory receptor discovered to reside within the TREM gene locus. This discovery implies the receptor has an important regulatory role in both innate and adaptive immunity. Structurally, TLT–1 also possesses inhibitory domains that indicate this regulatory function. TLT–1 is highly expressed in peripheral blood platelets and may modulate many other types of myeloid cells. Potential therapeutic implications are for immune disorders, cancer, septic shock, infectious disease, stroke, heart disease, myocardial infarction, vascular disorders, and other platelet-associated disorders.

17–AAG Treatment of Diseases Sensitive to c-KIT Down Regulation

Gerard Fumo and Len Neckers (NCI)

DHHS Reference No. E–256–2002 filed 22 Oct 2002

Licensing Contact: George Pipia; 301/435–5560; *pipiag@od.nih.gov.*

This invention describes the use of 17-allylamino-17-demethoxygeldanamycin (17-AAG), a derivative of geldanamycin, which inhibits mutated KIT protein kinase activity (the product of proto-oncogene c-KIT). This kinase has been identified as the protein responsible for transformation of certain human cell types into pathologic cells. The invention is predicated on the discovery of a new method of inhibiting the activity of a mutated, constitutively active form of the tyrosine kinase, KIT. The method involves the administration of 17-AAG to a cell expressing the

mutated KIT protein, whereby the activity level of KIT in the cell is reduced. The invention may prove to be useful for treating diseases such as mastocytosis, gastrointestinal stromal tumors (GIST), mast cell leukemia, myelogenenous leukemia, and testicular cancer, all of which are associated with mutations in the c-KIT proto-oncogene.

Recombinant Vaccinia Viruses Expressing IL–15 and Methods of Using the Same

Liyanage Perera et al. (NCI)

Serial No. 60/433,703 filed 16 Dec 2002

Licensing Contact: Jonathan Dixon; 301/435–5559; *dixonj@od.nih.gov.*

Vaccinia-based vaccines have a proven record of being effective vaccines in humans as well as in animals. However, accumulating evidence reveals the need for technology to improve the immune responses such vaccines generate.

The present invention discloses recombinant vaccinia viruses capable of expressing interleukin 15 (IL–15), and methods for modulating immune responses using such viruses. This invention shows that by inserting the human IL–15 gene into the vaccinia genome, more effective vaccines can be generated against infectious agents and cancer. Currently, IL–2 has been approved by the FDA for use in the treatment of patients with metastatic renal cell carcinoma or with metastatic melanoma. It has been used as a component of cancer vaccines and in various approaches for the treatment of AIDS. However, administration of IL–2 is associated with activation-induced cell death (AICD), and may lead to death of T-cells that recognize the antigens expressed in the tumor cells. Thus, IL–15 may be a superior agent in the treatment of cancer, or as a component of a vaccine directed towards cancer or infectious agents. Co-delivery of IL–15 with antigens during the immunization process, according to the current invention, leads to induction of CD8+ memory T cells that proliferate more effectively in vivo and persist much longer in the immunized individual in addition to enhancing the levels and persistence of antigen specific antibodies thus providing substantially longer lasting cellular and humoral immunity.

This invention has the potential to be used in a variety of ways, including: (i) An improved, more efficacious vaccine candidate for smallpox, (ii) for incorporation into existing vaccinia based vaccines to enhance and confer superior long lasting immune response to viral and cancer antigens, or (iii) as a valuable source material for IL–15 production, especially should IL–15 be proven as an alternate of more efficacious cytokine than IL–2.

This research has been described, in part, in Proc. Natl. Acad. Sci USA 2003 Mar 18; 100(6):3392–3397.

DNA-Binding Polyamide Drug Conjugates

Zoltan Szekely, Humcha K. Hariprakasha, Marek W. Cholody, Christopher J. Michejda (NCI)

DHHS Reference No. E–060–2002/2–PCT–01 filed 27 Feb 2003 (PCT/US03/06006)

Licensing Contact: George Pipia; 301/435–5560; *pipiag@od.nih.gov.*

Many current anti-cancer drugs have the DNA of cancer cells as their principal target. However, in most instances, the drugs are not selective and are plagued by toxicities, which are frequently dose limiting. The present invention seeks to enhance anti-tumor selectivity and decrease unspecific toxicity. It has been known that various polyamides can target the minor groove of DNA, and rules have been devised to ascertain the sequence-reading properties of the component residues of the polyamide chain. The present invention utilizes sequence-selective polyamide technology together with groups that modify DNA, either by sequence-selective alkylation or strand cleavage. The DNA-modifying moieties that are used for this purpose are novel derivatives based on the cyclopropylbenzindole (CBI) core structure. These compounds alkylate the DNA only when bound into the minor groove, and they provide some DNA-sequence recognizing capability of their own. The DNA-modifying agents are either embedded in the polyamide chain as components of the chain or are located at the termini. These compounds are highly toxic to cancer cells that over-express a targeted DNA sequence (*e.g.* the c-Myc oncogene promoter sequence) and are much less toxic to non-cancerous tissue. The compounds of the present invention represent a novel method for targeting DNA of cancer cells.

SH2 Domain Binding Inhibitors

Terrence R. Burke, Jr., et al. (NCI)

DHHS Reference No. E–262–2000/1 filed 28 Jun 2002

Licensing Contact: George Pipia; 301/435–5560; *pipia@od.nih.gov.*

Signal transduction processes underlie the transfer of extracellular information to the interior of the cell and ultimately to the nucleus. A variety of signal transduction processes are critical for normal cellular homeostasis, with protein-tyrosine kinases (PTKs) playing central roles in many of these pathways. Examples of such PTKs include the PDGF receptor, the FGF receptor, the HGF receptor, members of the EGF receptor family, such as the EGF receptor, erb-B2, erb-B3 and erb-B4, the src kinase family, Fak kinase and the Jak kinase family. Protein-tyrosine phosphorylation that results from the action of PTKs can modulate the activity of certain target enzymes as well as facilitate the formation of specific multi-protein signaling complexes through the actions of homologous protein modules termed Src homology 2 (SH2) domains, which recognize specific phosphotyrosyl containging sequences. A malfunction in this system through tyrosine kinase overexpression and/or deregulation can be manifested by various oncogenic and hyperproliferative disorders, including cancers, inflammation, autoimmune disease, hyperproliferative skin disorders, psoriasis and allergy/asthma, etc. The disclosed compounds, *e.g.* peptides, preferably, macrocyclic peptides, are Grb2 SH2 domain signaling antagonists with enhanced binding affinity. The claims of the current application are directed to compositions of matter and methods of use which provide for the diagnosis, testing and treatment of the aforementioned disease states.

Dated: May 7, 2003.

Steven M. Ferguson,

Acting Director, Division of Technology Development and Transfer, Office of Technology Transfer, National Institutes of Health.

[FR Doc. 03–12102 Filed 5–14–03; 8:45 am]

BILLING CODE 4140–01–P

DEPARTMENT OF HEALTH AND HUMAN SERVICES

National Institutes of Health

National Cancer Institute; Notice of Closed Meeting

Pursuant to section 10(d) of the Federal Advisory Committee Act, as amended (5 U.S.C. Appendix 2), notice is hereby given of the following meeting.

The meeting will be closed to the public in accordance with the provisions set forth in sections 552b(c)(4) and 552b(c)(6), Title 5 U.S.C., as amended. The grant applications and the discussions could disclose confidential trade secrets or commercial

property such as patentable material, and personal information concerning individuals associated with the grant applications, the disclosure of which would constitute a clearly unwarranted invasion of personal privacy.

Name of Committee: National Cancer Institute Special Emphasis Panel; Rebuilding Immunity for Survival.

Date: May 22–23, 2003.

Time: 7 p.m. to 7 p.m.

Agenda: To review and evaluate grant applications.

Place: Wyndham City Center, 1143 New Hampshire Avenue, NW, Washington, DC 20037.

Contact Person: William D. Merritt, PhD, Scientific Review Administrator, Grants Review Branch, National Cancer Institute, National Institutes of Health, 6116 Executive Boulevard, Room 8034, MSC 8328, Bethesda, MD 20892–8328, 301–496–9767.

This notice is being published less than 15 days prior to the meeting due to the timing limitations imposed by the review and funding cycle.

(Catalogue of Federal Domestic Assistance Program Nos. 93.392, Cancer Construction; 93.393, Cancer Cause and Prevention Research; 93.394, Cancer Detection and Diagnosis Research; 93.395, Cancer Treatment Research; 93.396, Cancer Biology Research; 93.397, Cancer Centers Support; 93.398, Cancer Research Manpower; 93.399, Cancer Control, National Institutes of Health, HHS)

Dated: May 5, 2003.

Anna P. Snouffer,

Acting Director, Office of Federal Advisory Committee Policy.

[FR Doc. 03–11714 Filed 5–14–03; 8:45 am]

BILLING CODE 4140–01–M

DEPARTMENT OF HEALTH AND HUMAN SERVICES

National Institutes of Health

National Cancer Institute; Notice of Meeting

Pursuant to section 10(d) of the Federal Advisory Committee Act, as amended (5 U.S.C. Appendix 2), notice is hereby given of the meeting of the National Cancer Advisory Board.

The meeting will be open to the public as indicated below, with attendance limited to space available. Individuals who plan to attend and need special assistance, such as sign language interpretation or other reasonable accommodations, should notify the Contact Person listed below in advance of the meeting.

A portion of the meeting will be closed to the public in accordance with the provisions set forth in sections 552b(c)(4), and 552b(6), as amended. The grant applications and the discussions could disclose confidential trade secrets or commercial property such as patentable material, and personal information concerning individuals associated with the grant applications, the disclosure of which would constitute a clearly unwarranted invasion of personal privacy.

Name of Committee: National Cancer Advisory Board.

Dates: June 10, 2003.

Open: June 10, 2003, 8:30 a.m. to 12 p.m.

Agenda: Program reports and presentations; Business of the Board.

Place: National Cancer Institute, 9000 Rockville Pike, Building 31, C Wing, 6th Floor, Conference Room 10, Bethesda, MD 20892.

Contact: Dr. Paulette S. Gray, Acting Executive Secretary, National Cancer Institute, National Institutes of Health, 6116 Executive Boulevard, 8th Floor, Room 8141, Bethesda, MD 20892, (301) 496–4218.

Name of Committee: National Cancer Advisory Board, Ad Hoc Subcommittee on Confidentiality of Patient Data.

Open: June 10, 2003, 12 p.m. to 1 p.m.

Agenda: To discuss activities related to the Ad Hoc subcommittee on Confidentiality of Patient Data.

Place: National Cancer Institute, 9000 Rockville Pike, Building 31, C Wing, 6th Floor, Conference Room 10, Bethesda, MD 20892.

Contact Person: Ms. Mary McCabe, Executive Secretary, Ad Hoc Subcommittee on Confidentiality of Patient Data, National Cancer Institute, National Institutes of Health, 9000 Rockville Pike, Building 31, Room 3A44, Bethesda, MD 20892, (301) 496–6404.

Name of Committee: National Cancer Advisory Board, Subcommittee on Clinical Investigations.

Open: June 10, 2003, 12 p.m. to 1 p.m.

Agenda: To discuss activities related to the Subcommittee on Clinical Investigations.

Place: National Cancer Institute, 9000 Rockville Pike, Building 31, C Wing, 6th Floor, Conference Room 8, Bethesda, MD 20892.

Contact Person: Dr. Ellen Feigal, Executive Secretary, Subcommittee on Clinical Investigations, National Cancer Institute, National Institutes of Health, 9000 Rockville Pike, Building 31, Room 3A44, Bethesda, MD 20892, (301) 496–4291.

Name of Committee: National Cancer Advisory Board.

Open: June 10, 2003, 1 p.m. to 2 p.m.

Agenda: Program reports and presentations; Business of the Board.

Place: National Cancer Institute, 9000 Rockville Pike, Building 31, C Wing, 6th Floor, Conference Room 10, Bethesda, MD 20892.

Contact: Dr. Paulette S. Gray, Acting Executive Secretary, National Cancer Institute, National Institutes of Health, 6116 Executive Boulevard, 8th Floor, Room 8141, Bethesda, MD 20892, (301) 496–4218.

Name of Committee: National Cancer Advisory Board, Subcommittee on Planning and Budget.

Open: June 10, 2003, 2 p.m. to 2:45 p.m.

Agenda: Bypass Budget Update.

Place: National Cancer Institute, 9000 Rockville Pike, Building 31, C Wing, 6th Floor, Conference Room 10, Bethesda, MD 20892.

Contact Person: Ms. Cherie Nichols, Executive Secretary, Subcommittee on Planning and Budget, National Cancer Institute, National Institutes of Health, 9000 Rockville Pike, Building 31, Room 11A03, Bethesda, MD 20892, (301) 496–5515.

Name of Committee: National Cancer Advisory Board.

Open: June 10, 2003, 2:45 p.m. to 4:25 p.m.

Agenda: Program reports and presentations; Business of the Board.

Place: National Cancer Institute, 9000 Rockville Pike, Building 31, C Wing, 6th Floor, Conference Room 10, Bethesda, MD 20892.

Contact Person: Dr. Paulette S. Gray, Acting Executive Secretary, National Cancer Institute, National Institutes of Health, 6116 Executive Boulevard, 8th Floor, room 8141, Bethesda, MD 20892, (301) 496–4218.

Name of Committee: National Cancer Advisory Board,

Closed: June 10, 2003, 4:25 p.m. to Adjournment.

Agenda: Review of grant applications.

Contact Person: Dr. Paulette S. Gray, Acting Executive Secretary, National Cancer Institute, National Institutes of Health, 6116 Executive Boulevard, 8th Floor, Room 8141, Bethesda, MD 20892, (301) 496–4218.

Any interested person may file written comments with the committee by forwarding the statement to the Contact Person listed on this notice. The statement should include the name, address, telephone number and when applicable, the business or professional affiliation of the interested person.

In the interest of security, NIH has instituted stringent procedures for entrance into the building by non-government employees. Persons without a government I.D. will need to show a photo I.D. and sign-in at the security desk upon entering the building.

Information is also available on the Institute's/Center's home page: *http://deainfo.nci.nih.gov/advisory/ncab.htm,* where an agenda and any additional information for the meeting will be posted when available.

(Catalogue of Federal Domestic Assistance Program Nos. 93.392, Cancer Construction; 93.393, Cancer Cause and Prevention Research; 93.394, Cancer Detection and Diagnosis Research; 93.395, Cancer Treatment Research; 93.396. Cancer Biology Research; 93.397, Cancer Centers Support, 93.398, Cancer Research Manpower; 93.399, Cancer Control, National Institutes of Health, HHS)

Dated: May 8, 2003.

Anna P. Snouffer,

Acting Director, Office of Federal Advisory Committee Policy.

[FR Doc. 03–12074 Filed 5–14–03; 8:45 am]

BILLING CODE 4140–01–M

DEPARTMENT OF HEALTH AND HUMAN SERVICES

National Institutes of Health

National Cancer Institute; Notice of Closed Meeting

Pursuant to section 10(d) of the Federal Advisory Committee Act, as amended (5 U.S.C. Appendix 2), notice is hereby given of the following meeting.

The meeting will be closed to the public in accordance with the provisions set forth in sections 552b(c)(4) and 552b(c)(6), Title 5 U.S.C., as amended. The grant applications and the discussions could disclose confidential trade secrets or commercial property such as patentable material, and personal information concerning individuals associated with the grant applications, the disclosure of which would constitute a clearly unwarranted invasion of personal privacy.

Name of Committee: National Cancer Institute Initial Review Group, Subcommittee I—Career Development.

Date: June 11–13, 2003.

Time: 6:30 p.m. to 12 p.m.

Agenda: To review and evaluate grant applications.

Place: Holiday Inn Georgetown, 2101 Wisconsin Avenue, NW., Washington, DC 20007.

Contact Person: Robert Bird, PhD, Scientific Review Administrator, Resources and Training Review Branch, National Cancer Institute, National Institutes of Health, Room 8113, 6116 Executive Blvd, MSC 8328, Bethesda, MD 20892–8328, 301–496–7978, *bird@mail.nih.gov.*

(Catalogue of Federal Domestic Assistance Program Nos. 93.392, Cancer Construction; 93.393, Cancer Cause and Prevention Research; 93.394, Cancer Detection and Diagnosis Research; 93.395, Cancer Treatment Research; 93.396, Cancer Biology Research; 93.397, Cancer Centers Support; 93.398, Cancer Research Manpower; 93.399, Cancer Control, National Institutes of Health, HHS).

Dated: May 8, 2003.

Anna P. Snouffer,

Acting Director, Office of Federal Advisory Committee Policy.

[FR Doc. 03–12075 Filed 5–14–03; 8:45 am]

BILLING CODE 4140–01–M

DEPARTMENT OF HEALTH AND HUMAN SERVICES

National Institutes of Health

National Cancer Institute; Notice of Closed Meeting

Pursuant to section 10(d) of the Federal Advisory Committee Act, as amended (5 U.S.C. Appendix 2), notice is hereby given of the following meeting.

The meeting will be closed to the public in accordance with the provisions set forth in sections 552b(c)(4) and 552b(c)(6), Title 5 U.S.C., as amended. The grant applications and the discussions could disclose confidential trade secrets or commercial property such as patentable material, and personal information concerning individuals associated with the grant applications, the disclosure of which would constitute a clearly unwarranted invasion of personal privacy.

Name of Committee: National Cancer Institute Initial Review Group, Subcommittee F—Manpower & Training.

Date: June 11–13, 2003.

Time: 6:30 pm to 5 pm.

Agenda: To review and evaluate grant applications.

Place: Holiday Inn Georgetown, 2101 Wisconsin Avenue, NW., Washington, DC 20007.

Contact Person: Lynn M. Amende, PhD, Scientific Review Administrator, Resources and Training Review Branch, Division of Extramural Activities, National Cancer Institute, National Institutes of Health, 6116 Executive Boulevard Room 8105, Bethesda, MD 20892, 301–451–4759, *amendel@mail.nih.gov.*

(Catalogue of Federal Domestic Assistance Program Nos. 93.392, Cancer Construction; 93.393, Cancer Cause and Prevention Research; 93.394, Cancer Detection and Diagnosis Research; 93.395, Cancer Treatment Research; 93.396, Cancer Biology Research; 93.397, Cancer Centers Support; 93.398, Cancer Research Manpower; 93.399, Cancer Control, National Institutes of Health, HHS)

Dated: May 8, 2003.

Anna P. Snouffer,

Acting Director, Office of Federal Advisory Committee Policy.

[FR Doc. 03–12076 Filed 5–14–03; 8:45 am]

BILLING CODE 4140–01–M

DEPARTMENT OF HEALTH AND HUMAN SERVICES

National Institutes of Health

National Cancer Institute; Notice of Closed Meeting

Pursuant to section 10(d) of the Federal Advisory Committee Act, as amended (5 U.S.C. Appendix 2), notice is hereby given of the following meeting.

The meeting will be closed to the public in accordance with the provisions set forth in sections 552b(c)(4) and 552b(c)(6), Title 5 U.S.C., as amended. The grant applications and the discussions could disclose confidential trade secrets or commercial property such as patentable material, and personal information concerning individuals associated with the grant applications, the disclosure of which would constitute a clearly unwarranted invasion of personal privacy.

Name of Committee: National Cancer Institute Special Emphasis Panel, Therapy of CML.

Date: June 16–18, 2003.

Time: 7 p.m. to 11 a.m.

Agenda: To review and evaluate grant applications.

Place: Hilton Houston Plaza, 6633 Travis Street, Houston, TX 77030.

Contact Person: Claudio A. Dansky Ullmann, MD, Scientific Review Administrator, National Cancer Institute, Division of Extramural Activities, Grants Review Branch, Research Programs Review Branch, 6116 Executive Blvd., Rm 8119, MSC 8328, Bethesda, MD 20892, 301–451–4761, *ullmannc@mail.nih.gov.*

(Catalogue of Federal Domestic Assistance Program Nos. 93.392, Cancer Construction; 93.393, Cancer Cause and Prevention Research; 93.394, Cancer Detection and Diagnosis Research; 93.395, Cancer Treatment Research; 93,396, Cancer Biology Research; 93.397, Cancer Centers Support; 93.398, Cancer Research Manpower; 93.399, Cancer Control, National Institutes of Health, HHS)

Dated: May 8, 2003.

Anna P. Snouffer,

Acting Director, Office of Federal Advisory Committee Policy.

[FR Doc. 03–12093 Filed 5–14–03; 8:45 am]

BILLING CODE 4140–01–M

DEPARTMENT OF HEALTH AND HUMAN SERVICES

National Institutes of Health

National Center for Research Resources; Notice of Closed Meetings

Pursuant to section 10(d) of the Federal Advisory Committee Act, as amended (5 U.S.C. appendix 2), notice is hereby given of the following meetings.

The meetings will be closed to the public in accordance with the provisions set forth in sections 552b(c)(4) and 552b(c)(6), Title 5 U.S.C., as amended. The grant applications and the discussions could disclose confidential trade secrets or commercial

property such as patentable material, and pesonal information concerning individuals associated with the grant applications, the disclosure of which would constitute a clearly unwarranted invasion of personal privacy.

Name of Committee: National Center for Research Resources Special Emphasis Panel, Research Infrastructure.

Date: June 17–18, 2003.

Time: June 17, 2003, 8 a.m. to Adjournment.

Agenda: To review and evaluate grant applications.

Place: Hyatt Regency Bethesda, One Bethesda Metro Center, Bethesda, MD 20814.

Contact Person: Bo Hong, PhD, Scientific Review Administrator, National Institutes of Health, National Center for Research Resources, Office of Review, 6701 Democracy Boulevard, 1 Democracy Plaza, Room 1078, Bethesda, MD 20817, (301) 435–0813, *hongb@mail.nih.gov.*

Name of Committee: National Center for Research Resources Special Emphasis Panel, Research Infrastructure.

Date: June 30–July 1, 2003.

Time: June 30, 2003, 8 a.m. to Adjournment.

Agenda: To review and evaluate grant applications.

Place: Residence Inn Bethesda, 7335 Wisconsin Avenue, Bethesda, MD 20814.

Contact Person: Marc Rigas, PhD, Scientific Review Administrator, National Institutes of Health, National Center for Research Resources, Office of Review, 6701 Democracy Boulevard, 1 Democracy Plaza, Room 1080, Bethesda, MD 20817–4814, 301 435–0806, *rigasm@mail.nih.gov.*

Name of Committee: National Center for Research Resources Special Emphasis Panel, Science Education Partnership Award Special Emphasis Panel.

Date: July 15–16, 2003.

Time: July 15, 2003, 8 a.m. to Adjournment.

Agenda: To review and evaluate grant applications.

Place: Bethesda Marriott Suites, 6711 Democracy Boulevard, Bethesda, MD 20817.

Contact Person: John L. Meyer, PhD, Scientific Review Administrator, Office of Review, National Center For Research Resources, National Institutes of Health, 6701 Democracy Boulevard, 1 Democracy Plaza, Bethesda, MD 20817, 301–435–0807, *meyerj@ncrr.nih.gov.*

(Catalogue of Federal Domestic Assistance Program Nos. 93.306, Comparative Medicine; 93.333, Clinical Research; 93.371, Biomedical Technology; 93.389, Research Infrastructure, 93.306, 93.333, National Institutes of Health, HHS)

Dated: May 8, 2003.

Anna P. Snouffer,

Deputy Director, Office of Federal Advisory Committee Policy.

[FR Doc. 03–12082 Filed 5–14–03; 8:45 am]

BILLING CODE 4140–01–M

DEPARTMENT OF HEALTH AND HUMAN SERVICES

National Institutes of Health

National Center for Research Resources; Notice of Meeting

Pursuant to section 10(d) of the Federal Advisory Committee Act, as amended (5 U.S.C. Appendix 2), notice is hereby given of the following meeting.

The meetings will be open to the public as indicated below, with attendance limited to space available. Individuals who plan to attend and need special assistance, such as sign language interpretation or other reasonable accommodations, should notify the Contact Person listed below in advance of the meeting.

The meeting will be closed to the public in accordance with the provisions set forth in sections 552b(c)(4) and 552b(c)(6), Title 5 U.S.C., as amended. The grant applications and the discussions could disclose confidential trade secrets or commercial property such as patentable material, and personal information concerning individuals associated with the grant applications, the disclosure of which would constitute a clearly unwarranted invasion of personal privacy.

Name of Committee: Scientific and Technical Review Board on Biomedical and Behavorial Research Facilities.

Date: May 27–29, 2003.

Open: May 27, 2003, 8 a.m. to 9 a.m.

Agenda: To discuss program planning and other issues.

Place: Residence Inn Bethesda, 7335 Wisconsin Avenue, Bethesda, MD 20814.

Closed: May 27, 2003, 9 a.m. to Adjournment.

Agenda: To review and evaluate grant applications.

Place: Residence Inn Bethesda, 7335 Wisconsin Avenue, Bethesda, MD 20814.

Contact Person: D.G. Patel, PhD, Scientific Review Administrator, National Institutes of Health, National Center for Research Resources, Office of Review, 6701 Democracy, Room 1070, MSC–4874, Bethesda, MD 20892, 301–435–0824, *pateldag@mail.nih.gov*

Name of Committee: National Center for Research Resources Initial Review Group/ Clinical Research Review Committee.

Date: June 4–5, 2003.

Open: June 4, 2003, 8 a.m. to 9 a.m.

Agenda: To discuss program planning and other issues.

Place: Holiday Inn Bethesda, 8120 Wisconsin Avenue, Bethesda, MD 20814.

Closed: June 4, 2003, 9 a.m. to Adjournment.

Agenda: To review and evaluate grant applications.

Place: Holiday Inn Bethesda, 8120 Wisconsin Avenue, Bethesda, MD 20814.

Contact Person: Sheryl K. Brining, PhD., Acting Director, Office of Review, National Center for Research Resources, National Institutes of Health, 6701 Democracy Boulevard, 1 Democracy Plaza, Room 1074, Bethesda, MD 20817, 301–435–0809, *sb44k@nih.gov.*

Name of Committee: National Center for Research Resources Initial Review Group Comparative Medicine Review Committee.

Date: June 10–11, 2003.

Open: June 10, 2003, 8 a.m. to 8:30 a.m.

Agenda: To discuss program planning and other issues.

Place: Bethesda Marriott Suites, 6711 Democracy Boulevard, Bethesda, MD 20817.

Closed: June 10, 2003, 8:30 a.m. to Adjournment.

Agenda: To review and evaluate grant applications.

Place: Bethesda Marriott Suites, 6711 Democracy Boulevard, Bethesda, MD 20817.

Contact Person: Guo Zhang, MPH, MD, PhD, Scientific Review Administrator, Office of Review, National Center for Research Resources, National Institutes of Health, One Democracy Plaza, 6701 Democracy Blvd., Room WS–1064, 10th Floor, Bethesda, MD 20814–9692, (301) 435–0812, *zhanggu@mail.nih.gov.*

Name of Committee: National Center for Research Resources Initial Review Group, Research Centers In Minority Institutions Review Committee.

Date: July 7–8, 2003.

Open: July 7, 2003, 8 a.m. to 9 a.m.

Agenda: Grant applications.

Place: Gaithersburg Marriott Washingtonian Center, 9751 Washingtonian Boulevard, Gaithersburg, MD 20878.

Closed: July 7, 2003, 9 a.m. to Adjournment.

Agenda: To review and evaluate grant applications.

Place: Gaithersburg Marriott Washingtonian Center, 9751 Washingtonian Boulevard, Gaithersburg, MD 20878.

Contact Person: Eric H. Brown, PhD, Scientific Review Administrator, Office of Review, National Center for Research Resources, National Institutes of Health, 6701 Democracy Boulevard, 1 Democracy Plaza, Room 1068, Bethesda, MD 20817, (301) 435–0815, *browne@ncrr.nih.gov.*

(Catalogue of Federal Domestic Assistance Program Nos. 93.306, Comparative Medicine; 93.333, Clinical Research; 93.371, Biomedical Technology; 93.389, Research Infrastructure, 93.306, 93.333, National Institutes of Health, HHS)

Dated: May 8, 2003.

Anna P. Snouffer,

Deputy Director, Office of Federal Advisory Committee Policy.

[FR Doc. 03–12087 Filed 5–14–03; 8:45 am]

BILLING CODE 4140–01–M

DEPARTMENT OF HEALTH AND HUMAN SERVICES

National Institutes of Health

National Center for Complementary and Alternative Medicine; Notice of Closed Meetings

Pursuant to section 10(d) of the Federal Advisory Committee Act, as amended (5 U.S.C. Appendix 2), notice is hereby given of the following meetings.

The meetings will be closed to the public in accordance with the provisions set forth in sections 552b(c)(4) and 552b(c)(6), Title 5 U.S.C., as amended. The grant applications and the discussions could disclose confidential trade secrets or commercial property such as patentable material, and personal information concerning individuals associated with the grant applications, the disclosure of which would constitute a clearly unwarranted invasion of personal privacy.

Name of Committee: National Center for Complementary and Alternative Medicine Special Emphasis Panel; Clinical Science.
Date: June 5–6, 2003.
Time: 8 a.m. to 5 p.m.
Agenda: To review and evaluate grant applications.
Place: Bethesda Marriott Suites, 6711 Democracy Boulevard, Bethesda, MD 20817.
Contact Person: William A. Kachadorian, PhD, MTS, Scientific Review Administrator, Office of Scientific Review, National Center for Complementary and Alternative Medicine, 6707 Democracy Blvd., Ste. 106, Bethesda, MD 20892–5475, (301) 594–2014, *kachadow@mail.nih.gov.*

Name of Committee: National Center for Complementary and Alternative Medicine Special Emphasis Panel; Oncology Application Review.
Date: June 9–10, 2003.
Time: 8 a.m. to 5 p.m.
Agenda: To review and evaluate grant applications.
Place: Bethesda Marriott, 5151 Pooks Hills Road, Bethesda, MD 20814.
Contact Person: Carol Pontzer, PhD, Scientific Review Administrator, National Center for Complementary and Alternative Medicine, 6707 Democracy Blvd., Bethesda, MD 20892.

Name of Committee: National Center for Complementary and Alternative Medicine Special Emphasis Panel; Basic Science Application Review.
Date: June 12–13, 2003.
Time: 7 p.m. to 5 p.m.
Agenda: To review and evaluate grant applications.
Place: Bethesda Marriott Suites, 6711 Democracy Boulevard, Bethesda, MD 20817.
Contact Person: Dale Birkle, PhD, Scientific Review Administrator, NIH/NCCAM, 6707 Democracy Blvd, Democracy Two Building, Suite 401, Bethesda, MD 20892, (301) 451–6570, *birkled@mail.nih.gov.*

Name of Committee: National Center for Complementary and Alternative Medicine Special Emphasis Panel; Training/Education Application Review.
Date: June 25, 2003.
Time: 8 a.m. to 5 p.m.
Agenda: To review and evaluate grant applications.
Place: Bethesda Marriott Suites, 6711 Democracy Boulevard, Bethesda, MD 20817.
Contact Person: Carol Pontzer, PhD, Scientific Review Administrator, National Center for Complementary and Alternative Medicine, 6707 Democracy Blvd., Bethesda, MD 20892.

Dated: May 7, 2003.

Ann P. Snouffer,

Deputy Director, Office of Federal Advisory Committee Policy.

[FR Doc. 03–12097 Filed 5–14–03; 8:45 am]

BILLING CODE 4140–01–M

DEPARTMENT OF HEALTH AND HUMAN SERVICES

National Institutes of Health

National Center for Complementary and Alternative Medicine; Notice of Meeting

Pursuant to section 10(d) of the Federal Advisory Committee Act, as amended (5 U.S.C. Appendix 2), notice is hereby given of the National Advisory Council for Complementary and Alternative Medicine (NACCAM) meeting.

The meeting will be open to the public as indicated below, with attendance limited to space available. Individuals who plan to attend and need special assistance, such as sign language interpretation or other reasonable accommodations, should notify the Contact Person listed below in advance of the meeting.

A portion of the meeting will be closed to the public in accordance with the provisions set forth in sections 552b(c)(4) and 552b(c)(6), Title 5 U.S.C., as amended. The grant applications and/or contract proposals and the discussion could disclose confidential trade secrets or commercial property such as patentable material, and personal information concerning individuals associated with the grant applications and/or contract proposals, the disclosure of which would constitute a clearly unwarranted invasion of personal privacy.

Name of Committee: National Advisory Council for Complementary and Alternative Medicine.
Date: June 2, 2003.
Closed: 8:30 a.m. to 12 p.m.
Agenda: To review and evaluate grant applications and/or proposals.
Open: 1 p.m. to adjournment.
Agenda: The agenda includes Opening Remarks by Director, NCCAM, Overview of Activities at the Food and Drug Administration, report on the Working Group on Cancer, Focus Groups on Cancer and other business in the Council.
Place: Neurosicence Conference Center, 6001 Executive Boulevard, Conference Rooms C and D, Rockville, MD 20852.
Contact Person: Jane F. Kinsel, Ph.D., M.B.A., Executive Secretary, National Center for Complementary and Alternative Medicine, National Institutes of Health, 6707 Democracy Blvd., Suite 401, Bethesda, MD 20892, (301) 496–6701.

The public comments session is scheduled from 4:45–5:15 p.m. Each speaker will be permitted 5 minutes for their presentation. Interested individuals and representatives of organizations are requested to notify Dr. Jane Kinsel, National Center for Complementary and Alternative Medicine, NIH, 6707 Democracy Boulevard, Suite 401, Bethesda, Maryland, 20892, (301) 496–6701, Fax: (301) 480–0087. Letters of intent to present comments, along with a brief description of the organization represented, should be received no later than 5 p.m. on May 23, 2003. Only one representative of an organization may present oral comments. Any person attending the meeting who does not request an opportunity to speak in advance of the meeting may be considered for oral presentation, if time permits, and at the discretion of the Chairperson. In addition, written comments may be submitted to Dr. Jane Kinsel at the address listed above up to ten calendar days (June 12, 2003) following the meeting.

Copies of the meeting agenda and the roster of members will be furnished upon request by contacting Dr. Jane Kinsel, Executive Secretary, NACCAM, National Institutes of Health, 6707 Democracy Boulevard, Suite 401, Bethesda, Maryland 20892, (301) 496–6701, Fax (301) 480–0087, or via e-mail at *naccames@mail.nih.gov.*

Dated: May 7, 2003.

Anna P. Snouffer,

Deputy Director, Office of Federal Advisory Committee Policy, NIH.

[FR Doc. 03–12098 Filed 5–14–03; 8:45 am]

BILLING CODE 4140–01–M

DEPARTMENT OF HEALTH AND HUMAN SERVICES

National Institutes of Health

National Center for Research Resources; Notice of Closed Meetings

Pursuant to section 10(d) of the Federal AdvisorY Committee Act, as amended (5 U.S.C. Appendix 2), notice is hereby given of the following meetings.

The meetings will be closed to the public in accordance with the provisions set forth in sections 552b(c)(4) and 552b(c)(6), Title 5 U.S.C., as amended. The grant applications and the discussions could disclose

confidential trade secrets or commerical property such as patentable material, and personal information concerning individuals associated with the grant applications, the disclosure of which would constitute a clearly unwarranted invasion of personal privacy.

Name of Committee: National Center for Research Resources Special Emphasis Panel; Scientific and Technical Review Board on Biomedical and Behavioral Research Facilities.

Date: May 14, 2003.

Time: 2 p.m. to adjournment.

Agenda: To review and evaluate grant applications.

Place: One Democracy Boulevard, 6701 Democracy Boulevard, Bethesda, MD 20817, (Telephone Conference Call).

Contact Person: D.G. Patel, PhD, Scientific Review Administator, National Institutes of Health, National Center For Research Resources, Office of Review, 6701 Democracy Boulevard, 1 Democracy Plaza, Room 1070, Bethesda, MD 20892, 301–435–0824, *pateldg@mail.nih.gov.*

This notice is being publlished less than 15 days prior to the meeting due to the timing limitations imposed by the review and funding cycle.

Name of Committee: National Center for Research Resources Special Emphasis Panel, Research Infrastructure.

Date: May 22–23, 2003.

Time: May 22, 2003, 8 a.m. to adjournment.

Agenda: To review and evaluate grant applications.

Place: Hyatt Regency Bethesda, One Bethesda Metro Center, 7400 Wisconsin Avenue, Bethesda, MD 20814.

Contact Person: Guo Zhang, PhD, MPH, Scientific Review Administrator, Office of Review, National Center for Research Resources, National Institutes of Health, 6701 Democracy Boulevard, 1 Democracy Plaza, Room 1064, Bethesda, MD 20814–9692, 301–435–0812, *zhanggu@mail.nih.gov.*

This notice is being published less than 15 days prior to the meeting due to the timing limitations imposed by the review and funding cycle.

Name of Committee: National Center for Research Resources Special Emphasis Panel; Research Infrastructure.

Date: May 28–29, 2003.

Time: May 28, 2003, 8 a.m. to adjournment.

Agenda: To review and evaluate grant applications.

Place: Hyatt Regency Bethesda, One Bethesda Metro Center, 7400 Wisconsin Avenue, Bethesda, MD 20814.

Contact Person: Carol Lambert, PhD, Scientific Review Administrator, Office of Review, National Center for Research Resources, National Institutes of Health, 6701 Democracy Boulevard, 1 Democracy Plaza, Room 1076, Bethesda, MD 20892–4874, 301–435–0814, *lambert@mail.nih.gov.*

Name of Committee: National Center for Research Resources Special Emphasis Panel; Clinical Research

Date: June 5, 2003.

Time: 10:30 a.m. to adjournment.

Agenda: To review and evaluate grant applications.

Place: Holiday Inn Bethesda, 8120 Wisconsin Avenue, Bethesda, MD 20814.

Contact Person: Mohan Viswanathan, PhD, Scientific Review Administrator, National Center for Research Resources, National Institutes of Health, Office of Review, 6701 Democracy Boulevard, 1 Democracy Plaza, Room 1084, Bethesda, MD 20892, 301–435–0829, *viswanathanm@ncrr.nih.gov.*

(Catalogue of Federal Domestic Assistance Program Nos. 93.306, Comparative Medicine; 93.333, Clinical Research; 93.371, Biomedical Technology; 93.389, Research Infrastructure, 93.306, 93.333, National Institutes of Health, HHS)

Dated: May 7, 2003.

Anna P. Snouffer,

Deputy Director, Office of Federal Advisory Committee Policy.

[FR Doc. 03–12099 Filed 5–14–03; 8:45 am]

BILLING CODE 4140–01–M

DEPARTMENT OF HEALTH AND HUMAN SERVICES

National Institutes of Health

National Heart, Lung, and Blood Institute; Notice of Closed Meeting

Pursuant to section 10(d) of the Federal Advisory Committee Act, as amended (5 U.S.C. Appendix 2), notice is hereby given of the following meeting.

The meeting will be closed to the public in accordance with the provisions set forth in sections 552b(c)(4) and 552b(c)(6), Title 5 U.S.C., as amended. The grant applications and the discussions could disclose confidential trade secrets or commercial property such as patentable material, and personal information concerning individuals associated with the grant applications, the disclosure of which would constitute a clearly unwarranted invasion of personal privacy.

Name of Committee: National Heart, Lung, and Blood Institute Special Emphasis Panel, Minority K–12 Mentored Clinical Scientist Development Program Award.

Date: May 21, 2003.

Time: 8 a.m. to 4 p.m.

Agenda: To review and evaluate grant applications.

Place: Bethesda Marriott Suites, 6711 Democracy Boulevard, Bethesda, MD 20817.

Contact Person: Chitra Krishnamurti PhD, Scientific Review Administrator, Review Branch, Room 7206, Division of Extramural Affairs, National Heart, Lung, and Blood Institute, National Institutes of Health, 6701 Rockledge Drive, MSC 7924, Bethesda, MD 20892.

This notice is being published less than 15 days prior to the meeting due to the timing limitations imposed by the review and funding cycle.

(Catalogue of Federal Domestic Assistance Program Nos. 93.233, National Center for Sleep Disorders Research; 93.837, Heart and Vascular Diseases Research; 93.838, Lung Diseases Research; 93.839, Blood Diseases and Resources Research, National Institutes of Health, HHS)

Dated: May 7, 2003.

Anna P. Snouffer,

Acting Director, Office of Federal Advisory Committee Policy.

[FR Doc. 03–12079 Filed 5–14–03; 8:45 am]

BILLING CODE 4140–01–M

DEPARTMENT OF HEALTH AND HUMAN SERVICES

National Institutes of Health

National Heart, Lung, and Blood Institute; Notice of Closed Meeting

Pursuant to section 10(d) of the Federal Advisory Committee Act, as amended (5 U.S.C. Appendix 2), notice is hereby given of the following meeting.

The meeting will be closed to the public in accordance with the provisions set forth in sections 552b(c)(4) and 552b(c)(6), Title 5 U.S.C., as amended. The grant applications and the discussions could disclose confidential trade secrets or commercial property such as patentable material, and personal information concerning individuals associated with the grant applications, the disclosure of which would constitute a clearly unwarranted invasion of personal privacy.

Name of Committee: National Heart, Lung, and Blood Institute Special Emphasis Panel, Non Human Primate Models of HIV-Associated Pulmonary, Cardiovascular and, Hematological Disorders.

Date: July 10, 2003.

Time: 8 a.m. to 2 p.m.

Agenda: To review and evaluate grant applications.

Place: Bethesda Marriott, 5151 Pooks Hill Road, Bethesda, MD 20814.

Contact Person: Zoe Huang, MD, Health Scientist Administrator, Review Branch, Room 7190, Division of Extramural Affairs, National Heart, Lung, and Blood Institute, National Institutes of Health, 6701 Rockledge Drive, MSC 7924, Bethesda, MD 20892–7924, 301–435–0314.

(Catalogue of Federal Domestic Assistance Program Nos. 93.233, National Center for Sleep Disorders Research; 93.837, Heart and Vascular Diseases Research; 93.838, Lung Diseases Research; 93.839, Blood Diseases and Resources Research, National Institutes of Health, HHS)

Dated: May 8, 2003.

Anna P. Snouffer,

Acting Director, Office of Federal Advisory Committee Policy.

[FR Doc. 03–12090 Filed 5–14–03; 8:45 am]

BILLING CODE 4140–01–M

DEPARTMENT OF HEALTH AND HUMAN SERVICES

National Institutes of Health

National Heart, Lung, and Blood Institute; Notice of Closed Meeting

Pursuant to section 10(d) of the Federal Advisory Committee Act, as amended (5 U.S.C. Appendix 2), notice is hereby given of the following meeting.

The meeting will be closed to the public in accordance with the provisions set forth in sections 552b(c)(4) and 552b(c)(6), Title 5 U.S.C., as amended. The grant applications and the discussions could disclose confidential trade secrets or commercial property such as patentable material, and personal information concerning individuals associated with the grant applications, the disclosure of which would constitute a clearly unwarranted invasion of personal privacy.

Name of Committee: National Heart, Lung, and Blood Institute Special Emphasis Panel, Viability and Remodeling.

Date: June 9, 2003.

Time: 10 a.m. to 12 p.m.

Agenda: To review and evaluate grant applications.

Place: Hilton Crystal City, 2399 Jefferson Davis Hwy, Arlington, VA 22202.

Contact Person: Anne P. Clark, PhD, Chief, Review Branch, Review Branch, Division of Extramural Affairs, National Heart, Lung, and Blood Institute, NIH, Rockledge II, Room 7214, 6701 Rockledge Drive, Bethesda, MD 20892, (301) 435–0270.

(Catalogue of Federal Domestic Assistance Program Nos. 93.233, National Center for Sleep Disorders Research; 93.837, Heart and Vascular Diseases Research; 93.838, Lung Diseases Research; 93.839, Blood Diseases and Resources Research, National Institutes of Health, HHS)

Dated: May 7, 2003.

Anna P. Snouffer,

Acting Director, Office of Federal Advisory Committee Policy.

[FR Doc. 03–12092 Filed 5–14–03; 8:45 am]

BILLING CODE 4140–01–M

DEPARTMENT OF HEALTH AND HUMAN SERVICES

National Institutes of Health

National Heart, Lung, and Blood Institute; Notice of Closed Meeting

Pursuant to section 10(d) of the Federal Advisory Committee Act, as amended (5 U.S.C. Appendix 2), notice is hereby given of the following meeting.

The meeting will be closed to the public in accordance with the provisions set forth in sections 552b(c)(4) and 552b(c)(6), Title 5 U.S.C., as amended. The grant applications and the discussions could disclose confidential trade secrets or commercial property such as patentable material, and personal information concerning individuals associated with the grant applications, the disclosure of which would constitute a clearly unwarranted invasion of personal privacy.

Name of Committee: National Heart, Lung, and Blood Institute Special Emphasis Panel, Summer Institute for Training in Biostatistics (SIBS) (Review of T–15s).

Date: June 3, 2003.

Time: 8 a.m. to 5 p.m.

Agenda: To review and evaluate grant applications.

Place: Bethesda Marriott Suites, 6711 Democracy Boulevard, Bethesda, MD 20817.

Contact Person: Chitra Krishnamurti, PhD, Scientific Review Administrator, Review Branch, Room 7206, Division of Extramural Affairs, National Heart Lung, and Blood Institute, National Institutes of Health, 6701 Rockledge Drive, MSC 7924, Bethesda, MD 20892.

(Catalogue of Federal Domestic Assistance Program Nos. 93.233, National Center for Sleep Disorders Research; 93.837, Heart and Vascular Diseases Research; 93.838, Lung Diseases Research; 93.839, Blood Diseases and Resources Research, National Institutes of Health, HHS)

Dated: May 7, 2003.

Anna P. Snouffer,

Acting Director, Office of Federal Advisory Committee Policy.

[FR Doc. 03–12095 Filed 5–14–03; 8:45 am]

BILLING CODE 4140–01–M

DEPARTMENT OF HEALTH AND HUMAN SERVICES

National Institutes of Health

National Institute of Allergy and Infectious Diseases; Notice of Closed Meeting

Pursuant to section 10(d) of the Federal Advisory Committee Act, as amended (5 U.S.C. Appendix 2), notice is hereby given of a meeting of the Board of Scientific Counselors, NIAID.

The meeting will be closed to the public as indicated below in accordance with the provisions set forth in section 552b(c)(6), Title 5 U.S.C., as amended for the review, discussion, and evaluation of individual intramural programs and projects conducted by the National Institute of Allergy and Infectious Diseases, including consideration of personnel qualifications and performance, and the competence of individual investigators, the disclosure of which would constitute a clearly unwarranted invasion of personal privacy.

Name of Committee: Board of Scientific Counselors, NIAID.

Date: June 9–10, 2003.

Time: June 9, 2003, 8 AM to 7 PM.

Agenda: To review and evaluate personal qualifications and performance, and competence of individual investigators.

Place: National Institutes of Health, Building 10, 10 Center Drive, Wolff Memorial Conference Room, Bethesda, MD 20892.

Time: June 10, 2003, 8 AM to 12:30 PM.

Agenda: To review and evaluate personal qualifications and performance, and competence of individual investigators.

Place: National Institutes of Health, Building 10, 10 Center Drive, Wolff Memorial Conference Room, Bethesda, MD 20892.

Contact Person: Thomas J. Kindt, PhD, Director, Division of Intramural Research, National Institute of Allergy and Infectious Diseases, Building 10, Room 4A31, Bethesda, MD 20892, 301 496–3006, *tk9c@nih.gov.*

In the interest of security, NIH has instituted stringent procedures for entrance into the building by non-government employees. Persons without a government I.D. will need to show a photo I.D. and sign-in at the security desk upon entering the building.

(Catalogue of Federal Domestic Assistance Program Nos. 93.855, Allergy, Immunology, and Transplantation Research; 93.856, Microbiology and Infectious Diseases Research, National Institutes of Health, HHS)

Dated: May 8, 2003.

Anna P. Snouffer,

Deputy Director, Office of Federal Advisory Committee Policy.

[FR Doc. 03–12073 Filed 5–14–03; 8:45 am]

BILLING CODE 4140–01–M

DEPARTMENT OF HEALTH AND HUMAN SERVICES

National Institutes of Health

National Institute on Deafness and Other Communication Disorders; Notice of Closed Meetings

Pursuant to section 10(d) of the Federal Advisory Committee Act, as amended (5 U.S.C. Appendix 2), notice

is hereby given of the following meetings.

The meetings will be closed to the public in accordance with the provisions set forth in sections 552b(c)(4), and 552b(c)(6), Title 5 U.S.C., as amended. The grant applications and the discussions could disclose confidential trade secrets or commercial property such as patentable material, and personal information concerning individuals associated with the grant applications, the disclosure of which would constitute a clearly unwarranted invasion of personal privacy.

Name of Committee: Communication Disorders Review Committee.

Date: June 11–12, 2003.

Time: June 11, 2003, 8 a.m. to 5 p.m.

Agenda: To review and evaluate grant applications.

Place: Wyndham Washington, DC, 1400 M Street, NW., Washington, DC 20005.

Time: June 12, 2003, 8 a.m. to 4 p.m.

Agenda: To review and evaluate grant applications.

Place: Wyndham Washington, DC, 1400 M Street, NW., Washington, DC 20005.

Contact Person: Melissa J. Stick, PhD., MPH, Scientific Review Administrator, Scientific Review Branch, Division of Extramural Research, NIDCD/NIH, 6120 Executive Blvd., Bethesda, MD 20892, 301–496–8683.

Name of Committee: Communication Disorders Review Committee, Loan Repayment Review.

Date: June 12, 2003.

Time: 4 p.m. to 5 p.m.

Agenda: To review and evaluate grant applications.

Place: Wyndham Washington, DC, 1400 M Street, NW., Washington, DC 20005.

Contact Person: Melissa J. Stick, PhD., MPH, Scientific Review Administrator, Scientific Review Branch, Division of Extramural Research, NIDCD/NIH, 6120 Executive Blvd., Bethesda, MD 20892, 301–496–8683.

(Catalogue of Federal Domestic Assistance Program Nos. 93.173, Biological Research Related to Deafness and Communicative Disorders, National Institutes of Health, HHS)

Dated: May 7, 2003.

Anna P. Snouffer,

Acting Director, Office of Federal Advisory Committee Policy.

[FR Doc. 03–12077 Filed 5–14–03; 8:45 am]

BILLING CODE 4140–01–M

DEPARTMENT OF HEALTH AND HUMAN SERVICES

National Institutes of Health

National Institute on Deafness and Other Communication Disorders; Notice of Closed Meetings

Pursuant to section 10(d) of the Federal Advisory Committee Act, as amended (5 U.S.C. Appendix 2), notice is hereby given of the following meetings.

The meetings will be closed to the public in accordance with the provisions set forth in sections 552b(c)(4) and 552b(c)(6), Title 5 U.S.C., as amended. The grant applications and the discussions could disclose confidential trade secrets or commercial property such as patentable material, and personal information concerning individuals associated with the grant applications, the disclosure of which would constitute a clearly unwarranted invasion of personal privacy.

Name of Committee: National Institute on Deafness and Other Communications Disorders Special Emphasis Panel; NIDCD Training Grants.

Date: June 18, 2003.

Time: 1 p.m. to 3 p.m.

Agenda: To review and evaluate grant applications.

Place: National Institutes of Health, 6120 Executive Blvd., Rockville, MD 20852, (Telephone Conference Call).

Contact Person: Ali A. Azadegan, DVM, PhD, Scientific Review Administrator, Scientific Review Branch, Division of Extramural Research, NIDCD, NIH, EPS–400C, 6120 Executive Blvd. MSC 7180, Bethesda, MD 20892–7180, (301) 496–8683, *azadegan@nih.gov.*

Name of Committee: National Institute on Deafness and Other Communications Disorders Special Emphasis Panel; ''Stem cell potential of olfactory epithelium''.

Date: June 26, 2003.

Time: 2 p.m. to 4:30 p.m.

Agenda: To review and evaluate grant applications.

Place: National Institutes of Health, 6120 Executive Blvd., Rockville, MD 20852, (Telephone Conference Call).

Contact Person: Sheo Singh, PhD, Scientific Review Administrator, Scientific Review Branch, Division of Extramural Research, Executive Plaza South, Room 400C, 6120 Executive Blvd, Bethesda, MD 301–496–8683.

(Catalogue of Federal Domestic Assistance Program Nos. 93.173, Biological Research Related to Deafness and Communicative Disorders, National Institutes of Health, HHS)

Dated: May 7, 2003.

Anna P. Snouffer,

Acting Director, Office of Federal Advisory Committee Policy.

[FR Doc. 03–12078 Filed 5–14–03; 8:45 am]

BILLING CODE 4140–01–M

DEPARTMENT OF HEALTH AND HUMAN SERVICES

National Institutes of Health

National Institute of Allergy and Infectious Diseases; Notice of Closed Meetings

Pursuant to section 10(d) of the Federal Advisory Committee Act, as amended (5 U.S.C. Appendix 2), notice is hereby given of the following meetings.

The meetings will be closed to the public in accordance with the provisions set forth in sections 552b(c)(4) and 552b(c)(6), Title 5 U.S.C., as amended. The grant applications and the discussions could disclose confidential trade secrets or commercial property such as patentable material, and personal information concerning individuals associated with the grant applications, the disclosure of which would constitute a clearly unwarranted invasion of personal privacy.

Name of Committee: National Institute of Allergy and Infectious Diseases Special Emphasis Panel, Comprehensive International Program of Research on AIDS (CIPRA)—Uganda/Kenya.

Date: May 30, 2003.

Time: 12 p.m. to 4 p.m.

Agenda: To review and evaluate grant applications.

Place: National Institutes of Health, Rockledge 6700, 6700B Rockledge Drive, Bethesda, MD 20817, (Telephone Conference Call).

Contact Person: Eleazar Cohen, PhD, Scientific Review Administrator, Scientific Review Program, National Institute of Allergy and Infectious Diseases, DEEA/NIH/DHHS, 6700 B Rockledge Drive, MSC 7616, Room 3112, Bethesda, MD 20892–7616, 301–435–3564, *ec17w@nih.gov.*

Name of Committee: National Institute of Allergy and Infectious Disease Special Emphasis Panel, Comprehensive International Program of Research on AIDS (CIPRA)—Thailand.

Date: June 4, 2003.

Time: 10 a.m. to 12:30 p.m.

Agenda: To review and evaluate grant applications.

Place: National Institutes of Health, Rockledge 6700, 6700B Rockledge Drive, Bethesda, MD 20817, (Telephone Conference Call).

Contact Person: Eleazar Cohen, PhD, Scientific Review Administrator, Scientific Review Program, National Institute of Allergy and Infectious Diseases, DEA/NIH/DHHS, 6700 B Rockledge Drive, MSC 7616, Room 3112, Bethesda, MD 20892–7616, 301–435–3564, *ec17w@nih.gov.*

Name of Committee: National Institute of Allergy and Infectious Diseases Special Emphasis Panel, Partnerships: Hepatitis B and Vector Borne Diseases Control (Part B: Tick-borne Diseases Transmission).

Date: June 13, 2003.

Time: 2 p.m. to 5 p.m.

Agenda: To review and evaluate grant applications.

Place: National Institutes of Health, Rockledge 6700, 6700B Rockledge Drive, Bethesda, MD 20817, (Telephone Conference Call).

Contact Person: Gary S. Madonna, PhD, Scientific Review Administrator, Scientific Review Program, Division of Extramural Activities NIAID, NIH, DHHS, 6700–B Rockledge Drive, MSC 7616, Room 2149, Bethesda, MD 20892–7616, 301–496–3528, *gm12w@nih.gov.*

Name of Committee: National Institute of Allergy and Infectious Diseases Special Emphasis Panel, Partnerships: Hepatitis B and Vector Borne Diseases Control (Part C: Arthropod Vector Control).

Date: June 17, 2003.

Time: 11 a.m. to 2 p.m.

Agenda: To review and evaluate grant applications.

Place: National Institutes of Health, Rockledge 6700, 6700–B Rockledge Drive, Bethesda, MD 20817, (Telephone Conference Call).

Contact Person: Gary S. Madonna, PhD, Scientific Review Administrator, Scientific Review Program, Division of Extramural Activities NIAID, NIH, DHHS, 6700–B Rockledge Drive, MSC 7616, Room 2149, Bethesda, MD 20892–7616, 301–496–3528, *gm12w@nih.gov.*

Name of Committee: National Institute of Allergy and Infectious Diseases Special Emphasis Panel, Partnerships: Hepatitis B and Vector Borne Diseases Control (Part A: Hepatitis B Therapies).

Date: June 18, 2003.

Time: 2 a.m. to 5 p.m.

Agenda: To review and evaluate grant applicants.

Place: National Institutes of Health Rockledge 6700, 6700–B Rockledge Drive, Bethesda, MD 20817, (Telephone Conference Call).

Contact Person: Gary S. Madonna, PhD., Scientific Review Administrator, Scientific Review Program, Division of Extramural Activities, NIAID, NIH, DHHS, 6700–B Rockledge Drive, MSC 7616, Room 2149, Bethesda, MD 20892–7616, 301–496–3528, *gm12w@nih.gov.*

(Catalogue of Federal Domestic Assistance Program Nos. 93.855, Allergy, Immunology, and Transplantation Research; 93.856, Microbiology and Infectious Diseases Research, National Institutes of Health, HHS)

Dated: May 8, 2003.

Anna P. Snouffer,

Deputy Director, Office of Federal Advisory Committee Policy.

[FR Doc. 03–12080 Filed 5–14–03; 8:45 am]

BILLING CODE 4140–01–M

DEPARTMENT OF HEALTH AND HUMAN SERVICES

National Institutes of Health

National Institute of Allergy and Infectious Diseases; Notice of Closed Meetings

Pursuant to section 10(d) of the Federal Advisory Committee Act, as amended (5 U.S.C. appendix 2), notice is hereby given of the following meetings.

The meetings will be closed to the public in accordance with the provisions set forth in sections 552b(c)(4) and 552b(c)(6), Title 5 U.S.C., as amended. The grant applications and the discussions could disclose confidential trade secrets or commercial property such as patentable material, and personal information concerning individuals associated with the grant applications, the disclosure of which would constitute a clearly unwarranted invasion of personal privacy.

Name of Committee: National Institute of Allergy and Infectious Diseases Special Emphasis Panel, National Biocontainment Laboratories.

Date: June 2–3, 2003.

Time: 8 a.m. to 5 p.m.

Agenda: To review and evaluate grant applications.

Place: Holiday Inn Georgetown, 2101 Wisconsin Avenue, NW., Washington, DC 20007.

Contact Person: Peter R. Jackson, PhD, Scientific Review Administrator, Scientific Review Program, Division of Extramural Activities, NIAID, NIH, Room 2217, 6700–B Rockledge Drive, MSC, 7616, Bethesda, MD 20892–7616, 301–496–2550.

Name of Committee: National Institute of Allergy and Infectious Diseases Special Emphasis Panel, 3 Unsolicited PO1s.

Date: June 2, 2003.

Time: 8 a.m. to 5 p.m.

Agenda: To review and evaluate grant applications.

Place: Holiday Inn Chevy Chase, 5520 Wisconsin Avenue, Chevy Chase, MD 20815.

Contact Person: Nasrin Nabavi, PhD, Scientific Review Administrator, Scientific Review Program, Division of Extramural Activities, NIAID, NIH, Room 2217, 6700–B Rockledge Drive, MSC, 7616, Bethesda, MD 20892–7616, 301–496–2550, *nn30t@nih.gov.*

Name of Committee: National Institute of Allergy and Infectious Diseases Special Emphasis Panel, Regional Biocontainment Laboratories.

Date: June 23–24, 2003.

Time: 8 a.m. to 5 p.m.

Agenda: To review and evaluate grant applications.

Place: Gaithersburg Marriott Washingtonian Center, 9751 Washingtonian Boulevard, Gaithersburg, MD 20878.

Contact Person: Robert C. Goldman, PhD, Scientific Review Administrator, Scientific Review Program, Division of Extramural Activities, NIAID, NIH, DHHS, Room 3124, 6700–B Rockledge Drive, MSC, 7616, Bethesda, MD 20892–7616, 301–496–8424, *rg159@nih.gov.*

Name of Committee: National Institute of Allergy and Infectious Diseases Special Emphasis Panel, Biodefense and Emerging Infectious Diseases Research Program Projects.

Date: June 25, 2003.

Time: 10 a.m. to 1 p.m.

Agenda: To review and evaluate grant applications and/or proposals.

Place: National Institutes of Health, Rockledge 6700, 6700–B Rockledge Drive, Room 1202, Bethesda, MD 20817 (Telephone Conference Call).

Contact Person: Paula S. Strickland, PhD, Scientific Review Administrator, Scientific Review Program, DHHS/NIH/NIAID/DEA/OD, Room 2139, 6700–B Rockledge Drive, MSC, 7616, Bethesda, MD 20892–7616, 301–435–8563, *ps30f@nih.gov.*

(Catalogue of Federal Domestic Assistance Program Nos. 93.855, Allergy, Immunology, and Transplantation Research; 93.856, Microbiology and Infectious Diseases Research, National Institutes of Health, HHS)

Dated: May 8, 2003.

Anna P. Snouffer,

Deputy Director, Office of Federal Advisory Committee Policy.

[FR Doc. 03–12081 Filed 5–14–03; 8:45 am]

BILLING CODE 4140–01–M

DEPARTMENT OF HEALTH AND HUMAN SERVICES

National Institutes of Health

National Institute of Diabetes and Digestive and Kidney Diseases; Notice of Closed Meeting

Pursuant to section 10(d) of the Federal Advisory Committee Act, as amended (5 U.S.C. appendix 2), notice is hereby given of the following meeting.

The meeting will be closed to the public in accordance with the provisions set forth in sections 552b(c)(4) and 552b(c)(6), Title 5 U.S.C., as amended. The grant applications and the discussions could disclose confidential trade secrets or commercial property such as patentable material, and personal information concerning individuals associated with the grant applications, the disclosure of which would constitute a clearly unwarranted invasion of personal privacy.

Name of Committee: National Institute of Diabetes and Digestive and Kidney Diseases Initial Review Group; Kidney, Urologic and Hematologic Diseases D Subcommittee.

Date: June 18–19, 2003.

Time: 2 p.m. to 3 p.m.

Agenda: To review and evaluate grant applications.

Place: Embassy Suites Hotel, 1300 Concourse Drive, Linthicum, MD 21090.

Contact Person: Neal A. Musto, PhD, Scientific Review Administrator, Review Branch, DEA, NIDDK, Room 751, 6707 Democracy Boulevard, National Institutes of Health, Bethesda, MD 20892–6600, (301) 594–7798, *muston@extra.niddk.nih.gov.*

(Catalogue of Federal Domestic Assistance Program Nos. 93.847, Diabetes, Endocrinology and Metabolic Research; 93.848, Digestive Diseases and Nutrition Research; 93.849, Kidney Diseases, Urology and Hematology Research, National Institutes of Health, HHS)

Dated: May 8, 2003.

Anna P. Snouffer,

Acting Director, Office of Federal Advisory Committee Policy.

[FR Doc. 03–12083 Filed 5–14–03; 8:45 am]

BILLING CODE 4140–01–M

DEPARTMENT OF HEALTH AND HUMAN SERVICES

National Institutes of Health

National Institute on Aging; Notice of Closed Meetings

Pursuant to section 10(d) of the Federal Advisory Committee Act, as amended (5 U.S.C. appendix 2), notice is hereby given of the following meetings.

The meetings will be closed to the public in accordance with the provisions set forth in sections 552b(c)(4) and 552b(c)(6), Title 5 U.S.C., as amended. The contract proposals and the discussions could disclose confidential trade secrets or commercial property such as patentable material, and personal information concerning individuals associated with the contract proposals, the disclosure of which would constitute a clearly unwarranted invasion of personal privacy.

Name of Committee: National Institute on Aging Special Emphasis Panel, Tissue Bank.

Date: May 14, 2003.

Time: 1 p.m. to 3 p.m.

Agenda: To review and evaluate contract proposals.

Place: National Institute on Aging, Gateway Building, 7201 Wisconsin Avenue, Bethesda, MD 20814, (Telephone Conference Call).

Contact Person: Arthur D. Schaerdel, DVM, The Bethesda Gateway Building, 7201 Wisconsin Avenue/Suite 2C212, Bethesda, MD 20892, (301) 496–9666.

This notice is being published less than 15 days prior to the meeting due to the timing limitations imposed by the review and funding cycle.

Name of Committee: National Institute on Aging Special Emphasis Panel; Nonhuman Primates.

Date: May 16, 2003.

Time: 1 p.m. to 3 p.m.

Agenda: To review and evaluate contract proposals.

Place: National Institutes of Health, 7201 Wisconsin Avenue, Bethesda, MD 20892, (Telephone Conference Call).

Contact Person: Arthur D. Schaerdel, DVM, The Bethesda Gateway Building, 7201 Wisconsin Avenue/Suite 2C212, Bethesda, MD 20892, (301) 496–9666.

This notice is being published less than 15 days prior to the meeting due to the timing limitations imposed by the review and funding cycle.

(Catalogue of Federal Domestic Assistance Program No. 93.866, Aging Research, National Institutes of Health, HHS)

Dated: May 8, 2003.

Anna P. Snouffer,

Acting Director, Office of Federal Advisory Committee Policy.

[FR Doc. 03–12084 Filed 5–14–03; 8:45 am]

BILLING CODE 4140–01–M

DEPARTMENT OF HEALTH AND HUMAN SERVICES

National Institutes of Health

National Institute on Aging; Notice of Closed Meetings

Pursuant to section 10(d) of the Federal Advisory Committee Act, as amended (5 U.S.C. appendix 2), notice is hereby given of the following meetings.

The meetings will be closed to the public in accordance with the provisions set forth in sections 552b(c)(4) and 552b(c)(6), Title 5 U.S.C., as amended. The grant applications and the discussions could disclose confidential trade secrets or commercial property such as patentable material, and personal information concerning individuals associated with the grant applications, the disclosure of which would constitute a clearly unwarranted invasion of personal privacy.

Name of Committee: National Institute on Aging Special Emphasis Panel, Translational Research Centers.

Date: May 13–14, 2003.

Time: 5 p.m. to 5 p.m.

Agenda: To review and evaluate grant applications.

Place: Holiday Inn Chevy Chase, 5520 Wisconsin Avenue, Chevy Chase, MD 20815.

Contact Person: Alfonso R. Latoni, PhD, Scientific Review Administrator, Scientific Review Office, National Institute on Aging, National Institutes of Health, 7201 Wisconsin Avenue, Room 2C212, Bethesda, MD 20892, 301/496–9666, *latonia@mail.nih.gov.*

This notice is being published less than 15 days prior to the meeting due to the timing limitations imposed by the review and funding cycle.

Name of Committee: National Institute on Aging Special Emphasis Panel, Restless Legs.

Date: May 30, 2003.

Time: 1 p.m. to 4 p.m.

Agenda: To review and evaluate grant applications.

Place: National Institute on Aging, Gateway Building, 7201 Wisconsin Avenue, Bethesda, MD 20814 (Telephone Conference Call).

Contact Person: William Cruce, PhD, Scientific Review Administrator, National Institute on Aging, National Institutes of Health, Scientific Review Office, Gateway Building 2C212, 7201 Wisconsin Avenue, Bethesda, MD 20892, 301–402–7704, (*crucew@nia.nih.gov.*)

Name of Committee: National Institute on Aging Special Emphasis Panel, Economics of Aging.

Date: June 1–2, 2003.

Time: 7 p.m. to 5 p.m.

Agenda: To review and evaluate grant applications.

Place: Hilton Boston Back Bay, 40 Dalton Street, Boston, MA 02115.

Contact Person: Alfonso R. Latoni, PhD, Scientific Review Administrator, Scientific Review Office, National Institute on Aging, National Institutes of Health, 7201 Wisconsin Avenue, Room 2C212, Bethesda, MD 20892, 301/496–9666, *latonia@mail.nih.gov.*

(Catalogue of Federal Domestic Assistance Program Nos. 93.866, Aging Research, National Institutes of Health, HHS)

Dated: May 8, 2003.

Anna P. Snouffer,

Acting Director, Office of Federal Advisory Committee Policy.

[FR Doc. 03–12085 Filed 5–14–03; 8:45 am]

BILLING CODE 4140–01–M

DEPARTMENT OF HEALTH AND HUMAN SERVICES

National Institutes of Health

National Institute on Aging; Amended Notice of Meeting

Notice is hereby given of a change in the meeting of the Board of Scientific Counselors, NIA, May 13, 2003, 8 a.m. to May 14, 2003, 3 p.m, Gerontology Research Center, National Institutes of Health, 5600 Nathan Shock Drive, Baltimore, MD, 21224–6825 which was published in the **Federal Register** on April 8, 1003, 68 FR 17962.

The portion of the meeting being held May 14, 2003 from 2:30 to 3 p.m. will be closed. The meeting is partially closed to the public.

Dated: May 8, 2003.

Anna P. Snouffer,

Acting Director, Office of Federal Advisory Committee Policy.

[FR Doc. 03–12086 Filed 5–14–03; 8:45 am]

BILLING CODE 4140–01–M

DEPARTMENT OF HEALTH AND HUMAN SERVICES

National Institutes of Health

National Institute of Biomedical Imaging and Bioengineering; Amended Notice of Meeting

Notice is hereby given of a change in the meeting of the National Advisory Council for Biomedical Imaging and Bioengineering, May 29, 2003, 8:30 a.m. to May 30, 2003, 5 p.m., National Institutes of health, Neuroscience Center, 6001 Executive Boulevard, Rockville, MD 20852 which was published in the **Federal Register** on April 22, 2003, 68 FR 7719841.

The meeting agenda has changed so that the open session of the meeting will be in the morning on May 29, and the closed session in the afternoon. The meeting is partially closed to the public.

Dated: May 8, 2003.

Anna P. Snouffer,

Deputy Director, Office of Federal Advisory Committee Policy.

[FR Doc. 03–12088 Filed 5–14–03; 8:45 am]

BILLING CODE 4140–01–M

DEPARTMENT OF HEALTH AND HUMAN SERVICES

National Institutes of Health

National Institute of Allergy and Infectious Diseases; Notice of Closed Meetings

Pursuant to section 10(d) of the Federal Advisory Committee Act, as amended (5 U.S.C. Appendix 2), notice is hereby given of the following meetings.

The meetings will be closed to the public in accordance with the provisions set forth in sections 552b(c)(4) and 552b(c)(6), Title 5 U.S.C., as amended. The grant applications and the discussions could disclose confidential trade secrets or commercial property such as patentable material, and personal information concerning individuals associated with the grant applications, the disclosure of which would constitute a clearly unwarranted invasion of personal privacy.

Name of Committee: National Institute of Allergy and Infectious Diseases Special Emphasis Panel; Comprehensive International Program of Research on AIDS (CIPRA).

Date: May 30, 2003.

Time: 12 p.m. to 3 p.m.

Agenda: To review and evaluate grant applications.

Place: National Institutes of Health, Rockledge 6700, 6700B Rockledge Drive, Bethesda, MD 20817, (Telephone Conference Call).

Contact Person: Gregory P. Jarosik, PhD, Scientific Review Administrator, Scientific Review Program, Division of Extramural Activities, NIAID, 6700B Rockledge Drive, MSC–7616, Bethesda, MD 20892, 301–496–2550, *gjarosik@niaid.nih.gov.*

Name of Committee: National Institute of Allergy and Infectious Diseases Special Emphasis Panel; Comprehensive International Program of Research on AIDS (CIPRA).

Date: June 5, 2003.

Time: 10:30 a.m. to 12:30 p.m.

Agenda: To review and evaluate grant applications.

Place: National Institutes of Health, Rockledge 6700, 6700B Rockledge Drive, Bethesda, MD 20817, (Telephone Conference Call).

Contact Person: Gregory P. Jarosik, PhD, Scientific Review Administrator, Scientific Review Program, Division of Extramural Activities, NIAID, 6700B Rockledge Drive, MSC–7616, Bethesda, MD 20892, 301–496–2550, *gjarosik@niaid.nih.gov.*

(Catalogue of Federal Domestic Assistance Program Nos. 93.855, Allergy, Immunology, and Transplantation Research; 93.856, Microbiology and Infectious Diseases Research, National Institutes of Health, HHS)

Dated: May 8, 2003.

Anna P. Snouffer,

Deputy Director, Office of Federal Advisory Committee Policy.

[FR Doc. 03–12089 Filed 5–14–03; 8:45 am]

BILLING CODE 4140–01–M

DEPARTMENT OF HEALTH AND HUMAN SERVICES

National Institutes of Health

National Institute of Nursing Research; Notice of Closed Meeting

Pursuant to section 10(d) of the Federal Advisory Committee Act, as amended (5 U.S.C. Appendix 2), notice is hereby given of the following meeting.

The meeting will be closed to the public in accordance with the provisions set forth in sections 552b(c)(4) and 552b(c)(6), Title 5 U.S.C., as amended. The grant applications and the discussions could disclose confidential trade secrets or commercial property such as patentable material, and personal information concerning individuals associated with the grant applications, the disclosure of which would constitute a clearly unwarranted invasion of personal privacy.

Name of Committee: National Institute of Nursing Research Special Emphasis Panel, Loan Repayment Program.

Date: May 14, 2003.

Time: 10 a.m. to 12 p.m.

Agenda: To review and evaluate grant applications.

Place: National Institute of Nursing Research, 6701 Democracy Plaza, Bethesda, MD 20817, (Telephone Conference Call).

Contact Person: John E. Richters, PhD., Scientific Review Administrator, Office of Review, Division of Extramural Activities, National Institute of Nursing Research, National Institutes of Health, 6701 Democracy Blvd., Room 715, Bethesda, MD 20817, (301) 594–5971, *jrichters@nih.gov.*

This notice is being published less than 15 days prior to the meeting due to the timing limitations imposed by the review and funding cycle.

(Catalogue of Federal Domestic Assistance Program Nos. 93.361, Nursing Research, National Institutes of Health, HHS).

Dated: May 6, 2003.

Anna P. Snouffer,

Acting Director, Office of Federal Advisory Committee Policy.

[FR Doc. 03–12096 Filed 5–14–03; 8:45 am]

BILLING CODE 4140–01–M

DEPARTMENT OF HEALTH AND HUMAN SERVICES

National Institutes of Health

National Institute of Dental & Craniofacial Research; Notice of Closed Meetings

Pursuant to section 10(d) of the Federal Advisory Committee Act, as amended (5 U.S.C. Appendix 2), notice is hereby give of the following meetings.

The meetings will be closed to the public in accordance with the provisions set forth in sections 552b(c)(4) and 552b(c)(6), Title 5 U.S.C., as amended. The grant applications and the discussions could disclose confidential trade secrets or commercial property such as patentable material, and personal information concerning individuals associated with the grant applications, the disclosure of which would constitute a clearly unwarranted invasion of personal privacy.

Name of Committee: National Institute of Dental and Craniofacial Research Special Emphasis Panel; 03–61, Review of R01s.

Date: May 28, 2003.

Time: 9 a.m. to 10:30 a.m.

Agenda: To review and evaluate grant applications.

Place: National Institutes of Health, Natcher Building, 45 Center Drive, Bethesda, MD 20892. (Telephone Conference Call).

Contact Person: Rebecca Roper, MS, MPH, Scientific Review Administrator, Scientific Review Branch, Division of Extramural Research, National Inst of Dental & Craniofacial Research, National Institutes of Health, 45 Center Dr., room 4AN32E, Bethesda, MD 20892, 301–451–5096.

Name of Committee: National Institute of Dental and Craniofacial Research Special Emphasis Panel 03–56, Review of R01s.
Date: May 28, 2003.
Time: 10:30 a.m. to 12 p.m.
Agenda: To review and evaluate grant applications.
Place: National Institutes of Health, Natcher Building, 45 Center Drive, Bethesda, MD 20892, (Telephone Conference Call).
Contact Person: Rebecca Roper, MS, MPH, Scientific Review Administrator, Scientific Review Branch, Division of Extramural Research, National Inst of Dental & Craniofacial Research, National Institutes of Health, 45 Center Dr., room 4AN32E, Bethesda, MD 20892, 301–451–5096.

Name of Committee: National Institute of Dental and Craniofacial Research Special Emphasis Panel; 03–72, Review of Ks and R03s.
Date: June 3, 2003.
Time: 11 a.m. to 2 p.m.
Agenda: To review and evaluate grant applications.
Place: National Institutes of Health, Natcher Building, 45 Center Drive, Bethesda, MD 20892, (Telephone Conference Call).
Contact Person: Lynn M King, Phd, Scientific Review Administrator, Scientific Review Branch, 45 Center Dr., Rm 4AN–38K, National Institute of Dental & Craniofacial Research, National Institutes of Health, Bethesda, MD 20892–6402, 301–594–5006.

Name of Committee: National Institute of Dental and Craniofacial Research Special Emphasis Panel 03–57, Review of R13s.
Date: June 10, 2003.
Time: 1 p.m. to 3 p.m.
Agenda: To review and evaluate grant applications.
Place: National Institutes of Health, Natcher Building, 45 Center Drive, Bethesda, MD 20892, (Telephone Conference Call).
Contact Person: H. George Hausch, PhD, Acting Director, 45 Center Drive, Natcher Building, Rm. 4AN44F, National Institutes of Health, Bethesda, MD 20892, (301) 594–2372.

Name of Committee: National Institute of Dental and Craniofacial Research Special Emphasis Panel 03–65, Review of R44s.
Date: June 12, 2003.
Time: 11 a.m. to 1 p.m.
Agenda: To review and evaluate grant applications.
Place: National Institutes of Health, Natcher Building, 45 Center Drive, Bethesda, MD 20892, (Telephone Conference Call).
Contact Person: Philip Washko, PhD, DMD, Scientific Review Administrator, 45 Center Drive, Natcher Building, Rm. 4AN44F, National Institutes of Health, Bethesda, MD 20892, (301) 594–2372.

Name of Committee: National Institute of Dental and Craniofacial Research Special Emphasis Panel 03–71, Review of U24 Progress Reports.
Date: August 20, 2003.
Time: 10 a.m. to 4 p.m.
Agenda: To review and evaluate review Interim Progress Reports.
Place: National Institutes of Health, Natcher Building, 45 Center Drive, Bethesda, MD 20892, (Telephone Conference Call).
Contact Person: H. George Hausch, PhD, Acting Director, 45 Center Drive, Natcher Building, Rm. 4AN44F, National Institutes of Health, Bethesda, MD 20892, (301) 594–2372.

(Catalogue of Federal Domestic Assistance Program Nos. 93.121, Oral Diseases and Disorders Research, National Institutes of Health, HHS)

Dated: May 7, 2003.

Anna P. Snouffer,

Acting Director, Office of Federal Advisory Committee Policy.

[FR Doc. 03–12100 Filed 5–14–03; 8:45 am]

BILLING CODE 4140–01–M

DEPARTMENT OF HEALTH AND HUMAN SERVICES

National Institutes of Health

National Library of Medicine; Notice of Closed Meeting

Pursuant to section 10(d) of the Federal Advisory Committee Act, as amended (5 U.S.C. Appendix 2), notice is hereby given of the following meeting.

The meeting will be closed to the public in accordance with the provisions set forth in sections 552b(c)(4) and 552b(c)(6), Title 5 U.S.C., as amended. The grant applications and the discussions could disclose confidential trade secrets or commercial property such as patentable material, and personal information concerning individuals associated with the grant applications, the disclosure of which would constitute a clearly unwarranted invasion of personal privacy.

Name of Committee: National Library of Medicine Special Emphasis Panel.
Date: June 5, 2003.
Time: 1 p.m. to 3 p.m.
Agenda: To review and evaluate grant applications.
Place: National Institutes of Health, 6705 Rockledge Drive, Bethesda, MD 20817, (Telephone Conference Call).
Contact Person: Merlyn M. Rodrigues, MD, PhD, Medical Officer/SRA, National Library of Medicine, Extramural Programs, 6705 Rockledge Drive, Suite 301, Bethesda, MD 20894.

(Catalogue of Federal Domestic Assistance Program Nos. 93.879, Medical Library Assistance, National Institutes of Health, HHS)

Dated: May 7, 2003.

Anna P. Snouffer,

Acting Director, Office of Federal Advisory Committee Policy.

[FR Doc. 03–12094 Filed 5–14–03; 8:45 am]

BILLING CODE 4140–01–M

DEPARTMENT OF HEALTH AND HUMAN SERVICES

National Institutes of Health

Clinical Center; Notice of Meeting

Pursuant to section 10(d) of the Federal Advisory Committee Act, as amended (5 U.S.C. appendix 2), notice is hereby given of the Board of Governors of the Warren Grant Magnuson Clinical Center.

The meeting will be closed to the public, with attendance limited to space available. Individuals who plan to attend and need special assistance, such as sign language interpretation or other reasonable accommodations, should notify the Contact Person listed below in advance of the meeting.

Name of Committee: Board of governors of the Warren Grant Magnuson Clinical Center, Executive Committee.
Date: June 13, 2003.
Time: 9 a.m. to 12 p.m.
Agenda: Updates on organizational planning and budget issues.
Place: National Institutes of Health, Building 10, 10 Center Drive, Bethesda, MD 20892.
Contact Person: Maureen E. Gormley, Executive Secretary, Warren Grant Magnuson Clinical Center, National Institutes of Health, Building 10, Room 2C146, Bethesda, MD 20892, 301/496–2897.
Information is also available on the Institute's/Center's home page: *www.cc.nih.gov/,* where an agenda and any additional information for the meeting will be posted when available.

Dated: May 8, 2003.

Anna P. Snouffer,

Acting Director, Office of Federal Advisory Committee Policy.

[FR Doc. 03–12091 Filed 5–14–03; 8:45 am]

BILLING CODE 4140–01–M

DEPARTMENT OF HEALTH AND HUMAN SERVICES

Public Health Service

National Toxicology Program (NTP); National Institute of Environmental Health Sciences; the NTP Center for the Evaluation of Risks to Human Reproduction (CERHR) Expert Panel Report on the Developmental and Reproductive Toxicity of Ethylene Glycol and the CERHR Expert Panel Report on the Developmental and Reproductive Toxicity of Propylene Glycol: Notice of Availability and Request for Public Comments

Summary

Notice is hereby given of the availability of the Expert Panel Report on the Developmental and Reproductive

Toxicity of Ethylene Glycol and the Expert Panel Report on the Developmental and Reproductive Toxicity of Propylene Glycol. These reports include the summaries and conclusions of the expert panel's evaluation of the scientific data for potential reproductive and/or developmental hazards associated with exposure to ethylene glycol and to propylene glycol. The CERHR held this expert panel meeting in February 2003. CERHR is seeking public comment on these reports and additional information about recent, relevant toxicology or human exposure studies.

Availability of Reports

These expert panel reports are available electronically on the CERHR Web site (*http://cerhr.niehs.nih.gov*) and in printed copy by contacting the CERHR [P.O. Box 12233, MD EC–32, Research Triangle Park, NC 27709; telephone: (919) 541–3455; fax: (919) 316–4511; or email: *shelby@niehs.nih.gov*].

Request for Public Comments

The CERHR invites public comments on these expert panel reports and input regarding any recent, relevant toxicology or human exposure studies. The CERHR requests that all comments and other information be submitted to the CERHR at the address above by July 14, 2003.

All public comments received by the date above will be reviewed and included in the final NTP–CERHR monograph on ethylene glycol or propylene glycol to be prepared by NTP staff. The NTP–CERHR monograph will include the NTP brief, expert panel report, and all public comments received on the report. The brief will provide the NTP's interpretation of the potential for adverse reproductive and/or developmental effects to humans from exposure to ethylene glycol or propylene glycol. The NTP will transmit the NTP–CERHR monograph to the appropriate federal and state agencies, the public, and the scientific community.

Background

A 9-member expert panel composed of scientists from state and federal governments, universities, and private companies conducted an evaluation of the reproductive and developmental toxicities of ethylene glycol and propylene glycol [**Federal Register** Vol. 67 No. 236, pp. 72965–72967, December 9, 2002]. Public deliberations by the panel took place February 11–13, 2003 at the Holiday Inn Old Town Select in Alexandria, Virginia. Following the February meeting, the draft expert panel report for each chemical was revised to incorporate the panel's conclusions and subsequently reviewed by the Ethylene Glycol and Propylene Glycol Expert Panel, NTP scientists, and CERHR personnel.

Ethylene glycol is a high production volume chemical used as a chemical intermediate in the production of polyester compounds. There is widespread public exposure to ethylene glycol due to its use in heating and cooling systems (*e.g.*, automotive antifreeze and as a de-icer for aircraft). Propylene glycol is used commercially as an intermediate in the manufacture of unsaturated polyester resins and in the production of plasticizers. Similar in structure to ethylene glycol, public exposure is through its FDA-approved use in food, tobacco, pharmaceutical products, and cosmetics, its use in various paints and coatings, and as an antifreeze and de-icing solution.

Additional Information About CERHR

The NTP and the NIEHS established the NTP CERHR in June 1998 [**Federal Register** Vol. 63, No. 239, page 68782, December 1998]. The purpose of the CERHR is to provide scientifically based, uniform assessments of the potential for adverse effects on reproduction and development caused by agents to which humans may be exposed. Further information on the CERHR's chemical review process, including how to nominate chemicals for evaluation and scientists for the expert registry, can be obtained from its Web site (*http://cerhr.niehs.nih.gov*) or by contacting the CERHR directly (see address above). The CERHR also serves as a resource for information on various environmental exposures and their potential to affect pregnancy and child development. The Web site has information about common concerns related to fertility, pregnancy and the health of unborn children and links to other resources for information about public health.

Dated: May 7, 2003.

Samuel H. Wilson,

Deputy Director, National Institute of Environmental Health Sciences.

[FR Doc. 03–12101 Filed 5–14–03; 8:45 am]

BILLING CODE 4140–01–P

DEPARTMENT OF HOMELAND SECURITY

Transportation Security Administration

Reports, Forms, and Record Keeping Requirements: Agency Information Collection Activity Under OMB Review; Aviation-Related Assistance in the Emergency Wartime Supplemental Appropriations Act of 2003

AGENCY: Transportation Security Administration (TSA), Department of Homeland Security.

ACTION: Notice of emergency clearance request.

SUMMARY: TSA has submitted a request for emergency processing of a new public information collection to the Office of Management and Budget (OMB) for review and clearance under the Paperwork Reduction Act of 1995 (Pub. L. 104–13, 44 U.S.C. 35). This notice announces that the Information Collection Request (ICR) abstracted below has been forwarded to OMB for review and comment. The ICR describes the nature of the information collection and its expected burden.

DATES: Send your comments by June 16, 2003. A comment to OMB is most effective if OMB receives it within 30 days of publication.

ADDRESSES: Comments may be faxed to the Office of Information and Regulatory Affairs, Office of Management and Budget, Attention: DHS-TSA Desk Officer, at (202) 395–5806.

FOR FURTHER INFORMATION CONTACT: Conrad Huygen, Privacy Act Officer, Information Management Programs, Office of Finance and Administration, Transportation Security Administration HQ, West Tower, Floor 4, TSA–17, 400 Seventh Street, SW., Washington, DC 20590–0001; telephone (571) 227–1954; facsimile (571) 227–2912.

SUPPLEMENTARY INFORMATION:

Transportation Security Administration

Title: Aviation-related Assistance in the Emergency Wartime Supplemental Appropriations Act of 2003.

OMB Control Number: 1652–0012.

Type of Request: Emergency processing request of new collection.

Forms(s): NA.

Affected Public: U.S. Flag commercial air carriers.

Abstract: Pursuant to Public Law No. 108–11, 117 Stat. 559 (4/16/2003), ''Emergency Wartime Supplemental Appropriations Act, 2003'', TSA is required to remit approximately $2.3 billion to U.S. Flag air carriers based on the proportional share each such carrier has paid or collected as of the date of

enactment of this Act in passenger security and air carrier security fees to TSA. Prior to remittance of these funds, the Act requires TSA to enter into an executive compensation agreement with certain carriers as defined by the statute. To ascertain which carriers are required to enter into the compensation agreement, TSA is requesting that the airlines certify whether they are bound by statutory requirements, as each carrier is in the best position to know its own situation. TSA is therefore requiring each carrier to certify that funds were allocated appropriately and prepare a report detailing this information.

Number of Respondents: 70.

Estimated Annual Burden Hours: It is estimated that this certification and report will take 8 hours for each carrier to prepare, for a total burden of 560 hours.

TSA is soliciting comments to—

(1) Evaluate whether the proposed information requirement is necessary for the proper performance of the functions of the agency, including whether the information will have practical utility;

(2) Evaluate the accuracy of the agency's estimate of the burden;

(3) Enhance the quality, utility, and clarity of the information to be collected; and

(4) Minimize the burden of the collection of information on those who are to respond, including through the use of appropriate automated, electronic, mechanical, or other technological collection techniques or other forms of information technology.

Issued in Arlington, Virginia, on May 8, 2003.

Susan T. Tracey,

Deputy Chief Administrative Officer.

[FR Doc. 03–12172 Filed 5–14–03; 8:45 am]

BILLING CODE 4910–62–P

DEPARTMENT OF HOUSING AND URBAN DEVELOPMENT

[Docket No. FR–4820–N–22]

Notice of Proposed Information Collection: Comment Request; Single Family Application for Insurance Benefits

AGENCY: Office of the Assistant Secretary for Housing-Federal Housing Commissioner, HUD.

ACTION: Notice

SUMMARY: The proposed information collection requirement described below will be submitted to the Office of Management and Budget (OMB) for review, as required by the Paperwork Reduction Act. The Department is soliciting public comments on the subject proposal.

DATES: *Comments Due Date:* July 14, 2003.

ADDRESSES: Interested persons are invited to submit comments regarding this proposal. Comments should refer to the proposal by name and/or OMB Control Number and should be sent to: Wayne Eddins, Reports Management Officer, Department of Housing and Urban Development, 451 7th Street, SW., L'Enfant Plaza Building, Room 8003, Washington, DC 20410 or *WayneEddins@hud.gov.*

FOR FURTHER INFORMATION CONTACT: Joseph McCloskey, Director, Office of Single Family Asset Management, Department of Housing and Urban Development, 451 7th Street, SW., Washington, DC 20410, telephone (202) 708–1672 (this is not a toll free number) for copies of the proposed forms and other available information.

SUPPLEMENTARY INFORMATION: The Department is submitting the proposed information collection to OMB for review, as required by the Paperwork Reduction Act of 1995 (44 U.S.C. chapter 35, as amended).

This Notice is soliciting comments from members of the public and affected agencies concerning the proposed collection of information to: (1) Evaluate whether the proposed collection is necessary for the proper performance of the functions of the agency, including whether the information will have practical utility; (2) evaluate the accuracy of the agency's estimate of the burden of the proposed collection of information; (3) enhance the quality, utility, and clarity of the information to be collected; and (4) minimize the burden of the collection of information on those who are to respond, including the use of appropriate automated collection techniques or other forms of information technology, *e.g.*, permitting electronic submission of responses.

This Notice also lists the following information:

Title of Proposal: Single Family Application for Insurance Benefits.

OMB Control Number, if applicable: 2502–0429.

Description of the need for the information and proposed use: Mortgagees are required to complete this information collection in order to claim their insurance benefits on defaulted single-family mortgages. This information collection is used to provide HUD the information needed to process and pay claims on defaulted FHA-insured home mortgage loans.

Agency form numbers, if applicable: HUD–27011, parts A, B, C, D, & E.

Estimation of the total numbers of hours needed to prepare the information collection including number of respondents, frequency of response, and hours of response: The estimated total number of burden hours needed to process the information collection is 150,000; the number of respondents is 450 generating approximately 200,000 annual responses; the frequency of response varies from once to 5,000 depending upon the lender's portfolio; and the estimated time needed to prepare the response is 45 minutes.

Status of the proposed information collection: Extension of a currently approved collection.

Authority: The Paperwork Reduction Act of 1995, 44 U.S.C., chapter 35, as amended.

Dated: May 8, 2003

Sean G. Cassidy,

General Deputy Assistant Secretary for Housing-Deputy Federal Housing Commissioner.

[FR Doc. 03–12122 Filed 5–14–03; 8:45 am]

BILLING CODE 4210–27–M

DEPARTMENT OF HOUSING AND URBAN DEVELOPMENT

[Docket No. FR–4820–N–23]

Notice of Proposed Information Collection: Comment Request; Multifamily Housing Service Coordinator Program

AGENCY: Office of the Assistant Secretary for Housing-Federal Housing Commissioner, HUD.

ACTION: Notice.

SUMMARY: The proposed information collection requirement described below will be submitted to the Office of Management and Budget (OMB) for review, as required by the Paperwork Reduction Act. The Department is soliciting public comments on the subject proposal.

DATES: *Comments Due Date:* July 14, 2003.

ADDRESSES: Interested persons are invited to submit comments regarding this proposal. Comments should refer to the proposal by name and/or OMB Control Number and should be sent to: Wayne Eddins, Reports Management Officer, Department of Housing and Urban Development, 451 7th Street, SW., L'Enfant Plaza Building, Room 8003, Washington, DC 20410 or *Wayne_Eddins@hud.gov.*

FOR FURTHER INFORMATION CONTACT: Willie Spearmon, Director, Office of

Housing Assistance and Grant Administration, Department of Housing and Urban Development, 451 7th Street SW., Washington, DC 20410, telephone (202) 708–3000 (this is not a toll free number) for copies of the proposed forms and other available information.

SUPPLEMENTARY INFORMATION: The Department is submitting the proposed information collection to OMB for review, as required by the Paperwork Reduction Act of 1995 (44 U.S.C. chapter 35, as amended).

This Notice is soliciting comments from members of the public and affected agencies concerning the proposed collection of information to: (1) Evaluate whether the proposed collection is necessary for the proper performance of the functions of the agency, including whether the information will have practical utility; (2) Evaluate the accuracy of the agency's estimate of the burden of the proposed collection of information; (3) Enhance the quality, utility, and clarity of the information to be collected; and (4) Minimize the burden of the collection of information on those who are to respond; including the use of appropriate automated collection techniques or other forms of information technology, *e.g.,* permitting electronic submission of responses.

This Notice also lists the following information:

Title of Proposal: Multifamily Housing Service Coordinator Program.

OMB Control Number, if applicable: 2502–0447.

Description of the need for the information and proposed use: HUD evaluates the grant applications (SF–424 and related documents) for the need and proposed use of grant funds and owners' ability to administer awarded funds of the Multifamily Housing Service Coordinator Program. HUD staff will use requests for extensions to evaluate anticipated program costs and the continued need for the program. The semi-annual Performance Reports will be used to determine how well grant funds met stated program goals. Grantees will also be able to retain data on the effectiveness of the program and how well the public was served. The Payment Voucher is used to monitor grant funds for eligible costs over the term of the grant, and the grantee may similarly use this voucher to track and record their requests for payment reimbursement for grant-funded expenses.

Agency form numbers, if applicable: HUD–50080–SCMF, HUD–91186/91186–i, HUD–91186–A & HUD–92456.

Estimation of the total numbers of hours needed to prepare the information collection including number of respondents, frequency of response, and hours of response: The estimated total number of burden hours needed to prepare the information collection is 51,100; the number of respondents is 6,700 generating approximately 14,400 annual responses; the frequency of response is quarterly, semi-annually, and annually; and the estimated time needed to prepare the response varies from 15 minutes to 40 hours.

Status of the proposed information collection: Extension of a currently approved collection.

Authority: The Paperwork Reduction Act of 1995, 44 U.S.C. chapter 35, as amended.

Dated: May 8, 2003.

Sean G. Cassidy,

General Deputy Assistant Secretary for Housing-Deputy Federal Housing Commissioner.

[FR Doc. 03–12123 Filed 5–14–03; 8:45 am]

BILLING CODE 4210–27–M

DEPARTMENT OF HOUSING AND URBAN DEVELOPMENT

[Docket No. FR–4820–N–24]

Notice of Proposed Information Collection: Comment Request; Application for Approval—FHA Lender and/or Ginnie Mae Mortgage-Backed Securities Issuer Branch Office Notification—Title I/Title II

AGENCY: Office of the Assistant Secretary for Housing-Federal Housing Commissioner, HUD.

ACTION: Notice.

SUMMARY: The proposed information collection requirement described below will be submitted to the Office of Management and Budget (OMB) for review, as required by the Paperwork Reduction Act. The Department is soliciting public comments on the subject proposal.

DATES: *Comments Due Date:* July 14, 2003.

ADDRESSES: Interested persons are invited to submit comments regarding this proposal. Comments should refer to the proposal by name and/or OMB Control Number and should be sent to: Wayne Eddins, Reports Management Officer, Department of Housing and Urban Development, 451 7th Street, SW., L'Enfant Plaza Building, Room 8003, Washington, DC 20410 or *Wayne_Eddins@hud.gov.*

FOR FURTHER INFORMATION CONTACT: Phillip A. Murray, Director, Office of Lender Activities, Assistant Secretary for Housing, Department of Housing and Urban Development, 451 7th Street SW., Washington, DC 20410, telephone (202) 708–1515 (this is not a toll free number) for copies of the proposed forms and other available information.

SUPPLEMENTARY INFORMATION: The Department is submitting the proposed information collection to OMB for review, as required by the Paperwork Reduction Act of 1995 (44 U.S.C. chapter 35, as amended).

The Notice is soliciting comments from members of the public and affected agencies concerning the proposed collection of information to: (1) Evaluate whether the proposed collection is necessary for the proper performance of the functions of the agency, including whether the information will have practical utility; (2) Evaluate the accuracy of the agency's estimate of the burden of the proposed collection of information; (3) Enhance the quality, utility, and clarity of the information to be collected; and (4) Minimize the burden of the collection of information on those who are to respond; including the use of appropriate automated collection techniques or other forms of information technology, *e.g.,* permitting electronic submission of responses.

The Notice also lists the following information:

Title of Proposal: Application for Approval—FHA Lender and/or Ginnie Mae Mortgage-Backed Securities Issuer Branch Office Notification—Title I/Title II.

OMB Control Number, if applicable: 2502–0005.

Description of the need for the information and proposed use: The Federal Housing Administration (FHA) and the Government National Mortgage Association (Ginnie Mae) of the Department of Housing and Urban Development approve entities to participate as Title I lenders, Title II mortgagees, and the Ginnie Mae mortgage-backed securities issuers. Specific information must be obtained and reviewed to determine if an entity meets the criteria to obtain the requested approval. In addition, this submission covers subsequent information required by FHA in order for entities to maintain their approval, update information previously submitted on the entity, report any non-compliances, and voluntarily terminate their FHA approval.

Agency form numbers, if applicable: HUD–11701 and HUD–92001–B.

Estimation of the total numbers of hours needed to prepare the information collection including number of respondents, frequency of response, and hours of response:

INFORMATION COLLECTION BURDEN HOUR

Item No.	Information collection	Number of expected respondents	Total annual responses	Hours per response	Total annual hours
1	HUD–11701—Application for FHA Approval, by paper (including attachments).	2,000	2,000	2.00	4,000
1	HUD–11701 Application for Ginnie Mae Approval, by paper (including attachments).	50	50	1.25	63
2	HUD–92100–B Application for New Branch by loan correspondents, by paper (including attachments).	1,000	1,500	.50	750
3	Electronic Registration of New Branch by Mortgages via FHA Connection.	1,500	2,500	.10	250
4	Electronic Termination of Existing Branch by all lenders via FHA Connection.	1,000	3,000	.05	150
5	Cover Sheet for Application Fee or Conversion of Mortgagee Type for Title I Approval (by paper).	200	200	.05	10
5	Cover Sheet for Application Fee or Conversion of Mortgagee Type for Title II Approval (by paper).	1,800	1,800	.05	90
5	Application Fee for Branch registration electronically or request for approval in paper using HUD 92001–B.	2,500	4,000	.05	200
6	Annual Verification Report by all approved lenders (by paper).	11,500	11,500	.10	1,150
7	Non-Address Business Change Notification (by paper)	600	600	.50	300
8	Address Updates via FHA Connection	1,500	3,000	.25	750
9	Personnel Change Notification of new owners, officers, directors or partners (by paper).	1,000	1,000	.50	500
10	Non-Compliance Notification pursuant to Lender Quality Control Plans (by paper).	300	600	1.00	600
11	Voluntary Termination by a Lender (by letter)	500	500	.25	125
Total		25,450	32,250		8,938

Status of the proposed information collection: Revision of a currently approved collection.

Authority: The Paper Reduction Act of 1995, 44 U.S.C. chapter 35, as amended.

Dated: May 8, 2003.

Sean G. Cassidy,

General Deputy Assistant Secretary for Housing-Deputy Federal Housing Commissioner.

[FR Doc. 03–12124 Filed 5–14–03; 8:45 am]

BILLING CODE 4210–27–M

DEPARTMENT OF THE INTERIOR

Bureau of Indian Affairs

[No. CIV 90–0957 LH/WWD ACE]

Notice of Distribution of Second Partial Settlement: Ramah Navajo Chapter v. Gale Norton

AGENCY: Bureau of Indian Affairs, Interior.

ACTION: Notice.

SUMMARY: A Notice of the Distribution of the Second Partial Settlement is contained in this announcement. The Notice describes procedures for the payment and distribution of the Net Common Fund, including eligibility for payment, necessary documentation and related information.

FOR FURTHER INFORMATION CONTACT: Michael P. Gross, Class Counsel, M.P. Gross & Associates, P.C., 460 St. Michael's Drive, #300, Santa Fe, NM 87505–7602; Telephone No. (505) 983–6686; Fax (505) 989–1096; E-mail address: *mpgross@cnsp.com;* or C. Bryant Rogers, Co-Class Counsel, Roth, VanAmberg, Rogers, Ortiz, Fairbanks & Yepa, LLP, Post Office Box 1447, Santa Fe, NM 87504–1447; Telephone No. (505) 988–8979; Fax (505) 983–7508; E-mail address: *cbrogers@nmlawgroup.com;* or Lloyd B. Miller, Co-Class Counsel for the DCSC Claim, Sonosky Chambers Sachse Miller and Munson, 900 W Fifth Street, Suite 700, Anchorage, Alaska 99501; Telephone No. (907) 258–6377; Fax (907) 2723–8332; E-mail address: *lloyd@sonosky.net*

SUPPLEMENTARY INFORMATION: This notice is published in accordance with the authority delegated by the Secretary of the Interior to the Assistant Secretary—Indian Affairs by 209 Departmental Manual 8.1.

The Class Distribution Notice in *Ramah Navajo Chapter, Oglala Sioux Tribe, and Pueblo of Zuni, for themselves and on behalf of a class of persons similarly situated,* v. *Gale Norton, Secretary of the Interior, in her official capacity, United States Department of the Interior, Neal McCaleb, Assistant Secretary for Indian Affairs, in his official capacity, Earl Devaney, Inspector General, in his official capacity, and the United States of America* (No. CIV 90–0957 LH/WWD ACE), before the United States District Court for the District of New Mexico, reads as set forth below.

Dated: May 5, 2003.

Aurene M. Martin,

Assistant Secretary—Indian Affairs.

Class Distribution Notice Number 1; Second Partial Settlement (PSA–2); Introduction

With this notice, Class Counsel are commencing distribution of the Second Partial Settlement (PSA–2) paid by Defendants on March 21, 2003. The Net Common Fund to be distributed pursuant to this notice is $22,230,594.49. A second distribution of the remaining balance in the Reserve Account (to which all interest accruals of the Net Common Fund and Reserve Account are deposited) will occur later. PSA–2 settles remaining claims for three years only: FY 1992, FY 1993, and FY 1994.

The proceeds of PSA–2 were deposited pursuant to Court Order in the Court Registry Investment System (CRIS) administered by the Clerk of the United States District Court for the Southern District of Texas (Houston). The Class has engaged the Albuquerque firm of REDW, LLC, as the Independent

CPA (Settlement Administrator) to assist in the distribution of the Net Common Fund of these settlement proceeds. Class Counsel have also engaged Kenton Keckler, CPA to serve as Class Monitor. As such, Mr. Keckler has responsibility for confirming that the Independent CPA's implementation of the PSA–2 is in conformity with the provisions of the PSA–2 agreement as approved by the court.

The purpose of this Notice is:

1. To publish a provisional list of Class Members who may be eligible for an allocation from the Net Common Fund and to provide procedures to challenge the stated amount of BIA expenditures contained in the attachment. (See Attachment A for the Provisional List.)

2. To give notice to any tribe or tribal entity not on the provisional list of procedures it must follow in order to challenge omission from the list.

3. To give notice to all Class Members of the requirement to submit a timely Claim Form with requested documents and the deadline for submitting Claim Forms to the Settlement Administrator. (See Attachment B for the Claim Form.)

4. To outline procedures for Class Members who may wish to relinquish their shares in this settlement.

Any conflict between this Notice and the Second Partial Settlement Agreement (PSA–2) will be resolved in favor of the Settlement Agreement. The entire Second Partial Settlement Agreement including Appendix F may be found on the Class web site at: *http:www.rncsettlement.com.*

I. How Are Shares Calculated?

The allocations will be made on the basis of each Class Member's actual credited BIA expenditures (not including construction expenses exceeding $100,000) as shown in the Claim Form compared with those of the entire Class. To be eligible for a full allocation covering all three settlement years, each claimant must certify under penalty of perjury that it meets the criteria for eligibility for all three years. If the claimant meets the criteria for only two years, it will receive a two-thirds allocation. If it meets the criteria for only one year, it will receive a one-third allocation. See Appendix F.

II. Who Is Eligible for a Share in This Settlement?

A. Only Class Members which had a Public Law 93–638 contract or compact with the Bureau of Indian Affairs during any of the settlement years, FY 1992, FY 1993, or FY 1994, are eligible to share in the proceeds of this settlement. Class Members who also had a school grant under the Tribally Controlled School Grants Act, 25 U.S.C. 2001 *et seq.* may include their school grant amount in the share calculation *only* if they had an indirect cost rate and the grant was included in the direct cost base for that rate. School grantees who did not have a Public Law 93–638 contract are not Class Members.

B. To qualify for a share in PSA–2, each Class Member must submit a Claim Form, duly executed and notarized, to the Settlement Administrator within 60 days of publication of this Notice in the **Federal Register**.

III. Provisional List of Class Members and Procedure for Correcting Your Entry

Attached to this Notice is a list of tribes and tribal entities compiled by Class Counsel who may be members of the Class eligible for an allocation from the Net Common Fund. This list is also published on the Class web site and will be published in the **Federal Register**. The web site contains important pleadings, other documents, and notices previously sent to the Class as well as the complete Second Partial Settlement Agreement including Appendix F.

A. If You Are on the List But Wish To Disclaim a Share of This Settlement

There are no opt outs and the period for opting out of the class action has passed. If your tribe or tribal organization does not wish to receive a share of this settlement, this may be achieved by so indicating on the attached claim form or by sending a letter to the Settlement Administrator disclaiming any share of this settlement. Tribes which so indicate will remain class members but will be removed from the list used in future mailings regarding this settlement.

B. If You Are Not on the List But Are a Class Member Who Wishes To Be Included or Who Wishes To Challenge the Provisional List Data for Your Entity

Any tribal entity which does not appear on the provisional list or wishes to challenge the accuracy of its data on the provisional list and which believes it is a Class Member eligible to receive a share of the Net Common Fund must file a statement certifying under oath that it had a Public Law 93–638 contract or self-governance compact with the BIA during any one or more of the settlement years FY 1992 through FY 1994. The response must state that the information provided is true and correct to the best of the signatory's knowledge, information, and belief. The statement must also be accompanied by documentary proof (*e.g.*, ''Schedule of Federal Financial Assistance'' from your annual single agency audit or alternative documentation such as contract award documents and IDC agreements, etc.) showing existence of the elements and amounts for eligibility under Part I of this Notice for each year the entity claims to have had such contracts or compacts. The completed claim form and supporting documentation must be received by REDW, LLC no later than 60 days after the date of publication of this Notice in the **Federal Register** and must also be served on Plaintiffs' and Defendants' Counsel within the same period. Addresses for Class Counsel are set out at the end of this notice. Defendant's counsel's address is: Karen K. Richardson, Esq., United States Department of Justice, Civil Division, Post Office Box 883, Benjamin Franklin Station, Washington, DC 20044.

Challenges to inclusion or exclusions from the provisional list by other Class Members are not permitted.

IV. You Must Timely File a Claim Form To Share in This Settlement

Each Class Member must submit to the Settlement Administrator the attached claim form duly executed and notarized by the responsible official plus such financial information about its federal funding expenditures for each of the settlement years as may be required on the form.

The preferred information to be attached to the claim form is your ''Schedule of Federal Financial Assistance (SFFA)'' in your annual single agency audit for the relevant year or years.

If the SFFA is not on file and cannot be located, alternative documentation may be substituted if acceptable to the Settlement Administrator.

Audit data received from Class Members will be kept confidential pursuant to Paragraph 9(C) of Appendix D of the First Partial Settlement Agreement (PSA–1), except for publication of BIA funding expenditures data in connection with this distribution as authorized by Appendix F, PSA–2. Entities for whom the required documents are not received will not receive an allocation.

If the Court, on petition, later finds that the methodology for distribution of PSA–2 is unworkable, too costly, or not beneficial to the interests of the Class, some other method may be substituted after notice and an opportunity for hearing objections.

After expiration of the response period set forth in this Notice, the Settlement Administrator will determine the Final List of Class Members who have been determined to

be eligible for an allocation under PSA–2. The Notice accompanying this ''Final Share Percentage Schedule'' (FSPS) will provide a final means for challenging the share percentage stated in the FSPS.

Unless Class Members timely submit a claim form and provide necessary documentation to the Settlement Administrator, they will not receive a share of the Net Common Fund.

The claim form must be mailed to: REDW, LLC, Ramah Navajo Chapter Class Action Settlement Administrator, 6401 Jefferson NE, Post Office Box 93659, Albuquerque, New Mexico 87199–3659; Telephone No. 1–888–726–9418; Web site: *http:www.rncsettlement.com*; Email address: *rncsettlement@redw.com*

Questions regarding this notice should be directed to the Settlement Administrator at the above address or to Class Counsel below.

Michael P. Gross, Class Counsel, M. P. Gross & Associates, P.C., 460 St. Michael's Drive, #300, Santa Fe, NM 87505–7602; Telephone No. (505) 983–6686; Fax No. (505) 989–1096; Email address: *mpgross@cnsp.com.*

C. Bryant Rogers, Co-Class Counsel, Roth, VanAmberg, Rogers, Ortiz, Fairbanks & Yepa, LLP, Post Office Box 1447, Santa Fe, NM 87504–1447; Telephone No. (505) 988–8979; Fax No. (505) 983–7508; Email address: *cbrogers@nmlawgroup.com.*

Lloyd B. Miller, Co-Class Counsel for the DCSC Claim, Sonosky Chambers Sachse Miller and Munson, 900 W. Fifth Street, Suite 700, Anchorage, Alaska 99501; Telephone No. (907) 258–6377; Fax No. (907) 2723–8332; Email address: *lloyd@sonosky.net.*

ATTACHMENT A.—RAMAH NAVAJO CHAPTER SETTLEMENT ADMINISTRATION

[Information on file for the base year amount for 1993; Appendix F paragraph 10(b)—Provisional List (part 1 of 2); Alphabetical order—by organization]

Tribe/Organization	Control No.	1993 BIA expenditures
1854 AUTHORITY	1040	$385,083
ABSENTEE–SHAWNEE TRIBE OF OKLAHOMA	1	1,144,671
AKIACHAK NATIVE COMMUNITY (IRA)	11	102,985
ALABAMA–COUSHATTA TRIBE OF TEXAS	14	1,005,948
ALAMO NAVAJO SCHOOL BOARD INC	17	2,860,123
ALEUTIAN/PRIBOLOF ISLAND ASSOCIATION	22	876,862
ALL INDIAN PUEBLO COUNCIL	24	572,687
ARTIC SLOPE COMMUNITY	38	826,772
ASSOCIATION OF VILLAGE COUNCIL PRESIDENTS INC	43	3,372,828
BAD RIVER BAND OF LAKE SUPERIOR CHIPPEWA INDIANS	51	936,549
BAY MILLS COMMUNITY COLLEGE	908	665,657
BAY MILLS INDIAN COMMUNITY	56	1,734,035
BIG LAGOON RANCHERIA	67	81,777
BIG PINE PAUITE SHOSHONE BAND	68	225,648
BISHOP PAIUTE TRIBE	74	191,163
BLACKFEET TRIBE	77	3,504,136
BLUE LAKE RANCHERIA OF CALIFORNIA	78	131,087
BOARD OF DIRECTORS TRENTON INDIAN SERVICE AREA	79	320,577
BOIS FORTE BAND OF MINNESOTA CHIPPEWA TRIBE	495	549,864
BURNS PAIUTE TRIBE	89	481,324
CADDO TRIBE OF OKLAHOMA	93	23,325
CAHUILLA BAND OF INDIANS	95	70,969
CAMPO BAND OF MISSION INDIANS	97	37,358
CENTRAL COUNCIL OF THE TLINGIT AND HAIDA INDIAN TRIBES	108	5,843,029
CHER-AE HEIGHTS INDIAN COMMUNITY OF THE TRINIDAD RANCHERIA	117	68,449
CHEROKEE NATION	120	12,135,102
CHEYENNE RIVER COMMUNITY COLLEGE	920	831,795
CHEYENNE RIVER SIOUX TRIBE	122	5,419,641
CHEYENNE-ARAPAHO TRIBES OF OKLAHOMA	123	2,038,243
CHICKASAW NATION	126	3,667,626
CHIPPEWA CREE TRIBE	138	2,460,888
CHITIMACHA TRIBE OF LOUISIANA	141	2,529,525
CHOCTAW NATION OF OKLAHOMA/JONES ACADEMY	144	6,268,339
CHUCACHIUT, INC.	149	1,819,593
CITIZEN POTAWATOMI NATION	156	992,281
COAST INDIAN COMMUNITY OF THE RESIGHINI RANCHERIA	161	151,469
COEUR D'ALENE TRIBE	164	3,116,653
COLORADO RIVER INDIAN TRIBES	167	1,635,403
COLUMBIA RIVER INTERTRIBAL FISH COMMISSION	1047	3,196,475
COMANCHE TRIBE OF OKLAHOMA	171	1,441,674
CONCOW MAIDU TRIBE OF MOORETOWN RANCHERIA	471	225,200
CONFEDERATED SALISH AND KOOTENAI TRIBES	173	9,803,091
CONFEDERATED TRIBES AND BANDS OF THE YAKAMA NATION	890	9,086,044
CONFEDERATED TRIBES OF COOS, LOWER UMPQUA, & SIUSL	174	637,323
CONFEDERATED TRIBES OF GRAND RONDE COMMUNITY OF OR	177	1,434,869
CONFEDERATED TRIBES OF SILETZ INDIANS OF OREGON	175	2,072,413
CONFEDERATED TRIBES OF THE CHEHALIS RESERVATION	114	941,154
CONFEDERATED TRIBES OF THE COLVILLE RESERVATION	176	9,809,752
CONFEDERATED TRIBES OF UMATILLA INDIAN RESERVATION	179	3,079,881
COOK INLET TRIBAL COUNCIL, INC.	181	1,551,039
COPPER RIVER NATIVE ASSOCIATION	183	1,624,840
COQUILLE INDIAN TRIBE	185	1,227,958

ATTACHMENT A.—RAMAH NAVAJO CHAPTER SETTLEMENT ADMINISTRATION—Continued

[Information on file for the base year amount for 1993; Appendix F paragraph 10(b)—Provisional List (part 1 of 2); Alphabetical order—by organization]

Tribe/Organization	Control No.	1993 BIA expenditures
COUSHATTA TRIBE OF LOUISIANA	191	540,290
COW CREEK BAND OF UMPQUA TRIBE OF INDIANS	193	503,712
CROW CREEK SIOUX TRIBE	198	1,389,634
CROW TRIBE OF INDIANS	200	1,635,528
DELAWARE TRIBE OF WESTERN OKLAHOMA	208	7,550
DUCKWATER SHOSHONE TRIBE	219	941,575
DULL KNIFE MEMORIAL COLLEGE	940	915,950
EASTERN BAND OF CHEROKEE	118	8,898,982
EASTERN SHAWNEE TRIBE OF OKLAHOMA	222	160,297
EASTERN SHOSHONE TRIBE	223	329,697
EIGHT NORTHERN INDIAN PUEBLOS COUNCIL	226	485,379
ELK VALLEY RANCHERIA	232	106,652
ELY SHOSHONE TRIBE	234	586,019
FAIRBANKS NATIVE ASSOCIATION	240	620,669
FALLON PAIUTE SHOSHONE TRIBE	241	1,187,735
FLANDREAU SANTEE SIOUX TRIBE	244	300,973
FOND DU LAC BAND OF LAKE SUPERIOR CHIPPEWA	246	3,603,978
FOREST COUNTY POTAWAOM COMMUNITY (A.K.A. FOREST	248	366,782
FORT BELKNAP TRIBAL COUNCIL	250	2,772,116
FORT BIDWELL INDIAN COMMUNITY OF PAIUTE INDIANS	251	99,167
FORT MCDOWELL YAVAPAI NATION	256	326,827
FORT MOJAVE INDIAN TRIBE	257	1,303,279
FORT PECK TRIBES	42	3,446,174
GILA RIVER INDIAN COMMUNITY	266	7,696,975
GRAND PORTAGE BAND OF OJIBWE	269	416,474
GRAND TRAVERSE BAND OF OTTAWA & CHIPPEWA INDIANS	270	2,043,822
GREAT LAKES FISH & WILDLIFE COMMISSION	1039	4,260,441
HANNAHVILLE INDIAN SCHOOL	280	4,313,522
HAVASUPAI TRIBE	284	1,733,262
HO-CHUNK NATION	286	449,947
HOH TRIBE	288	586,259
HOOPA VALLEY TRIBE	291	5,674,086
HOPI TRIBE	295	4,538,542
HOULTON BAND OF MALISEET INDIANS	299	683,317
HUALAPAI TRIBE	300	1,591,245
INTER-TRIBAL COUNCIL OF MICHIGAN	1055	188,131
IOWA TRIBE OF OKLAHOMA	320	487,421
JAMESTOWN S'KLALLAM TRIBE	327	1,939,626
JICARILLA APACHE TRIBE	332	1,220,639
JOINT BUSINESS COUNCIL SHOSHONE AND ARAPAHO TRIBE	716	3,282,171
KALISPEL TRIBE OF INDIANS	340	701,218
KARUK TRIBE OF CALIFORNIA	345	491,815
KAW NATION OF OKLAHOMA	349	422,937
KAWERAK INCORPORATED	350	3,542,620
KENAI VILLAGE (KENAITZE VILLAGE)	352	354,419
KETCHIKAN INDIAN CORPORATION (IRA)	353	2,043,122
KEWEENAW BAY INDIAN COMMUNITY	354	1,136,752
KIANA VILLAGE	356	34,772
KICKAPOO TRIBE IN KANSAS	359	677,978
KICKAPOO TRIBE OF OKLAHOMA	360	326,643
KIOWA TRIBE OF OKLAHOMA	365	1,200,128
KLAMATH GENERAL COUNCIL	369	2,694,361
KODIAK AREA NAVTIVE ASSOCIATION	373	617,159
KOOTENAI TRIBAL COUNCIL	378	336,745
KUSKOKWIM NATIVE ASSOCIATION	384	915,693
KWETHLUK VILLAGE (IRA)	385	217,724
KWIGILLINGOK VILLAGE (IRA)	386	59,677
LAC COURTE OREILLES TRIBAL GOVERNING BOARD	391	4,178,614
LAC DU FLAMBEAU BAND OF LAKE SUPERIOR CHIPPEWA IND	392	1,751,307
LAC VIEUX DESERT BAND OF LAKE SUPERIOR CHIPPEWA IN	393	666,756
LAS VEGAS PAUITE TRIBE	398	208,897
LEECH LAKE RESERVATION BUSINESS COMMITTEE/LEECH LA	401	7,238,032
LOWER BRULE SIOUX TRIBE	419	2,372,623
LOWER ELWHA COMMUNITY COUNCIL	420	1,805,497
LUMMI TRIBE OF THE LUMMI RESERVATION WASHINGTON	426	7,166,776
MAKAH TRIBAL COUNCIL	431	3,547,205
MANILAQ ASSOCIATION	435	1,296,256
MANZANITA BAND OF MISSION INDIANS	440	170,475
MASHANTUCKET PEQUOT TRIBE	445	570,218

ATTACHMENT A.—RAMAH NAVAJO CHAPTER SETTLEMENT ADMINISTRATION—Continued

[Information on file for the base year amount for 1993; Appendix F paragraph 10(b)—Provisional List (part 1 of 2); Alphabetical order—by organization]

Tribe/Organization	Control No.	1993 BIA expenditures
MENOMINEE INDIAN TRIBE OF WISCONSIN	450	7,318,025
MESA GRANDE BAND OF MISSION INDIANS	453	14,946
MESCALERO APACHE TRIBE	455	2,007,517
METLAKATLA INDIAN COMMUNITY	456	4,118,183
MIAMI TRIBE OF OKLAHOMA	459	87,088
MUCCOSUKEE TRIBE OF INDIANS OF FLORIDA	461	5,316,211
MILLE LACS BAND OF CHIPPEWA INDIANS (INCLUDES MILL	463	3,196,856
MINNESOTA CHIPPEWA TRIBAL EXECUTIVE COMMITTEE	464	2,847,198
MISSISSIPPI BAND OF CHOCTAW INDIANS	466	19,718,975
MOAPA BAND OF PAIUTES	467	256,303
MUCKLESHOOT TRIBAL COUNCIL	473	2,278,536
MUSCOGEE (CREEK) NATION OF OKLAHOMA	475	5,975,572
NARRAGANSETT INDIAN TRIBE	484	1,585,254
NAVAJO—TOHATCHI SPECIAL EDUCATION & TRAINING CEN	1044	1,144,290
NAVAJO AREA SCHOOL BOARD ASSOC., INC	1043	997,352
NAVAJO NATION	488	89,683,454
NAVAJO PREPARATORY SCHOOL, INC.	489	2,091,269
NEZ PERCE TRIBE	502	2,925,810
NINILCHIK VILLAGE	506	88,190
NISQUALLY INDIAN COMMUNITY COUNCIL	507	1,624,556
NOME ESKIMO COMMUNITY	511	723,663
NOOKSACK INDIAN TRIBE	515	626,090
NORTHERN ARAPAHO TRIBE	37	140,790
NORTHERN CHEYENNE TRIBAL SCHOOLS	518	1,518,429
NORTHERN CHEYENNE TRIBE	519	4,243,762
NORTHWEST INDIAN COLLEGE	983	1,802,390
NORTHESET INDIAN FISHERIES COMMISSION	521	4,672,570
NORTHWEST INTERTRIBAL COURT SYSTEM	1065	819,622
NORTHWESTERN BAND OF THE SHOSHONI NATION	522	294,918
OGLALA LAKOTA COLLEGE	917	2,634,108
OGLALA SIOX DEPT. OF PUBLIC SAFETY	1037	3,213,585
OGLALA SIOX PARKS & RECREATION AUTHORITY	1042	330,158
OGLALA SIOUX TRIBE	528	7,718,221
OMAHA TRIBE OF NEBRASKA	534	2,578,480
ONEIDA TRIBE OF INDIANS OF WISCONSIN	536	3,375,812
ORGANIZED VILLAGE OF KAKE	338	1,034,041
ORUTSARARMUIT NATIVE COUNCIL	66	960,258
OSAGE TRIBE OF INDIANS OF OKLAHOMA	540	556,425
OTOE-MISSOURIA TRIBE OF OKLAHOMA	542	589,598
PAIUTE INDIAN TRIBE OF UTAH	548	720,711
PASCUA YAQUI TRIBE OF ARIZONA	552	2,098,993
PASSAMAQUODDY TRIBE-PLEASANT POINT	555	1,441,729
PASSAMAQUODDY TRIBE-INDIAN TOWNSHIP	334	1,656,079
PAUMA BAND OF MISSION INDIANS	557	134,990
PAWNEE NATION OF OKLAHOMA	558	51,737
PENOBSCOT INDIAN NATION	561	2,630,292
PLEASEANT POINT SCHOOL/MAINE INDIAN EDUCATION	430	3,441,565
POARCH BAND OF CREEK INDIANS	584	1,809,323
POINT NO POINT TREATY COUNCIL	587	2,250,521
PONCA TRIBE OF OKLAHOMA	591	573,197
PORT GAMBLES S'KLALLAM TRIBE	593	1,782,476
PRAIRIE BAND OF POTAWATOMI INDIANS	599	576,990
PUEBLO DE SAN FELIPE	663	372,618
PUEBLO OF ACOMA	2	1,673,414
PUEBLO OF ISLETA	322	1,493,582
PUEBLO OF JEMEZ	330	474,655
PUEBLO OF LAGUNA	395	5,330,977
PUEBLO OF NAMBE	479	324,349
PUEBLO OF PICURIS	566	336,762
PUEBLO OF SANTA ANA	674	306,039
PUEBLO OF TAOS	778	1,575,756
PUELBO OF SANTA CLARA	603	1,085,182
PUYALLUP TRIBE OF INDIANS	604	4,346,464
PYRAMID LAKE PAIUTE TRIBAL COUNCIL	606	2,719,352
QUAPAW TRIBE OF OKLAHOMA	609	198,722
QUECHAN INDIAN TRIBE	611	1,837,056
QUILEUTE TRIBAL	612	2,561,532
QUINAULT INDIAN NATION	614	10,697,379
RAMAH NAVAJO SCHOOL BOARD INC	615	8,285,404

ATTACHMENT A.—RAMAH NAVAJO CHAPTER SETTLEMENT ADMINISTRATION—Continued

[Information on file for the base year amount for 1993; Appendix F paragraph 10(b)—Provisional List (part 1 of 2); Alphabetical order—by organization]

Tribe/Organization	Control No.	1993 BIA expenditures
RED CLIFF BAND OF LAKE SUPERIOR CHIPPEWA	621	1,069,878
RED LAKE BAND OF CHIPPEWAS INDIANS	623	4,393,457
REDDING RANCHERIA	629	199,816
RENO-SPARKS INDIAN COLONY	631	657,671
ROCK POINT COMMUNITY SCHOOL	638	4,039,611
ROSEBUD SIOUX TRIBE	641	5,689,843
SAC & FOX NATION OF OKLAHOMA	651	1,435,159
SAC AND FOX TRIBAL OF THE MISSISSIPPI IN IOWA	653	1,019,606
SAGINAW CHIPPEWA TRIBAL COUNCIL	655	1,112,858
SALISH KOOTENAI COLLEGE	998	2,520,842
SALT RIVER PIMA-MARICOPA INDIAN COMMUNITY	660	2,925,067
SAN CARLOS APACHE TRIBE	662	8,924,947
SAN JUAN PUEBLO TRIBAL COUNCIL	666	748,666
SAN JUAN SOUTHERN PAIUTE COUNCIL	667	380,267
SANTEE SIOUX TRIBE OF NEBRASKA	683	570,245
SAUK-SUIATTLE TRIBAL COUNCIL	685	187,567
SAULT STE, MARIE TRIBE OF CHIPPEWA INDIANS	686	3,186,096
SEMINOLE NATION OF OKLAHOMA	695	1,193,223
SEMINOLE TRIBE OF FLORIDA	696	4,830,423
SENECA NATION OF INDIANS	697	944,922
SENECA-CAYUGA TRIBE OF OKLAHOMA	698	327,036
SHERWOOD VALLEY BAND OF POMO INDIANS	706	73,250
SHOALWATER BAY INDIAN TRIBE	712	359,218
SHOSHONE-BANNOCK TRIBE	718	4,403,788
SHOSHONE-PALUTE TRIBES OF THE DUCK VALLEY INDIAN R	217	1,963,287
SINTE GLESKA UNIVERSITY	720	2,539,828
SISSETON-WAHPETON SCHOOL BOARD—TIOSPA ZINA TRIB	796	2,506,011
SISSETON-WAHPETON SIOUX TRIBE	721	2,715,330
SISSETON-WAHPETON SIOUX TRIBE	721	2,715,330
SITKA TRIBE OF ALASKA	722	1,878,699
SKAGIT SYSTEM COOPERATIVE	1071	1,118,489
SKOKOMISH INDIAN TRIBE	724	605,857
SKY PEOPLE EDUCATION COMMITTEE	1072	188,003
SOUTHERN UTE INDIAN TRIBE	740	3,132,581
SPIRIT LAKE TRIBE (FMA DEVILS LAKE SIOUX TRIBE)	741	1,334,823
SPOKANE TRIBE OF INDIANS	742	2,285,294
SQUAXIN ISLAND TRIBE	743	1,281,992
ST. STEPHENS INDIAN SCHOOL	746	2,403,284
ST. CROIX TRIBAL COUNCIL	747	884,179
ST. REGIS MOHAWK TRIBE	749	1,190,245
STANDING ROCK SIOUX TRIBE	752	6,148,190
STILLAGUAMISH TRIBE OF INDIANS	759	708,545
STOCKBRIDGE-MUNSEE COMMUNITY	760	476,759
SUMMIT LAKE PAIUTE TRIBE	764	271,909
SUQUAMISH TRIBE	765	2,188,253
SUSANVILLE INDIAN RANCHERIA	766	96,818
SWINOMISH INDIAN TRIBAL COMMUNITY	768	2,159,155
TANANA CHIEFS CONFERENCE	776	5,016,231
TE-MOAK TRIBE OF WESTERN SHOSHONE	786	794,024
THE CONFEDERATED TRIBES OF THE WARM SPRINGS RESERVATION	178	6,178,972
THE HOPI CREDIT ASSOCIATION	789	1,168,878
THE TORRES MARTINEZ DESERT CAHUILLA INDIANS	809	366,142
THREE AFFILIATED TRIBES OF NORTH DAKOTA	794	4,406,092
TOHONO O'ODHAM NATION	800	9,825,839
TOIYABE INDIAN HEALTH PROJECT, INC.	801	265,069
TONKAWA TRIBE OF OKLAHOMA	806	179,828
TULALIP TRIBES OF WASHINGTON	817	2,231,866
TULE RIVER INDIAN TRIBE	818	519,067
TUNICA-BILOXI INDIAN TRIBE OF LOUISIANA	820	583,456
TURTLE MOUNTAIN BAND OF CHIPPEWA	824	9,977,925
TURTLE MOUNTAIN COMMUNITY COLLEGE	825	1,689,949
UNITED SIOUX TRIBES	846	116,012
UNITED TRIBES TECHNICAL COLLEGE	847	3,683,524
UPPER SIOUX COMMUNITY	852	439,712
UPER SKAGIT TRIBAL COUNCIL	853	506,923
UTE INDIAN TRIBE-UINTAH & OURAY RESERVATION	854	1,016,724
UTE MOUNTAIN UTE TRIBE	855	6,672,883
VALDEZ NATIVE ASSOCIATION	856	58,510
WALKER RIVER PAIUTE TRIBE	864	1,410,644

ATTACHMENT A.—RAMAH NAVAJO CHAPTER SETTLEMENT ADMINISTRATION—Continued

[Information on file for the base year amount for 1993; Appendix F paragraph 10(b)—Provisional List (part 1 of 2); Alphabetical order—by organization]

Tribe/Organization	Control No.	1993 BIA expenditures
WAMPANOAG TRIBE OF GAY HEAD (AQUINNAH)	865	1,014,577
WASHOE TRIBE OF NEVADA AND CALIFORNIA	870	849,039
WHITE EARTH BAND OF CHIPPEWA INDIANS	875	3,999,788
WHITE MOUNTAIN APACHE	876	6,755,079
WICHITA AND AFFILIATED TRIBES	881	154,425
WINGATE BOARD OF EDUCATION, INC.	1033	675,420
WINNEBAGO TRIBE OF NEBRASKA	884	951,502
WYANDOTTE TRIBE OF OKLAHOMA	9889	170,656
YAKUTAT TLINGIT TRIBE/YAKUTAT NATIVE ASSOCIATION	892	467,486
YANKTON SIOUX TRIBE	893	769,742
YAVAPAI-PRESCOTT BOARD OF DIRECTORS	895	294,266
YERINGTON PAIUTE TRIBE	896	444,898
YOMBA SHOSHONE TRIBE	897	159,649
YSLETA DEL SUR PUEBLO	898	1,210,587
ZIA PUEBLO, AKA PUEBLO OF ZIA	901	190,764
ZUNI PUEBLO	902	4,134,997
Total BIA expenditures on file		654,470,924

Note: If 1993 BIA expenditure information existed in settlement administrator's files it is listed above. If no 1993 expenditure information exists in the settlement administor's files then your entity should be listed on part two to the provisional list. A school grantee's presence on this listing does not mean that you qualify as a member. Please see claim form.

ATTACHMENT A.—RAMAH NAVAJO CHAPTER SETTLEMENT ADMINISTRATION

[Settlement Administrator does not have any information on file for the base year amount for 1993; Appendix F paragraph 10(b)—Provisional list (part 2 of 2); Alphabetical order—by organization]

Tribe/Organization	Control No.
AFOGNAK NATIVE VILLAGE	3
AGDAAGUX TRIBE OF KING COVE	4
AGUA CALIENTE BAND OF CAHUILLA INDIANS	5
AHFACHKEE DAY SCHOOL	6
AHMIUM EDUCATION INC	7
AK CHIN INDIAN COMMUNITY	8
AK CHIN INDIAN COMMUNITY COUNCIL	9
AKHIOK VILLAGE	10
AKIAK NATIVE COMMUNITY (IRA)	12
AKUTAN VILLAGE	13
ALABAMA-QUASSARTE TRIBAL TOWN	15
ALAKANUK VILLAGE	16
ALAMO-NAVAJO INDIAN RESERVATION	18
ALASKA NATIVE FOUNDATION	1074
ALATNA VILLAGE	19
ALEKNAGIK VILLAGE	20
ALEUT COMMUNITY OF ST PAUL ISLAND	21
ALGAACIQ VILLAGE (AKA ST MARYS)	23
ALLAKAKET VILLAGE	25
ALSO' BIYA' AZH COMMUNITY SCHOOL (SHIPROCK ELEMENT	903
ALTURAS RANCHERIA	26
AMBLER VILLAGE	27
AMERICAN HORSE SCHOOL	904
AMERICAN INDIAN CENTER OF CENTRAL CALIFORNIA	28
AMERICAN INDIAN CHILD RESOURCE CENTER	29
ANAKTUVUK PASS VILLAGE	30
ANDREAFSKI VILLAGE	31
ANETH CHAPTER	32
ANETH COMMUNITY SCHOOL	905
ANGOON VILLAGE (IRA)	33
ANIAK VILLAGE	34
ANNETTE ISLAND-METLAKATLA INDIAN COMMUNITY	1045
ANVIK VILLAGE	35
APACHE TRIBE OF OKLAHOMA	36
ARCTIC VILLAGE	39
AROOSTOOK BAND OF MICMAC INDIANS	40
ASA'CARSARMIUT TRIBAL COUNCIL	41
ATKA VILLAGE (IRA)	44
ATMUATHLUAK VILLAGE	45
ATQASUK VILLAGE	46

ATTACHMENT A.—RAMAH NAVAJO CHAPTER SETTLEMENT ADMINISTRATION—Continued

[Settlement Administrator does not have any information on file for the base year amount for 1993; Appendix F paragraph 10(b)—Provisional list (part 2 of 2); Alphabetical order—by organization]

Tribe/Organization	Control No.
ATSA'BI'YAAZH COMMUNITY SCHOOL	47
AUBURN RANCHERIA	48
AUGUSTINE BAND OF MISSION INDIANS	49
AZTEC DOMITORY	906
BACA COMMUNITY SCHOOL	907
BACA/HAYSTACK CHAPTER	50
BAHWETING ANISHINABE SCHOOL	52
BARONA—CAPITAN GRANDE DIEGUENO TRIBE	53
BARROW VILLAGE	54
BATTLE MOUNTAIN BAND COUNCIL	55
BEADSPRINGS CHAPTER	57
BEAR RIVER BANK OF ROHNERVILLE RANCHERIA	58
BEATRICE RAFFERTY SCHOOL	59
BEAVER VILLAGE	60
BECENTI CHAPTER	61
BECLABITO CHAPTER	62
BECLABITO DAY SCHOOL	909
BELKOFSKI VILLAGE	63
BENTON PAIUTE RESERVATION	64
BENTON PAIUTE TRIBE	836
BERRY CREEK RANCHERIA OF MAIDU INDIANS	65
BIG SANDY RANCHERIA OF MONO INDIANS	69
BIG VALLEY RANCHERIA	70
BILL MOORE'S SLOUGH ELDER'S COUNCIL	71
BIRCH CREEK VILLAGE	72
BIRDSPRINGS CHAPTER	73
BLACK MESA CHAPTER	75
BLACK MESA COMMUNITY SCHOOL BOARD, INC	76
BLACKFEET COMMUNITY COLLEGE	910
BLACKFEET DORMITORY	911
BLACKWATER COMMUNITY SCHOOL	912
BODAWAY CHAPTER	80
BOIS FORTE RESERVATION BUSINESS COMMITTEE	81
BOQUE CHITTO ELEMENTARY SCHOOL	82
BREAD SPRINGS DAY SCHOOL	913
BREVIG MISSION VILLAGE	83
BRIDGEPORT PAIUTE INDIAN COLONY	84
BRISTOL BAY NATIVE ASSOCIATION	1046
BUCKLAND VILLAGE (IRA)	85
BUENA VISTA RANCHERIA OF MEWUK INDIANS	86
BUG-O-NAY-GE-SHIG SCHOOL	87
BURNHAM CHAPTER	88
BUTTE COUNTY OFFICE OF EDUCATION	90
CABAZON BAND OF MISSION INDIANS	91
CACHIL DEHE BAND OF WINTUN INDIANS	92
CAHTO INDIAN TRIBE	94
CALIFORNIA INDIAN MANPOWER CONSORTIUM, INC	180
CAMERON CHAPTER	96
CANKDESKA CIKANA COMMUNITY COLLEGE	914
CANONCITO CHAPTER	98
CANTWELL VILLAGE	99
CAPITAN GRANDE BAND OF MISSION INDIANS	100
CARSON COLONY COMMUNITY COUNCIL	101
CARTER SEMINARY	915
CASE BLANCA DAY SCHOOL	916
CASAMERO LAKE CHAPTER	102
CATAWBA INDIAN NATION	103
CATAWBA INDIAN TRIBE	104
CAYUGA NATION	105
CEDARVILLE RANCHERIA	106
CEDARVILLE RANCHERIA OF NORTHERN PAIUTE INDIANS	107
CENTRAL TRIBES OF THE SHAWNEE AREA INC	109
CENTRAL UNION ELEMENTARY SCHOOL DISTRICT	110
CHALKYITSIK VILLAGE	111
CHAWANAKEE JOINT UNITED SCHOOL DISTRICT	112
CHEFORNAK VILLAGE	113
CHEMAWA INDIAN SCHOOL	918
CHEMEHUEVI TRIBAL COUNCIL	115
CHENEGA IRA COUNCIL	116
CHEROKEE CENTRAL ELEMENTARY SCHOOL	119

ATTACHMENT A.—RAMAH NAVAJO CHAPTER SETTLEMENT ADMINISTRATION—Continued

[Settlement Administrator does not have any information on file for the base year amount for 1993; Appendix F paragraph 10(b)—Provisional list (part 2 of 2); Alphabetical order—by organization]

Tribe/Organization	Control No.
CHEROKEE CENTRAL HIGH SCHOOL	919
CHEVAK VILLAGE	121
CHEYENNE-EAGLE BUTTE SCHOOL	921
CHICHHILTAH CHAPTER	124
CHI-CH'IL'TAH/JONES RANCH COMMUNITY SCHOOL	922
CHICKALOON NATIVE VILLAGE	125
CHICKEN RANCH BAND OF ME-WUK INDIANS	127
CHICO RANCHERIA	128
CHIEF LESCHI SCHOOL SYSTEM (PUYALLUP)	129
CHIGNIK LAGOON VILLAGE	130
CHIGNIK LAKE VILLAGE	131
CHIGNIK VILLAGE	132
CHILCHINBETO COMMUNITY SCHOOL, INC. (FKA CHILCHINB	923
CHILKAT INDIAN VILLAGE (IRA)	133
CHILKOOT INDIAN ASSN (IRA)	134
CHINIK ESKIMO COMMUNITY	135
CHINLCHINBETO CHAPTER	136
CHINLE BOARDING SCHOOL	924
CHINLE CHAPTER	137
CHISTOCHINA VILLAGE	139
CHITIMACHA DAY SCHOOL	140
CHITINA VILLAGE	142
CHOCTAW CENTRAL HIGH SCHOOL	925
CHOCTAW CENTRAL MIDDLE SCHOOL	143
CHOTAW CENTRAL HIGH SCHOOL	145
CHOTAW FIELD OFFICE	146
CHUATHBALUK VILLAGE	147
CHUGACH REGIONAL RESC COMMISSION	148
CHULOONAWICK NATIVE VILLAGE	150
CHURCH ROCK CHAPTER	151
CHUSKA COMMUNITY SCHOOL	926
CIBECUE COMMUNITY EDUCATION BOARD, INC	152
CIKANA COMMUNITY COLLEGE (formerly Little Hoop)	1072
CIRCLE NATIVE COMMUNITY (IRA)	153
CIRCLE OF LIFE SURVIVAL SCHOOL	154
CIRCLE OF NATIONS SCHOOL	155
CLARKS POINT VILLAGE	157
CLOVERDALE RANCHERIA OF POMO INDIANS	158
CLOVIS UNIFIELD SCHOOL DISTIRCT	159
COALMINE MESA CHAPTER	160
COCHITI PUEBLO	162
COCOPAH TRIBAL COUNCIL	163
COEUR D'ALENE TRIBAL SCHOOL	165
COLD SPRINGS RANCHERIA OF MONO INDIANS	166
COLUSA COUNTY OFFICE OF EDUCATION	168
COLUSA RANCHERIA	169
COLVILLE BUSINESS COUNCIL	170
CONEHATTA ELEMENTARY SCHOOL	172
CONFEDERATED TRIBES OF THE GOSHUTE RESERVATION	268
COPPER CENTER VILLAGE	182
COPPERMINE	184
CORNFIELDS CHAPTER	186
CORTINA BAND OF WINTUN INDIANS	187
COTTONWOOD DAY SCHOOL	928
COUNCIL VILLAGE	188
COUNSELOR CHAPTER	189
COUNTY INDIAN HEALTH INC	190
COVE CHAPTER	192
COVE DAY SCHOOL	929
COVELO INDIAN COMMUNITY COLLEGE/ROUND VALLEY RESER	1049
COVELO INDIAN COMMUNITY COUNCIL	1050
COYOTA VALLEY RESERVATION	630
COYTE CANYON	194
COYOTE VALLEY TRIBAL COUNCIL	195
CRAIG COMMUNITY ASSN (IRA)	196
CRAZY HORSE SCHOOL	930
CROOKED CREEK VILLAGE	197
CROW CREEK RESERVATION HIGH SCHOOL	931
CROW CREEK SIOUX TRIBAL ELEMENTARY SCHOOL	932
CROW CREEK SIIOUX TRIBAL HIGH SCHOOL & CROW CREEK S	199

ATTACHMENT A.—RAMAH NAVAJO CHAPTER SETTLEMENT ADMINISTRATION—Continued

[Settlement Administrator does not have any information on file for the base year amount for 1993; Appendix F paragraph 10(b)—Provisional list (part 2 of 2); Alphabetical order—by organization]

Tribe/Organization	Control No.
CROWNPOINT CHAPTER	201
CRYSTAL BOARDING SCHOOL	933
CRYSTAL CHAPTER	202
CUDELL CHAPTER	203
CURYUNG TRIBAL COUNCIL	204
CUYAPAIPE BAND OF MISSION INDIANS	205
DAKOTA PLAINS INSTITUTE OF LEARNING	1051
DEERING VILLAGE (IRA)	206
DELAWARE TRIBE OF INDIANS OF EAST OK	207
DELAWARE TRUST BOARD	209
DENNEHOTSO BOARDING SCHOOL	934
DENNEHOTSO CHAPTER	210
DIBE YAZHI HABITIIN OLTA, INC. (BORREGO, PASS)	935
DILCON BOARDING SCHOOL	936
DILKON CHAPTER	211
DILLINGHAM VILLAGE	212
DINE COLLEGE	937
DIOMEDE VILLAGE (IRA)	213
DLO'AY AZHI COMMUNITY SCHOOL (THOREAU)	938
DOT LAKE VILLAGE	214
DOUGLAS INDIAN ASSN (IRA)	215
D–Q UNIVERSITY	939
DRY CREEK RANCHERIA	216
DUCKWATER SHOSHONE ELEMENTARY SCHOOL	218
DZILTH-NA-O-DITH-HLE COMMUNITY SCHOOL	941
EAGLE VILLAGE COUNCIL	220
EASTERN BAND OF CHEROKEE INDIANS	221
EEDA CONSORTIUM OF TRIBES	1052
EEK VILLAGE	224
EGEGIK VILLAGE	225
EKLUTNA VILLAGE	227
EKUK VILLAGE	228
EKWOK VILLAGE	229
ELEM INDIAN COLONY OF POMO INDIANS	230
ELIM VILLAGE (IRA)	231
ELKO BANK COUNCIL	233
EMMONAK VILLAGE	235
ENEMY SWIM DAY SCHOOL	236
ENTERPRISE RANCHERIA OF ESTOM YUMEKA MAIDU	237
EUFAULA DORMITORY	942
EVANSVILLE VILLAGE	238
FALSE PASS VILLAGE	242
FIVE SANDOVAL INDIAN PUEBLO, INC.	1075
FLAGSTAFF BORDERTOWN DORMITORY	243
FLANDREAU INDIAN BOARDING SCHOOL	943
FOND DU LAC BANK OF LAKE SUPERIOR CHIPPEWA	245
FOND DU LAC RESERVATION BUSINESS COMMITTEE	247
FOND DU LAC TRIBAL & COMMUNITY COMMUNITY COLLEGE	944
FOREST LAKE CHAPTER	249
FORT BELKNAP COMMUNITY COLLEGE	945
FORT BELKNAP INDIAN COMMUNITY GROS VENTRE & ASSINI	276
FORT BERTHOLD COMMUNITY COLLEGE	946
FORT DEFIANCE CHAPTER	252
FORT HALL BUSINESS COUNCIL	253
FORT INDEPENDENCE PAIUTE INDIAN COMMUNITY	254
FORT MCDERMITT TRIBAL COUNCIL	255
FORT PECK COMMUNITY COLLEGE	947
FORT PECK TRIBAL EXECUTIVE BOARD	258
FORT SILL APACHE TRIBE OF OKLAHOMA	259
FOUR WINDS ELEMENTARY (TATE TOPA TRIBAL SCHOOL)	779
GAKONA VILLAGE COUNCIL	261
GALENA VILLAGE	262
GAMBELL VILLAGE	263
GANADO CHAPTER	264
GEORGETOWN VILLAGE	265
GILA CROSSING DAY SCHOOL	948
GRAYLING VILLAGE (IRA) (HOLIKACHUK)	271
GREASEWOOD SPRINGS COMMUNITY SCHOOL INC	272
GREAT LAKES INTER-TRIBAL COUNCIL	1053
GREENVILLE RANCHERIA OF MAIDU INDIANS	273

ATTACHMENT A.—RAMAH NAVAJO CHAPTER SETTLEMENT ADMINISTRATION—Continued

[Settlement Administrator does not have any information on file for the base year amount for 1993; Appendix F paragraph 10(b)—Provisional list (part 2 of 2); Alphabetical order—by organization]

Tribe/Organization	Control No.
GREYHILLS ACADEMY HIGH SCHOOL	274
GRINDSTONE INDIAN RANCHERIA OR WINTUN-NOMOLAKI	275
GUIDIVILLE BANK OF POMO INDIANS	277
GULKANA VILLAGE COUNCIL	278
HAMILTON VILLAGE	279
HANNAHVILLE INDIAN COMMUNITY COUNCIL	281
HARD ROCK CHAPTER	282
HASKELL INDIAN NATIONS UNIVERSITY	949
HAVASUPAI SCHOOL	283
HEALY LAKE VILLAGE	285
HOGBACK CHAPTER	287
HOLBROOK DORMITORY	950
HOLY CROSS VILLAGE	289
HOONAH INDIAN ASSN (IRA)	290
HOOPER BAY VILLAGE	292
HOPI CREDIT ASSOCIATION	1054
HOPI DAY SCHOOL	951
HOPI DAY SCHOOL	293
HOPI HIGH SCHOOL	294
HOPLAND BAND OF POMO INDIANS	296
HOTEVILLA BACAVI COMMUNITY SCHOOL	297
HOUCK CHAPTER	298
HUERFANO CHAPTER	301
HUERFANO DORMITORY	952
HUGHES VILLAGE	302
HUNTERS POINT BOARDING SCHOOL	953
HURON POTAWATOMI INC	303
HUSLIA VILLAGE	304
HYDABURG COOPERATIVE ASSN (IRA)	305
IGIUGIG VILLAGE	306
ILIAMNA VILLAGE	307
INAJA-COSMIT BAND OF MISSION INDIANS	308
INDIAN CHILD & FAMILY SERVICES	309
INDIAN HEALTH COUNCIL INC	310
INDIAN ISLAND SCHOOL	311
INDIAN TOWNSHIP SCHOOL	312
INDIAN TOWNSHIP SCHOOL	954
INDIAN TOWNSHIP—PASSAMAQUODDY	313
INDIAN WELLS CHAPTER	314
INSCRIPTION HOUSE CHAPTER	315
INTER-TRIBAL COUNCIL OF CA INC	316
INTER-TRIBAL COUNCIL OF OKLAHOMA	1056
INUPIAT COMMUNITY OF ARCTIC SLOPE (IRA)	317
IONE BAND OF MIWOK INDIANS	318
IOWA TRIBE OF KANSAS-NEBRASKA	319
IQURMUIT VILLAGE (RUSSIAN MISSION)	321
ISLETA ELEMENTARY SCHOOL	955
IVANOF BAY VILLAGE	323
IYANBITO CHAPTER	324
JACKSON BAND OF MI-WUK INDIANS	325
JACKSON RANCHERIA	326
JAMUL INDIAN VILLAGE	328
JEDDITO CHAPTER	329
JEMEZ DAY SCHOOL	956
JENA BAND OF CHOCTAWS	331
JICARILLA DORMITORY	333
JOHN F. KENNEDY DAY SCHOOL	957
JONES ACADEMY	958
KAGUYAK VILLAGE	335
KAIBAB-PAIUTE TRIBAL COUNCIL	336
KAIBETO BOARDING SCHOOL	959
KAIBETO CHAPTER	337
KAKTOVIK VILLAGE	339
KALTAG VILLAGE	342
KANATAK NATIVE VILLAGE	343
KARLUK VILLAGE (IRA)	344
KASHIA BAND OF POMO INDIANS	347
KASIGLUK VILLAGE	348
KAYENTA BOARDING SCHOOL	960
KAYENTA CHAPTER	351

ATTACHMENT A.—RAMAH NAVAJO CHAPTER SETTLEMENT ADMINISTRATION—Continued

[Settlement Administrator does not have any information on file for the base year amount for 1993; Appendix F paragraph 10(b)—Provisional list (part 2 of 2); Alphabetical order—by organization]

Tribe/Organization	Control No.
KEAMS CANYON BOARDING SCHOOL	961
KIALEGEE TRIBAL TOWN	355
KIAWOCK CORPORATIVE ASSN (IRA)	357
KICKAPOO NATION SCHOOL	962
KICKAPOO TRADITIONAL TRIBE OF TEXAS	358
KING COVE VILLAGE	361
KING ISLAND NATIVE COMMUNITY (IRA)	362
KINGS CANYON UNIFIED SCHOOL DISTRICT	363
KINLICHEE BOARDING SCHOOL	963
KINLICHEE CHAPTER	364
KIPNUK VILLAGE	366
KLAGETOH CHAPTER	368
KLAWOCK COOPERATIVE ASSN (IRA)	370
KNIK VILLAGE	371
KOBUK VILLAGE	372
KODIAK TRIBAL COUNCIL	374
KOKHANOK VILLAGE	375
KOLIGANEK VILLAGE	376
KONGIGANAK VILLAGE	377
KOTLIK TRADITIONAL COUNCIL	379
KOYUKUK VILLAGE	382
KUIGPAGMIUT INC	383
KWINHAGAK VILLAGE (IRA) (AKA QUINHAGAK)	387
LA JOLLA BAND OF INDIANS	388
LA JOLLA BAND OF LUISENO INDIANS	753
LA POSTA BAND OF MISSION INDIANS	389
LAC COURTE OREILLES INDIAN RESERVATION	390
LAC COURTE OREILLES OJIBWA COMMUNITY COLLEGE	964
LAGUNA ELEMENTARY SCHOOL	965
LAGUNA MIDDLE SCHOOL	394
LAKE VALLEY CHAPTER	396
LAKE VALLEY NAVAJO SCHOOL	966
LARSEN BAY VILLAGE	397
LAYTONVILLE RANCHERIA	399
LECHEE CHAPTER	400
LEECH LAKE TRIBAL COLLEGE	967
LEISNOI VILLAGE (AKA WOODY ISLAND)	402
LEUPP CHAPTER	403
LEUPP SCHOOLS INC.	404
LEUPP SCHOOLS, INCORPORATED	968
LEVELOCK VILLAGE	405
LIME VILLAGE	406
LITTLE BIG HORN COLLEGE	969
LITTLE EAGLE DAY SCHOOL	970
LITTLE PRIEST TRIBAL COLLEGE	971
LITTLE RIVER BAND OF OTTAWA INDIANS INC	407
LITTLE SINGER COMMUNITY SCHOOL, INC	408
LITTLE TRAVERSE BAY BANDS OF ODAWA INDIANS	409
LITTLE WATER CHAPTER	410
LITTLE WOUND SCHOOL	411
LOCAL INDIAN EDUCATION COMMITTEE, INC.	1058
LONE PINE RESERVATION	412
LONEMAN DAY SCHOOL	413
LOS COYOTES BAND OF INDIANS	414
LOUDEN TRIBAL COUNCIL	415
LOVELOCK TRIBAL COUNCIL	416
LOW MOUNTAIN	417
LOW MOUNTAIN BOARDING SCHOOL	972
LOWER BRULE DAY SCHOOL	418
LOWER GREASEWOOD CHAPTER	421
LOWER KALSKAG VILLAGE	422
LOWER SIOUX INDIAN COMMUNITY COUNCIL	423
LOWER SIOUX INDIAN COMMUNITY OF MINNESOTA	424
LUKACHUKAI BOARDING SCHOOL	973
LUKACHUKAI CHAPTER	425
LUMMI COMMUNITY COLLEGE	1059
LUMMI TRIBAL SCHOOL SYSTEM	427
LUPTON CHPTER	428
LYTTON BAND OF POMO INDIANS	429
MAKAH TRIBE	432

ATTACHMENT A.—RAMAH NAVAJO CHAPTER SETTLEMENT ADMINISTRATION—Continued

[Settlement Administrator does not have any information on file for the base year amount for 1993; Appendix F paragraph 10(b)—Provisional list (part 2 of 2); Alphabetical order—by organization]

Tribe/Organization	Control No.
MANCHESTER-POINT ARENA BAND OF POMO INDIANS	433
MANDAREE DAY SCHOOL	434
MALEY HOT SPRINGS VILLAGE	436
MAOKOTAK VILLAGE	437
MANUELITO CHAPTER	438
MANY FARMS CHAPTER	439
MANY FARMS HIGH SCHOOL	974
MARIANO LAKE CHAPTER	441
MARIANO LAKE COMMUNITY SCHOOL	975
MARSHALL VILLAGE	442
MARTY INDIAN SCHOOL	443
MARYSVILLE JOINT UNION SCHOOL DISTRICT	444
MC GRATH NATIVE VILLAGE	446
MECHOOPDA INDIAN TRIBE	447
MEDICINE CREEK TRIBAL COLLEGE	976
MEKORYUK VILLAGE (IRA)	448
MENOMINEE FORESTRY CENTER	449
MENOMINEE TRIBAL SCHOOL	451
MENTASTA LAKE VILLAGE	452
MESCALERO APACHE SCHOOL	454
MEXICAN SPRINGS CHAPTER	457
MICCOSUKEE INDIAN SCHOOL	460
MIDDLETOWN RANCHERIA OF POMO INDIANS	462
MINTO VILLAGE (IRA)	465
MODOC TRIBE OF OKLAHOMA	468
MOENCOPI DAY SCHOOL	977
MOHAVE-APACHE COMMUNITY COUNCIL	469
MOHEGAN TRIBE OF INDIANS OF CONNECTICUT	470
MORONGO BAND OF MISSION INDIANS	472
MUCKLESHOOT TRIBAL SCHOOL	474
NAGEEZI CHAPTER	476
NAHODISHGISH/DALTON PASS CHAPTER	477
NAKNEK VILLAGE	478
NA'NEELZHIIN JI'OLTA (TORREON)	978
NANWALEK VILLAGE (IRA)	480
NAPAIMUTE VILLAGE	481
NAPAKIAK VILLAGE (IRA)	482
NAPASKIAK VILLAGE	483
NASCHITTI CHAPTER	485
NATIVE AMERICAN FAMILY SERVICES INC	486
NATIVE AMERICAN FISH & WILDLIFE SOCIETY	1061
NATIVE VILLAGE OF EYAK	239
NATIVE VILLAGE OF FORT YUKON	260
NATIVE VILLAGE OF GOODNEWS BAY	267
NATIVE VILLAGE OF KALSKAG	341
NATIVE VILLAGE OF KIVALINA	367
NATIVE VILLAGE OF KOTZEBUE (KOTZEBUE VILLAGE (IRA)	380
NATIVE VILLAGE OF KOYUK (IRA)	381
NATIVE VILLAGE OF POINT LAY (IRA)	586
NATIVE VILLAGE OF PORT LIONS	596
NATIVE VILLAGE OF SAVOONGA IRA	687
NATIVE VILLAGE OF SOUTH NAKNEK, SOUTH NAKNEK VILLA	736
NAVAJO MISSION ACADEMY	1062
NAVOJO MOUNTAIN	487
NAVAJO MOUNTAIN COMMUNITY SCHOOL	979
NATIVE VILLAGE OF KASAAN (IRA)	346
NATIVE VILLE OF SHAKTOOLIK (IRA)	702
NAY-AH-SHING SCHOOL	490
NAZJINI BOARDING SCHOOL	980
NAZLINI CHAPTER	491
NEBRASKA INDIAN COMMUNITY COLLEGE	981
NELSON LAGOON VILLAGE	492
NENAHNEZAD COMMUNITY SCHOOL	982
NENAHNEZAH CHAPTER	493
NENANA NATIVE COUNCIL	494
NEW KOLIGANEK VILLAGE COUNCIL	496
NEW LANDS (HAHATHDZILL) CHAPTER	497
NEW STUYAHOK VILLAGE	498
NEWCOMB CHAPTER	499
NEWHALEN VILLAGE	500

ATTACHMENT A.—RAMAH NAVAJO CHAPTER SETTLEMENT ADMINISTRATION—Continued

[Settlement Administrator does not have any information on file for the base year amount for 1993; Appendix F paragraph 10(b)—Provisional list (part 2 of 2); Alphabetical order—by organization]

Tribe/Organization	Control No.
NEWTOK VILLAGE	501
NIGHTMUTE VILLAGE	503
NIKOLAI VILLAGE	504
NIKOLSKI VILLAGE (IRA)	505
NOATAK VILLAGE (IRA)	508
NOLI SCHOOL	509
NOME ESKIMO COMMUNITY	510
NONDALTON VILLAGE	512
NOOKSACK INDIAN TRIBAL COUNCIL	513
NOORVIK VILLAGE (IRA)	514
NORTH FORK RANCHERIA OF MONO INDIANS	516
NORTH PACIFIC RIM	1064
NORTHERN PUEBLOS TRIBUTARY WATER RIGHTS ASSOC.	517
NORTHWAY VILLAGE	520
NOTTAWASEPPI HURON POTAWATOMI BAND	523
NOY-AH-SHING SCHOOL	984
NUIQSUT VILLAGE	524
NULATO VILLAGE	525
NUNAPITCHUK VILLAGE (IRA)	526
OAK/PINE SPRINGS CHAPTER	527
OHKAY OWINGETH COMMUNITY SCHOOL (SAN JUAN)	985
OHOGAMIUT VILLAGE	529
OJIBWA INDIAN SCHOOL	530
OJO ENCINO CHAPTER	531
OJO ENCINO DAY SCHOOL	986
OLD HARBOR VILLAGE	532
OLJATO CHAPTER	533
ONEIDA INDIAN NATION OF NEW YORK	535
ONEIDA TRIBAL SCHOOL	537
ONONDAGA NATION	538
ORUTSARARMUIT NATIVE COUNCIL	539
OSCARVILLE VILLAGE	541
OTOE MISSOURIA TRIBE OF OKLAHOMA	1060
OTTAWA TRIBE OF OKLAHOMA	543
OUZINKIE VILLAGE	544
OWENS VALLEY CAREER DEVELOP CENTER	545
OWENS VALLEY INDIAN WATER COMMISSION	546
PAIMIUT VILLAGE	547
PAIUTE-SHOSHONE INDIANS OF THE LONE PINE COMMUNITY	549
PALA BAND OF MISSION INDIANS	550
PASCHAL SHERMAN INDIAN SCHOOL	551
PASKENTA BAND OF NOMELAKI INDIANS	553
PASSAMAQUODDY TRIBE—INDIAN TOWNSHIP	554
PAULOFF HARBOR VILLAGE	556
PEARL RIVER ELEMENTARY SCHOOL	987
PECHANGA BAND OF LUSIENO MISSION INDIANS	559
PEDRO BAY VILLAGE	560
PEORIA TRIBE OF INDIANS OF OKLAHOMA	562
PERRYVILLE VILLAGE (IRA)	563
PETERSBURY INDIAN ASSN (IRA)	564
PICAYUNE RANCHERIA OF CHUKCHANSI INDIANS	565
PIERRE INDIAN LEARNING CENTER	567
PILOT POINT VILLAGE	568
PILOT STATION VILLAGE	569
PINE DALE CHAPTER	570
PINE HILL DAY SCHOOL	571
PINE HILL SCHOOL	988
PINE RIDGE SCHOOL	989
PINE SPRINGS COMMUNITY SCHOOL	990
PINOLEVILLE BAND OF POMO INDIANS	572
PINON CHAPTER	573
PINON COMMUNITY SCHOOL BOARD INC	574
PINON DORMITORY	991
PIT RIVER TRIBE OF CALIFORNIA	575
PIT RIVER TRIBE OF CALIFORNIA—BIG BEND	576
PIT RIVER TRIBE OF CALIFORNIA—LIKELY	577
PIT RIVER TRIBE OF CALIFORNIA—LOOKOUT	578
PIT RIVER TRIBE OF CALIFORNIA—MONTGOMERY CREEK	579
PIT RIVER TRIBE OF CALIFORNIA—ROARING CREEK	580
PIT RIVER TRIBE OF CALIFORNIA—XL	581

ATTACHMENT A.—RAMAH NAVAJO CHAPTER SETTLEMENT ADMINISTRATION—Continued

[Settlement Administrator does not have any information on file for the base year amount for 1993; Appendix F paragraph 10(b)—Provisional list (part 2 of 2); Alphabetical order—by organization]

Tribe/Organization	Control No.
PITKA'S POINT VILLAGE	582
PLATINUM TRADITIONAL VILLAGE	583
POINT HOPE VILLAGE (IRA)	585
POJOAQUE PUEBLO	588
POKAGON BAND OF POTAWATOMI INDIANS OF MICHIGAN	589
POLACCA DAY SCHOOL	992
PONCA TRIBE OF NEBRASKA	590
PORCUPINE SCHOOL	592
PORT GRAHAM VILLAGE COUNCIL	594
PORT HEIDEN VILLAGE	595
PORTAGE CREEK VILLAGE	597
POTTER VALLEY RANCHERIA OF POMO INDIANS	598
PRAIRIE ISLAND COMMUNITY COUNCIL	600
PUEBLO PINTADO	602
PUEBLO PINTADO COMMUNITY SCHOOL	993
PYRAMID LAKE HIGH SCHOOL	605
QAGUN TAYAGUNGIN SAND POINT	607
QAWALANGIN TRIBE (OF UNALASKA)	608
QUARTZ VALLEY INDIAN RESERVATION	610
QUILEUTE TRIBAL SCHOOL	613
QUTEKCAK NATIVE TRIBE	1041
RAMAH-NAVAJO CHAPTER	616
RAMONA	617
RAMONA BAND OF MISSION INDIANS	618
RAMPART VILLAGE	619
REAL RIVER ELEMENTARY SCHOOL	620
RED DEVIL VILLAGE	622
RED HORSE LODGE	1067
RED LAKE CHAPTER	624
RED MESA CHAPTER	625
RED MESA TRADING POST #1019	458
RED ROCK CHAPTER	626
RED ROCK DAY SCHOOL	994
RED SCAFFOLD SCHOOL	1068
RED VALLEY CHAPTER	627
RED WATER ELEMENTARY SCHOOL	628
RESERVATION FIRE PROTECTION DISTRICT	632
RICHFIELD RESIDENTIAL HALL, INC.	633
RINCON BAND OF LUISENO INDIANS	634
RIVERSIDE INDIAN SCHOOL	995
ROBINSON RANCHERIA	635
ROBINSON RANCHERIA	636
ROCK CREEK DAY SCHOOL	996
ROCK POINT CHAPTER	637
ROCK SPRINGS CHAPTER	639
ROCKY BOYS SCHOOL	1069
ROCKY RIDGE BOARDING SCHOOL	997
ROSEBUD DORMITORIES	640
ROSELAND SCHOOL DISTRICT	642
ROUGH ROCK CHAPTER	643
ROUGH ROCK SCHOOL BOARD, INC.	644
ROUND ROCK CHAPTER	645
ROUND VALLEY TRIBES	646
ROUNDHOUSE COUNCIL	647
RUBY VILLAGE	648
RUMSEY INDIAN RANCHERIA	649
SAC & FOX SETTLEMENT SHCOOL	650
SAC AND FOX NATION OF MISSOURI IN KS AND NE	652
SAC AND FOX TRIBE OF THE MISSISSIPPI IN IOWA	654
SAINT GEORGE VILLAGE	656
SAINT MICHAEL VILLAGE (IRA)	657
SAINT PAUL VILLAGE	658
SALAMATOF VILLAGE	659
SALT RIVER DAY SCHOOL	999
SAMISH TRIBE OF INDIANS	661
SAN FELIPE PUEBLO ELEMENTARY SCHOOL	1000
SAN ILDEFONSO DAY SCHOOL	1001
SAN ILDEFONSO PUEBLO	664
SAN JUAN CHAPTER	665
SAN LORENZO UNIFIED SCHOOL DISTRICT	668

ATTACHMENT A.—RAMAH NAVAJO CHAPTER SETTLEMENT ADMINISTRATION—Continued

[Settlement Administrator does not have any information on file for the base year amount for 1993; Appendix F paragraph 10(b)—Provisional list (part 2 of 2); Alphabetical order—by organization]

Tribe/Organization	Control No.
SAN MANUEL BAND OF MISSION INDIANS	669
SAN PASQUAL BAND OF MISSION INDIANS	670
SAN SIMON SCHOOL	1002
SAN XAVIER DISTRICT OF THE TOHONO O'ODHAM NATION	671
SANDIA PUEBLO	672
SANOSTEE CHAPTER	673
SANOSTEE DAY SCHOOL	1003
SANTA CLARA PUEBLO	675
SANTA CLARA PUEBLO	1004
SANTA CLARA UNIFIED SCHOOL DISTRICT	676
SANTA FE INDIAN SCHOOL, INC.	677
SANTA ROSA BAND OF CAHUILLA INDIANS	678
SANTA ROSA BOARDING SCHOOL	1005
SANTA ROSA INDIAN COMMUNITY	679
SANTA ROSA RANCH SCHOOL	1006
SANTA YNEZ BAND OF MISSION INDIANS	680
SANTA YNEZ INDIAN HEALTH CLINIC	681
SANTA YSABEL BAND OF DIEGUENO INDIANS	682
SANTO DOMINGO TRIBE	684
SAWMILL CHAPTER	688
SAXMAN VILLAGE (IRA)	689
SCAMMON BAY VILLAGE	690
SCOTTS VALLEY BAND OF POMO INDIANS	691
SEBA DALKAI BOARDING SCHOOL	1007
SECOND MESA DAY SCHOOL	692
SELAWIK VILLAGE (IRA)	693
SELDOVIA VILLAGE TRIBE	694
SEQUOYAH HIGH SCHOOL	1008
SHAGELUK VILLAGE (IRA)	699
SHAKOPEE MDEWAKANTON SIOUX COMMUNITY	700
SHAKOPEE SIOUX BUSINESS COUNCIL	701
SHEEP RANCH BAND OF ME-WUK INDIANS	703
SHEEPSPRINGS CHAPTER	704
SHELDON POINT VILLAGE	705
SHINGLE SPRINGS RANCHERIA	707
SHIPROCK CHAPTER	708
SHIPROCK DIRECTOR OF EDUCATION	1038
SHIPROCK NORTHWEST HIGH SCHOOL	709
SHIPROCK RESERVATION DORMITORY	710
SHISHMAREF VILLAGE (IRA)	711
SHO-BAN SCHOOL DISTRICT NO. 512	713
SHONTO CHAPTER	714
SHONTO PREPARATORY SCHOOL	715
SHOSHONE PAIUTE BUSINESS COUNCIL	717
SHUNGNAK VILLAGE (IRA)	719
SINTE GLESKA UNIVERSITY	1009
SIOUX CITY INDIAN EDUCATION COMMITTEE	1070
SISSETON WAHPETON COMMUNITY COLLEGE	1010
SITTING BULL COIMMUNITY COLLEGE (formerly Standing Rock)	1073
SITTING BULL COLLEGE	1011
SKAGWAY TRADITIONAL COUNCIL	723
SKULL VALLEY BAND OF GOSHUTE INDIANS	725
SKULL VALLEY GENERAL COUNCIL	726
SKY CITY COMMUNITY SCHOOL	1012
SLEETMUTE VILLAGE	727
SMITH LAKE CHAPTER	728
SMITH RIVER RANCHERIA OF CALIFORNIA	729
SOBOBA BAND OF MISSION INDIANS	730
SOBOBO BAND OF MISSION INDIANS	731
SOKAOGON CHIPPEWA TRIBAL COUNCIL	732
SOLOMON TRADITIONAL COUNCIL	733
SOLOMON VILLAGE	734
SOUTH FORK BAND COUNCIL	735
SOUTHERN CALIFORNIA INDIAN CENTER	737
SOUTHERN CALIFORNIA TRIBAL CHAIRMAN'S ASSOCIATION	738
SOUTHERN INDIAN HEALTH COUNCIL INC	1013
SOUTHWESTERN INDIAN POLYTECHNIC INSTITUTE	1013
ST. GEORGE ISLAND	745
ST. FRANCIS INDIAN SCHOOL	744
ST. MICHAELS ASSOCIATION FOR SPECIAL EDUCATION, IN	748

ATTACHMENT A.—RAMAH NAVAJO CHAPTER SETTLEMENT ADMINISTRATION—Continued

[Settlement Administrator does not have any information on file for the base year amount for 1993; Appendix F paragraph 10(b)—Provisional list (part 2 of 2); Alphabetical order—by organization]

Tribe/Organization	Control No.
STANDING PINE ELEMENTARY SCHOOL	750
STANDING ROCK CHAPTER	751
STANDING ROCK COMMUNITY SCHOOL	1014
STEAMBOAT	754
STEBBINS VILLAGE (IRA)	755
STEVENS VILLAGE (IRA)	756
STEWART COMMUNITY COUNCIL	757
STEWART POINT RANCHERIA	758
STOCKTON UNIFIED SCHOOL DISTRICT	761
STONE CHILD COMMUNITY COLLEGE	1015
STONEY RIVER VILLAGE	762
SUMMERVILLE ELEMENTARY SCHOOL	763
SWEETWATER CHAPTER	767
SYCUAN BAND OF MISSION INDIANS	769
TABLE BLUFF RESERVATION OF WIYOT INDIANS	770
TABLE MOUNTAIN RANCHERIA	771
TACHEE/BLUE GAP CHAPTER	772
TAKINA SCHOOL	773
TAKOTNA VILLAGE	774
TANACROSS VILLAGE (IRA)	775
TANANA VILLAGE	777
TAOS DAY SCHOOL	1016
TATITLEK VILLAGE (IRA)	780
TAZLINA VILLAGE	781
TE TSU GEH OWEENGE DAY SCHOOL (TESUQUE)	1017
TEECNOSPOS CHAPTER	782
TEESTO CHAPTER	783
TELIDA VILLAGE	784
TELLER VILLAGE	785
TESUQUE PUEBLO	787
TETLIN VILLAGE (IRA)	788
THEODORE JAMERSON ELEMENTARY SCHOOL	790
THEODORE ROOSEVELT SCHOOL	791
THLOPTHLOCCO TRIBAL TOWN	792
THOREAU CHAPTER	793
T'IIS NAZBAS COMMUNITY SCHOOL (TEECNOSPOS)	1018
T'IISTS'OOZJ'BI'OLTA (CROWNPOINT)	1019
TIMBISHA SHOSHONE BAND	795
TIOSPAYE TOPA SCHOOL	1020
TOGIAK VILLAGE	797
TOHAAII' COMMUNITY SCHOOL (TOADLENA)	1021
TO'HAJFILEE-HE (CANONCITO)	1022
TOHATCHI CHAPTER	798
TOHONO O'ODHAM HIGH SCHOOL	1023
TOHONO O'ODHAM HOUSING AUTHORITY	799
TOKSOOK BAY VILLAGE	802
TOLANI LAKE CHAPTER	803
TONALEA CHAPTER	804
TONALEA DAY SCHOOL (RED LAKE)	1024
TONAWANDA BAND OF SENECAS	805
TONTO APACHE TRIBAL COUNCIL	807
TORREON/STAR LAKE CHAPTER	808
TRENTON SCHOOL	810
TRINIDAD RANCHERIA	811
TSAILE/WHEATFIELDS CHAPTER	812
TSAYATOH CHAPTER	813
TSE'II'AHI' COMMUNITY SCHOOL (STANDING ROCK)	1025
TSELANI/COTTONWOOD CHAPTER	814
TUBA CITY CHAPTER	815
TUBA HIGH SCHOOL BOARD, INC.	1026
TUCKER ELEMENTARY SCHOOL	816
TULUKSAK VILLAGE (IRA)	819
TUNTUTULIAK VILLAGE	821
TUNUNAK VILLAGE (IRA)	822
TUOLUMNE RANCHERIA	823
TURNING POINT	1073
TURTLE MOUNTAIN COMMUNITY COLLEGE	1027
TURTLE MOUNTAIN ELEMENTARY SCHOOL	1028
TURTLE MOUNTAIN HIGH SCHOOL	826
TURTLE MOUNTAIN MIDDLE SCHOOL	1029

ATTACHMENT A.—RAMAH NAVAJO CHAPTER SETTLEMENT ADMINISTRATION—Continued

[Settlement Administrator does not have any information on file for the base year amount for 1993; Appendix F paragraph 10(b)—Provisional list (part 2 of 2); Alphabetical order—by organization]

Tribe/Organization	Control No.
TUSCARORA NATION	827
TUSCARORA NATION	828
TWENTY-NINE PALMS BAND OF MISSION INDIANS	829
TWIN BUTTES DAY SCHOOL	830
TWIN HILLS VILLAGE	831
TWIN LAKES CHAPTER	832
TWO EAGLE RIVER SCHOOL	833
TWO GREY HILLS CHAPTER	834
TYONEK VILLAGE (IRA)	835
UGASHIK VILLAGE	837
UINTAH AND OURAY TRIBAL BUSINESS COMMITTEE	838
UMKUMIUT NATIVE VILLAGE	839
UNALAKLEET VILLAGE (IRA)	840
UNGA TRIBAL COUNCIL	841
UNGA VILLAGE	842
UNITED AUBURN INDIAN COMMUNITY	843
UNITED CROW BAND INC	844
UNITED KEETOOWAH BAND IN OKLAHOMA	845
uNITED VILLAGES INC	848
UPPER FRUITLAND CHAPTER	849
UPPER LAKE BAND OF POMO INDIANS	850
UPPER LAKE RANCHERIA	851
VENETIE TRIBAL GOVERNMENT	857
VENETIE VILLAGE (IRA)	858
VIEJAS (BARON LONG)	859
VIEJAS BAND OF THE KUMEYAAY NATION	860
WA HE LUT INDIAN SCHOOL	1030
WAINWRIGHT VILLAGE	862
WALES VILLAGE (IRA)	863
WASHOE TRIBE—CARSON COLONY COMMUNITY COUNCIL	866
WASHOE TRIBE—DRESSLERVILLE COMMUNITY COUNCIL	867
WASHOE TRIBE—STEWART COMMUNITY COUNCIL	868
WASHOE TRIBE—WOODFORDS COLONY	869
WELLS INDIAN COLONY BAND COUNCIL	871
WESTERN APACHE CONSTRUCTION COMPANY	872
WHIPPOORWILL	873
WHITE CONE	874
WHITE MOUNTAIN VILLAGE (IRA)	877
WHITE ROCK CHAPTER	878
WHITE SHIELD SCHOOL	879
WHITEHORSE LAKE	880
WICHITA AND AFFILIATED TRIBES	882
WIDE RUINS CHAPTER	883
WIDE RUINS COMMUNITY SCHOOL	1031
WINGATE ELEMENTARY SCHOOL	1032
WINNEMUCCA COLONY INDIAN RESERVATION	885
WINSLOW DORMITORY	1034
WOODFORDS COMMUNITY COUNCIL	886
WOUNDED KNEE DISTRICT SCHOOL	1035
WOUNDED KNEE DISTRICT SCHOOL, OGLALA LAKOTA TREATY	887
WRANGELL COOPERATIVE ASSN (IRA)	888
YAKAMA TRIBAL SCHOOL	891
YAVAPAI-APACHE NATION	894
YUPIIT OF ANDEREAFSKI	899
YUROK TRIBE OF CALIFORNIA	900
ZIA DAY SCHOOL	1036

Attachment B.—United States District Court for the District of New Mexico

Ramah Navajo Chapter, et al., **v.** *Gale Norton, et al.*

[CIV No. 90–00957 LH/WWD]

Second Partial Settlement Agreement Claim Form

REDW, LLC, Ramah Navajo Chapter Class Action Settlement Administrator, 6401 Jefferson NE., Post Office Box 93659, Albuquerque, New Mexico 87199–3659, 1–888–726–9418

Introduction, Instructions, and Definitions

To share in this settlement this claim form must be returned to the above address and postmarked no later than sixty (60) days after publication of this notice in the **Federal Register.**

All claim forms must be signed and notarized by a responsible official of the organization under penalty of perjury.

The Second Partial Settlement Agreement (PSA–2) may be obtained from the class settlement Web site at *http://www.rncsettlement.com* or by calling the Settlement Administrator at 1–888–726–9418.

All Class Members who wish to share in the Second Partial Settlement Agreement in this case must complete the claimant information in Section I. Only school grantees must complete Section II.

Special Instructions

1. If you do not agree with the base amount shown on the attached Provisional List for your organization for FY/CY 1993, please submit a letter stating why you do not agree with the amount shown and provide the amount that you believe is correct, with supporting documentation. The Settlement Administrator has discretion to accept or reject such documentation or to seek further clarification or documentation.

2. If you did *not* receive a share of the First Partial Settlement in this case for the year 1993 please submit your 1993 documentary evidence, along with the completed claim form.

3. If you did not have any BIA funding expenditures for the year 1993 but did have BIA funding expenditures for 1992 or 1994, or both, please complete the claim form for the years that you meet the requirements as set forth below and attach your entity's supporting documentation.

Information provided to the settlement Administrator will be reviewed for adequacy and accuracy. Class Members shall be required to timely provide to the Independent CPA and data and documentation as may be required to demonstrate their eligibility.

Definitions

(1) Documentary evidence to support a claim includes the Schedule of Federal Financial Assistance portion of audited financial statements, contract award documents, and IDC rate agreements which show actual expenditures on BIA programs under Public Law 93–638 contract for each year your entity had BIA Public Law 93–638 contracts or compacts during the settlement period (1992–1994). The Schedule of Federal Financial Assistance will control over all other data and must be provided if it exists.

(2) For purposes of PSA–2, the definition of construction contained in 25 U.S.C. § 450b(a) (''Construction Programs'') will be used: ''Construction'' means—programs for the planning, design, construction, repair, improvement, and expansion of buildings or facilities, including but not limited to, housing, law enforcement and detection facilities, sanitation and water systems, roads, schools, administration and health facilities, irrigation and agricultural work, and water conservation, flood control and port facilities.

Construction Expenditures above $100,000 will not be included in the ''BIA Expenditures'' amount used to calculate class members' share under PSA–2.

[Please note that an exclusion of certain construction activities was later added at 25 U.S.C. § 450b(m) from this definition. That change did not become law until after the close of FY 1994, hence those later exclusions for ''construction purposes'' will not be recognized in calculating shares under this settlement. This means that HIP expenditures and construction planning costs for construction *must* be included as part of construction expenditures on this form.]

Forms

Attached is the Claim form which must be submitted by a duly authorized official of the tribe or tribal organization under penalty of perjury.

All Class Members must complete Section 1 of this form in order to receive a share of this settlement. Section II applies only to school grantees.

Special Requirements for Direct Contract Support Survey Tribes and Tribal Organizations

If your tribe or entity participated in the survey of direct contract support costs in the year 2000, you can receive reimbursement of your out-of-pocket expenditures connected with the survey by submitting a separate statement with receipts or other documents of your incurred costs. A list of tribes who participated in the survey is attached to this form.

Questions may be directed to the Independent CPA at REDW, LLC, Ramah Navajo Chapter Class Action Settlement Administrator, 6401 Jefferson NE., Post Office Box 93659, Albuquerque, New Mexico 87199–3659, 1–888–726–9418, fax (505) 998–3333, E-mail: *rncsettlement@redw.com.*

Class Members Who Participated in the DCSC Survey

Bristol Bay Native Association
Burns Paiute Tribes
Central Council of Tlingit & Haida Indian Tribes of Alaska
Confederated Tribes of the Colville Reservation
Grand Traverse Band of Ottawa and Chippewa Indians
Great Lakes Indian Fish & Wildlife Commission
Hoopa Valley Tribal Council
Jamestown S'Klallam Tribe
Klamath Tribes
Lac Courte Oreilles
Lac de Flambeau Band of Lake Superior Chippewa Indians
Lummi Indian Business Council
Mescalero Apache Tribe
Miccosukee Corporation
Mississippi Band of Choctaw Indians
Nambe Pueblo
Nez Perce Tribe
North Slope Borough School District
Northwest Indian Fisheries Commission
Penobscot Indian Nation
Pueblo of Zuni
Quinault Indian Nation
Ramah Navajo Chapter
Red Lake Band of Chippewa Indians
Sac & Fox Nation
Sinte Gleska University
Southern Ute Indian Tribe
Tanana Chiefs Conference, Inc.
Tohono O'Odham Nation

BILLING CODE 4310–4J–P

CLAIM FORM – SECOND PARTIAL SETTLEMENT

PURSUANT TO APPENDIX F OF SECOND PARTIAL SETTLEMENT

United States District Court
For the District of New Mexico

Ramah Navajo Chapter, et al v. Gale Norton, et al.
CIV No. 90-00957 LH/WWD

SECTION I

PAGE 1 of 3

ALL CLAIMANTS MUST FILL OUT AND SUBMIT THIS SECTION I.
SCHOOL GRANTEES MUST ALSO FILL OUT AND SUBMIT SECTION II.

(Please type or print)

_____
Name of federally recognized tribe or tribal organization

_____
Contact person

_____
Mailing Address

_____ _____ _____
City State Zip Code

_____ _____
Area Code Telephone Number

_____ _____
Area Code Fax Number

_____
E-mail Address

_____
Taxpayer Identification Number

_____Federally Recognized Tribe _____Tribal Organization

Attachment B, Page 6

Claim Form
PAGE 2 of 3
SECTION I (CONTINUED)

REQUIRED SWORN CERTIFICATIONS

I hereby certify that

_____(
name of federally recognized tribe or tribal organization)
expended funds under one or more BIA P.L. 93-638 contract(s) or compact(s) for each of the following years marked below. Each year must be marked, enter yes or no.

		No	Yes
FY (or CY)	1992	____	____
FY (or CY)	1993	____	____
FY (or CY)	1994	____	____

If you answer yes to 1993 above, then you only need to provide the requested financial information below for 1993. Otherwise, you must provide the info for the other two years.

		Amount BIA '638 Non-construction Expenditures (Direct & Indirect)	Amount BIA Construction Expenditures* (Direct & Administrative)	Check Here If Your Entity Was A Tribally Controlled School Grantee Under 25 §2001 *et. seq.* U.S.C.
FY (or CY)	1992	$ _____	$ _____	_____
FY (or CY)	1993	_____	_____	_____
FY (or CY)	1994	_____	_____	_____

* As defined on page 2 of this form. If the construction expenditure for the given year is $100,000 or less, it will not be excluded from your BIA expenditures amount.

REQUIRED SUPPORTING DOCUMENTATION

If the BIA funding expenditures amount shown on the attached "Provisional List" for your organization for 1993 is not accurate, or if you entered a different amount for 1993 in the certification portion of this form, you must submit supporting documentation to verify the amount you claim to be correct as shown in the certification portion of this form. If you did not have BIA expenditures for 1993 you do need to document your 1992 and 1994 BIA expenditures, if any.

Separate documentation of construction expenditures will not be required unless REDW,

LLC later determines that such documentation is required in a particular case.

CERTIFICATION BY RESPONSIBLE OFFICIAL

These representations are true and correct to the best of the undersigned signatory's knowledge, information and belief.

_____
Signature of Responsible Official

_____
Print Name

PAGE 3 of 3
SECTION I (CONTINUED)

State of_____)
) ss.
County of _____)

The foregoing was duly sworn to and subscribed on penalty of perjury before me this day by _____, known to me to be that person whose name appears above, this _____ day of _____, 2003.

_____
NOTARY PUBLIC

My Commission Expires:_____ (seal)

SECTION II

PAGE 1 of 2

United States District Court
For the District of New Mexico

Ramah Navajo Chapter, et al v. Gale Norton, et al.
CIV No. 90-00957 LH/WWD

FOR SCHOOL GRANTEES ONLY

PLEASE NOTE: IF YOU ARE A CLASS MEMBER AS WELL AS A SCHOOL GRANTEE YOU MUST ALSO COMPLETE THIS SECTION.

School grant expenditures will be included as BIA expenditures only if they were included in the BIA direct program base in the calculation of a negotiated indirect cost rate per 25 U.S.C. §2008(h) (formerly §2008(d)(4)). Accordingly, School Grantees are required to attach their indirect cost agreements and all other data and documentation as may be required by the Independent CPA to demonstrate the amount of school expenditures which were included in the direct base under BIA expenditures.

I hereby certify that

_____
(name of federally recognized tribal organization)
expended funds under one or more P.L. 93-638 contract(s) or compact(s) and under a Tribally Controlled School Grant Act grant for each of the years marked below and that the amounts listed below were included in the BIA direct cost base.

	No	Yes	Indirect Cost Rate	Amount of BIA Expenditures In Direct Cost Base (including School Grant Expenditures)	Amount of BIA School Grant Expenditures in Direct Cost Base
1992	____	____	_____	$_____	$_____
1993	____	____	_____	_____	_____
1994	____	____	_____	_____	_____

Attachment B, Page 9

PAGE 2 of 2
SECTION II (CONTINUED)

These representations are true and correct to the best of the undersigned signatory's knowledge, information and belief.

_____
Signature of Responsible Official

_____
Print Name

State of_____)
) ss.
County of _____)

The foregoing was duly sworn to and subscribed under penalty of perjury before me this day by _____, known to me to be that person whose name appears above, this _____ day of _____, 2003.

_____
NOTARY PUBLIC

My Commission Expires:_____ (seal)

[FR Doc. 03–12165 Filed 5–14–03; 8:45 am]
BILLING CODE 4310–4J–C

DEPARTMENT OF THE INTERIOR

Bureau of Land Management

[MT–921–03–1320–EL–P; MTM 92532]

Notice of Invitation—Coal Exploration License Application MTM 92532

AGENCY: Bureau of Land Management, Interior.

ACTION: Notice of invitation.

SUMMARY: Members of the public are hereby invited to participate with Decker Coal Company in a program for the exploration of coal deposits owned by the United States of America in the following-described lands located in Big Horn County, Montana, encompassing 320.00 acres:

T. 9 S., R. 40 E., P. M. M.

Sec. 5: SE¼
Sec. 8: NE¼

SUPPLEMENTARY INFORMATION: Any party electing to participate in this exploration program shall notify, in writing, both the State Director, Bureau of Land Management, P.O. Box 36800, Billings, Montana 59107–6800; and Decker Coal Company, P.O. Box 12, Decker, Montana 59025. Such written notice must refer to serial number MTM 92532 and be received no later than June 16, 2003 or 10 calendar days after the last publication of this Notice in the *Big Horn County* News newspaper, whichever is later. This Notice will be published once a week for two (2) consecutive weeks in the *Big Horn County News,* Hardin, Montana.

The proposed exploration program is fully described, and will be conducted pursuant to an exploration plan to be approved by the Bureau of Land Management. The exploration plan, as submitted by Decker Coal Company, is available for public inspection at the Bureau of Land Management, Montana State Office, 5001 Southgate Drive, Billings, Montana, during regular business hours (9 a.m. to 4 p.m.), Monday through Friday.

FOR FURTHER INFORMATION CONTACT: Robert Giovanini, Mining Engineer, or Connie Schaff, Land Law Examiner, Branch of Solid Minerals (MT–921), Bureau of Land Management, Montana State Office, P.O. Box 36800, Billings, Montana 59107–6800, telephone (406) 896–5084 or (406) 896–5060, respectively.

Dated: April 8, 2003.

Randy D. Heuscher,

Chief, Branch of Solid Minerals.

[FR Doc. 03–12061 Filed 5–14–03; 8:45 am]
BILLING CODE 4310–$$–P

DEPARTMENT OF THE INTERIOR

Bureau of Land Management

[MT–921–03–1320–EL–P; MTM 92544]

Notice of Invitation—Coal Exploration License Application MTM 92544

AGENCY: Bureau of Land Management, Interior.

ACTION: Notice of invitation.

SUMMARY: Members of the public are hereby invited to participate with Kiewit Mining Group, Inc., in a program for the exploration of coal deposits owned by the United States of America in the following-described lands located in Prairie County, Montana, encompassing 240.00 acres:

T. 11 N., R. 49 E., P. M. M.
Sec. 21: NE¼SE¼, NW¼NE¼
Sec. 22: NE¼SE¼
Sec. 27: NW¼NW¼, SE¼NW¼
Sec. 28: SW¼NE¼

SUPPLEMENTARY INFORMATION: Any party electing to participate in this exploration program shall notify, in writing, both the State Director, Bureau of Land Management, PO Box 36800, Billings, Montana 59107–6800, and Kiewit Mining Group, Inc., PO Box 3, Decker, Montana 59025. Such written notice must refer to serial number MTM 92544 and be received no later than June 16, 2003 or 10 calendar days after the last publication of this Notice in *The Terry Tribune,* Terry, Montana, or *The Miles City Star,* Miles City, Montana, newspapers, whichever is later. This Notice will be published once a week for two (2) consecutive weeks in *The Terry Tribune,* Terry, Montana and *The Miles City Star,* Miles City, Montana.

The proposed exploration program is fully described, and will be conducted pursuant to an exploration plan to be approved by the Bureau of Land Management. The exploration plan, as submitted by Kiewit Mining Group, Inc., is available for public inspection at the Bureau of Land Management, Montana State Office, 5001 Southgate Drive, Billings, Montana, during regular business hours (9 a.m. to 4 p.m.), Monday through Friday.

FOR FURTHER INFORMATION CONTACT: Robert Giovanini, Mining Engineer, or Connie Schaff, Land Law Examiner, Branch of Solid Minerals (MT–921), Bureau of Land Management, Montana State Office, PO Box 36800, Billings, Montana 59107–6800, telephone (406) 896–5084 or (406) 896–5060, respectively.

Dated: April 15, 2003.

Randy D. Heuscher,

Chief, Branch of Solid Minerals.

[FR Doc. 03–12062 Filed 5–14–03; 8:45 am]

BILLING CODE 4310–$$–P

DEPARTMENT OF JUSTICE

Notice of Lodging Proposed Consent Decree

In accordance with Departmental Policy, 28 CFR 50.7, notice is hereby given that a proposed consent decree in the case of *United States of America, Plaintiff* v. *Charles E. Corbett, Jr., Defendant*, Civil Action No. 4:03–0166–25 (D.S.C.), was lodged with the United States District Court for the District of South Carolina, Florence Division, on May 2, 2003. This proposed Consent Decree concerns a complaint filed by the United States of America against Charles E. Corbett, Jr., pursuant to sections 301(a) and 309(b) and (d) of the Clean Water Act, 33 U.S.C. 1311(a) and 1319(b) and (d), to obtain injunctive relief from, and impose civil penalties against, the Defendant for unauthorized discharge of dredged or fill material into waters of the United States in connection with the development of a portion of a 4.724 acre site adjacent to Gravelly Gully Circle on Highway 544 near the City of Conway, Horry County, South Carolina.

The proposed Consent Decree prohibits any further discharge of pollutants into waters of the United States and requires the payment of civil penalties in the amount of $5,000.

The Department of Justice will accept written comments relating to this proposed Consent Decree for thirty (30) days from the date of publication of this notice. Please address comments to Joseph P. Griffith, Jr., Assistant United States Attorney, P.O. Box 978, Charleston, South Carolina, 29402 and refer to *United States of America* v *Charles E. Corbett, Jr.*

The proposed Consent Decree may be examined at the Clerk's office, United States District Court for the District of South Carolina, Florence Division, 401 W. Evans Street, Florence, South Carolina 29501. In addition, the proposed Consent Decree may be viewed on the World Wide Web at *http://www.usdoj.gov/enrd/home.html.*

Joseph P. Griffith Jr.,

Assistant United States Attorney, 151 Meeting Street, Ste. 200, P.O. Box 978, Charleston, S.C. 29402, (843) 266–1667 (tel), (843) 727–4443 (fax), joseph.griffith@usdoj.gov.

[FR Doc. 03–12052 Filed 5–14–03; 8:45 am]

BILLING CODE 4419–15–M

DEPARTMENT OF JUSTICE

Notice of Lodging of Settlement Stipulation Under the Comprehensive Environmental Response, Compensation and Liability Act

Notice is hereby given that on April 30, 2003, a proposed Stipulation and Agreement in *United States of America et al.* v. *The Ed Krewatch Partnership, et al.,* C.A. No. 01–660 (D. Del.), was lodged with the United States District Court for the District of Delaware.

In this action the United States has sought to recover costs incurred by the United States Environmental Protection Agency (''EPA'') in 1996–1997, under Section 104(a) of the Comprehensive Environmental Response, Compensation and Liability Act, as amended (''CERCLA''), 42 U.S.C. 9604(a), at the Drum Burial Area of the Krewatch Farm Site. The United States settled its claims against The Ed Krewatch Partnership and Anthony Nero in 2001 and simultaneously sued Gardner Asphalt Corporation (''GAC''), Raymond T. Hyer, Jr. (''Hyer''), and Emulsion Products Company (''Emulsion''). The Stipulation and Agreement will resolve the liability of GAC, Hyer and Emulsion for their liability under Section 107 of CERCLA, 42 U.S.C. 9607.

The Krewatch Farm Site is located near Seaford, Delaware. EPA conducted a removal action at the Drum Burial Area of the Site to remove buried drums and soil which had become contaminated with hazardous substances. In settlement, Hyer and Emulsion have agreed to pay the sum of $300,000 over a five year period. Upon the District Court's approval of the Stipulation and Agreement, Hyer and Emulsion will receive a covenant not to sue from the United States. GAC will receive its covenant not to sue when the principal amount of the settlement and all accumulated interest have been paid. All defendants will receive contribution protection when the Stipulation and Agreement are approved by the Court. In the event Hyer and Emulsion fail to pay an installment, the United States has the right to seek entry of a judgment against them in the District Court, as soon as 10 days after the payment is due. The only defense to entry of judgment would be that payment has been made.

Upon the District Court's approval of the Stipulation and Agreement, the United States will move to dismiss a declaratory judgment action filed in the United States Bankruptcy Court for the Southern District of Florida, in which the United States has been seeking declaratory rulings that the discharge of

debts GAC and Hyer received under a plan of reorganization confirmed in 1993 does not bar the United States from pursuing its CERCLA claims against them.

The Department of Justice will receive for a period of thirty (30) days from the date of this publication comments relating to the proposed Stipulation and Agreement. Comments should be addressed to the Assistant Attorney General for the Environment and Natural Resources Division, P.O. Box 7611, U.S. Department of Justice, Washington, DC 20044–7611, and should refer to *United States of America et al.* v. *The Ed Krewatch Partnership, et al.,* DJ No. 90–11–3–07224.

The proposed Stipulation and Agreement may be examined at the office of the United States Attorney, District of Delaware, 1201 N. Market Street, Wilmington, DE and at the Region III Office of the Environmental Protection Agency, 1650 Arch St., Philadelphia, PA 19103. During the public comment period, the Stipulation and Agreement may also be examined on the following Department of Justice Web site, *http://www.usdoj.gov/enrd/open.html.* A copy of the Stipulation and Agreement may be obtained by mail from the Consent Decree Library, P.O. Box 7611, U.S. Department of Justice, Washington, DC 20044–7611 or by faxing or e-mailing a request to Tonia Fleetwood (*tonia.fleetwood@usdoj.gov*), fax no. (202) 514–0097, phone confirmation number (202) 514–1547. In requesting a copy from the Consent Decree Library, please enclose a check in the amount of $7.25 (25 cents per page reproduction cost) payable to the U.S. Treasury. In all correspondence, please refer to the case by its title and DOJ Ref. # 90–11–3–07224.

Robert D. Brook,

Assistant Chief, Environmental Enforcement Section, Environment and Natural Resources Division.

[FR Doc. 03–12054 Filed 5–14–03; 8:45 am]

BILLING CODE 4410–15–M

DEPARTMENT OF JUSTICE

Notice of Lodging of Consent Decree Between the United States and Wisconsin Electric Power Company Under the Clean Air Act

Under 28 C.F.R. 50.7, notice is hereby given that on April 29, 2003, a proposed consent decree (''Consent Decree'') between Wisconsin Electric Power Company (''Wisconsin Electric'') and the United States, Civil Action No. 2003V00451, was lodged with the United States District Court for the Eastern District of Wisconsin.

The Consent Decree would resolve claims asserted by the United States against Wisconsin Electric pursuant to Sections 113(b) and 167 of the Clean Air Act (the ''Act''), 42 U.S.C. 7413(b) and 7477, seeking injunctive relief and the assessment of civil penalties for WE's violations of:

(a) The Prevention of Significant Deterioration provisions in Part C of Subchapter I of the Act, 42 U.S.C. 7470–92;

(b) The nonattainment New Source Review provisions in Part D of Subchapter I of the Act, 42 U.S.C. 7501–7515;

(c) The federally-enforceable State Implementation Plan developed by the State of Michigan (the ''Michigan SIP''); and

(d) The federally-enforceable State Implementation Plan developed by the State of Wisconsin (the ''Wisconsin SIP'').

The complaint filed by the United States alleges, among other things, that between approximately 1982 and the present, Wisconsin Electric modified and thereafter operated certain coal-fired electricity generating units at its Oak Creek Generating Station in Milwaukee County, Wisconsin, without first obtaining a PSD permit authorizing the construction and without installing the best available technology to control emissions of sulfur dioxide, nitrogen oxides, and particulate matter, as required by the Act, applicable federal regulations, and the Michigan and Wisconsin SIPs. These major modifications included, but were not limited to, replacement of economizers, induced draft fans, waterwall tubes, reheaters and superheaters on one or more units at the Oak Creek Generating Station. These modifications resulted in significant net emissions increases, as defined by 40 CFR 52.2(b)(3)(i), of one or more of the following pollutants: NO_X, SO_2, and PM.

The complaint also alleges, upon information and belief, that Wisconsin Electric undertook similar major modifications at one or more of its other facilities—namely, the Presque Isle Generating Station in Marquette County, Michigan, the Pleasant Prairie Generating Station in Kenosha County, Wisconsin, the Port Washington Generating Station in Ozaukee County, Wisconsin, and the Valley Generating Station in Milwaukee County, Wisconsin—which resulted in significant net emissions increases, as defined by 40 CFR 52.21(b)(3)(i), of one or more of the following pollutants: NO_X, SO_2, and PM.

The proposed Consent Decree would require Wisconsin Electric to reduce SO_2, NO_X, and PM emissions across its coal-fired system through the installation of state-of-the-art pollution control technologies and the retirement of certain units. In addition, the proposed Consent Decree would require Wisconsin Electric to spend no less than $20 million to implement the TOXECON Project at its Presque Isle Power Plant, which is designed to implement and explore innovative ways to reduce mercury and PM emissions from coal-fired power plants, as a means of mitigating the harm caused by the alleged violations. Finally, the proposed Consent Decree would require Wisconsin Electric to pay a $3.2 million civil penalty.

The Department of Justice will receive for a period of thirty (30) days from the date of this publication comments relating to the Consent Decree. Comments should be addressed to the Assistant Attorney General, Environmental and Natural Resources Division, PO Box 7611, U.S. Department of Justice, Washington, DC 20044–7611, and should refer to *United States* v. *Wisconsin Electric,* D.J. Ref. No. 90–5–2–1–07493.

The Consent Decree may be examined at the Office of the United States Attorney, Eastern District of Wisconsin, Federal Courthouse, 517 East Wisconsin Ave., Milwaukee, Wisconsin 53202, and at U.S. EPA Region V, 77 West Jackson Blvd., Chicago, IL 60604–3507. During the public comment period, the Consent Decree may also be examined on the following Department of Justice Web site, *http://www.usdoj.gov/enrd/open.html.* A copy of the Consent Decree may also be obtained by mail from the Consent Decree Library, PO Box 7611, U.S. Department of Justice, Washington, DC 20044–7611 or by faxing or e-mailing a request to Tonia Fleetwood (*tonia.fleetwood@usdoj.gov*), fax no. (202) 514–0097, phone confirmation number (202) 514–1547. In requesting a copy from the Consent Decree Library, please enclose a check in the amount of $18.00 (25 cents per page reproduction cost) payable to the U.S. Treasury.

W. Benjamin Fisherow,

Deputy Chief, Environmental Enforcement Section, Environment and Natural Resources Division.

[FR Doc. 03–12053 Filed 5–14–03; 8:45 am]

BILLING CODE 4410–15–M

DEPARTMENT OF JUSTICE

Drug Enforcement Administration

Sankar N. Banerjee, M.D.; Revocation of Registration

On April 9, 2002, the Deputy Assistant Administrator, Office of Diversion Control, Drug Enforcement Administration (DEA), issued an Order to Show Cause to Sankar N. Banerjee, M.D. (Dr. Banerjee) of Exeter, New Hampshire, notifying him of an opportunity to show cause as to why DEA should not revoke his DEA Certificate of Registration, AB2002436 under 21 U.S.C. 824(a), and deny any pending applications for renewal or modification of that registration. As a basis for revocation, the Order to Show Cause alleged that Dr. Banerjee is not currently authorized to handle controlled substances in New Hampshire, the state in which he practices. The order also notified Dr. Banerjee that should no request for a hearing be filed within 30 days, his hearing right would be deemed waived.

The Order to Show Cause was sent by certified mail to Dr. Banerjee at his registered location in Exeter, New Hampshire. DEA received a signed receipt indicating that the Order to Show Cause was received by Dr. Banerjee on April 29, 2002. DEA has not received a request for hearing or any other reply from Dr. Banerjee or anyone purporting to represent him in this matter. Therefore, the Deputy Administrator, finding that (1) 30 days have passed since the receipt of the Order to Show Cause, and (2) no request for a hearing having been received, concludes that Dr. Banerjee is deemed to have waived his hearing right. After considering material from the investigative file in this matter, the Deputy Administrator now enters his final order without a hearing pursuant to 21 CFR 1301.43(d) and (e) and 1301.46.

The Deputy Administrator finds that Dr. Banerjee possessed DEA Certificate of Registration AB2002436. The Deputy Administrator further finds that an investigation by DEA revealed that on May 25, 2001, the New Hampshire Board of Medicine suspended Dr. Banerjee's license to pactice medicine in New Hampshire.

DEA does not have statutory authority under the Controlled Substances Act to issue or maintain a registration if the applicant or registrant is without state authority to handle controlled substances in the state in which he conducts business. *See* 21 U.S.C. 802(21), 823(f) and 824(a)(3). This prerequisite has been consistently upheld. *See Muttaiya Darmarajeh, M.D.,* 66 FR 52936 (2001); *Dominick A. Ricci, M.D.,* 58 FR 51104 (1993); *Bobby Watts, M.D.,* 53 FR 11919 (1988).

Here, it is clear that Dr. Banerjee is not licensed to handle controlled substances in the State of New Hampshire, where he is registered with DEA. Therefore, he is not entitled to a DEA registration in that state.

Accordingly, the Deputy Administrator of the Drug Enforcement Administration, pursuant to the authority vested in him by 21 U.S.C. 823 and 824 and 28 CFR 0.100(b) and 0.104, hereby orders that DEA Certificate of Registration AB2002436, issued to Sankar N. Banerjee, M.D. be, and it hereby is, revoked. The Deputy Administrator further orders that any pending applications for renewal or modification of such registration be, and they hereby are, denied. This order is effective June 16, 2003.

Dated: April 23, 2003.

John B. Brown III,

Deputy Administrator.

[FR Doc. 03–12157 Filed 5–14–03; 8:45 am]

BILLING CODE 4410–09–M

DEPARTMENT OF JUSTICE

Drug Enforcement Administration

Manufacturer of Controlled Substances Notice of Registration

By Notice dated January 6, 2003, and published in the **Federal Register** on January 28, 2003, (68 FR 4233), Bristol-Myers Squibb Pharma Company, 1000 Stewart Avenue, Garden City, New York 11530, made application by renewal to the Drug Enforcement Administration to be registered as a bulk manufacturer of the basic classes of controlled substances listed below:

Drug	Schedule
Oxycodone (9143)	II
Hydrocodone (9193)	II
Oxymorphone (9652)	II

The firm plans to manufacture the controlled substances to make finished products.

No comments or objections have been received. DEA has considered the factors in Title 21, United States Code, Section 823(a) and determined that the registration of Bristol-Myers Squibb Pharma Company to manufacture the listed controlled substances is consistent with the public interest at this time. DEA has investigated Bristol-Myers Squibb Pharma Company to ensure that the company's registration is consistent with the public interest. The investigation included inspection and testing of the company's physical security systems, verification of the company's compliance with state and local laws, and a review of the company's background and history. Therefore, pursuant to 21 U.S.C. § 823 and 28 CFR §§ 0.100 and 0.104, the Deputy Assistant Administrator, Office of Diversion Control, hereby orders that the application submitted by the above firm for registration as a bulk manufacturer of the basic classes of controlled substances listed above is granted.

Dated: April 16, 2003.

Laura M. Nagel,

Deputy Assistant Administrator, Office of Diversion Control, Drug Enforcement Administration.

[FR Doc. 03–12151 Filed 5–14–03; 8:45 am]

BILLING CODE 4410–09–M

DEPARTMENT OF JUSTICE

Drug Enforcement Administration

Importer of Controlled Substances Notice of Registration

By Notice dated January 7, 2003, and published in the **Federal Register** on January 29, 2003, (68 FR 4517), Cerilliant Corporation, 811 Paloma Drive, Suite A, Round Rock, Texas 78664, made application by renewal to the Drug Enforcement Administration to be registered as an importer of the basic classes of controlled substances listed below:

Drug	Schedule
Cathinone (1235)	I
Methcathinone (1237)	I
N-Ethylamphetamine (1475)	I
Gamma hydroxybutyric acid (2010)	I
Ibogaine (7260)	I

Drug	Schedule
Tetrahydrocannabinols (7370)	I
Mescaline (7381)	I
4-Bromo-2, 5-dimethoxyamphetamine (7391)	I
4-Bromo-2, 5-dimethoxyphenethylamine (7392)	I
4-Methyl-2, 5-dimethoxyamphetamine (7395)	I
2, 5-Dimethoxyamphetamine (7396)	I
3, 4-Methylenedioxyamphetamine (7400)	I
3, 4-Methylanedioxy-N-ethylamphetamine (7404)	I
3, 4-Methylenedioxymethamphetamine (7405)	I
4-Methoxyamphetamine (7411)	I
Psilocybin (7437)	I
Psilocyn (7438)	I
Etrophine (9056)	I
Heroin (9200)	I
Pholcodine (9314)	I
Cocaine (9041)	II
Codeine (9050)	II
Amphetamine (1100)	II
Methamphetamine (1105)	II
Amobarbital (2125)	II
Pentobarbital (2270)	II
Dihydrocodeine (9120)	II
Oxycodone (9143)	II
Hydromorphone (9150)	II
Benzoylecgonine (9180)	II
Ethylmorphine (9190)	II
Meperidine (9230)	II
Methadone (9250)	II
Dextropropoxyphene, bulk (non-dosage forms) (9273)	II
Morphine (9300)	II
Thebaine (9333)	II
Levo-alphacetylmethadol (9648)	II
Oxymorphone (9652)	II

The firm plans to import small quantities of the listed controlled substances for the manufacture of analytical reference standards.

No comments or objections have been received. DEA has considered the factors in Title 21, United States Code, Section 823(a) and determined that the registration of Cerilliant Corporation to import the listed controlled substances is consistent with the public interest and with United States obligations under international treaties, conventions, or protocols in effect on May 1, 1971, at this time. DEA has investigated Cerilliant Corporation on a regular basis to ensure that the company's continued registration is consistent with the public interest. The investigations include inspection and testing of the company's physical security systems, verification of the company's compliance with state and local laws, and a review of the company's background and history. Therefore, pursuant to Section 1008(a) of the Controlled Substances Import and Export Act and in accordance with Title 21, Code of Federal Regulations, Section 1301.34, the above firm is granted registration as an importer of the basic classes of controlled substances listed above.

Dated: April 16, 2003.

Laura M. Nagel,

Deputy Assistant Administrator, Office of Diversion Control, Drug Enforcement Administration.

[FR Doc. 03–12152 Filed 5–14–03; 8:45 am]

BILLING CODE 4410–09–M

DEPARTMENT OF JUSTICE

Drug Enforcement Administration

Importer of Controlled Substances; Notice of Registration

By Notice dated February 5, 2003, and published in the **Federal Register** on February 20, 2003, (68 FR 8307), Chattem Chemicals, Inc., 3801 St. Elmo Avenue, Building 18, Chattanooga, Tennessee, made application by renewal to the Drug Enforcement Administration (DEA) to be registered as an importer of phenylacetone (8501) a basic class of controlled substance listed in Schedule II.

The firm plans to import the phenylacetone to manufacture bulk controlled substances.

No comments or objections have been received. DEA has considered the factors in Title 21, United States Code, Section 823(a) and determined that the registration of Chattem Chemicals, Inc., to import phenylacetone is consistent with the public interest and with United States obligations under international treaties, conventions, or protocols in effect on May 1, 1971, at this time. DEA has investigated Chattem Chemicals, Inc., on a regular basis to ensure that the company's continued registration is consistent with the public interest. This investigation included inspection and testing of the company's physical security systems, verification of the company's compliance with state and local laws, and a review of the company's background and history. Therefore, pursuant to Section 1008(a) of the Controlled Substances Import and Export Act and in accordance with Title 21, Code of Federal Regulations, Section 1301.34, the above firm is granted registration as an importer of the basic class of controlled substance stated.

Dated: April 16, 2003.

Laura M. Nagel,

Deputy Assistant Administrator, Office of Diversion Control, Drug Enforcement Administration.

[FR Doc. 03–12153 Filed 5–14–03; 8:45 am]

BILLING CODE 4410–09–M

DEPARTMENT OF JUSTICE

Drug Enforcement Administration

Robert A. Kooker, M.D.; Revocation of Registration

On June 12, 2002, the Deputy Assistant Administrator, Office of Diversion Control, Drug Enforcement Administration (DEA), issued an Order to Show Cause to Robert A. Kooker, M.D. (Dr. Kooker) of Loomis, California, notifying him of an opportunity to show cause as to why DEA should not revoke his DEA Certificate of Registration, AK1490779 under 21 U.S.C. 824(a), and deny any pending applications for renewal or modification of that registration. As a basis for revocation, the Order to Show Cause alleged that Dr. Kooker is not currently authorized to handle controlled substances in California, the state in which he practices. The order also notified Dr. Kooker that should no request for a hearing be filed within 30 days, his hearing right would be deemed waived.

The Order to Show Cause was sent by certified mail to Dr. Kooker at his registered location in Loomis, California. DEA received a signed receipt indicating that the Order to Show Cause was received by Dr. Kooker on or around June 27, 2002. DEA has not received a request for hearing on any other reply from Dr. Kooker or anyone purporting to represent him in this matter. Therefore, the Deputy Administrator, finding that (1) 30 days have passed since the receipt of the Order to Show Cause, and (2) no request for a hearing having been received, concludes that Dr. Kooker is deemed to have waived his hearing right. After considering material from the investigative file in this matter, the Deputy Administrator now enters his final order without a hearing pursuant to 21 CFR 1301.43(d) and (e) and 1301.46.

The Deputy Administrator finds that Dr. Kooker possessed DEA Certificate of Registratin AK1490779. The Deputy Administrator further finds that an investigation by DEA revealed that on July 28, 2000, the California Physician's and Surgeon's Board suspended Dr. Kooker's license to practice medicine in California and ordered that Dr. Kooker could not reapply for licensing until July 28, 2003.

DEA does not have statutory authority under the Controlled Substances Act to issue or maintain a registration if the applicant or registrant is without state authority to handle controlled substances in the state in which he conducts business. *See* 21 U.S.C. 802(21), 823(f) and 824(a)(3). This prerequisite has been consistently upheld. *See Muttaiya Darmarajeh, M.D.,* 66 FR 52936 (2001); *Dominick A. Ricci, M.D.,* 58 FR 51104 (1993); *Bobby Watts, M.D.,* 53 FR 11919 (1988).

Here, it is clear that Dr. Kooker is not licensed to handle controlled substances in the State of California, where he is registered with DEA. Therefore, he is not entitled to a DEA registration in that state.

Accordingly, the Deputy Administrator of the Drug Enforcement Administration, pursuant to the authority vested in him by 21 U.S.C. 823 and 824 and 28 CFR 0.100(b) and 0.104, hereby orders that DEA Certificate of Registration AK1490779, issued to Robert A. Kooker, M.D. be, and it hereby is, revoked. The Deputy Administrator further orders that any pending applications for renewal or modification of such registration be, and they hereby are, denied. This order is effective June 16, 2003.

Dated: April 23, 2003.

John B. Brown, III,

Deputy Administrator.

[FR Doc. 03–12158 Filed 5–14–03; 8:45 am]

BILLING CODE 4410–09–M

NATIONAL ARCHIVES AND RECORDS ADMINISTRATION

Records Schedules; Availability and Request for Comments

AGENCY: National Archives and Records Administration (NARA).

ACTION: Notice of availability of proposed records schedules; request for comments.

SUMMARY: The National Archives and Records Administration (NARA) publishes notice at least once monthly of certain Federal agency requests for records disposition authority (records schedules). Once approved by NARA, records schedules provide mandatory instructions on what happens to records when no longer needed for current Government business. They authorize the preservation of records of continuing value in the National Archives of the United States and the destruction, after a specified period, of records lacking administrative, legal, research, or other value. Notice is published for records schedules in which agencies propose to destroy records not previously authorized for disposal or reduce the retention period of records already authorized for disposal. NARA invites public comments on such records schedules, as required by 44 U.S.C. 3303a(a).

DATES: Requests for copies must be received in writing on or before June 30, 2003. Once the appraisal of the records is completed, NARA will send a copy of the schedule. NARA staff usually prepare appraisal memorandums that contain additional information concerning the records covered by a proposed schedule. These, too, may be requested and will be provided once the appraisal is completed. Requesters will be given 30 days to submit comments.

ADDRESSES: To request a copy of any records schedule identified in this notice, write to the Life Cycle Management Division (NWML), National Archives and Records Administration (NARA), 8601 Adelphi Road, College Park, MD 20740–6001. Requests also may be transmitted by FAX to 301–837–3698 or by e-mail to *records.mgt@nara.gov.* Requesters must cite the control number, which appears in parentheses after the name of the agency which submitted the schedule, and must provide a mailing address. Those who desire appraisal reports should so indicate in their request.

FOR FURTHER INFORMATION CONTACT: Paul M. Wester, Jr., Director, Life Cycle Management Division (NWML), National Archives and Records Administration, 8601 Adelphi Road, College Park, MD 20740–6001. Telephone: 301–837–3120. E-mail: *records.mgt@nara.gov.*

SUPPLEMENTARY INFORMATION: Each year Federal agencies create billions of records on paper, film, magnetic tape, and other media. To control this accumulation, agency records managers prepare schedules proposing retention periods for records and submit these schedules for NARA's approval, using the Standard Form (SF) 115, Request for Records Disposition Authority. These schedules provide for the timely transfer into the National Archives of historically valuable records and authorize the disposal of all other records after the agency no longer needs them to conduct its business. Some schedules are comprehensive and cover all the records of an agency or one of its major subdivisions. Most schedules, however, cover records of only one office or program or a few series of records. Many of these update previously approved schedules, and some include records proposed as permanent.

No Federal records are authorized for destruction without the approval of the Archivist of the United States. This approval is granted only after a thorough consideration of their administrative use by the agency of origin, the rights of the Government and

of private persons directly affected by the Government's activities, and whether or not they have historical or other value.

Besides identifying the Federal agencies and any subdivisions requesting disposition authority, this public notice lists the organizational unit(s) accumulating the records or indicates agency-wide applicability in the case of schedules that cover records that may be accumulated throughout an agency. This notice provides the control number assigned to each schedule, the total number of schedule items, and the number of temporary items (the records proposed for destruction). It also includes a brief description of the temporary records. The records schedule itself contains a full description of the records at the file unit level as well as their disposition. If NARA staff has prepared an appraisal memorandum for the schedule, it too includes information about the records. Further information about the disposition process is available on request.

Schedules Pending

1. Department of the Air Force, Agency-wide (N1–AFU–03–6, 2 items, 2 temporary items). Records used to determine manpower requirements for service-type contracts, including electronic copies of records created using electronic mail and word processing.

2. Department of the Army, Agency-wide (N1–AU–03–7, 4 items, 4 temporary items). Records relating to the nomination, selection/non-selection, and appointment of individuals to honorary regimental positions. Electronic copies of records created using electronic mail and word processing are included.

3. Department of the Army, Agency-wide (N1–AU–03–8, 3 items, 3 temporary items). Records relating to enlisted selection boards. Included are such records as selection board reporting files, promotion packets, and electronic copies of documents created using electronic mail and word processing. This schedule authorizes the agency to apply the proposed disposition instructions to any recordkeeping medium.

4. Department of the Army, Agency-wide (N1–AU–03–11, 3 items, 3 temporary items). Individual flight records, including aeronautical rating orders, flying status orders, suspension from flying status orders, qualification records, and reports of physical examinations. Electronic copies of records created using electronic mail and word processing are also included. The most current Individual Flight Record and Flight Certificate (Department of the Army Form 759) will be placed in the service member's Official Military Personnel File on separation.

5. Department of Defense, Office of the Inspector General (N1–509–03–3, 8 items, 6 temporary items). Records relating to the voluntary disclosure program, including program management files and case files lacking significance. Also included are electronic copies of documents created using electronic mail and word processing. Proposed for permanent retention are recordkeeping copies of policy files and significant case files.

6. Department of Justice, Drug Enforcement Administration (N1–170–03–3, 5 items, 5 temporary items). System inputs, outputs, master files, and documentation of the Hazardous Waste Disposal System, which is used to track the disposal of hazardous waste associated with clandestine drug laboratories and the funding of cleanup operations. Also included are electronic copies of documents created using electronic mail and word processing.

7. Department of the Navy, Agency-wide (N1–NU–03–1, 4 items, 4 temporary items). Records relating to security clearance adjudications accumulated by the Criminal Investigative Service, including electronic copies of records created using electronic mail and word processing.

8. Department of the Treasury, Office of the Assistant Secretary for Management and Chief Financial Officer (N1–56–03–4, 25 items, 20 temporary items). Committee files, collection loan files, and electronic tracking systems relating to equal employment opportunity complaints and human resource needs, artifacts and gifts, and graphics and printing work. Also included are electronic copies of records created using electronic mail and word processing. Proposed for permanent retention are recordkeeping copies of historical structure reports, artifact collection files, and project files accumulated by the Office of the Curator. Also proposed for permanent retention are Treasury building renovation project files and related quarterly reports.

9. Department of the Treasury, Bureau of the Public Debt (N1–53–03–5, 4 items, 4 temporary items). Agency web site pages, which include such materials as copies of official organizational publications, bulletin board postings, press releases, laws and guidance, savings bond calculators, and frequently asked questions.

10. Department of the Treasury, Bureau of the Public Debt (N1–53–03–6, 5 items, 3 temporary items). Motion picture films, video masters, video copies, and dubs regarding savings bond programs. Included are such materials as news stories, company-produced videos, infomercials, public service announcements, and focus group videos. Original films of historical savings bond program advertisements and campaigns are proposed for permanent retention.

11. Department of the Treasury, Bureau of the Public Debt (N1–53–03–7, 5 items, 5 temporary items). Inputs, outputs, system documentation, and master files of the Bureau Automated Tracking System, which is designed to track correspondence from customers requesting information or tracking transactions involving Treasury securities.

12. Department of the Treasury, Bureau of the Public Debt, (N1–53–03–8, 7 items, 7 temporary items). Records relating to securities and coupon shipments, audit copies of advices from automated systems, payment due notices, customer contact records, and Treasury securities case files. Also included are electronic copies of documents created using electronic mail and word processing.

13. Department of the Treasury, Bureau of the Public Debt (N1–53–03–9, 150 items, 150 temporary items). Inputs, outputs, system documentation, and master files of the Savings Bond Replacement System, which is used to process cash and security transactions resulting from the sale and retirement of accrual and retirement type securities.

14. Environmental Protection Agency, Office of Environmental Information (N1–412–03–7, 4 items, 4 temporary items). Software programs, inputs, documentation, and master files associated with an electronic system used to catalog metadata pertaining to the definition, sources, and uses of environmental data, including information relating to chemical identification, biological taxonomy, and associated terminology.

15. National Archives and Records Administration, Office of Records Services—Washington, DC (N1–64–03–2, 3 items, 1 temporary item). Raw input electronic files resulting from the conversion of microfilm images of punch cards of Army serial numbers to ASCII data files. Proposed for permanent retention are merged raw files and merged processed files.

16. Small Business Administration, Office of Government Contracting and Business Development (N1–309–03–1, 7 items, 5 temporary items). System

inputs, outputs, and backups of the Technology Marketing Access Network, which contains demographic data and contract information on firms that have received awards under the Small Business Innovation Research and Small Business Technology Transfer Programs. Also included are electronic copies of documents created using electronic mail and word processing. Proposed for permanent retention are the master data files and the associated technical documentation.

17. Small Business Administration, Office of Government Contracting and Business Development (N1–309–03–3, 7 items, 5 temporary items). Inputs, outputs, and system backups of an electronic system used to approve businesses as eligible for assistance because they are located in ''historically underutilized business zones.'' Also included are electronic copies of documents created using electronic mail and word processing. Proposed for permanent retention are master files and the technical system documentation.

18. Small Business Administration, Office of Government Contracting and Business Development (N1–309–03–5, 11 items, 9 temporary items). Inputs, outputs, and system backups of an electronic system containing information on small businesses that is used for marketing their capabilities for contracts with the Federal Government and large businesses. Also included are electronic copies of documents created using electronic mail and word processing. Proposed for permanent retention are master data files and system documentation.

19. United States Office of Special Counsel, Agency-wide (N1–481–03–1, 23 items, 13 temporary items). Reading files, conflict of interest files, surveys, Alternative Dispute Resolution case files, program administrative files, litigation/investigative case files, and other records. Also included are electronic copies of records created using electronic mail and word processing. Proposed for permanent retention are recordkeeping copies of such records as final opinions, subject files, and calendars of the Special Counsel and Deputy Special Counsel, legal opinions, advisory opinions, record sets of directives, official publications, press releases, and significant litigation and investigative case files.

Dated: May 9, 2003.

Michael J. Kurtz,

Assistant Archivist for Record Services—Washington, DC.

[FR Doc. 03–12130 Filed 5–14–03; 8:45 am]

BILLING CODE 7515–01–P

NATIONAL COMMISSION ON TERRORIST ATTACKS UPON THE UNITED STATES

National Commission on Terrorist Attacks Upon the United States; Public Hearing

ACTION: Notice of public hearing.

SUMMARY: The National Commission on Terrorist Attacks Upon the United States will hold its second public hearings on May 22 and May 23, 2003, in Washington, DC. Congressional witnesses and people with expertise on aviation security will testify. Representatives of the media should register with the Commission in advance of the hearing. Seating for the general public will be on a first-come, first-served basis. Press availability will occur at the conclusion of each day's hearing.

DATES: May 22, 9 a.m. to 4 p.m., May 23, 9 a.m. to 1 p.m.

ADDRESSES: Hart Senate Office Building, 2nd and D Streets, NE., Washington, DC 20515.

FOR FURTHER INFORMATION CONTACT: Al Felzenberg (202) 301–4062 and (202) 236–4878 (Cellular).

SUPPLEMENTARY INFORMATION: Please refer to Public Law 107–306 (November 27, 2002), title VI (Legislation creating the Commission), and the Commission's Web site: *www.9-11Commission.gov.*

Dated: May 8, 2003.

Philip Zelikow,

Executive Director.

[FR Doc. 03–12108 Filed 5–14–03; 8:45 am]

BILLING CODE 8800–01–M

NATIONAL COUNCIL ON DISABILITY

Cultural Diversity Advisory Committee Meetings (Teleconferences)

AGENCY: National Council on Disability (NCD).

Times and Dates: 1:30 p.m. EDT, June 13, 2003, and August 15, 2003

Place: National Council on Disability, 1331 F Street, NW., Suite 850, Washington, DC.

Status: All parts of these meetings will be open to the public. Those interested in participating in these meetings should contact the appropriate staff member listed below. Due to limited resources, only a few telephone lines will be available for the conference calls.

Agenda: Roll call, announcements, reports, new business, adjournment.

Contact Person for More Information: Geraldine (Gerrie) Drake Hawkins, Ph.D., Program Specialist, NCD, 1331 F Street, NW., Suite 850, Washington, DC 20004; 202–272–2004 (voice), 202–272–2074 (TTY), 202–272–2022 (fax), *ghawkins@ncd.gov* (e-mail).

Cultural Diversity Advisory Committee Mission: The purpose of NCD's Cultural Diversity Advisory Committee is to provide advice and recommendations to NCD on issues affecting people with disabilities from culturally diverse backgrounds. Specifically, the committee will help identify issues, expand outreach, infuse participation, and elevate the voices of underserved and unserved segments of this nation's population that will help NCD develop federal policy that will address the needs and advance the civil and human rights of people from diverse cultures.

Dated: May 12, 2003.

Ethel D. Briggs,

Executive Director.

[FR Doc. 03–12167 Filed 5–14–03; 8:45 am]

BILLING CODE 6820–MA–P

NUCLEAR REGULATORY COMMISSION

[Docket No. 40–8989]

Envirocare of Utah, Inc.; Notice of Receipt of Amendment Request and Opportunity To Request a Hearing

I. Introduction

The U.S. Nuclear Regulatory Commission (NRC) has received, by letter dated March 27, 2003, a request from Envirocare of Utah, Inc., for approval of a license amendment to Materials License SMC–1559 to authorize it to receive and dispose of byproduct material, as defined in section 11e.(2) of the Atomic Energy Act (AEA) of 1954, as amended (hereafter referred to as 11e.(2) byproduct material), with concentrations of Ra–226 up to 100,000 pico curies per gram (pCi/g). Envirocare also requested approval of a revision to its License Application to allow disposal of containerized waste.

The Envirocare facility, located at Clive, Utah, is licensed by NRC to accept and dispose of 11e.(2) byproduct material received from others. Currently, Envirocare's license restricts the concentration of Ra–226 in 11e.(2) byproduct material received by Envirocare to 4000 pCi/g. Additionally, Envirocare's License Application discusses disposal of unpackaged 11e.(2) byproduct material. The unpackaged material is to be put into the disposal cell in layers not exceeding 12 inches.

The request from Envirocare, if granted by NRC, would allow 11e.(2) byproduct material with higher concentrations of Ra–226 to be disposed of at the facility. It would allow the higher activity material to be containerized and disposed of in containers that will not meet the existing 12 inch layering requirement.

The staff will review Envirocare's request for conformance with 10 CFR parts 20 and 40, using NUREG–1620, ''Standard Review Plan for the Review of a Reclamation Plan for Mill Tailings Sites Under Title II of the Uranium Mill Tailings Radiation Control Act'' and other applicable agency regulations and guidance. If NRC approves Envirocare's request, the approval will be documented in an amendment to Envirocare's license. However, before approving the request, NRC will need to make the findings required by the AEA and NRC regulations. These findings will be documented in a Technical Evaluation Report and either an Environmental Assessment or an Environmental Impact Statement.

II. Opportunity To Request a Hearing

The NRC hereby provides notice that this is a proceeding on an application for an amendment of a license falling within the scope of Subpart L, ''Informal Hearing Procedures for Adjudications in Materials and Operator Licensing Proceedings'' of NRC's rules and practice for domestic licensing proceedings in 10 CFR part 2. Pursuant to § 2.1205(a), any person whose interest may be affected by this proceeding may file a request for a hearing in accordance with § 2.1205(d). A request for a hearing must be filed within 30 days of the publication of this **Federal Register** notice.

The request for a hearing must be filed with the Office of the Secretary, either:

(1) By delivery to the Rulemaking and Adjudications Staff of the Office of the Secretary of the Commission at One White Flint North, 11555 Rockville Pike, Rockville, MD 20852, between 7:45 a.m. and 4:15 p.m., Federal workdays; or

(2) By mail or telegram addressed to the Secretary, U.S. Nuclear Regulatory Commission, Washington, DC 20555, Attention: Rulemaking and Adjudications Staff. Because of continuing disruptions in the delivery of mail to United States Government offices, it is requested that requests for hearing also be transmitted to the Secretary of the Commission either by means of facsimile transmission to 301–415–1101, or by e-mail to *hearingdocket@nrc.gov.*

In accordance with 10 CFR 2.1205(f), each request for a hearing must also be served, by delivering it personally or by mail, to:

(1) The applicant, Envirocare of Utah, Inc., 605 North 5600 West, Salt Lake City, Utah 84116; and

(2) The NRC staff, by delivery to the Office of the General Counsel, One White Flint North, 11555 Rockville Pike, Rockville, MD 20852, between 7:45 a.m. and 4:15 p.m., Federal workdays, or by mail addressed to the Office of the General Counsel, U.S. Nuclear Regulatory Commission, Washington, DC 20555. Because of continuing disruptions in the delivery of mail to United States Government offices, it is requested that requests for hearing also be transmitted to the Office of the General Counsel, either by means of facsimile transmission to 301–415–3725, or by e-mail to *OGCMailCenter@nrc.gov.*

In addition to meeting other applicable requirements of 10 CFR part 2 of the NRC's regulations, a request for a hearing filed by a person other than an applicant must describe in detail:

(1) The interest of the requestor;

(2) How that interest may be affected by the results of the proceeding, including the reasons why the requestor should be permitted a hearing, with particular reference to the factors set out in § 2.1205(h);

(3) The requestor's areas of concern about the licensing activity that is the subject matter of the proceeding; and

(4) The circumstances establishing that the request for a hearing is timely in accordance with § 2.1205(d).

III. Further Information

The application for the license amendment and the request to revise the License Application are available for inspection at NRC's Public Electronic Reading Room at *http://www.nrc.gov/reading-rm/adams.html.* [ADAMS Accession No. ML031000416] Documents may also be examined and/or copied for a fee, at the NRC's Public Document Room, located at One White Flint North, 11555 Rockville Pike, Rockville, MD 20854. Any questions with respect to this action should be referred to Myron Fliegel, Fuel Cycle Facilities Branch, Division of Fuel Cycle Safety and Safeguards, Office of Nuclear Materials Safety and Safeguards, U.S. Nuclear Regulatory Commission, Mail Stop T8–A33, Washington, DC 20555–0001. Telephone: (301) 415–6629.

Dated at Rockville, Maryland, this 9th day of May, 2003.

For the Nuclear Regulatory Commission.

Eric J. Leeds,

Deputy Director, Division of Fuel Cycle Safety and Safeguards, Office of Nuclear Materials Safety and Safeguards.

[FR Doc. 03–12114 Filed 5–14–03; 8:45 am]

BILLING CODE 7590–01–P

NUCLEAR REGULATORY COMMISSION

Public Meeting on Regulatory Oversight of the Potential High-Level Waste Repository at Yucca Mountain, NV

AGENCY: U.S. Nuclear Regulatory Commission.

ACTION: Notice of public meeting in Tecopa, California.

SUMMARY: The U.S. Nuclear Regulatory Commission (NRC) staff will hold a public meeting to discuss regulatory oversight of the potential high-level waste repository at Yucca Mountain. The meeting is intended to foster a common understanding among the stakeholders on safety and regulatory issues, should the U.S. Department of Energy (DOE) submit a license application to the NRC for a possible geologic repository at Yucca Mountain, Nevada. The meeting will be facilitated by Francis X. Cameron, Special Counsel for Public Liaison, Office of the General Counsel, NRC.

The meeting is primarily to acquaint the public with the NRC's oversight of a potential high-level waste repository at Yucca Mountain. It will include an overview of NRC's responsibilities and preparations for evaluating the safety of a potential repository, including the protection of groundwater; and conclude with an overview of the NRC's role with respect to the transportation and security of spent nuclear fuel. Several opportunities for questions will be provided. In addition, members of the NRC staff will be available for informal discussion with members of the public. The date, time, and location of the public meeting is shown below.

Date/Time: Wedneday, June 4, 2003, from 6:30 p.m.–8:30 p.m. (Pacific time).

Place: Tecopa Community Center, Hot Springs Road, Tecopa, California.

FOR FURTHER INFORMATION CONTACT: Francis X. Cameron, Special Counsel for Public Liaison, Office of the General Counsel, U.S. Nuclear Regulatory Commission, Washington DC 20555–0001, or by telephone: (301) 415–1642 or e-mail: *fxc@nrc.gov.*

Dated at Rockville, Maryland this 8th day of May, 2003.

For the Nuclear Regulatory Commission.

Janet R. Schlueter,

Chief, High-Level Waste Branch, Division of Waste Management, Office of Nuclear Material Safety and Safeguards.

[FR Doc. 03–12115 Filed 5–14–03; 8:45 am]

BILLING CODE 7590–01–P

PENSION BENEFIT GUARANTY CORPORATION

Required Interest Rate Assumption for Determining Variable-Rate Premium; Interest Assumptions for Multiemployer Plan Valuations Following Mass Withdrawal

AGENCY: Pension Benefit Guaranty Corporation.

ACTION: Notice of interest rates and assumptions.

SUMMARY: This notice informs the public of the interest rates and assumptions to be used under certain Pension Benefit Guaranty Corporation regulations. These rates and assumptions are published elsewhere (or can be derived from rates published elsewhere), but are collected and published in this notice for the convenience of the public. Interest rates are also published on the PBGC's Web site (*http://www.pbgc.gov*).

DATES: The required interest rate for determining the variable-rate premium under part 4006 applies to premium payment years beginning in May 2003. The interest assumptions for performing multiemployer plan valuations following mass withdrawal under part 4281 apply to valuation dates occurring in June 2003.

FOR FURTHER INFORMATION CONTACT: Harold J. Ashner, Assistant General Counsel, Office of the General Counsel, Pension Benefit Guaranty Corporation, 1200 K Street, NW., Washington, DC 20005, 202–326–4024. (TTY/TDD users may call the Federal relay service toll-free at 1–800–877–8339 and ask to be connected to 202–326–4024.)

SUPPLEMENTARY INFORMATION:

Variable-Rate Premiums

Section 4006(a)(3)(E)(iii)(II) of the Employee Retirement Income Security Act of 1974 (ERISA) and § 4006.4(b)(1) of the PBGC's regulation on Premium Rates (29 CFR part 4006) prescribe use of an assumed interest rate (the ''required interest rate'') in determining a single-employer plan's variable-rate premium. The required interest rate is the ''applicable percentage'' (currently 100 percent) of the annual yield on 30-year Treasury securities for the month preceding the beginning of the plan year for which premiums are being paid (the ''premium payment year''). (Although the Treasury Department has ceased issuing 30-year securities, the Internal Revenue Service announces a surrogate yield figure each month—based on the 30-year Treasury bond maturing in February 2031—which the PBGC uses to determine the required interest rate.)

The required interest rate to be used in determining variable-rate premiums for premium payment years beginning in May 2003 is 4.90 percent.

The following table lists the required interest rates to be used in determining variable-rate premiums for premium payment years beginning between June 2002 and May 2003.

For premium payment years beginning in:	The required interest rate is:
June 2002	5.65
July 2002	5.52
August 2002	5.39
September 2002	5.08
October 2002	4.76
November 2002	4.93
December 2002	4.96
January 2003	4.92
February 2003	4.94
March 2003	4.81
April 2003	4.80
May 2003	4.90

Multiemployer Plan Valuations Following Mass Withdrawal

The PBGC's regulation on Duties of Plan Sponsor Following Mass Withdrawal (29 CFR part 4281) prescribes the use of interest assumptions under the PBGC's regulation on Allocation of Assets in Single-Employer Plans (29 CFR part 4044). The interest assumptions applicable to valuation dates in June 2003 under part 4044 are contained in an amendment to part 4044 published elsewhere in today's **Federal Register**. Tables showing the assumptions applicable to prior periods are codified in appendix B to 29 CFR part 4044.

Issued in Washington, DC, on this 9th day of May 2003.

Joseph H. Grant,

Deputy Executive Director and Chief Operating Officer, Pension Benefit Guaranty Corporation.

[FR Doc. 03–12117 Filed 5–14–03; 8:45 am]

BILLING CODE 7708–01–P

SECURITIES AND EXCHANGE COMMISSION

Sunshine Act Meeting

FEDERAL REGISTER CITATION OF PREVIOUS ANNOUNCEMENT: (68 FR 23332, May 1, 2003).

Status: Closed meetings.

Place: 450 Fifth Street, NW., Washington, DC.

Date and Time of Previously Announced Meeting: Thursday, May 8, 2003.

Change in the Meeting: Additional item/additional meeting.

The following item was added to the closed meeting of Thursday, May 8, 2003: litigation matter.

An additional closed meeting was held on Friday, May 9, 2003, at 3 p.m.

The subject matter of the closed meeting scheduled for Friday, May 9, 2003, was: litigation matter.

Commissioner Goldschmid, as duty officer, determined that Commission business required the above change and that no earlier notice thereof was possible.

At times, changes in Commission priorities require alterations in the scheduling of meeting items. For further information and to ascertain what, if any, matters have been added, deleted or postponed, please contact the Office of the Secretary at (202) 942–7070.

Dated: May 12, 2003.

Margaret H. McFarland,

Deputy Secretary.

[FR Doc. 03–12221 Filed 5–12–03; 4:29 pm]

BILLING CODE 8010–01–M

SECURITIES AND EXCHANGE COMMISSION

[Release No. 34–47816; File No. SR–BSE–2003–03]

Self-Regulatory Organizations; Notice of Filing and Immediate Effectiveness of Proposed Rule Change by the Boston Stock Exchange, Incorporated, Relating to Its Floor Operations Fee Schedule

May 8, 2003.

Pursuant to section 19(b)(1) of the Securities Exchange Act of 1934 (''Act''),[1] and Rule 19b–4 thereunder,[2] notice is hereby given that on March 24, 2003, the Boston Stock Exchange, Incorporated (''Exchange''), filed with the Securities and Exchange Commission (''Commission'') the proposed rule change as described in Items I, II and III below, which Items have been prepared by the Exchange. On April 22, 2003, the Exchange filed Amendment No. 1 to the proposed rule change.[3] The Exchange has designated

[1] 15 U.S.C. 78s(b)(1).

[2] 17 CFR 240.19b–4.

[3] In Amendment No. 1, the Exchange amended the proposal (i) to clarify the language in the proposed rule change and (ii) to seek immediate effectiveness of the proposed rule change pursuant to section 19(b)(3)(A) of the Act and subparagraph

Continued

this proposal as one establishing or changing a due, fee or other charge imposed by the self-regulatory organization under section 19(b)(3)(A)(ii) of the Act[4] and Rule 19b–4(f)(2) thereunder,[5] which renders the proposed rule change effective upon filing with the Commission. The Commission is publishing this notice to solicit comments on the proposed rule change from interested persons.

I. Self-Regulatory Organization's Statement of the Terms of Substance of the Proposed Rule Change

The Exchange proposes to amend its Floor Operations Fee Schedule to include a provision for the pass-through of miscellaneous trading related fees. The text of the proposed rule change is below. Proposed new language is in *italics.*

* * * * *

Floor Operation Fees	
(1) Occupancy/Technology:	
Occupancy Fee	$500.00 per post per month.
Specialist/Floor Trader Technology Fee	$500.00 per Beacon terminal per month.
Floor Broker Technology Fee	$100.00 per Beacon terminal per month.
Security Routing Fee	$500.00 per month per Beacon user-ID that has stocks routed to it.
Floor Facility Fee	$250.00 per person that regularly accesses the trading floor.
Electronic Trading Permit Fee	$1,000.00 per trader trading from a remote location per month.
(2) Specialist Post Clearing and Cashiering:	
Post Cashiering Fee	$750.00 per specialist book for first 3 books per firm. $100.00 per specialist book for any books in excess of 3 per firm.
Clearing Fee	$.05 per trade.
(3) *Listed* Specialist Trade Processing Fees/Credits:	
Pre-Opening Trades	No Charge.
Trades in CTA Securities ranked 1,001 and greater	No Charge (BSE executions only).
Round lot	$.50 per order.
Odd Lot Trades (includes CSI Issues)	$.05 per order ($400 maximum per account).
Trading Account Trades	$1.50 per order.
ETF Trade Credit	$2.00 per trade (maximum annual credit capped at total amount paid in upfront annual registration fees).

Listed Securities	
A. Maximum Total Round lot/Odd lot charges:	
CTA Trade Rank:	Monthly Transaction Fee Maximum
1–50	$400.
51–100	$300.
101–500	$250.
501+	$0*.
* Includes BSE executions only. For all other executions, the applicable trade rate will apply.	
B. Credit:	
Primary Specialist	$.50 per trade (based on Competing Specialist trade volume).
(Total of the assessed fees for round lot/odd lot trades and trade credits will not be less than zero on a per issue basis)	
(4) Other Charges:	
ITS User Fee	$.003 per share on net outbound specialist trades (charge for outgoing trades offset by cumulative credit for incoming trades); No charge for non-specialist firms.
Quotation Services	Member assumes 100% of cost.
Specialist Margin Account Financing	Charged daily at current broker call rate.
Solely Listed Issue Credit	$50.00 Credit per issue traded.
Miscellaneous Trading Charges	*Direct pass through of all miscellaneous trading charges, such as Nasdaq fees, other market center access fees, ECN access fees, trading-related telecommunications charges, market data service charges, and other similar fees and charges.*
Miscellaneous Administrative Charges	*At cost for phone, postage, courier service, fax usage, after hours BSE staff assistance and other applicable items.*
Late Fees	1.5% will be charged on outstanding balances as of the last calendar day of the month.

* * * * *

II. Self-Regulatory Organization's Statement of the Purpose of, and Statutory Basis for, the Proposed Rule Change

In its filing with the Commission, the Exchange included statements concerning the purpose of and basis for the proposed rule change and discussed any comments it received on the proposed rule change. The text of these statements may be examined at the places specified in Item IV below. The Exchange has prepared summaries, set forth in Sections A, B, and C below, of the most significant aspects of such statements.

A. Self-Regulatory Organization's Statement of the Purpose of, and Statutory Basis for, the Proposed Rule Change

1. Purpose

The purpose of the proposed rule change is to amend the Exchange's Floor Operation Fee schedule to include a

(f)(2) of Rule 19b–4 thereunder. *See* letter dated April 22, 2003, from John Boese, Vice President, Legal and Compliance, Exchange, to Katherine England, Assistant Director, Division of Market Regulation, Commission. For purposes of calculating the 60-day period within which the Commission may summarily abrogate the proposed rule change under section 19(b)(3)(C) of the Act, the Commission considers that the period to commence on April 22, 2003, the date the Exchange filed Amendment No. 1. *See* 15 U.S.C. 78s(b)(3)(C).

[4] 15 U.S.C. 78s(b)(3)(A)(ii).

[5] 17 CFR 240.19b–4(f)(2).

provision for the pass-through of all miscellaneous fees to its members who incur such charges as a result of trading activity on the Exchange. The provision would allow for, among other things, as applicable, the pass-through of all Nasdaq fees, other market center access fees, ECN access fees, trading-related telecommunications charges, market data service charges, and other similar charges.

2. Statutory Basis

The Exchange believes that the proposed rule change is consistent with section 6 of the Act,[6] in general, and section 6(b)(4) of the Act,[7] in particular, in that it provides for the equitable allocation of reasonable dues, fees, and other charges among its members.

B. Self-Regulatory Organization's Statement on Burden on Competition

The Exchange does not believe that the proposed rule change will result in any burden on competition that is not necessary or appropriate in furtherance of the purposes of the Act.

C. Self-Regulatory Organization's Statement on Comments on the Proposed Rule Change Received From Members, Participants or Others

The Exchange has neither solicited nor received comments on the proposed rule change.

III. Date of Effectiveness of the Proposed Rule Change and Timing for Commission Action

The proposed rule change has become immediately effective pursuant to section 19(b)(3)(A)(ii) of the Act,[8] and subparagraph (f)(2) of Rule 19b–4 thereunder,[9] in that it establishes or changes a due, fee, or other charge imposed by the self-regulatory organization. At any time within 60 days of the filing of such proposed rule change, the Commission may summarily abrogate the rule change if it appears to the Commission that such action is necessary or appropriate in the public interest, for the protection of investors, or otherwise in furtherance of the purposes of the Act.

IV. Solicitation of Comments

Interested persons are invited to submit written data, views, and arguments concerning the foregoing, including whether the proposed rule change is consistent with the Act. Persons making written submissions should file six copies thereof with the Secretary, Securities and Exchange Commission, 450 Fifth Street, NW., Washington, DC 20549–0609. Copies of the submission, all subsequent amendments, all written statements with respect to the proposed rule change that are filed with the Commission, and all written communications relating to the proposed rule change between the Commission and any person, other than those that may be withheld from the public in accordance with the provisions of 5 U.S.C. 552, will be available for inspection and copying in the Commission's Public Reference Room. Copies of such filing will also be available for inspection and copying at the principal office of the Exchange. All submissions should refer to File No. SR–BSE–2003–03 and should be submitted by June 5, 2003.

For the Commission, by the Division of Market Regulation, pursuant to delegated authority.[10]

Margaret H. McFarland,

Deputy Secretary.

[FR Doc. 03–12147 Filed 5–14–03; 8:45 am]

BILLING CODE 8010–01–P

[6] 15 U.S.C. 78f.

[7] 15 U.S.C. 78f(b)(4).

[8] 15 U.S.C. 78s(b)(3)(A)(ii).

[9] 17 CFR 240.19b–4(f)(2).

[10] 17 CFR 200.30–3(a)(12).

SECURITIES AND EXCHANGE COMMISSION

[Release No. 34–47818; File No. SR–CBOE–2003–02]

Self-Regulatory Organizations; Order Granting Approval of Proposed Rule Change by the Chicago Board Options Exchange, Inc., Relating to the Reporting of Other Affiliations of Associated Persons to the Exchange

May 8, 2003.

I. Introduction

On January 9, 2003, the Chicago Board Options Exchange, Inc. (''CBOE'' or ''Exchange''), filed with the Securities and Exchange Commission (''Commission''), pursuant to section 19(b)(1) of the Securities Exchange Act of 1934 (''Act''),[1] and rule 19b-4 thereunder,[2] a proposed rule change relating to a member's obligation to report other affiliations of its Associated Persons (''APs'') to the Exchange. Notice of the proposed rule change was published for comment in the **Federal Register** on February 5, 2003.[3] The Commission received one comment letter on the proposed rule change.[4] On March 10, 2003, CBOE filed Amendment No. 1 to the proposed rule change.[5] This order approves the proposed rule change, as amended.

II. Description of the Proposed Rule Change

A. Text of the Proposed Rule Change

The Exchange proposes to amend its rules requiring members to report outside business affiliations of their personnel to the Exchange. Below is the text of the proposed rule change. Proposed new language is *italicized.* Proposed deletions are in [brackets].[6]

* * * * *

Chicago Board Options Exchange, Inc.

Rules

* * * * *

Rule 3.6A. Qualification and Registration of Certain Associated Persons

(a) Financial/Operations Principal. Each individual member or member organization subject to Exchange Act rule 15c3–1 shall designate a Financial/Operations Principal. The duties of a Financial/Operations Principal shall include taking appropriate actions to assure that the member complies with applicable financial and operational requirements under the rules and the Exchange Act, including but not limited to those requirements relating to the submission of financial reports and the maintenance of books and records. Each Financial/Operations Principal is required to have successfully completed the Financial and Operations Principal Examination (Series 27 Exam). Each Financial/Operations Principal designated by a member shall be registered in that capacity with the Exchange in a form and manner prescribed by the Exchange. A Financial/Operations Principal of a

[1] 15 U.S.C. 78s(b)(1).

[2] 17 CFR 240.19b–4.

[3] *See* Securities Exchange Act Release No. 47290 (January 30, 2003), 68 FR 5945 (''Notice'').

[4] March 6, 2003 letter from Brian C. Underwood, Senior Vice President—Director of Compliance, A.G. Edwards & Sons, Inc., to Jonathan Katz, Secretary, Commission. The commenter expressed support for the proposed rule change.

[5] In Amendment No. 1, CBOE added a comma immediately following the phrase ''Financial / Operations Principal'' in revised CBOE rule 9.4. This grammatical correction clarifies the scope of application of rule 9.4(b) to Registered Options Principals and Sales Supervisors, in accordance with the intent of the proposal, as described in the Notice. This is a technical amendment to the proposed rule change that does not require notice and comment. *See* e-mail from Jaime Galvan, Attorney, CBOE, to Andrew Shipe, Special Counsel, Division of Market Regulation, Commission, dated March 10, 2003 (''Amendment No. 1'').

[6] The text of the proposed rule change was published in the notice. This publication of rule text corrects a typographical error in the notice to show that the phrase ''and Registered Representative'' in revised CBOE rule 9.4(b) should have been marked as deleted by placing it in [brackets].

member may be a full-time employee [of the member], [or with the prior written approval of the Exchange, may be] a part-time employee or independent contractor of the member. *Member firms for which the Exchange is the Designated Examining Authority (''DEA'') must provide prompt written notice to the Exchange's Department of Financial and Sales Practice Compliance for each person designated as a Financial/Operations Principal reporting whether such person is a full-time employee, part-time employee, independent contractor or has any outside business affiliations.*

(b) No change.

** * * Interpretations and Policies:*

.01—.03 No change.

* * * * *

CHAPTER IX

* * * * *

Doing Business with the Public

Rule 9.4. Other Affiliations of Registered [Representatives] *Associated Persons*

(a) No person associated with a member in any registered capacity shall be employed by, or accept compensation from, any other person or entity as a result of any business activity, other than a passive investment, outside the scope of his/her relationship with his/her employer firm, unless the person has provided prompt written notice to the member and has received prior written consent of the member.

(b) Except with *the prior written consent of the member and* [express] *prompt* written *notice to* [permission of] the Exchange, every Registered Options Principal, *Sales Supervisor, and Financial/Operations Principal, registered with a member for which the Exchange is the Designated Examining Authority (''DEA'')* [and Registered Representative] shall devote his/*her* entire time during business hours to the business of the member organization employing [him] *or compensating him/her.* [or to the business of its affiliates which are engaged in the transaction of business as a broker or dealer in securities or commodities or in such other businesses as have been approved by the Exchange.]

* * * * *

B. Description of the Proposed Rule Change

Currently, CBOE rule 9.4 (''Other Affiliations of Registered Representatives'') requires a member firm's Registered Representatives and Registered Options Principals (''ROPs'') to obtain express written permission from the Exchange in order to engage in any business, other than that of their member organization, during business hours. Further, CBOE rule 3.6A (''Qualification and Registration of Certain Associated Persons'') provides that a member firm may employ a part-time employee or independent contractor as a Financial/Operations Principal, provided that it receives the prior written approval of the Exchange to do so.

Pursuant to the proposed rule change, CBOE would amend rule 9.4 to apply to all of a member firm's registered APs. The rule would now provide that, other than in the case of a passive investment, all such persons would be required to give prompt written notice to the employing member, and to receive the member's prior written consent, with respect to outside business activities. Where CBOE is the firm's Designated Examining Authority, and the AP in question is a ROP, Sales Supervisor, or Financial / Operations Principal, the CBOE will also require prompt written notice to the Exchange. CBOE rule 3.6A's restrictions on FINOPs would also be amended with changes corresponding to the new provisions of rule 9.4.

III. Discussion

After careful review, the Commission finds that the proposed rule change is consistent with the requirements of the Act and the rules and regulations thereunder applicable to a national securities exchange.[7] In particular, the Commission believes that the proposal is consistent with section 6(b)(5) of the Act,[8] which requires, among other things, that the rules of an exchange be designed to promote just and equitable principles of trade and to protect investors and the public interest.

The Commission believes that the proposed rule change will provide CBOE with information that it needs to regulate its member firms. The Commission further notes that the proposed rules are similar to rules of other self-regulatory organizations.[9] Finally, the proposed rule change does not alter in any way the obligation of a CBOE member or member organization to oversee the operation of its business and supervise the performance of its associated persons, including any potential conflicts of interest involving any associated person, in a manner that assures compliance with the Act and rules and regulations thereunder, as well as applicable rules of the CBOE. To this end, the Commission notes that CBOE member firms will be obligated to review and approve in writing any outside business arrangements of their personnel.

Therefore, the Commission believes that the proposal is consistent with section 6(b)(5) of the Act,[10] which requires, among other things, that the rules of an exchange be designed to promote just and equitable principles of trade, and to protect investors and the public interest.

IV. Conclusion

It is therefore ordered, pursuant to section 19(b)(2) of the Act,[11] that the proposed rule change, as amended (File No. SR–CBOE–2003–02) be, and it hereby is, approved.

For the Commission, by the Division of Market Regulation, pursuant to delegated authority.[12]

Margaret H. McFarland,

Deputy Secretary.

[FR Doc. 03–12145 Filed 5–14–03; 8:45 am]

BILLING CODE 8010–01–P

[7] In approving this proposal, the Commission has considered the proposed rule's impact on efficiency, competition, and capital formation. 15 U.S.C. 78(c)(f).

[8] 15 U.S.C. 78f(b)(5).

[9] *See* American Stock Exchange rule 342(b), National Association of Securities Dealers rule 3030, New York Stock Exchange rule 346(b), Pacific Exchange rule 1.26(d) and Philadelphia Stock Exchange rule 793.

[10] 15 U.S.C. 78f(b)(5).

[11] 15 U.S.C. 78s(b)(2).

[12] 17 CFR 200.30–3(a)(12).

SECURITIES AND EXCHANGE COMMISSION

[Release No. 34–47812; File No. SR–CME–2003–01]

Self-Regulatory Organizations; Notice of Filing and Order Granting Accelerated Approval of a Proposed Rule Change by the Chicago Mercantile Exchange To Adopt, on a Permanent Basis, a Standard Under Which a Market Maker Can Qualify for Exclusion From CME's Margin Rules

May 7, 2003.

Pursuant to section 19(b)(1) of the Securities Exchange Act of 1934 (''Act''),[1] and Rule 19b–4 thereunder,[2] notice is hereby given that on May 7, 2003, the Chicago Mercantile Exchange (''CME'' or ''Exchange'') filed with the Securities and Exchange Commission (''Commission'') the proposed rule change as described in Items I and II below, which Items have been prepared by CME. The Commission is publishing this notice to solicit comments on the proposed rule change from interested

[1] 15 U.S.C. 78s(b)(1).

[2] 17 CFR 240.19b–4.

persons and to grant accelerated approval of the proposed rule change.

I. Self-Regulatory Organization's Statement of the Terms of Substance of the Proposed Rule Amendments

CME proposes to adopt, on a permanent basis, CME Rule 930.B.2.b.(3) (herein referred to as ''Market Maker Exclusion''). On November 8, 2002, the Commission approved the Market Maker Exclusion on a pilot basis, ending May 7, 2003 (the ''Pilot'').[3] CME believes that permanent approval of the Market Maker Exclusion is consistent with the jointly adopted margin rules of the Commission and the Commodity Futures Trading Commission (''CFTC'') (collectively, ''Commissions'').

Below is the text of the proposed rule change that CME proposes to adopt on a permanent basis.

* * * * *

930.B. Performance Bond Rates

1. Non-Security Futures (No Change).
2. Security Futures

a.–b. (1) and (2) (No change).

(3) The Market Maker:

(i) Is assigned to a group of Security Futures Contracts listed on the Exchange that is either unlimited in nature (''Unlimited Assignment''); or, is assigned to no more that 20% of the Security Futures Contracts listed on the Exchange (''Limited Assignment'');

(ii) At least 75% of the Market Maker's total trading activity in Exchange Security Futures Contracts is in its assigned Security Futures Contracts, measured on a quarterly basis;

(iii) During at least 50% of the trading day the Market Maker has bids or offers in the market that are at or near the best market, except in unusual market conditions as determined by the Exchange (such as a fast market in either a Security Futures Contract or a security underlying a Security Futures Contract), with respect to at least 25% (in the case of an Unlimited Assignment) or at least one (in the case of a Limited Assignment) of its assigned Security Futures Contracts; and

(iv) The requirements in (ii) and (iii) are satisfied on (a) at least 90% of the trading days in each calendar quarter by Market Makers who have undertaken an Unlimited Assignment; or (b) at least 80% of the trading days in each calendar quarter by Market Makers who have undertaken a Limited Assignment; or (c) on at least 80% of the trading days in each calendar quarter by Market Makers who have undertaken either an Unlimited Assignment or Limited Assignment but where the Exchange is listing four (4) or fewer Security Futures Contracts.

For purposes of clauses (1) and (2) above, beginning on the 181st calendar day after the commencement of trading of Security Futures Contracts on the Exchange, a ''meaningful proportion of the total trading volume of Security Futures Contracts on the Exchange'' shall mean a minimum of 20% of such trading volume.

Any Market Maker that fails to comply with the applicable Rules of the Exchange, CFTC Regulations 41.41 through 41.49 and SEC Regulations 242.400 through 242.406 shall be subject to disciplinary action in accordance with Chapter 4. Appropriate sanctions in the case of any such failure shall include, without limitation, a revocation of such Market Maker's registration as a Security Futures Dealer.

c.–d. (No Change).

* * * * *

II. Self-Regulatory Organization's Statement of the Purpose of, and Statutory Basis for, the proposed Rule Change

In its filing with the Commission, the CME included statements concerning the purpose of, and basis for, the proposed rule change and discussed any comments it received on the proposed rule change. The text of these statements may be examined at the places specified in Item III below. The CME has prepared summaries, set forth in sections A, B, and C below, of the most significant aspects of such statements.

A. Self-Regulatory Organization's Statement of the Purpose of, and Statutory Basis for, the Proposed Rule Change

1. Purpose

The CME proposes to adopt, on a permanent basis, the Market Maker Exclusion, which sets forth the standards under which a CME member may be excluded from the Exchange's margin requirements as a ''market maker.'' The CME believes that the proposed rule change is consistent with Commission Rule 400(c)(2)(v) under the Act[4] and CFTC Rule 41.42(c)(2)(v),[5] which establish standards by which members of national securities exchanges may qualify as Security Futures Dealers and therefore be excluded from customer margin requirements for security futures.

The CME notes that the Market Maker Exclusion has not actually been deployed in practice at the Exchange to date. In addition, the CME notes that the Commission has received no comment letters on this matter during the pilot period. The CME proposes no changes to the Market Maker Exclusion and, therefore, CME proposes to adopt the proposed rule change on a permanent basis.

2. Statutory Basis

The CME believes that the proposed rule change is consistent with section 6(b)(5) of the Act[6] in that it promotes competition and is designed to prevent fraudulent and manipulative acts and practices, to promote just and equitable principles of trade, and to protect investors and the public interest. The CME believes that the proposed rule change is designed to accomplish these goals by permitting members to trade security futures, as permitted under the Commission's Rule.

B. Self-Regulatory Organization's Statement on Burden on Competition

The CME does not believe that the proposed rule change will have an impact on competition.

C. Self-Regulatory Organization's Statement on Comments on the Proposed Rule Change Received From Members, Participants, or Others

Comments on the proposed rule change have not been solicited and none have been received.

III. Solicitation of Comments

Interested persons are invited to submit written data, views and arguments concerning the foregoing, including whether the proposed rule change is consistent with the Act. Persons making written submissions should file six copies thereof with the Secretary, Securities and Exchange Commission, 450 Fifth Street, NW., Washington, DC 20549–0609. Copies of the submission, all subsequent amendments, all written statements with respect to the proposed rule change that are filed with the Commission, and all written communications relating to the proposed rule change between the Commission and any person, other than those that may be withheld from the public in accordance with the provisions of 5 U.S.C. 552, will be available for inspection and copying in the Commission's Public Reference

[3] *See* Securities Exchange Act Release No. 46792 (November 8, 2002), 67 FR 69273 (November 15, 2002).

[4] 17 CFR 242.400(c)(2)(v).

[5] 17 CFR 41.42(c)(2)(v).

[6] 15 U.S.C. 78f(b)(5).

Room. Copies of such filing will also be available for inspection and copying at the principal office of the CME. All submissions should refer to File No. SR–CME–2003–01 and should be submitted by June 5, 2003.

IV. Commission Findings and Order Granting Accelerated Approval of a Proposed Rule Change

The Commission finds that the proposed rule change is consistent with the requirements of the Act and the rules and regulations thereunder applicable to a national securities exchange.[7] In particular, the Commission believes that the proposed rule change is consistent with the requirements of section 6(b)(5) of the Act,[8] which requires, among other things, that the rules of the Exchange be designed to promote just and equitable principles of trade and, in general, to protect investors and the public interest.[9] In addition, the Commission believes that the proposed rule change is consistent with section 7(c)(2)(B) of the Act,[10] which provides, among other things, that the margin requirements for security futures must preserve the financial integrity of markets trading security futures, prevent systemic risk, be consistent with the margin requirements for comparable exchange-traded options, and provide that the margin levels for security futures may be no lower than the lowest level of margin, exclusive of premium, required for any comparable exchange-traded option.

The Commission believes that the CME's standards for market makers under Rule 930.B.2.b.(3) are consistent with the Act, and Rule 400(c)(2)(v) thereunder.[11] Specifically, Rule 400(c)(2)(v) provides that the Commissions' joint margin rules do not apply to a member of a national securities exchange that is registered with such exchange as a ''Security Futures Dealer'' pursuant to exchange rules that must meet several criteria, including a requirement that a Security Futures Dealer be required to ''to hold itself out as being willing to buy and sell security futures for its own account on a regular and continuous basis.'' The Commission believes that the affirmative obligations required by the CME pursuant to Rule 930.B.2.b.(3) satisfy this requirement.

The CME has requested that the Commission approve the proposed rule change prior to the thirtieth day after publication of notice of the filing in the **Federal Register**. The Commission finds good cause for approving the proposed rule change prior to the thirtieth day after the date of publication of notice of filing thereof in the **Federal Register**. The Commission believes that accelerated approval of the proposed rule change should enable CME members to trade security futures as market makers under the Market Maker Exclusion without undue delay. The Commission notes that it approved the Market Maker Exclusion as a temporary pilot to give members of the public an opportunity to comment on the substance of the Market Maker Exclusion. The Commission received no comments on the Pilot. Accordingly, the Commission finds good cause, consistent with section 19(b)(2) of the Act,[12] to approve the proposed rule change prior to the thirtieth day after publication of the notice of filing.

V. Conclusion

It is therefore Ordered, pursuant to section 19(b)(2) of the Act,[13] that the proposed rule change (File No. SR–CME–2003–01) be approved, on a permanent basis, on an accelerated basis.

For the Commission, by the Division of Market Regulation, pursuant to delegated authority.[14]

Margaret H. McFarland,

Deputy Secretary.

[FR Doc. 03–12148 Filed 5–14–03; 8:45 am]

BILLING CODE 8010–01–P

[7] 15 U.S.C. 78s(b)(2).

[8] 15 U.S.C. 78f(b)(5).

[9] In approving the proposed rule, the Commission has considered the proposed rule's impact on efficiency, competition, and capital formation. 15 U.S.C. 78c(f).

[10] 15 U.S.C. 78g(c)(2)(B).

[11] 17 CFR 240.400(c)(2)(v).

[12] 15 U.S.C. 78s(b)(2).

[13] 15 U.S.C. 78s(b)(2).

[14] 17 CFR 200.30–3(a)(12).

SECURITIES AND EXCHANGE COMMISSION

[Release No. 34–47817; File No. SR–ISE–2003–10]

Self-Regulatory Organizations; Notice of Filing of Proposed Rule Change and Amendment No. 1 Thereto by the International Securities Exchange, Inc. To Amend Its Obvious Error Rule

May 8, 2003.

Pursuant to section 19(b)(1) of the Securities Exchange Act of 1934 (''Act''),[1] and Rule 19b-4 thereunder,[2] notice is hereby given that on February 28, 2003, the International Securities Exchange, Inc. (''ISE'' or ''Exchange'') filed with the Securities and Exchange Commission (''Commission'') the proposed rule change as described in Items I, II, and III below, which Items have been prepared by the Exchange. On May 1, 2003, the ISE submitted Amendment No. 1 to the proposed rule change.[3] The Commission is publishing this notice to solicit comments on the proposed rule change, as amended, from interested persons.

I. Self-Regulatory Organization's Statement of the Terms of Substance of the Proposed Rule Change

The Exchange is proposing to amend ISE Rule 720 (the ''Obvious Error Rule''). Proposed new language is *italicized;* proposed deletions are in [brackets].

* * * * *

Rule 720. Obvious Errors

The Exchange shall either bust a transaction or adjust the execution price of a transaction that results from an Obvious Error as provided in this Rule.

(a) Definition of Obvious Error. For purposes of this Rule only, an Obvious Error will be deemed to have occurred when *the execution price of a transaction is higher or lower than the Theoretical Price for the series by an amount equal to at least the amount shown below:*

Theoretical price	*Minimum amount*
Below $2	*.25*
$2 to $5	*.40*
Above $5 to $10	*.50*
Above $10 to $20	*.80*
Above $20	*1.00*

[(1) If the Theoretical Price of the option is less than $3.00:

(i) During regular market conditions (including rotations), the execution price of a transaction is higher or lower than the Theoretical Price for the series by an amount of 35 cents or more; or

(ii) During fast market conditions (*i.e.*, the Exchange has declared a fast market status for the option in question), the execution price of a transaction is higher or lower than the Theoretical Price for the series by an amount of 50 cents or more.

(2) If the Theoretical Price of the option is $3.00 or higher:

(i) During regular market conditions (including rotations), the execution

[1] 15 U.S.C. 78s(b)(1).

[2] 17 CFR 240.19b–4.

[3] *See* letter from Michael Simon, Senior Vice President and General Counsel, ISE, to Nancy Sanow, Assistant Director, Division of Market Regulation, Commission, dated April 30, 2003 (''Amendment No. 1''). In Amendment No. 1, the ISE replaced the proposed rule text in its entirety.

price of a transaction is higher or lower than the Theoretical Price for the series by an amount equal to at least two (2) times the maximum bid/ask spread allowed for the option, so long as such amount is 50 cents or more; or

(ii) During fast market conditions (*i.e.*, the Exchange has declared a fast market status for the option in question), the execution price of a transaction is higher or lower than the Theoretical Price for the series by an amount equal to at least three (3) times the maximum bid/ask spread allowed for the option, so long as such amount is 50 cents or more.]

(b) Definition of Theoretical Price. For purposes of this Rule only, the Theoretical Price of an options *series* is:

(1) If the series is traded on at least one other options exchange, the last bid *price with respect to an erroneous sell transaction,* [or] *and last* offer *price with respect to an erroneous buy transaction,* just prior to the trade, [found on] *disseminated by* the *competing options* exchange that has the most liquidity in that option [as provided in Supplementary Material .02 below]; or

(2) If there are no quotes for comparison purposes, as determined by designated personnel in the Exchange's market control center (''Market Control'').

[(c) Adjustments. Where the execution price of a transaction executed as the result of an Obvious Error is adjusted, the adjusted price will be:

(1) The Theoretical Price of the option in the case where the erroneous price is displayed in the market and subsequently executed by quotes or orders that did not exist in the System at the time the erroneous price was entered; or

(2) The last bid or offer, just prior to the trade, found on the exchange that has the most liquidity in that option as provided in Supplementary Material .03 below in the case where an erroneous price executes against quotes or orders already existing in the System at the time the erroneous price was entered.

(d)] (*c*) Obvious Error Procedure. Market Control shall administer the application of this Rule as follows.

(1) *Notification.* If a market maker on the Exchange believes that it participated in a transaction that was the result of an Obvious Error, it must notify Market Control within five (5) minutes of the execution. If an Electronic Access Member believes an order it executed on the Exchange was the result of an Obvious Error, it must notify Market Control within twenty (20) minutes of the execution. Absent unusual circumstances, Market Control will not grant relief under this Rule unless notification is made within the prescribed time periods.

(2) *Adjust or Bust.* Market Control will determine whether there was an Obvious Error as defined above. If it is determined that an Obvious Error has occurred, Market Control shall take one of the [following] actions *listed below.*[:] *Upon taking final action, Market Control shall promptly notify both parties to the trade.*

(i) [w]*W*here each party to the transaction is a market maker on the Exchange, the execution price of the transaction will be adjusted *by Market Control to the prices provided in paragraphs (A) and (B) below* unless both parties agree to *adjust the transaction to a different price or agree to* bust the trade within ten (10) minutes of being notified by Market Control of the Obvious Error.[; or]

(A) Erroneous buy transactions will be adjusted to their Theoretical Price (1) plus $.15 if the Theoretical Price is under $3, and (2) plus $.30 if the Theoretical Price is at or above $3.

(B) Erroneous sell transactions will be adjusted to their Theoretical Price (1) minus $.15 if the Theoretical Price is under $3, and (2) minus $.30 if the Theoretical Price is at or above $3.

(ii) [w]*W*here at least one party to the Obvious Error is not a market maker on the Exchange, the trade will be busted *by Market Control* unless both parties agree to [adjust the] *an adjustment* price [of] *for* the transaction within thirty (30) minutes of being notified by Market Control of the Obvious Error. [Upon taking final action, Market Control shall promptly notify both parties to the trade.]

(e) Obvious Error Panel.

(1) *Composition.* An Obvious Error Panel will be comprised of representatives from four (4) Members. Two (2) of the representatives must be directly engaged in market making activity and two (2) of the representatives must be employed by an Electronic Access Member.

(2) [Request for] *Scope of Panel's* Review. If a party affected by a determination made under this Rule so requests within the time permitted *in (3)* below, the Obvious Error Panel will review decisions made by Market Control under this Rule, including whether an Obvious Error occurred, whether the correct Theoretical Price was used, and whether an adjustment was made at the correct price. A party may also request that the Obvious Error Panel provide relief [under] *as provided in* this Rule in cases where the party failed to provide the notification required in paragraph [(d)]*(c)*(1) and Market Control declined to grant an extension, but unusual circumstances must merit special consideration.

(3) Procedure for Requesting Review. A request for review must be made in writing within thirty (30) minutes after a party receives verbal notification of a final determination by Market Control under this Rule, except that if notification is made after 3:30 p.m. Eastern Time, either party has until 9:30 a.m. Eastern Time the next trading day to request review. The Obvious Error Panel shall review the facts and render a decision on the day of the transaction, or the next trade day in the case where a request is properly made after 3:30 on the day of the transaction or where the request is properly made the next trade day.

[(3)] *(4)* Panel Decision. The Obvious Error Panel may overturn or modify an action taken by Market Control under this Rule upon agreement by a majority of the Panel representatives. All determinations by the Obvious Error Panel shall constitute final Exchange action on the matter at issue.

Supplementary Material to Rule 720

[.01 For purposes of paragraph (a) of this Rule, the maximum bid/ask spread shall be the maximum bid/ask spread allowed under Rule 803(b), unless a wider spread has been allowed by the Exchange for the option because of unusual market conditions, such as high market volatility.

.02 The Theoretical Price will be determined under paragraph (b)(1) above as follows: (i) The bid price from the exchange providing the most volume will be used with respect to an erroneous bid price entered on the Exchange, and (ii) the offer price from the exchange providing the most volume will be used with respect to an erroneous offer price entered on the Exchange.

.03 The price to which a transaction is adjusted under paragraph (c)(2) above will be as follows: (i) The bid price from the exchange providing the most volume for the option will be used with respect to an erroneous offer price entered on the Exchange, and (ii) the offer price from the exchange providing the most volume for the option will be used with respect to an erroneous bid price entered on the Exchange. If there are no quotes for comparison purposes, the adjustment price will be determined by Market Control.]

[.04] *.01* When Market Control determines that an Obvious Error has occurred and action is warranted under paragraph [(d)]*(c)*(2) above, the identity of the parties to the trade will be disclosed to each other in order to encourage conflict resolution.

[.05] *.02* To qualify as a representative of an Electronic Access Member on an Obvious Error Panel, a person must (i) be employed by a Member whose revenues from options market making activity do not exceed ten percent (10%) of its total revenues; or (ii) have as his or her primary responsibility the handling of Public Customer orders or supervisory responsibility over persons with such responsibility, and not have any responsibilities with respect to market making activities.

[.06] *.03* The Exchange shall designate at least ten (10) market maker representatives and at least ten (10) Electronic Access representatives to be called upon to serve on Obvious Error Panels as needed. In no case shall an Obvious Error Panel include a person related to a party to the trade in question. To the extent reasonably possible, the Exchange shall call upon the designated representatives to participate on an Obvious Error Panel on an equally frequent basis.

[.07] *.04* All determinations made by the Exchange, Market Control or an Obvious Error Panel under this Rule shall be rendered without prejudice as to the rights of the parties to the transaction to submit a dispute to arbitration.

.05 Buyers of options with a zero bid and $.05 offer (i.e., a Theoretical Price of $.05) may request that their execution be busted if at least the three strikes below (for calls) or above (for puts) in the same options class were quoted with a zero bid and $.05 offer at the time of the execution. Such buyers must follow the procedures of paragraph (c)(1) above.

.06 For purposes of paragraph (b)(1) of Rule 720, the competing options exchange with the most liquidity will be the options exchange that had the highest total contract volume in the options class for the previous two months (e.g., if an obvious error occurs on March 9, the total contract volume from January 8 to March 8 will be used).

.07 For purposes of Rule 720, an ''erroneous sell transaction'' is one in which the price received by the person selling the option is erroneously low, and an ''erroneous buy transaction'' is one in which the price received by the person purchasing the option is erroneously high.

* * * * *

II. Self-Regulatory Organization's Statement of the Purpose of, and Statutory Basis for, the Proposed Rule Change

In its filing with the Commission, the Exchange included statements concerning the purpose of, and basis for, the proposed rule change and discussed any comments it received on the proposed rule change. The text of these statements may be examined at the places specified in Item IV below. The Exchange has prepared summaries, set forth in Sections A, B, and C below, of the most significant aspects of such statements.

A. Self-Regulatory Organization's Statement of the Purpose of, and Statutory Basis for, the Proposed Rule Change

1. Purpose

The Exchange proposes to amend ISE Rule 720 to simplify its application. When the Exchange first adopted the Obvious Error Rule,[4] it was the first such rule of its kind on any options exchange. During the nearly two-year period since the Rule was approved by the Commission, the Exchange made minor adjustments to the Rule to address specific issues that arose.[5]

The current proposed rule change represents the result of a comprehensive analysis of the effectiveness of the Rule in addressing obvious error situations. After consultation with Members, the Exchange believes that the structure and standards of the Rule have worked very well. However, the Rule itself is unnecessarily complex, which can create confusion and uncertainty regarding when trades qualify as obvious errors and the prices to which qualifying trades may be adjusted. Accordingly, the Exchange proposes the changes described herein.

Determining Whether or Not an Obvious Error Has Occurred

Currently, under paragraph (b) of the Rule and Supplementary Material .02, the Theoretical Price for an option is determined by the bid price on the options exchange other than ISE that has the most volume in the option for erroneous buy orders or bid quotes. Similarly, the Theoretical Price for an option is determined by the offer price on the other options exchange for erroneous sell orders or offer quotes. Determining the Theoretical Price in this manner is counter-intuitive to market participants, which generally look to the offer as the price at which one can buy and the bid as the price at which one can sell. Moreover, under paragraph (a) of the Rule, the required deviation from the Theoretical Price necessary to qualify the trade as an obvious error is a multiple of the option's maximum allowable bid/ask spread, with a greater multiple applied in fast market conditions.

The Exchange proposes to amend the Rule to provide that the Theoretical Price for trades caused by erroneous buy orders or bid quotes will be determined by the offer from the other options exchange, and that the Theoretical Price of trades caused by erroneous sell orders or offer quotes will be determined by the bid from the other options exchange. Because the side to which the Rule will look to determine the Theoretical Price is switched, the Exchange proposes to reduce the required deviation necessary for a trade to qualify as an obvious error to the amount equivalent to the maximum bid/ask spread for the series, rather than a multiple of the allowable spread. The result of these two changes taken together is not material for options priced $3 and higher, as the price at which a trade must occur to qualify as an obvious error does not change.[6] For options priced under $3, the proposed rule change will increase the deviation required for a trade to qualify as an obvious error.

As described below, the Exchange is also proposing a manner in which to address obvious errors in the purchase of certain very low-priced options. Finally, the Exchange proposes to eliminate entirely the current rule's distinction between regular market condition and fast market condition, as the higher standard for fast market conditions is unnecessary in the Exchange's electronic environment.

Adjusting Prices

Paragraph (c) in Supplementary Material .03 of the current Rule governs the price to which a trade is adjusted when there is an obvious error. Currently, the price used is dependent on whether the erroneous price existed in the market first, or whether the erroneous price executed against an existing order or quote in the book. The Exchange proposes to apply a single adjustment standard to all executions that qualify as an obvious error: erroneous buy executions will be adjusted to the Theoretical Price (the offer) plus $.15 for options under $3, and plus $.30 for options as or above $3.

[4] *See* Securities Exchange Act Release No. 44376 (June 1, 2001), 66 FR 30772 (June 7, 2001).

[5] *See* Securities Exchange Act Release No. 46110 (June 25, 2002), 67 FR 44487 (July 2, 2002).

[6] For example, assume the quote on the options exchange other than ISE for an option is $6 to $6.50. Under the current Rule, the execution price of a buy order must be $7 higher, *i.e.*, the Theoretical Price (the bid from the other options exchange) plus an amount equal to twice the allowable spread ($.50). Under the amended Rule, the execution price of the buy order must still be $7 or higher, *i.e.*, the Theoretical Price (the offer from the other options exchanges) plus an amount equal to the allowable spread ($.50).

Erroneous sell executions will be adjusted to the Theoretical Price (the bid) minus $.15 for options under $3, and minus $.30 for options at or above $3. This change addresses two issues under the current Rule. First, it simplifies the determination of the appropriate adjustment price and creates certainty for Members who generally do not know which price was first in the market at the time a trade occurs. Second, it protects against abuse of the Rule, as the adjustment price is not as favorable as what the party making the error would have received had it not made an error.

The ''Nickel Rule''

The current obvious error Rule does not contain any special criteria for executions in options with a quote of $0 to $.05 (no bid, offered at a nickel). The Exchange proposes to create a special standard for no-bid buyers, as a purchase of these options is extremely rare and most often the result of an error. Under proposed Supplementary Material .05, buyers of options priced at no bid, offered at a nickel, may request that their execution be busted if at least the three strike prices below (for calls) or above (for puts) in the same class were quoted no bid, offered at a nickel at the time of the erroneous execution. The buyer must notify market control as otherwise required under the Rule.

2. Statutory Basis

The Exchange believes that the proposed rule change is consistent with section 6(b) of the Act [7] in general, and furthers the objectives of section 6(b)(5)[8] in particular, in that it is designed to prevent fraudulent and manipulative acts and practices, to promote just and equitable principles of trade, to remove impediments to and perfect the mechanism for a free and open market and a national market system, and, in general, to protect investors and the public interest.

B. Self-Regulatory Organization's Statement on Burden on Competition

The Exchange does not believe that the proposed rule change will impose any burden on competition that is not necessary or appropriate in furtherance of the purposes of the Act.

[7] 15 U.S.C. 78f(b).

[8] 15 U.S.C. 78f(b)(5).

C. Self-Regulatory Organization's Statement on Comments on the Proposed Rule Change Received From Members, Participants, or Others

The Exchange did not solicit or receive written comments on the proposed rule change.

III. Date of Effectiveness of the Proposed Rule Change and Timing for Commission Action

Within 35 days of the date of publication of this notice in the **Federal Register** or within such longer period (i) as the Commission may designate up to 90 days of such date if it finds such longer period to be appropriate and publishes its reasons for so finding or (ii) as to which the Exchange consents, the Commission will:

(A) By order approve such proposed rule change, or

(B) Institute proceedings to determine whether the proposed rule change should be disapproved.

IV. Solicitation of Comments

Interested persons are invited to submit written data, views, and arguments concerning the foregoing, including whether the proposed rule change, as amended, is consistent with the Act. Persons making written submissions should file six copies thereof with the Secretary, Securities and Exchange Commission, 450 Fifth Street, NW., Washington, DC 20549–0609. Copies of the submission, all subsequent amendments, all written statements with respect to the proposed rule change that are filed with the Commission, and all written communications relating to the proposed rule change between the Commission and any person, other than those that may be withheld from the public in accordance with the provisions of 5 U.S.C. 552, will be available for inspection and copying at the Commission's Public Reference Room. Copies of such filing will also be available for inspection and copying at the principal office of the Exchange. All submissions should refer to File No. SR–ISE–2003–10 and should be submitted by June 5, 2003.

For the Commission, by the Division of Market Regulation, pursuant to delegated authority.[9]

Margaret H. McFarland,

Deputy Secretary.

[FR Doc. 03–12146 Filed 5–14–03; 8:45 am]

BILLING CODE 8010–01–P

[9] 17 CFR 200.30–3(a)(12).

SECURITIES AND EXCHANGE COMMISSION

[Release No. 34–47810; File No. SR–OC–2003–05]

Self-Regulatory Organizations; Notice of Filing and Order Granting Accelerated Approval of a Proposed Rule Change and Amendment No. 1 Thereto by OneChicago, LLC To Adopt, on a Permanent Basis, the Standards Under Which a Market Maker Can Qualify for Exclusion From OneChicago's Margin Rules

May 7, 2003.

Pursuant to section 19(b)(1) of the Securities Exchange Act of 1934 (''Act''),[1] and Rule 19b–4 thereunder,[2] notice is hereby given that on May 5, 2003, OneChicago, LLC (''OneChicago'' or ''Exchange'') filed with the Securities and Exchange Commission (''Commission'' or ''SEC'') the proposed rule change as described in Items I and II below, which Items have been prepared by OneChicago. On May 6, 2003, OneChicago submitted Amendment No. 1 to the proposed rule change.[3] The Commission is publishing this notice to solicit comments on the proposed rule change, as amended, from interested persons and to grant accelerated approval of the proposed rule change.

I. Self-Regulatory Organization's Statement of the Terms of Substance of the Proposed Rule Change

OneChicago proposes to adopt, on a permanent basis, Rule 515(n)(ii)(C) (''Exclusion for Market Makers'') (herein referred to as ''Margin Rule''). On November 7, 2002, the Commission approved the Margin Rule on a pilot basis, ending May 7, 2003 (''the Pilot'').[4] OneChicago believes that permanent approval of the Margin Rule is consistent with the jointly adopted margin rules of the Commission and the Commodity Futures Trading Commission (''CFTC'') (collectively, ''Commissions'').

Below is the text of the proposed rule change that OneChicago proposes to adopt on a permanent basis.

* * * * *

[1] 15 U.S.C. 78s(b)(1).

[2] 17 CFR 240.19b–4.

[3] *See* letter from Madge M. Hamilton, Deputy General Counsel, OneChicago, to Theodore Lazo, Senior Special Counsel, Division of Market Regulation, Commission, dated May 5, 2003.

[4] *See* Securities Exchange Act Release No. 46787 (November 7, 2002), 67 FR 69059 (November 14, 2002).

Customer Margin Requirements

515. General Requirements; Offsetting Positions; Exclusion for Market Makers

(a)–(n)(ii)(B) No Change.

(C) Hold itself out as being willing to buy and sell security futures for its own account on a regular or continuous basis.

A Market Maker satisfies condition (C) above if:

(1) Such Market Maker: (x) provides continuous two-sided quotations throughout the trading day for all delivery months of Contracts representing a meaningful proportion of the total trading volume on the Exchange, subject to relaxation during unusual market conditions as determined by the Exchange (such as a fast market in either a Contract or a security underlying such Contract) at which times such Market Maker must use its best efforts to quote continuously and competitively; and (y) when providing quotations, quotes with a maximum bid/ask spread of no more than the greater of $0.20 or 150% of the bid/ask spread in the primary market for the security underlying each Contract;

(2) Such Market Maker: (x) responds to at least 75% of the requests for quotation for all delivery months of Contracts representing a meaningful proportion of the total trading volume on the Exchange, subject to relaxation during unusual market conditions as determined by the Exchange (such as a fast market in either a Contract or a security underlying such Contract) at which times such Market Maker must use its best efforts to quote competitively; and (y) when responding to requests for quotation, quotes within five seconds with a maximum bid/ask spread of no more than the greater of $0.20 or 150% of the bid/ask spread in the primary market for the security underlying each Contract; or

(3) (w) Such Market Maker is assigned to a group of Contracts that is either unlimited in nature (''Unlimited Assignment'') or is assigned to no more than 20% of the Contracts listed on the Exchange (''Limited Assignment''); (x) at least 75% of such Market Maker's total trading activity in Exchange products is in its assigned Contracts, measured on a quarterly basis; (y) during at least 50% of the trading day such Market Maker has bids or offers in the market that are at or near the best market, except in unusual market conditions as determined by the Exchange (such as a fast market in either a Contract or a security underlying such Contract), with respect to at least 25% (in the case of an Unlimited Assignment) or at least one (in the case of a Limited Assignment) of its assigned Contracts; and (z) the requirements set forth in clauses (x) and (y) are satisfied on at least 90% (in the case of an Unlimited Assignment) or 80% (in the case of a Limited Assignment) of the trading days in each calendar quarter.

For purposes of clauses (1) and (2) above, beginning on the 181st calendar day after the commencement of trading on the Exchange, a ''meaningful proportion of the total trading volume on the Exchange'' shall mean a minimum of 20% of such trading volume.

(n)(iii) No Change.

Schedule A—No Change.

* * * * *

II. Self-Regulatory Organization's Statement of the Purpose of, and Statutory Basis for, the Proposed Rule Change

In its filing with the Commission, OneChicago included statements concerning the purpose of, and basis for, the proposed rule change and discussed any comments it received on the proposed rule change. The text of these statements may be examined at the places specified in Item III below. OneChicago has prepared summaries, set forth in sections A, B, and C below, of the most significant aspects of such statements.

A. Self-Regulatory Organization's Statement of the Purpose of, and Statutory Basis for, the Proposed Rule Change

1. Purpose

OneChicago proposes to adopt, on a permanent basis, the Margin Rule, which sets forth the standards under which a OneChicago member may be excluded from the Exchange's margin requirements as a ''market maker.'' OneChicago believes that the Margin Rule, consistent with Rule 400(c)(2)(v) under the Act [5] and the CFTC Rule 41.42(c)(2)(v),[6] establishes standards by which members may qualify as Security Futures Dealers and therefore be excluded from OneChicago's margin rules.

The Commission did not receive any comments on the Margin Rule during the pilot period. Since OneChicago believes that the Margin Rule has been performing as anticipated during the pilot period and OneChicago proposes no changes to the Margin Rule, OneChicago now proposes to adopt the Margin Rule on a permanent basis.

2. Statutory Basis

OneChicago believes that the proposed rule change is consistent with section 6(b)(5) of the Act,[7] in that the proposal promotes competition, and is designed to prevent fraudulent and manipulative acts and practices, to promote just and equitable principles of trade, and to protect investors and the public interest. OneChicago believes that the proposed rule change is designed to accomplish these goals by permitting members to qualify as Security Futures Dealers, as permitted under the Commission's Rule.[8]

B. Self-Regulatory Organization's Statement on Burden on Competition

OneChicago does not believe that the proposed rule change will have an impact on competition.

C. Self-Regulatory Organization's Statement on Comments on the Proposed Rule Change Received From Members, Participants, or Others

Comments on the proposed rule change have not been solicited and none have been received.

III. Solicitation of Comments

Interested persons are invited to submit written data, views and arguments concerning the foregoing, including whether the proposed rule change, as amended, is consistent with the Act. Persons making written submissions should file six copies thereof with the Secretary, Securities and Exchange Commission, 450 Fifth Street, NW., Washington, DC 20549–0609. Copies of the submission, all subsequent amendments, all written statements with respect to the proposed rule change that are filed with the Commission, and all written communications relating to the proposed rule change between the Commission and any person, other than those that may be withheld from the public in accordance with the provisions of 5 U.S.C. 552, will be available for inspection and copying in the Commission's Public Reference Room. Copies of such filing will also be available for inspection and copying at the principal office of OneChicago. All submissions should refer to File No. SR–OC–2003–05 and should be submitted by June 5, 2003.

IV. Commission Findings and Order Granting Accelerated Approval of a Proposed Rule Change

The Commission finds that the proposed rule change, as amended, is

[5] 17 CFR 242.400(c)(2)(v).

[6] 17 CFR 41.42(c)(2)(v).

[7] 15 U.S.C. 78f(b)(5).

[8] *See* 17 CFR 240.400(c)(2)(v).

consistent with the requirements of the Act and the rules and regulations thereunder applicable to a national securities exchange.[9] In particular, the Commission believes that the proposed rule change is consistent with the requirements of section 6(b)(5) of the Act,[10] which requires, among other things, that the rules of the Exchange be designed to promote just and equitable principles of trade and, in general, to protect investors and the public interest.[11] In addition, the Commission believes that the proposed rule change is consistent with section 7(c)(2)(B) of the Act,[12] which provides, among other things, that the margin requirements for security futures must preserve the financial integrity of markets trading security futures, prevent systemic risk, be consistent with the margin requirements for comparable exchange-traded options, and provide that the margin levels for security futures may be no lower than the lowest level of margin, exclusive of premium, required for any comparable exchange-traded option.

The Commission believes that OneChicago's standards for market makers under Rule 515(n)(ii)(C) are consistent with the Act, and Rule 400(c)(2)(v) thereunder.[13] Specifically, Rule 400(c)(2)(v) provides that the Commission's joint margin rules do not apply to a member of a national securities exchange that is registered with such exchange as a ''Security Futures Dealer'' pursuant to exchange rules that must meet several criteria, including a requirement that a Security Futures Dealer be required to ''to hold itself out as being willing to buy and sell security futures for its own account on a regular and continuous basis.'' The Commission believes that the affirmative obligations required by OneChicago pursuant to Rule 515(n)(ii)(C) satisfy this requirement.

OneChicago has requested that the Commission approve the proposed rule change, as amended, prior to the thirtieth day after publication of notice of the filing in the **Federal Register**. The Commission finds good cause for approving the proposed rule change prior to the thirtieth day after the date of publication of notice of filing thereof in the **Federal Register**. The Commission believes that accelerated approval of the proposed rule change should enable OneChicago members that trade security futures as market makers to continue to do so on an uninterrupted basis. The Commission notes that it approved the Margin Rule as a temporary pilot to give members of the public an opportunity to comment on the substance of the Margin Rule. The Commission received no comments on the Pilot. Accordingly, the Commission finds good cause, consistent with section 19(b)(2) of the Act,[14] to approve the proposed rule change, as amended, prior to the thirtieth day after publication of the notice of filing.

V. Conclusion

It is therefore ordered, pursuant to section 19(b)(2) of the Act [15], that the proposed rule change (File No. SR–OC–2003–05), as amended, be approved on a permanent basis.

For the Commission, by the Division of Market Regulation, pursuant to delegated authority.[16]

Margaret H. McFarland,

Deputy Secretary.

[FR Doc. 03–12149 Filed 5–14–03; 8:45 am]

BILLING CODE 8010–01–P

[9] 15 U.S.C. 78s(b)(2).

[10] 15 U.S.C. 78f(b)(5).

[11] In approving the proposed rule, the Commission has considered the proposed rule's impact on efficiency, competition, and capital formation. 15 U.S.C. 78c(f).

[12] 15 U.S.C. 78g(c)(2)(B).

[13] 17 CFR 240.400(c)(2)(v)(B)(3).

[14] 15 U.S.C. 78s(b)(2).

[15] 15 U.S.C. 78s(b)(2).

[16] 17 CFR 200.30–3(a)(12).

DEPARTMENT OF STATE

Office of the Secretary

[Public Notice 4366]

Amendment of the Restriction on the Use of United States Passports for Travel To, In or Through Iraq

By means of Public Notice 4337 of April 16, 2003 (68 FR 18722), certain amendments were made to the restriction set forth in Public Notice 4283 of February 25, 2003 (68 FR 8791) on the use of U.S. passports for travel to, in, or through Iraq.

The security situation in Iraq remains unstable and consular services are not currently available to U.S. citizens there. Nevertheless, it is in the U.S. national interest to continue to facilitate the humanitarian and reconstructive activities taking place in Iraq. Therefore, pursuant to the authorities set forth in 22 U.S.C. 211a, Executive Order 11295, and 22 CFR 51.73, I have decided to broaden further the exemptions from the restriction on the use of U.S. passports for travel to, in, or through Iraq.

Accordingly, Public Notice 4337 of April 16, 2003, which amended Public Notice 4283, of February 25, 2003, is hereby amended by deleting the penultimate paragraph (beginning with ''Accordingly'') and replacing it with the following:

''Accordingly, United States passports shall continue to be invalid for travel to, in, or through Iraq unless specifically validated for such travel under the authority of the Secretary of State. This restriction on the validity of U.S. passports for travel to, in or through Iraq shall not apply to U.S. passports held by (1) persons resident in Iraq since February 1, 1991; (2) professional reporters and journalists on assignment there; (3) persons conducting humanitarian activities, as defined in 31 CFR Section 575.330; (4) persons conducting activities within the scope of a U.S. Government contract or grant, including employees of subcontractors and other persons hired to conduct such activities; (5) personnel of the United Nations and its agencies; or (6) U.S. Government personnel on official U.S. Government assignment in Iraq, including Members of Congress and their staffs on official business there.''

This Public Notice amending Public Notice Number 4337 is effective May 9, 2003, and shall expire at midnight on February 25, 2004, unless sooner extended or revoked by public notice.

Dated: May 9, 2003.

Colin L. Powell,

Secretary of State, Department of State.

[FR Doc. 03–12296 Filed 5–14–03; 8:45 am]

BILLING CODE 4710–10–P

TENNESSEE VALLEY AUTHORITY

Environmental Impact Statement—Koppers Coal Reserve Management Plan

AGENCY: Tennessee Valley Authority (TVA).

ACTION: Notice of intent.

SUMMARY: This notice is provided in accordance with the Council on Environmental Quality's regulations (40 CFR parts 1500 to 1508), section 106 of the National Historic Preservation Act (NHPA) and its implementing regulations (36 CFR part 800), and TVA's procedures implementing the National Environmental Policy Act (NEPA). TVA will prepare an Environmental Impact Statement (EIS) to assess the impacts of various strategies for future management of TVA's mineral rights underlying 53,000 acres in Scott and Campbell Counties, Tennessee known as the Koppers Coal Reserve. TVA estimates approximately 5,000 acres of surface disturbance could occur from mining all of the identified

coal reserves. Maximum recoverable coal is estimated at approximately 70 million tons, including 28 million tons from surface mining and 42 million tons from deep mining, having an estimated value of about $140 million. TVA will select a management plan that will best guide the lease of Koppers coal over the next 50 years, with the goal of protecting both the environment and the value of TVA's assets for the benefit of its ratepayers.

Lead and Cooperating Agencies: The Tennessee Valley Authority is the lead agency in the development of this EIS. The United States Department of Interior (USDI) Office of Surface Mining (OSM), Knoxville, TN; the Tennessee Wildlife Resources Agency (TWRA); and the National Park Service, Big South Fork National River and Recreation Area (BSFNRRA) will participate as cooperating agencies.

DATES: Comments on the scope of issues and alternatives to be considered in the environmental review must be received on or before June 15, 2003.

ADDRESSES: Written comments should be sent to Ruth M. Horton, Sr. NEPA Specialist, Environmental Policy and Planning, Tennessee Valley Authority, 400 West Summit Hill Drive, WT 8C, Knoxville, Tennessee 37902–1499.

FOR FURTHER INFORMATION CONTACT: Ruth M. Horton, Sr. NEPA Specialist, Environmental Policy and Planning, Tennessee Valley Authority, 400 West Summit Hill Drive, WT 8C, Knoxville, Tennessee 37902–1499; telephone (865) 632–3719 or e-mail *rmhorton@tva.gov.*

SUPPLEMENTARY INFORMATION:

Background

The Koppers Coal Reserve is a 53,000 acre area in western Campbell County and eastern Scott County, straddling Interstate 75 immediately north of the towns of Caryville and Jacksboro in upper east Tennessee. TVA acquired the rights to the Koppers Coal Reserve in 1962 as part of an effort to ensure reliable fuel supplies. The area is typical of coal properties in eastern Tennessee and eastern Kentucky, with coal seams of various thickness and quality. There are 19 seams identified on the property which vary in sulfur content from less than 1 percent to over 5 percent, and range in thickness from 1 to more than 3 feet. Total recoverable coal is estimated at approximately 70 million tons, including 28 million tons from surface mining and 42 million tons from deep mining. This coal is presently valued at approximately $140 million. The property was heavily surface- and underground-mined in certain areas from the 1930s through the 1950s, producing a significant quantity of coal and providing substantial employment to miners and other satellite businesses.

Since 1962, production from the Koppers Coal Reserve has been limited. During the 1970s, three coal companies conducted mining operations to provide coal to TVA facilities. There were no requests for mining coal between 1979 and 1990, possibly as a result of the implementation of the more stringent mining and reclamation requirements in the Surface Mining Control and Reclamation Act of 1977 (SMCRA). Since 1990, 10 leases have been auctioned, with mining occurring on only seven of these leases. The newest lease, issued December 18, 2002, the Cross/Adkins mine, is still under development.

TVA issued a Draft EA (DEA) in December 2002 for a proposal to mine coal at Braden Mountain which is located in the northwest corner of the Koppers Reserve. However, TVA is ending consideration of the Braden Mountain mine lease as a separate action and will include the review of Braden Mountain coal mining activity in this EIS.

Since acquiring the Koppers Coal Reserve, TVA has considered requests from the coal industry for mine leases on a case by case basis. Site specific environmental reviews of lease requests have tiered from the Office of Surface Mining's (OSM's) permitting process and its 1985 FEIS on the Comprehensive Impacts of Permit Decisions Under Tennessee Federal Program. Cumulative impact assessments for these projects have focused on the Cumulative Hydrological Impacts Analyses (CHIAs) prepared for each permit application to the OSM.

In 1992, the Tennessee Wildlife Resources Agency (TWRA) bought the surface overlying most of the Koppers Coal Reserve and established the 50,000 acre Royal Blue Wildlife Management Area (WMA), with the understanding that the underlying minerals would be mined. A comprehensive management plan for the Royal Blue WMA has not yet been developed. In late 1995, TVA and TWRA reached an interim agreement to enhance communication and coordination on coal mining activities in the area. The Royal Blue WMA is adjacent to the newly created 74,000 acre Sundquist WMA. Additionally, the Smokey Mountain segment of the Cumberland Trail State Park crosses the southern portion of the Koppers Coal Reserve.

Proposed Action

TVA is undertaking the development of a plan for managing its coal reserves on the Koppers property in response to an anticipated increase in demand for this coal. The market for coal from the Koppers Coal Reserve has improved as a result of utility industry efforts to comply with the 1990 amendments to the Clean Air Act which put a cap on emissions of sulfur dioxide (SO_2) from electric utility boilers. These efforts by TVA and other electric utilities include constructing flue gas desulfurization units (scrubbers) at existing coal-fired generating plants. Due to their high SO_2 removal efficiency, the scrubbers will allow TVA and other utilities to burn higher sulfur coal from coalfields like Koppers while still meeting emissions limits and reducing the amount of SO_2 released. A management plan will help TVA manage the use of mineral resources at Koppers Coal Reserve to meet the future coal demand in a manner that protects both the environment and the value of TVA's coal assets for the benefit of its ratepayers. This EIS will assess the environmental impacts of alternative strategies for managing the Koppers Coal Reserve.

Range of Alternatives

As required by Council on Environmental Quality (CEQ) regulations (40 CFR 1502.14) TVA will evaluate a reasonable range of alternatives in this EIS. At this time, TVA anticipates the following four alternatives would be assessed in the EIS in addition to the no action alternative: managed surface and deep coal mining; deep mining only; no mining beyond current leases; and disposal of TVA's mineral rights at fair market value. The no action alternative would entail continued ad hoc consideration of requests for both surface and deep mine leases. The managed approach would explore different intensities and quantities of surface and deep coal mining. In the deep mining alternative, no surface mining would be considered. The no mining alternative would look at the possibility of discontinuing coal mining on the Koppers Coal Reserve beyond current leases. Under the disposal option, two scenarios are possible. TVA's mineral rights could be purchased by a coal company for the purpose of mining or by an entity that does not intend to mine. It is envisioned that the no action and the managed mining alternatives would include consideration of the potential impacts from the proposed lease of mineral rights at Braden Mountain. Other alternatives proposed by the public; local, state, and federal agencies; and

cooperating agencies during scoping will also be given due consideration.

Potential Environmental Impacts

TVA anticipates that the EIS will include discussion of the potential effects of the various alternatives on the following resources: terrestrial wildlife and vegetation; aquatic ecology, endangered and threatened species; geology; surface and groundwater; wetlands; recreation and natural areas; cultural resources; socioeconomic and environmental justice issues; land use; solid waste disposal; visual resources; and transportation. Other issues that may also be discussed, depending on the potential impact of the alternatives, include noise, air quality, floodplains, and soils.

Public Participation

TVA is interested in receiving comments on issues and alternatives to be addressed in the EIS. Written comments on the scope of the environmental review should be received on or before June 15, 2003. TVA will prepare an EIS on a range of alternatives for the proposed Koppers Coal Reserve Management Plan after considering public comments received from this scoping process. TVA anticipates completing the Draft EIS by October 2004. An opportunity to review and comment on the Draft EIS will be provided at that time. Concurrent with the NEPA review, TVA also seeks comments from the public on the scope of this federal undertaking on historic properties as provided under section 106 of NHPA.

TVA plans to hold a public meeting to provide more information and to receive comments on the proposal on June 3, 2003, at Cove Lake State Park, 4 p.m.–8 p.m. eastern standard time. The time, location, and place will be announced in local newspapers, on the TVA Web page at *http://www.tva.gov/environment/calendar.htm,* and may be obtained by contacting the persons listed above.

Dated: May 7, 2003.

Kathryn J. Jackson,

Executive Vice President, River System Operations & Environment.

[FR Doc. 03–12129 Filed 5–14–03; 8:45 am]

BILLING CODE 8120–08–P

DEPARTMENT OF TRANSPORTATION

Office of the Secretary

Application of USA Jet Airlines, Inc. for Passenger Certificate Authority

AGENCY: Department of Transportation.

ACTION: Notice of order to show cause (Order 2003–5–10), Dockets OST–02–12987 and OST–02–12989.

SUMMARY: The Department of Transportation is directing all interested persons to show cause why it should not issue an order finding USA Jet Airlines, Inc., fit, willing, and able, and awarding it certificates of public convenience and necessity authorizing it to engage in interstate and foreign charter air transportation of persons, property and mail.

DATES: Persons wishing to file objections should do so no later than May 27, 2003.

ADDRESSES: Objections and answers to objections should be filed in Dockets OST–02–12987 and OST–02–12989 and addressed to the Department of Transportation Dockets (SVC–124.1, Room PL–401), U.S. Department of Transportation, 400 Seventh Street, SW., Washington, DC 20590, and should be served upon the parties listed in Attachment A to the order.

FOR FURTHER INFORMATION CONTACT: Mr. Howard Serig, Air Carrier Fitness Division (X–56, Room 6401), U.S. Department of Transportation, 400 Seventh Street, SW., Washington, DC 20590, (202) 366–4822.

Dated: May 9, 2003.

Read C. Van De Water,

Assistant Secretary for Aviation and International Affairs.

[FR Doc. 03–12171 Filed 5–14–03; 8:45 am]

BILLING CODE 4910–62–P

DEPARTMENT OF TRANSPORTATION

Federal Aviation Administration

Notice of Availability of the Record of Decision on the Potomac Consolidated Terminal Radar Approach Control (TRACON) Airspace Redesign

AGENCY: Federal Aviation Administration, DOT.

ACTION: Notice of Availability of the record of Decision for the Potomac Consolidated TRACON Airspace Redesign.

SUMMARY: In accordance with the National Environmental Policy Act of 1969 and FAA Order 1050.1D, Policies and Procedures for Considering Environmental Impacts, the Federal Aviation Administration (FAA) has made a final determination to modify aircraft routes, altitudes and air traffic control procedures used in a 23,000 square mile area around Washington, DC. These procedures relate to aircraft arriving and departing from Andrews Air force Base (ADW), Baltimore-Washington International Airport (BWI), Dulles International Airport (IAD), Reagan Washington National Airport (DCA) and other smaller area airports. The FAA's determinations on the airspace redesign are contained in the Record of Decision (ROD) dated May 1, 2003.

FOR FURTHER INFORMATION CONTACT: Mr. William Carver, Support Manager, Potomac TRACON, (540) 349–7520, E-mail: *william.carver@faa.gov.*

SUPPLEMENTARY INFORMATION: As discussed in the ROD, the revised aircraft routes, altitudes and procedures will be established in a manner consistent with the alternative ''Existing Peripheral Airspace Ingress/Egress Transfer Points with New Internal Airspace Design,'' Alternative 2, identified as the preferred alternative in the Final Environmental Impact Statement (FEIS), Potomac Consolidated TRACON (PCT) Airspace Redesign, prepared by the FAA and dated December 2002. The FAA issued the FEIS on January 10, 2003.

The ROD is available for review on the Internet at *http://www.faa.gov/ats/potomac.*

Dated: May 8, 2003.

Barbara Jo Cogliandro,

Air Traffic Manager, Potomac TRACON.

[FR Doc. 03–12044 Filed 5–14–03; 8:45 am]

BILLING CODE 4910–13–M

DEPARTMENT OF TRANSPORTATION

Federal Aviation Administration

[Summary Notice No. PE–2003–28]

Petitions for Exemption; Summary of Petitions Received

AGENCY: Federal Aviation Administration (FAA), DOT.

ACTION: Notice of petitions for exemption received.

SUMMARY: Pursuant to FAA's rulemaking provisions governing the application, processing, and disposition of petitions for exemption part 11 of Title 14, Code of Federal Regulations (14 CFR), this notice contains a summary of certain petitions seeking relief from specified requirements of 14 CFR, dispositions of certain petitions previously received, and corrections. The purpose of this notice is to improve the public's awareness of, and participation in, this aspect of FAA's regulatory activities. Neither publication of this notice nor the inclusion or omission of information in the summary is intended to affect the legal status of any petition or its final

disposition. Because the FAA is intending to make a decision on the allocation of these exemption slots in the near future, the FAA is providing an abbreviated comment period of 10 days.

DATES: Comments on petitions received must identify the petition docket number involved and must be received on or before May 27, 2003.

ADDRESSES: Send comments on any petition to the Docket Management System, U.S. Department of Transportation, Room Plaza 401, 400 Seventh Street, SW., Washington, DC 20590–0001. You must identify the docket number FAA–2000–XXXX at the beginning of your comments. If you wish to receive confirmation that FAA received your comments, include a self-addressed, stamped postcard.

You may also submit comments through the Internet to *http://dms.dot.gov.* You may review the public docket containing the petition, any comments received, and any final disposition in person in the Dockets Office between 9 a.m. and 5 p.m., Monday through Friday, except Federal holidays. The Dockets Office (telephone 1–800–647–5527) is on the plaza level of the NASSIF Building at the Department of Transportation at the above address. Also, you may review public dockets on the Internet at *http://dms.dot.gov.*

FOR FURTHER INFORMATION CONTACT: Tim Adams (202) 267–8033, Dennis Emrick (202) 267–75174, or Sandy Buchanan-Sumter (202) 267–7271, Office of Rulemaking (ARM–1), Federal Aviation Administration, 800 Independence Avenue, SW., Washington, DC 20591.

This notice is published pursuant to 14 CFR 11.85 and 11.91.

Issued in Washington, DC, on May 9, 2003.

Donald P. Byrne,

Assistant Chief Counsel for Regulations.

Petitions for Exemption

Docket No.: FAA–2003–14827.

Petitioner: Comair, Inc.

Section of 14 CFR Affected: 14 CFR 93.123.

Description of Relief Sought: To permit Comair to operate certain slots at Ronald Reagan National Airport, authorized by exemption only, to provide nonstop service to Savannah, Georgia, and Lexington, Kentucky.

Docket No.: FAA–2003–14975.

Petitioner: Spirit Airlines, Inc.

Section of 14 CFR Affected: 14 CFR 93.123.

Description of Relief Sought: To permit Spirit Airlines, Inc. to operate certain slots at Ronald Reagan National Airport, authorized by exemption only, to provide nonstop service to Detroit, Michigan, or Ft. Lauderdale, Florida.

[FR Doc. 03–12045 Filed 5–14–03; 8:45 am]

BILLING CODE 4910–13–P

DEPARTMENT OF TRANSPORTATION

Federal Motor Carrier Safety Administration

[FMCSA Docket No. FMCSA–2003–14911]

Exemptions From Certain Controlled Substances and Alcohol Testing Regulations; Mayflower Transit LLC dba Aero Mayflower Transit and United Van Lines LLC Requesting Exemptions

AGENCY: Federal Motor Carrier Safety Administration (FMCSA), DOT.

ACTION: Notice of application for exemption; request for comments.

SUMMARY: This notice announces the FMCSA's receipt of an application from Mayflower Transit LLC and United Van Lines LLC for exemptions from certain Federal controlled substance and alcohol testing requirements. The applicants request exemptions that would allow them to impose controlled substance and alcohol testing on their non-CDL (commercial driver's license) drivers using the same standards, forms and requirements, and in the same random testing pool, as their CDL drivers.

DATES: Comments must be received on or before June 16, 2003.

ADDRESSES: Mail or hand deliver comments to the U.S. Department of Transportation, Dockets Management Facility, Room PL–401, 400 Seventh Street, SW., Washington, DC 20590, or submit electronically at *http://dmses.dot.gov/submit.* All comments received will be available for examination and copying at the above address from 9 a.m. to 5 p.m. e.t., Monday through Friday, except Federal holidays. Those desiring notification of receipt of comments must include a self-addressed, stamped postcard, or you may print the acknowledgment page that appears after submitting comments electronically.

FOR FURTHER INFORMATION CONTACT: For information about the exemption application in this notice, Ms. Kaye Kirby, Office of Bus and Truck Standards and Operations, (202) 366–3109; for information about legal issues related to this notice, Mr. Mike Falk, Office of the Chief Counsel, (202) 366–1384, FMCSA, Department of Transportation, 400 Seventh Street, SW., Washington, DC 20590. Office hours are from 7:45 a.m. to 4:15 p.m., e.t., Monday through Friday, except Federal holidays.

SUPPLEMENTARY INFORMATION:

Background

Section 4007 of the Transportation Equity Act for the 21st Century (TEA–21) (Pub. L. 105–178, 112 Stat. 107, now codified at 49 U.S.C 31315 and 31136), requires FMCSA to publish a notice in the **Federal Register** for each exemption requested, explain that the request has been filed, provide the public with an opportunity to inspect the safety analysis and any other relevant information known to the agency, and provide an opportunity to comment on the request. Prior to granting a request for an exemption, the agency must publish a notice in the **Federal Register** identifying the person or class of persons who will receive the exemption, the provisions from which the person will be exempt, the effective period, and all terms and conditions of the exemption. The terms and conditions established by FMCSA must ensure that the exemption will likely achieve a level of safety that is equivalent to, or greater than, the level that would be achieved by complying with the regulation.

On December 8, 1998, FMCSA published an interim final rule implementing section 4007 of TEA–21 (63 FR 67600). The regulations at 49 CFR part 381 establish the procedures to be followed to request waivers and to apply for exemptions from the Federal Motor Carrier Safety Regulations, and the provisions used to process them.

Exemption Request

Mayflower and United Van Lines have requested exemptions that would allow them to impose controlled substance and alcohol testing on their non-CDL drivers using the same standards, forms and requirements, and in the same random testing pool as their CDL drivers.

Mayflower and United Van Lines note that for purposes of administrative efficiency and to promote safety in their operations, Mayflower and United Van Lines have included all of the commercial motor vehicle drivers, including the non-CDL drivers, in the company controlled substance and alcohol testing programs conducted under the Department of Transportation regulations. This request for exemptions was prompted by the results of a compliance review conducted by the Federal Motor Carrier Safety Administration during which Mayflower was cited for including non-CDL drivers in its controlled substances and alcohol testing program. Consequently, Mayflower and United

Van Lines are requesting exemptions from certain controlled substance and alcohol testing requirements specifically, 49 CFR 382.105, 49 CFR 382.305(I)(1), and 49 CFR 40.13(a), (b), (c) and (d).

Mayflower and United Van Lines propose two conditions for their exemption that they believe would allow the FMCSA to monitor whether they have met the required annual random testing percentage. First, they intend to mark each driver controlled substance and alcohol testing record with either ''CDL driver'' or ''non-CDL driver'' so that an enforcement officer can readily determine which records are for drivers subject to 49 CFR part 383 Commercial Driver's License Standards; Requirements and Penalties. Secondly, they will establish a random testing program that will test all drivers (both CDL drivers and non-CDL drivers) for controlled substances and alcohol at an annual rate of at least 15 percent for alcohol and at least 55 percent for controlled substances. The applicants believe by implementing these two conditions they will meet the minimum annual random testing percentage while still having a single pool of drivers for random selection.

Request for Comments

In accordance with 49 U.S.C. 31315(b)(4) and 31136(e), FMCSA is requesting public comment from all interested persons on these exemption applications. All comments received before the close of business on the comment closing date, indicated at the beginning of this notice, will be considered and will be available for examination in the docket at the location listed under the address section of this notice. Comments received after the comment closing date will be filed in the public docket and will be considered to the extent practicable, but FMCSA may make its decision at any time after the close of the comment period. In addition to late comments, FMCSA will also continue to file, in the public docket, relevant information that becomes available after the comment closing date. Interested persons should continue to examine the public docket for new material.

Authority: 49 U.S.C. 31136 and 31315; and 49 CFR 1.73.

Issued on: May 9, 2003.

Pamela M. Pelcovits,

Acting Associate Administrator for Policy and Program Development.

[FR Doc. 03–12173 Filed 5–14–03; 8:45 am]

BILLING CODE 4910–EX–P

DEPARTMENT OF TRANSPORTATION

National Highway Traffic Safety Administration

Reports, Forms and Record Keeping Requirements; Agency Information Collection Activity Under OMB Review

AGENCY: National Highway Traffic Safety Administration (NHTSA), DOT.

ACTION: Emergency **Federal Register** Notice.

SUMMARY: In compliance with the Paperwork Reduction Act of 1995 (44 U.S.C. 3501 *et seq.*), this notice announces that the Information Collection Request (ICR) abstracted below has been forwarded to the Office of Management and Budget (OMB) for review and comment. The ICR describes the nature of the information collections and their expected burden. The **Federal Register** Notice with a 60-day comment period was published on November 5, 2001 [66 FR 55979].

DATES: OMB approval has been requested by May 30, 2003.

FOR FURTHER INFORMATION CONTACT: Gayle Dalrymple at the National Highway Traffic Safety Administration (NHTSA), Office of Crash Avoidance Standards, 202–366–5559. 400 Seventh Street, SW., Washington, DC 20590.

SUPPLEMENTARY INFORMATION:

National Highway Traffic Safety Administration

Title: Exemption from the Make Inoperative Prohibition.

OMB Number: New.

Type of Request: New collection.

Abstract: On Febraury 27, 2001, NHTSA published a final rule (66 FR 12638) to facilitate the modification of motor vehicle so that persons with disabilities can use the vehicle. The regulation is found at 49 CFR Part 595 Subpart C—Vehicle Modifications to Accommodate People with Disabilities. This final rule included two new ''collection of information,'' as that term is defined in 5 CFR Part 1320 Controlling Paperwork Burdens on the Public: Modifier identification and a document to be provided to the owner of the modified vehicle stating the exemptions used for that vehicle and any reduction in load carrying capacity of the vehicle of more than 100 kg (220 lbs).

Affected Public: Businesses that modify vehicles, after the first retail sale, so that the vehicle may be used by persons with disabilities.

Estimated Total Annual Burden: 655 hours and $7.48.

ADDRESSES: Send comments, within 30 days, to the Office of Information and Regulatory Affairs, Office of Management and Budget, 725 17th Street, NW., Washington, DC 20503, Attention: NHTSA Desk Officer.

Comments Are Invited On:

- Whether the proposed collection of information is necessary for the proper performance of the functions of the Department, including whether the information will have practical utility.
- Whether the Department's estimate for the burden of the proposed information collection is accurate.
- Ways to minimize the burden of the collection of information on respondents, including the use of automated collection techniques or other forms of information technology.

A comment to OMB is most effective if OMB receives it prior to May 30, 2003.

Issued on: May 9, 2003.

Stephen R. Kratzke,

Associate Administrator for Rulemaking.

[FR Doc. 03–12168 Filed 5–14–03; 8:45 am]

BILLING CODE 4910–59–P

DEPARTMENT OF TRANSPORTATION

National Highway Traffic Safety Administration

Reports, Forms and Record Keeping Requirements; Agency Information Collection Activity Under OMB Review

AGENCY: National Highway Traffic Safety Administration, DOT.

ACTION: Notice.

SUMMARY: In compliance with the Paperwork Reduction Act of 1995 (44 U.S.C. 3501 *et seq.*), this notice announces that the Information Collection Request (ICR) abstracted below has been forwarded to the Office of Management and Budget (OMB) for review and comment. The ICR describes the nature of the information collections and their expected burden. The **Federal Register** Notice with a 60-day comment period was published on February 3, 2003 [Volume 68, No. 22, Page 5331].

DATES: Comments must be submitted on or before June 16, 2003.

FOR FURTHER INFORMATION CONTACT: Gary Toth, NHTSA, 400 Seventh Street, SW., Room 6213, NPO.122, Washington, DC 20590. The telephone number for Mr. Toth is (202) 366–5378.

SUPPLEMENTARY INFORMATION:

National Highway Traffic Safety Administration

Title: National Automotive Sampling System (NASS).

OMB Number: 2127–0021.

Type of Request: Continuation.

Abstract: The collection of crash data that support the establishment and enforcement of motor vehicle regulations that reduce the severity of injury and property damage caused by motor vehicle crashes is authorized under the National Traffic and Motor Vehicle Safety Act of 1966 (Pub. L. 89–563, Title 1, Sec. 106, 108, and 112). The National Automotive Sampling System (NASS) Crashworthiness Data System (CDS) of the National Highway Traffic Safety Administration investigates high severity crashes. Once a crash has been selected for investigation, researchers locate, visit, measure, and photograph the crash scene; locate, inspect, and photograph vehicles; conduct a telephone or personal interview with the involved individuals or surrogate; and obtain and record injury information received from various medical data sources. NASS CDS data are used to describe and analyze circumstances, mechanisms, and consequences of high severity motor vehicle crashes in the United States. The collection of interview data aids in this effort.

Affected Public: Passenger Motor Vehicle Operators.

Estimated Total Annual Burden: 5,807 hours.

ADDRESSES: Send comments, within 30 days, to the Office of Information and Regulatory Affairs, Office of Management and Budget, 725–17th Street, NW., Washington, DC 20503, Attention NHTSA Desk Officer.

Comments are invited on: Whether the proposed collection of information is necessary for the proper performance of the functions of the Department, including whether the information will have practical utility; the accuracy of the Departments estimate of the burden of the proposed information collection; ways to enhance the quality, utility and clarity of the information to be collected; and ways to minimize the burden of the collection of information on respondents, including the use of automated collection techniques or other forms of information technology.

A Comment to OMB is most effective if OMB receives it within 30 days of publication.

Issued in Washington, DC, on May 9, 2003.

Raymond P. Owings,

Associate Administrator for Advanced Research and Analysis.

[FR Doc. 03–12169 Filed 5–14–03; 8:45 am]

BILLING CODE 4910–59–P

DEPARTMENT OF TRANSPORTATION

National Highway Traffic Safety Administration

Reports, Forms and Record Keeping Requirements; Agency Information Collection Activity Under OMB Review

AGENCY: National Highway Traffic Safety Administration, DOT.

ACTION: Notice.

SUMMARY: In compliance with the Paperwork Reduction Act of 1995 (44 U.S.C. 3501 *et seq.*), this notice announces that the Information Collection Request (ICR) abstracted below has been forwarded to the Office of Management and Budget (OMB) for review and comment. The ICR describes the nature of the information collections and their expected burden. The **Federal Register** Notice with a 60-day comment period was published on December 9, 2002 67 FR 73005–73006.

DATES: Comments must be submitted on or before June 16, 2003.

FOR FURTHER INFORMATION CONTACT: Mr. Glenn Karr at the National Highway Traffic Safety Administration, National Center for Statistics and Analysis (NPO–124), 202/366–4800, 400 Seventh Street, SW, Room 6124A, Washington, DC 20590.

SUPPLEMENTARY INFORMATION:

National Highway Traffic Safety Administration

Title: National Driver Register.

OMB Number: 2127–0001.

Type of Request: Extension of a currently approved collection.

Abstract: The purpose of the NDR is to assist States and other authorized users in obtaining information about problem drivers. State motor vehicle agencies submit and use the information for driver licensing purposes. Other users obtain the information for transportation safety purposes.

Affected Public: State, Local, or Tribal Government.

Estimated Total Annual Burden: 1,979.

ADDRESSES: Send comments, within 30 days, to the Office of Information and Regulatory Affairs, Office of Management and Budget, 725 17th Street, NW, Washington, DC 20503, Attention NHTSA Desk Officer.

Comments are invited on: Whether the proposed collection of information is necessary for the proper performance of the functions of the Department, including whether the information will have practical utility; the accuracy of the Department's estimate of the burden of the proposed information collection; ways to enhance the quality, utility and clarity of the information to be collected; and ways to minimize the burden of the collection of information on respondents, including the use of automated collection techniques or other forms of information technology.

A Comment to OMB is most effective if OMB receives it within 30 days of publication.

Issued in Washington, DC, on May 9, 2003.

Raymond P. Owings,

Associate Administrator for Advanced Research and Analysis.

[FR Doc. 03–12170 Filed 5–14–03; 8:45 am]

BILLING CODE 4910–59–P

DEPARTMENT OF TRANSPORTATION

Surface Transportation Board

[STB Finance Docket No. 34320 (Sub–No. 1)]

Union Pacific Railroad Company—Trackage Rights Exemption—The Burlington Northern and Santa Fe Railway Company

AGENCY: Surface Transportation Board, DOT.

ACTION: Petition for partial revocation.

SUMMARY: The Board, under 49 U.S.C. 10502, exempts the trackage rights described in STB Finance Docket No. 34320 [1] to permit the trackage rights to expire on or about May 22, 2003, in accordance with the agreement of the parties.

DATES: This exemption will be effective on May 22, 2003. Petitions to reopen must be filed by June 4, 2003.

ADDRESSES: An original and 10 copies of all pleadings referring to STB Finance Docket No. 34320 (Sub-No. 1) must be filed with the Surface Transportation Board, 1925 K Street, NW., Washington, DC 20423–0001. In addition, a copy of all pleadings must be served on petitioners' representative: Robert T. Opal, 1416 Dodge Street, Room 830, Omaha, NE 68179.

FOR FURTHER INFORMATION CONTACT: Joseph H. Dettmar (202) 565–1600

[1] On March 7, 2003, Union Pacific Railroad Company (UP) filed a notice of exemption under the Board's class exemption procedures at 49 CFR 1180.2(d)(7). The notice covered the agreement by The Burlington Northern and Santa Fe Railway Company (BNSF) to grant temporary overhead trackage rights to UP over a BNSF line of railroad between BNSF milepost 203.0 near Keddie, CA, and BNSF milepost 0.0 near Klamath Falls, OR, a distance of approximately 203.0 miles. *See Union Pacific Railroad Company—Trackage Rights Exemption—The Burlington Northern and Santa Fe Railway Company,* STB Finance Docket No. 34320 (STB served Mar. 26, 2003). The trackage rights operations under the exemption were scheduled to begin on March 16, 2003.

(Federal Information Relay Service (FIRS) for the hearing impaired: 1–800–877–8339).

SUPPLEMENTARY INFORMATION: Additional information is contained in the Board's decision. To purchase a copy of the full decision, write to, call, or pick up in person from: Da 2 Da Legal Copy Service, Suite 405, 1925 K Street, NW., Washington, DC 20006. Telephone: (202) 293–7776. (Assistance for the hearing impaired is available through FIRS at 1–800–877–8339.)

Board decisions and notices are available on our Web site at *www.stb.dot.gov.*

Decided: May 9, 2003.

By the Board, Chairman Nober and Commissioner Morgan.

Vernon A. Williams,

Secretary.

[FR Doc. 03–12137 Filed 5–14–03; 8:45 am]

BILLING CODE 4915–00–P

DEPARTMENT OF TRANSPORTATION

Surface Transportation Board

[STB Finance Docket No. 34321 (Sub–No. 1)]

Union Pacific Railroad Company—Trackage Rights Exemption—The Burlington Northern and Santa Fe Railway Company

AGENCY: Surface Transportation Board.

ACTION: Petition for partial revocation.

SUMMARY: The Board, under 49 U.S.C. 10502, exempts the trackage rights described in STB Finance Docket No. 34321 [1] to permit the trackage rights to expire on or about May 12, 2003, in accordance with the agreement of the parties.

DATES: This exemption will be effective on May 12, 2003. Petitions to reopen must be filed by June 4, 2003.

ADDRESSES: An original and 10 copies of all pleadings referring to STB Finance Docket No. 34321 (Sub-No. 1) must be filed with the Surface Transportation Board, 1925 K Street, NW., Washington, DC 20423–0001. In addition, a copy of all pleadings must be served on petitioner's representative: Robert T. Opal, 1416 Dodge Street, Room 830, Omaha, NE 68179.

FOR FURTHER INFORMATION CONTACT: Joseph H. Dettmar, (202) 565–1600 (Federal Information Relay Service (FIRS) for the hearing impaired: 1–800–877–8339).

SUPPLEMENTARY INFORMATION: Additional information is contained in the Board's decision. To purchase a copy of the full decision, write to, call, or pick up in person from: Dã 2 Dã Legal Copy Service, Suite 405, 1925 K Street, NW., Washington, DC 20006. Telephone: (202) 293–7776. (Assistance for the hearing impaired is available through FIRS at 1–800–877–8339.)

Board decisions and notices are available on our Web site at *www.stb.dot.gov.*

Decided: May 9, 2003.

By the Board, Chairman Nober and Commissioner Morgan.

Vernon A. Williams,

Secretary.

[FR Doc. 03–12138 Filed 5–14–03; 8:45 am]

BILLING CODE 4915–00–P

[1] On March 7, 2003, the Union Pacific Railroad Company (UP) filed a notice of exemption under the Board's class exemption procedures at 49 CFR 1180.2(d)(7). The notice covered the agreement by The Burlington Northern and Santa Fe Railway Company (BNSF) to grant temporary overhead trackage rights to UP over BNSF's rail lines between BNSF milepost 143.2 near Los Angeles, CA, and BNSF milepost 10.5 near Riverside, CA, a distance of approximately 57.2 miles. *See Union Pacific Railroad Company—Trackage Rights Exemption—The Burlington Northern and Santa Fe Railway Company,* STB Finance Docket No. 34321 (STB served Mar. 26, 2003). The trackage rights operations under the exemption were scheduled to begin on March 14, 2003.

DEPARTMENT OF TRANSPORTATION

Surface Transportation Board

[STB Finance Docket No. 34333 (Sub—No. 1)]

Union Pacific Railroad Company—Trackage Rights Exemption—The Burlington Northern and Santa Fe Railway Company

AGENCY: Surface Transportation, Board DOT.

ACTION: Petition for partial revocation.

SUMMARY: The Board, under 49 U.S.C. 10502, exempts the temporary trackage rights arrangement between Union Pacific Railroad Company (UP) and the Burlington Northern and Santa Fe Railway Company (BNSF) described in STB Finance Docket No. 34333,[1] to permit it to expire on or about May 10, 2003.

DATES: This exemption is effective on May 9, 2003. Petitions to reopen must be filed by June 4, 2003.

ADDRESSES: An original and 10 copies of all pleadings referring to STB Finance Docket No. 34333 (Sub-No. 1) must be filed with the Surface Transportation Board, 1925 K Street, NW., Washington DC 20423–0001. In addition, a copy of all pleadings must be served on petitioner's representative: T. Christopher Lewis, 1416 Dodge Street, Room 830, Omaha, NE 68179.

FOR FURTHER INFORMATION CONTACT: Beryl Gordon, (202) 565–1600. (Assistance for the hearing impaired is available through the Federal Information Relay Service (FIRS) at 1–800–877–8339.)

SUPPLEMENTARY INFORMATION: Additional information is contained in the Board's decision. Copies of the decision may be purchased from Da 2 Da Legal Copy Service by calling (202) 293–7776 (assistance for the hearing impaired is available through FIRS at 1–800–877–8339) or by visiting Suite 405, 1925 K Street, NW., Washington DC 20006.

Board decisions and notices are available on our Web site at *www.stb.dot.gov.*

Decided: May 9, 2003.

By the Board, Chairman Nober and Commissioner Morgan.

Vernon A. Williams,

Secretary.

[FR Doc. 03–12139 Filed 5–14–03; 8:45 am]

BILLING CODE 4915–00–P

[1] The temporary trackage rights exempted in *Union Pacific Railroad Company—Trackage Rights Exemption—The Burlington Northern and Santa Fe Railway Company,* STB Finance Docket No. 34333 (STB served May 2, 2003), are over BNSF's rail line from BNSF milepost 141.7 near Rockview, MO, to BNSF milepost 422.2 near Jonesboro, AR, a distance of approximately 181.6 miles.

DEPARTMENT OF TRANSPORTATION

Surface Transportation Board

[STB Finance Docket No. 34040]

Riverview Trenton Railroad Company—Petition for Exemption From 49 U.S.C. 10901 To Acquire and Operate a Rail Line in Wayne County, MI

Pursuant to 49 U.S.C. 10502, the Surface Transportation Board (Board) is granting an exemption from the licensing provisions of 49 U.S.C. 10901 to the Riverview Trenton Railroad Company (RTR) to allow RTR to begin operation as a new railroad over 1.45 miles of track located on a site formerly owned by the McLouth Steel Company in the towns of Riverview and Trenton in Wayne County, Michigan. On this site, RTR plans to establish an intermodal terminal involving the interchange of rail, motor, and possibly at some undetermined future date, barge traffic. RTR also plans to transport traffic for the Detroit Steel Center, a steel mini-mill operating on an adjacent site. RTR seeks to interchange rail cars with line haul carriers operating adjacent to RTR.

In granting this exemption, the Board has analyzed a substantial record generated by RTR and opponents of the exemption. The analysis appears in a decision that is being issued simultaneously with the publication of this notice. That decision subjects RTR's project to comprehensive environmental, monitoring, and reporting conditions.

The decision is available on the Board's Web site at *www.stb.dot.gov.*

Decided: May 9, 2003.

By the Board, Chairman Nober and Commissioner Morgan.

Vernon A. Williams,

Secretary.

[FR Doc. 03–12144 Filed 5–14–03; 8:45 am]

BILLING CODE 4915–00–P

DEPARTMENT OF TRANSPORTATION

Surface Transportation Board

[STB Finance Docket No. 34345]

The Burlington Northern and Santa Fe Railway Company—Trackage Rights Exemption—Union Pacific Railroad Company

Union Pacific Railroad Company (UP) has agreed to grant limited overhead trackage rights to The Burlington Northern and Santa Fe Railway Company (BNSF)[1] over UP lines between Port Chicago, CA, at milepost 41.3 on UP's Tracy Subdivision, and Stege, CA, at milepost 9.3 on UP's Martinez Subdivision, a distance of approximately 28.7 miles—6.3 on the Tracy Subdivision and 22.4 miles on the Martinez Subdivision.

The transaction was scheduled to be consummated on May 2, 2003. The purpose of the trackage rights is to allow BNSF to bridge its train service while BNSF's main line is out of service due to maintenance.

As a condition to this exemption, any employees affected by the trackage rights will be protected by the conditions imposed in *Norfolk and Western Ry. Co.—Trackage Rights—BN*, 354 I.C.C. 605 (1978), as modified in *Mendocino Coast Ry., Inc.—Lease and Operate*, 360 I.C.C. 653 (1980).

This notice is filed under 49 CFR 1180.2(d)(7). If the notice contains false or misleading information, the exemption is void *ab initio.* Petitions to revoke the exemption under 49 U.S.C. 10502(d) may be filed at any time. The filing of a petition to revoke will not automatically stay the transaction.

An original and 10 copies of all pleadings, referring to STB Finance Docket No. 34345, must be filed with the Surface Transportation Board, 1925 K Street, NW., Washington, DC 20423–0001. In addition, a copy of each pleading must be served on Michael E. Roper, 2500 Lou Menk Drive, PO Box 961039, Fort Worth, TX 76161–0039.

Board decisions and notices are available on our website at ''*www.stb.dot.gov.*''

By the Board, David M. Konschnik, Director, Office of Proceedings.

Decided: May 7, 2003.

Vernon A. Williams,

Secretary.

[FR Doc. 03–12000 Filed 5–14–03; 8:45 am]

BILLING CODE 4915–00–P

[1] On May 6, 2003, BNSF filed a petition for termination of this trackage rights exemption in *Burlington Northern and Santa Fe Railway Company-Trackage Rights Exemption-Union Pacific Railroad Company*, STB Finance Docket No. 34345 (Sub-No. 1), wherein BNSF requests that the Board permit the proposed overhead trackage rights arrangement described in the present proceeding to expire on or about May 22, 2003. That petition will be addressed by the Board in a separate decision.

DEPARTMENT OF TRANSPORTATION

Bureau of Transportation Statistics

Reports, Forms and Recordkeeping Requirements; Activity Under OMB Review: Part 249 Preservation of Records

AGENCY: Bureau of Transportation Statistics (BTS), DOT.

ACTION: Notice.

SUMMARY: In compliance with the Paperwork Reduction Act of 1995 (44 U.S.C. 3501 *et seq.*), this notice announces that the Information Collection Request (ICR) abstracted below has been forwarded to the Office of Management and Budget (OMB) for extension of currently approved collections. The ICR describes the nature of the information collection and its expected burden. The **Federal Register** Notice with a 60-day comment period soliciting comments on the following collection of information was published on February 26, 2003 (68 FR vol. 68, page 8958).

DATES: Written comments should be submitted by June 16, 2003.

FOR FURTHER INFORMATION CONTACT: Bernie Stankus, Office of Airline Information, K–14, Room 4125, Bureau of Transportation Statistics, 400 Seventh Street, SW., Washington, DC 20590–0001, Telephone Number (202) 366–4387, Fax Number (202) 366–3383 or e-mail *bernard.stankus@bts.gov.*

SUPPLEMENTARY INFORMATION:

Bureau of Transportation Statistics (BTS)

Title: Part 249 Preservation of Records.

Type of Request: Extension of a currently approved collection.

OMB Control Number: 2138–0006.

Forms: None.

Affected Public: U.S. certificated carriers, public charter operators and overseas military personnel charter operators.

Abstract: Title 14 CFR part 249 requires U.S. certificated air carriers, public charter operators and overseas military personnel charter operators to retain such records as general and subsidiary ledgers, journals and journal vouchers, voucher distribution registers, accounts receivable and payable journals and ledgers, subsidy records documenting underlying financial and statistical reports to the Department, funds reports, consumer records, sales reports, auditors' and flight coupons, air waybills, etc. Depending on the nature of the document, it may be retained for a period of 30 days to 3 years. Public charter and overseas military personnel charter operators must retain documents which evidence or reflect deposits made by each charter participant and commissions received by, paid to, or deducted by travel agents, and all statements, invoices, bills and receipts from suppliers or furnishers of goods and services in connection with the tour or charter. These records are retained for 6 months after completion of the charter program.

Estimated Annual Burden Hours: 660 hours.

ADDRESSES: Send comments to the Office of Information and Regulatory Affairs, Office of Management and Budget, 725—17th Street, NW., Washington, DC 20503, Attention BTS Desk Officer.

Comments are invited on whether the record retention requirements are necessary for the proper performance of the functions of the Department, including whether the record retention requirements have practical utility; whether the accuracy of the Department's estimate of burden hours is correct. Also, commenters are invited to provide suggestions on ways to enhance the quality, utility, and clarity of the information to be collected; and ways to minimize the burden of the requirements on respondents, including the use of automated techniques or other forms of information technology.

Issued in Washington, DC, on May 8, 2003.

Donald W. Bright,

Assistant Director, Office of Airline Information.

[FR Doc. 03–12046 Filed 5–14–03; 8:45 am]

BILLING CODE 4910–FE–P

DEPARTMENT OF TRANSPORTATION

Bureau of Transportation Statistics

Reports, Forms and Recordkeeping Requirements; Activity Under OMB Review: Report of Extension of Credit to Political Candidates

AGENCY: Bureau of Transportation Statistics (BTS), DOT.

ACTION: Notice.

SUMMARY: In compliance with the Paperwork Reduction Act of 1995 (44 U.S.C. 3501 *et seq.*), this notice announces that the Information Collection Request (ICR) abstracted below has been forwarded to the Office of Management and Budget (OMB) for extension of currently approved collections. The ICR describes the nature of the information collection and its expected burden. The **Federal Register** Notice with a 60-day comment period soliciting comments on the following collection of information was published on February 26, 2003 (68 FR vol. 68, page 8959).

DATES: Written comments should be submitted by June 16, 2003.

FOR FURTHER INFORMATION CONTACT: Bernie Stankus, Office of Airline Information, K–14, Room 4125, Bureau of Transportation Statistics, 400 Seventh Street, SW., Washington, DC 20590–0001, Telephone Number (202) 366–4387, Fax Number (202) 366–3383 or e-mail *bernard.stankus@bts.gov.*

SUPPLEMENTARY INFORMATION:

Bureau of Transportation Statistics (BTS)

Title: Report of Extension of Credit to Political Candidates.

Type of Request: Extension of a currently approved collection.

OMB Control Number: 2138–0016.

Forms: 183.

Affected Public: U.S. air carriers that extend credit to political candidates during Federal elections.

Background

The Department uses this Form 183 as the means to fulfill its obligation under the Federal Election Campaign Act of 1971 (the Act). The Act's legislative history indicates that one of its statutory goals is to prevent candidates for Federal political office from incurring large amounts of unsecured debt with regulated transportation companies (*e.g.* airlines). This information collection allows the Department to monitor and disclose the amount of unsecured credit extended by airlines to candidates for Federal office. All certificated air carriers are required to submit this information.

Estimated Annual Burden Hours: 24 hours.

ADDRESSES: Send comments to the Office of Information and Regulatory Affairs, Office of Management and Budget, 725—17th Street, NW., Washington, DC 20503, Attention BTS Desk Officer.

Comments are invited on: Whether this collection of information is necessary for the proper performance of the functions of the Department concerning extension of credit to political candidates by airlines. Comments should address whether the information will have practical utility; the accuracy of the Department's estimate of the burden of the proposed information collection; ways to enhance the quality, utility and clarity of the information to be collected; and ways to minimize the burden of the collection of information on respondents, including the use of automated collection techniques or other forms of information technology.

The Confidential Information Protection and Statistical Efficiency Act of 2002 (44 U.S.C. 3501 note), requires a statistical agency to clearly identify information it collects for non-statistical purposes. BTS hereby notifies the respondents and the public that BTS uses the information it collects under this OMB approval for non-statistical purposes including, but not limited to, publication of both Respondent's identity and its data, submission of the information to agencies outside BTS for review, analysis and possible use in regulatory and other administrative matters.

Issued in Washington, DC, on May 8, 2003.

Donald W. Bright,

Assistant Director, Airline Information, Bureau of Transportation Statistics.

[FR Doc. 03–12047 Filed 5–14–03; 8:45 am]

BILLING CODE 4910–FE–P

DEPARTMENT OF THE TREASURY

Internal Revenue Service

Proposed Collection; Comment Request for Revenue Procedure 2003–37

AGENCY: Internal Revenue Service (IRS), Treasury.

ACTION: Notice and request for comments.

SUMMARY: The Department of the Treasury, as part of its continuing effort to reduce paperwork and respondent burden, invites the general public and other Federal agencies to take this opportunity to comment on proposed and/or continuing information collections, as required by the Paperwork Reduction Act of 1995, Public Law 104–13 (44 U.S.C. 3506(c)(2)(A)). Currently, the IRS is soliciting comments concerning Revenue Procedure 2003–37, Documentation Provisions for Certain Taxpayers Using the Fair Market Value Method.

DATES: Written comments should be received on or before July 14, 2003 to be assured of consideration.

ADDRESSES: Direct all written comments to Glenn P. Kirkland, Internal Revenue Service, room 6411, 1111 Constitution Avenue NW., Washington, DC 20224.

FOR FURTHER INFORMATION CONTACT: Requests for additional information or copies of the revenue procedure should be directed to Carol Savage at Internal Revenue Service, room 6407, 1111 Constitution Avenue NW., Washington, DC 20224, or at (202) 622–3945, or through the Internet at *CAROL.A.SAVAGE@irs.gov.*

SUPPLEMENTARY INFORMATION:

Title: Documentation Provisions for Certain Taxpayers Using the Fair Market Value Method of Internet Expense Apportionment.

OMB Number: 1545–1833.

Revenue Procedure Number: Revenue Procedure 2003–37.

Abstract: Revenue Procedure 2003–37 describes documentation and information a taxpayer that uses the fair market value method of apportionment of interest expense may prepare and make available to the Service upon request in order to establish the fair market value of the taxpayer's assets to the satisfaction of the Commissioner as required by § 1.861–9T(g)(1)(iii). It also sets forth the procedures to be followed in the case of elections to use the fair market value method.

Current Actions: There are no changes being made to the revenue procedure at this time.

Type of Review: Extension of a currently approved collection.

Affected Public: Business or other for-profit organizations.

Estimated Number of Respondents and/or Recordkeepers: 125.

Estimated Average Time Per Respondent/Recordkeeper: 5 hours.

Estimated Total Annual Reporting and/or Recordkeeping Burden: 625 hours.

The following paragraph applies to all of the collections of information covered by this notice:

An agency may not conduct or sponsor, and a person is not required to respond to, a collection of information unless the collection of information displays a valid OMB control number. Books or records relating to a collection of information must be retained as long as their contents may become material in the administration of any internal revenue law. Generally, tax returns and tax return information are confidential, as required by 26 U.S.C. 6103.

Request for Comments: Comments submitted in response to this notice will be summarized and/or included in the request for OMB approval. All comments will become a matter of public record. Comments are invited on: (a) Whether the collection of information is necessary for the proper performance of the functions of the agency, including whether the information shall have practical utility; (b) the accuracy of the agency's estimate of the burden of the collection of information; (c) ways to enhance the quality, utility, and clarity of the information to be collected; (d) ways to minimize the burden of the collection of information on respondents, including through the use of automated collection techniques or other forms of information technology; and (e) estimates of capital or start-up costs and costs of operation, maintenance, and purchase of services to provide information.

Approved: May 8, 2003.

Glenn P. Kirkland,

IRS Reports Clearance Officer.

[FR Doc. 03–12187 Filed 5–14–03; 8:45 am]

BILLING CODE 4830–01–P

DEPARTMENT OF THE TREASURY

Internal Revenue Service

Proposed Collection; Comment Request for Form 8876

AGENCY: Internal Revenue Service (IRS), Treasury.

ACTION: Notice and request for comments.

SUMMARY: The Department of the Treasury, as part of its continuing effort to reduce paperwork and respondent burden, invites the general public and other Federal agencies to take this opportunity to comment on proposed and/or continuing information collections, as required by the Paperwork Reduction Act of 1995, Public Law 104–13 (44 U.S.C. 3506(c)(2)(A)). Currently, the IRS is soliciting comments concerning Form 8876, Excise Tax on Structured Settlement Factoring Transactions.

DATES: Written comments should be received on or before July 14, 2003 to be assured of consideration.

ADDRESSES: Direct all written comments to Glenn P. Kirkland, Internal Revenue Service, room 6411, 1111 Constitution Avenue NW., Washington, DC 20224.

FOR FURTHER INFORMATION CONTACT: Requests for additional information or copies of the form and instructions should be directed to Carol Savage at Internal Revenue Service, room 6407, 1111 Constitution Avenue NW., Washington, DC 20224, or at (202) 622–3945, or through the internet at *CAROL.A.SAVAGE@irs.gov.*

SUPPLEMENTARY INFORMATION:

Title: Excise Tax on Structured Settlement Factoring Transactions.

OMB Number: 1545–1826.

Form Number: 8876.

Abstract: Form 8876 is used to report structured settlement transactions and pay the applicable excise tax.

Current Actions: There are no changes being made to the form at this time.

Type of Review: Extension of a currently approved collection.

Affected Public: Business or other for-profit organizations and individual.

Estimated Number of Respondents: 100.

Estimated Time Per Respondent: 5 hours, 36 minutes.

Estimated Total Annual Burden Hours: 560.

The following paragraph applies to all of the collections of information covered by this notice:

An agency may not conduct or sponsor, and a person is not required to respond to, a collection of information unless the collection of information displays a valid OMB control number. Books or records relating to a collection of information must be retained as long as their contents may become material in the administration of any internal revenue law. Generally, tax returns and tax return information are confidential, as required by 26 U.S.C. 6103.

Request for Comments: Comments submitted in response to this notice will be summarized and/or included in the request for OMB approval. All comments will become a matter of public record. Comments are invited on: (a) Whether the collection of information is necessary for the proper performance of the functions of the agency, including whether the information shall have practical utility; (b) the accuracy of the agency's estimate of the burden of the collection of information; (c) ways to enhance the quality, utility, and clarity of the information to be collected; (d) ways to minimize the burden of the collection of information on respondents, including through the use of automated collection techniques or other forms of information technology; and (e) estimates of capital or start-up costs and costs of operation, maintenance, and purchase of services to provide information.

Approved: May 9, 2003.

Carol Savage,

Management and Program Analyst.

[FR Doc. 03–12188 Filed 5–14–03; 8:45 am]

BILLING CODE 4830–01–P

DEPARTMENT OF THE TREASURY

Internal Revenue Service

Proposed Collection; Comment Request for Revenue Procedure 2003–39

AGENCY: Internal Revenue Service (IRS), Treasury.

ACTION: Notice and request for comments.

SUMMARY: The Department of the Treasury, as part of its continuing effort to reduce paperwork and respondent burden, invites the general public and other Federal agencies to take this opportunity to comment on proposed and/or continuing information collections, as required by the Paperwork Reduction Act of 1995, Public Law 104–13 (44 U.S.C. 3506(c)(2)(A)). Currently, the IRS is soliciting comments concerning Revenue Procedure 2003–39, Section 1031 LKE (Like-Kind Exchanges) Auto Leasing Programs.

DATES: Written comments should be received on or before July 14, 2003 to be assured of consideration.

ADDRESSES: Direct all written comments to Glenn P. Kirkland, Internal Revenue Service, room 6411, 1111 Constitution Avenue NW., Washington, DC 20224.

FOR FURTHER INFORMATION CONTACT: Requests for additional information or copies of the revenue procedure should be directed to Carol Savage at Internal Revenue Service, room 6407, 1111 Constitution Avenue NW., Washington, DC 20224, or at (202) 622–3945, or through the internet at *CAROL.A.SAVAGE@irs.gov.*

SUPPLEMENTARY INFORMATION:

Title: Section 1031 LKE (Like-Kind Exchanges) Auto Leasing Programs.

OMB Number: 1545–1834.

Revenue Procedure Number: Revenue Procedure 2003–39.

Abstract: Revenue Procedure 2003–39 provides safe harbors for certain aspects of the qualification under § 1031 of certain exchanges of property pursuant to LKE Programs for federal income tax purposes.

Current Actions: There are no changes being made to the revenue procedure at this time.

Type of Review: Extension of a currently approved collection.

Affected Public: Business or other for-profit organizations.

Estimated Number of Respondents: 8,600.

Estimated Average Time Per Respondent: 1 hour.

Estimated Total Annual Burden Hours: 8,600.

The following paragraph applies to all of the collections of information covered by this notice:

An agency may not conduct or sponsor, and a person is not required to respond to, a collection of information unless the collection of information displays a valid OMB control number. Books or records relating to a collection of information must be retained as long as their contents may become material in the administration of any internal revenue law. Generally, tax returns and tax return information are confidential, as required by 26 U.S.C. 6103.

Request for Comments: Comments submitted in response to this notice will be summarized and/or included in the request for OMB approval. All comments will become a matter of public record. Comments are invited on: (a) Whether the collection of information is necessary for the proper performance of the functions of the agency, including whether the information shall have practical utility; (b) the accuracy of the agency's estimate of the burden of the collection of information; (c) ways to enhance the quality, utility, and clarity of the information to be collected; (d) ways to minimize the burden of the collection of information on respondents, including through the use of automated collection techniques or other forms of information technology; and (e) estimates of capital or start-up costs and costs of operation, maintenance, and purchase of services to provide information.

Approved: May 8, 2003.

Glenn P. Kirkland,

IRS Reports Clearance Officer.

[FR Doc. 03–12189 Filed 5–14–03; 8:45 am]

BILLING CODE 4830–01–P

UNITED STATES INSTITUTE OF PEACE

Announcement of Senior Fellowship Competition

AGENCY: United States Institute of Peace.

ACTION: Notice.

SUMMARY: The agency is soliciting applications for Senior Fellowships from scholars or practitioners who conduct research related to the peaceful resolution of international conflict. Fellowship entails residence at agency in Washington, DC, for up to ten months beginning October 1, 2004.

DATES: Application Material Available Upon Request. *Receipt Date for Return of Applications:* September 15, 2003. *Notification of Awards:* April, 2004.

ADDRESSES: For application materials, visit the Institute's Web site at *http://www.usip.org,* or contact: United States Institute of Peace, Jennings Randolph Program, 1200 17th Street, NW., Suite 200, Washington, DC 20036–3011, (202) 429–6063 (fax), (202) 457–1719 (TTY), *jrprogram@usip.org* (e-mail).

FOR FURTHER INFORMATION CONTACT: Jennings Randolph Program, Phone (202) 429–3886.

Dated: April 2, 2003.

Bernice J. Carney,

Director, Office of Administration.

[FR Doc. 03–12141 Filed 5–14–03; 8:45 am]

BILLING CODE 6820–AR–M

Federal Register

Thursday,
May 15, 2003

Part II

Department of Transportation

National Highway and Traffic Safety Administration

49 CFR Part 571

Federal Motor Vehicle Safety Standards; Brake Hoses; Proposed Rule

DEPARTMENT OF TRANSPORTATION

National Highway Traffic Safety Administration

49 CFR Part 571

[Docket No. 03–14483, No. 1]

RIN 2127–AH79

Federal Motor Vehicle Safety Standards; Brake Hoses

AGENCY: National Highway Traffic Safety Administration (NHTSA), Department of Transportation (DOT).

ACTION: Notice of proposed rulemaking.

SUMMARY: Pursuant to the agency's grant of a joint petition from Elf Atochem North America, Inc., Mark IV Industrial/Dayco Eastman, and Parker Hannifin Corporation, NHTSA proposes to update the Federal motor vehicle safety standard on brake hoses to incorporate the substantive specifications of several Society of Automotive Engineers (SAE) Recommended Practices relating to hydraulic brake hoses, vacuum brake hoses, air brake hoses, and plastic air brake tubing.

DATES: Comments must be received on or before July 14, 2003.

ADDRESSES: Comments should refer to the docket number above and be submitted to: Docket Section, National Highway Traffic Safety Administration, 400 Seventh Street, SW, Washington, DC 20590. Alternatively, you may submit your comments electronically by logging onto the Docket Management System (DMS) Web site at *http://dms.dot.gov*. Click on ''Help & Information'' or ''Help/Info'' to view instructions for filing your comments electronically. Regardless of how you submit your comments, you should mention the docket number of this document.

You may call the Docket at 202–366–9324. Docket hours are 9:30 a.m. to 4 p.m., Monday through Friday.

FOR FURTHER INFORMATION CONTACT: For non-legal issues, Mr. Jeffrey Woods, Vehicle Dynamics Division, Office of Vehicle Safety Standards (Telephone: 202–366–6206) (Fax: 202–366–4921). Mr. Woods' mailing address is National Highway Traffic Safety Administration/DOT, NPS–22, 400 Seventh St., SW., Washington, DC 20590.

For legal issues, Mr. George Feygin, Office of the Chief Counsel (Telephone: 202–366–2992) (Fax: 202–366–3820). Mr. Feygin's mailing address is National Highway Traffic Safety Administration, NCC–20, 400 Seventh St., SW., Washington, DC 20590.

SUPPLEMENTARY INFORMATION:

Table of Contents

I. Background
II. Joint Petition for Rulemaking
III. Summary of Response to Petition
IV. NHTSA's Proposed Revisions to FMVSS No. 106
A. Hydraulic Brake Hoses
1. Pressure Test
2. Constriction
3. Volumetric Expansion
4. Whip Resistance Test
5. Tensile Strength
6. Water Absorption and Pressure Test, Tensile Strength, and Whip Resistance
7. Low temperature Resistance Test
8. Brake Fluid Compatibility, Constriction, and Burst Strength
9. Ozone Resistance
10. End Fitting Corrosion Resistance
11. High Temperature Impulse Test
B. Air Brake Hoses
1. Dimensional Requirements
2. Construction and Labeling
3. Manufacturer Identification
4. Constriction
5. High Temperature Resistance
6. Low Temperature Resistance
7. Oil Resistance
8. Ozone Resistance
9. Length Change
10. Adhesion
11. Air Pressure (leakage)
12. Burst Strength
13. Tensile Strength
14. Water Absorption and Tensile Strength
15. Zinc Chloride Resistance
16. End Fitting Corrosion Resistance
17. Minimum Bend Radius
C. Vacuum Brake Hoses
1. Constriction
2. High Temperature Resistance
3. Low Temperature Resistance
4. Ozone Resistance
5. Burst Strength
6. Vacuum Deformation
7. Bend Test
8. Swell (Fuel Resistance)
9. Adhesion
10. Deformation
11. End Fitting Corrosion Resistance
D. Plastic Air Brake Tubing
1. Classification
2. Dimensions and Tolerances
3. One Hundred Percent Leak Test
4. Burst Test
5. Moisture Absorption
6. Ultraviolet Resistance
7. Cold temperature Flexibility
8. Heat Aging
9. Zinc Chloride Resistance
10. Methyl Alcohol Resistance
11. Stiffness
12. Boiling Water Stabilization and Burst Test
13. Cold Temperature Impact
14. Adhesion
15. Heat Aging and Adhesion Test
16. Collapse Resistance
17. Oil Resistance
18. Ozone Resistance
E. Plastic Air Brake Tubing Assemblies and End Fittings
1. Tensile Strength
2. Hot Tensile Strength
3. Conditioned Pull Test
4. Vibration Leak Test
5. Proof and Burst Test
6. Serviceability Test
7. Fitting Compatibility Test
8. Constriction
9. End Fitting Dimensional Requirements
10. End Fitting Corrosion Resistance
V. Rulemaking Analyses and Notices
A. Executive Order 12866 and DOT Regulatory Policies and Procedures
B. Regulatory Flexibility Act
C. National Environmental Policy Act
D. Executive Order 13132 (Federalism)
E. Civil Justice Reform
F. Paperwork Reduction Act
G. National Technology Transfer and Advancement Act
H. Unfunded Mandates Reform Act
I. Plain Language
J. Regulation Identifier Number (RIN)
K. Comments

I. Background

This document responds to a joint petition for rulemaking filed on October 30, 1998, by Elf Atochem North America, Inc., Mark IV Industrial/Dayco Eastman, and Parker Hannifin Corporation, three brake hose manufacturers. The petitioners request that certain requirements relating to brake hoses, brake hose tubing, and brake hose end fittings that are presently administered by the Federal Motor Carrier Safety Administration (FMCSA) be incorporated into the brake hose standard that is currently administered by the National Highway Traffic Safety Administration (''NHTSA'' or the ''agency''). Specifically, the petitioners request incorporation of the requirements in § 393.45 (Brake tubing and hose, adequacy) and § 393.46 (Brake tubing and hose connections) of the Federal Motor Carrier Safety Regulations (FMCSR) into § 571.106 (Brake hoses) of the Federal motor vehicle safety standards (''FMVSS'').

Sections 393.45 and 393.46 of the FMCSRs require that brake hose, tubing, and fittings on ''commercial motor vehicles'' be maintained according to certain specifications adopted by the Society of Automotive Engineers (''SAE''). A ''commercial motor vehicle'' is defined, in § 393.5 of the FMCSRs, as

> any self-propelled or towed motor vehicle used on a highway in interstate commerce to transport passengers or property when the vehicle—
>
> (1) Has a gross vehicle weight rating or gross combination weight rating, or gross vehicle weight or gross combination weight, of 4,537 kg (10,001 lbs.) or more; whichever is greater; or
>
> (2) Is designed or used to transport more than 8 passengers (including the driver) for compensation; or
>
> (3) Is designed or used to transport more than 15 passengers, including the driver, and is not used to transport passengers for compensation; or

(4) Is used in transporting material found by the Secretary of Transportation to be hazardous under 49 U.S.C. 5103 and transported in a quantity requiring placarding under regulations prescribed by the Secretary under 49 CFR, subtitle B, chapter I, subchapter C.[1]

Pursuant to § 393.45, brake tubing and hose on commercial motor vehicles must conform to the following SAE specifications: SAE Recommended Practice J1149 (Metallic Air Brake System Tubing and Pipe—July 1976); SAE Recommended Practice J844 (Nonmetallic Air Brake System Type B—October 1980); SAE Recommended Practice J1402 (Automotive Air Brake Hose and Hose Assemblies—June 1985); SAE Recommended Practice J1401 (Road Vehicle Hydraulic Brake Hose Assemblies for Use with Non Petroleum Base Hydraulic Fluid—June 1985); and SAE Recommended Practice J1403 (Vacuum Brake Hose—June 1985). Under section 393.46, tube fittings on commercial motor vehicles must conform to the requirements of either SAE Standard J512 (Automotive Tube Fittings—October 1980) or SAE J246 (Spherical and Flanged Sleeve (Compression) Tube Fittings—March 1981).

The Federal Highway Administration (''FHWA''), which was responsible for administering the FMCSRs prior to the formation of the Federal Motor Carrier Safety Administration, issued a Notice of Proposed Rulemaking on April 14, 1997 (62 FR 18170). The FHWA proposed amending part 393 of the FMSCRs to, among other things, remove obsolete and redundant regulations and resolve inconsistencies between part 393 and NHTSA's FMVSS. The FHWA stated that because it has no statutory authority to regulate vehicle manufacturers or manufacturers of brake hose, tubing, or fittings, all such regulations should be included in NHTSA's FMVSS rather than in the FMCSRs. The FHWA proposed adopting a requirement that commercial motor vehicles be maintained in compliance with FMVSS No. 106.

Accordingly, FHWA's NPRM included a proposal to delete from §§ 393.45 and 393.46 all but one of the references to SAE specifications applicable to metallic brake tubing, nonmetallic brake tubing, air brake hose, hydraulic brake hose, vacuum brake hose, air brake tube fittings, and spherical and flanged sleeve tube fittings. In place of the SAE specifications, FHWA proposed that § 393.45 state that all brake hose and tubing, brake hose assemblies, and fittings must meet the applicable requirements of FMVSS No. 106. The proposal included retaining one reference to SAE J844 in § 393.45 for coiled nylon brake hose and hose assemblies. Presently, FMVSS No. 106 excludes coiled nylon brake hose/assemblies that comply with FMCSR § 393.45 from certain requirements, namely S7.3.6 (length change), S7.3.10 (tensile strength), and S7.3.11 (tensile strength of an assembly after immersion in water).

FHWA's NPRM aroused concerns. Several brake hose manufacturers and one engineering consultant submitted comments objecting to the proposed deletion of all but one reference to the SAE specifications from §§ 393.45 and 393.46 of the FMCSRs. In addition, a letter signed by 44 Members of Congress was sent to the Secretary of Transportation on November 3, 1997, expressing their concern over FHWA's proposal to repeal its safety standards for commercial motor vehicle brake hose, brake tubing, and fittings.

In response to these concerns, the Department of Transportation held a public meeting on March 24, 1998. In attendance were representatives from FHWA and NHTSA, several brake hose/tubing/fitting manufacturers, a truck manufacturer, a truck manufacturers association, an explosives manufacturer, a truck users association, and United States Congressman Thomas Sawyer (D-Ohio).

At the public meeting, representatives from NHTSA and FHWA said that they favored consolidating all requirements for brake hose, brake tubing, and fittings in FMVSS No. 106, instead of maintaining separate requirements under the jurisdiction of two different agencies. They explained that consolidation of the requirements would, among other things, make them more enforceable. Some of the brake component manufacturers stated their opposition to deleting the SAE specifications for their products. FHWA and NHTSA indicated that anyone opposed to FHWA's proposal was welcome to file a petition for rulemaking requesting that the SAE specifications proposed for deletion for the FMCSRs be incorporated into FMVSS No. 106.

II. Joint Petition for Rulemaking

On October 30, 1998, Elf Atochem North America, Inc., Mark IV Industrial/Dayco Eastman, and Parker Hannifin Corporation jointly submitted a petition for rulemaking asking the agency to incorporate into FMVSS No. 106 the SAE specifications for brake hose, brake tubing, and fittings that FHWA proposed deleting from §§ 393.45 and 393.46 of the FMCSRs. The petition requested that the application of these SAE specifications be limited to hose, tubing, and fittings used on trucks, truck-trailer combinations, and buses with either a GVWR greater than 10,000 lbs. or which are designed to transport 16 or more people, including the driver. In addition, the petitioners requested that the current versions of the SAE specifications be adopted instead of the older versions cited in the FMCSRs.

III. NHTSA's Response to the Joint Petition

NHTSA has decided to grant the joint petition for rulemaking. The agency agrees with the petitioners that there is a safety need to transfer the brake hose, tubing, and fitting requirements currently contained in §§ 393.45 and 393.46 of the FMCSRs to FMVSS No. 106, before those requirements are deleted. NHTSA tentatively concludes that to ensure the continued safety of commercial motor vehicle braking systems, the substantive specifications of the SAE Recommended Practices should be incorporated into FMVSS No. 106, with a few exceptions as noted. This would involve, among other changes, establishing a new category in the standard for plastic air brake tubing, end fittings, and tubing assemblies.

NHTSA's decision to grant the joint petition is also based on the fact that FMVSS No. 106 has not been substantially updated in many years. Revisions over the past 20 years have primarily addressed labeling issues, inclusion of metric-sized brake hoses, updating test fluids to match advances in industry, and minor regulatory revisions to individual test conditions such as the whip test and the adhesion test. The agency notes that most of the substantive requirements currently in Standard 106, other than the labeling requirements, were originally based on SAE standards and American Society for Testing and Materials (ASTM) standards referenced therein. While the SAE and ASTM standards have been modified over time to keep pace with technological developments in the industry, the substantive requirements of FMVSS No. 106 have remained relatively unchanged. Therefore, NHTSA's proposed changes to Standard No. 106 would take into account the substantial technological developments that have occurred and align the

[1] The FMCSRs contain two different definitions of ''commercial motor vehicle': one in § 393.5 and another in section 382.107. The latter definition is narrower than the former. We note that all references throughout this document to ''commercial motor vehicle'' are to the broader definition found in section 393.5.

standard's requirements with standard industry practices. Incorporating many of the SAE standard's performance requirements is consistent with Office of Management and Budget (OMB) Circular A–119, which directs federal agencies to use and/or develop voluntary consensus industry standards, in accordance with Public Law 104–113, the ''National Technology Transfer and Advancement Act of 1995.''

The agency's proposal differs in a number of respects, however, from that requested by the petitioners—

First, as explained in greater detail below, instead of simply incorporating complete SAE standards by reference as the FMCSRs currently do, NHTSA proposes to incorporate only the specific requirements/specifications of the SAE standards that are either more rigorous than those in Standard No. 106 or are not present at all in FMVSS No. 106.

Second, the agency does not propose to limit the application of those SAE requirements/specifications to brake hose, tubing, and fittings used on commercial motor vehicles. NHTSA tentatively concludes that all brake hose, tubing, and fittings can and should meet the requirements/specifications, regardless of their end use.

Third, although NHTSA agrees with the petitioners that proposed changes to FMVSS No. 106 should be based on the most recent versions of the SAE standards, instead of the older versions cited in the FMCSRs, the agency notes that a number of SAE's standards have been updated since the joint petition was filed. Accordingly, NHTSA proposes to rely on the most recent versions of the SAE standards.

Fourth, the agency does not propose to incorporate SAE standards relating to copper tubing, galvanized steel pipe, or end fittings used with metallic or non-metallic tubing because these materials are occasionally used in chassis plumbing and these products are not considered to be brake hoses, thus it would not be appropriate to include them in FMVSS No. 106.

Fifth, NHTSA is not proposing to incorporate the material and construction specifications for Type A and Type B tubing contained in SAE J844, *Nonmetallic Air Brake System Tubing*, and SAE J1394, *Metric Nonmetallic Air Brake System Tubing* because the agency tentatively concludes that incorporating those material specifications would be design-restrictive.

Sixth, NHTSA does not propose to incorporate the manufacturer identification requirements in SAE J1401, *Hydraulic Brake Hose Assemblies for Use with Nonpetroleum-Base Hydraulic Fluids*, because it tentatively concludes that the manufacturer identification requirements already present in FMVSS No. 106 are sufficient.

IV. Proposed Revisions to FMVSS No. 106

The following sections describe the changes NHTSA proposes to make to Standard No. 106's performance requirements and test procedures relating to: (a) Hydraulic brake hose; (b) air brake hose; (c) vacuum brake hose; (d) plastic air brake tubing; and (e) plastic air brake tubing assemblies and end fittings. Each section contains a table comparing the performance requirements and test procedures of FMVSS No. 106 to the relevant SAE Recommended Practice/Standard and a requirement-by-requirement/procedure-by-procedure explanation of the changes NHTSA is proposing. Generally speaking, whenever an SAE specification is more stringent than the corresponding FMVSS No. 106 requirement/procedure, NHTSA proposes to incorporate the SAE specification.

A. Hydraulic Brake Hoses

NHTSA's performance requirements and test procedures relating to hydraulic brake hoses are located in paragraph S5., *Requirements—Hydraulic brake hose, brake hose assemblies, and brake hose end fittings*, and paragraph S6., *Test procedures—Hydraulic brake hose, brake hose assemblies, and brake hose end fittings* of FMVSS No. 106. The corresponding SAE specifications are contained in SAE Surface Vehicle Standard J1401, *Hydraulic Brake Hose Assemblies for Use with Nonpetroleum-Base Hydraulic Fluids, Rev. September 1999* (SAE J1401).

The performance requirements and test procedures for hydraulic brake hoses in FMVSS No. 106 and SAE J1401 are similar, but not identical. In many cases, the requirements and procedures in SAE J1401 are more stringent than the corresponding requirements and procedures in paragraphs S5 and S6 of FMVSS No. 106. For example, in recognition of the fact that underhood temperatures have increased in modern passenger cars and, therefore, front brake hoses near the engine compartment are subjected to these higher temperatures, SAE J1401 recommends subjecting hydraulic brake hose to a hot impulse test. In contrast, FMVSS No. 106 does not specify a hot impulse test because many of the specifications in the standard originated in the late 1960s, when underhood temperatures were lower.

Generally, in those instances in which the performance requirements and test procedures in SAE J1401 are more rigorous, as with the hot impulse test specification, NHTSA is proposing to incorporate the SAE J1401 requirement/procedure. Where the requirements and procedures of FMVSS No. 106 are either more stringent or are not addressed at all in SAE J1401, however, the agency is proposing to retain the FMVSS No. 106 requirement/procedure.

The agency notes that because the reach of § 393.45 of the FMCSRs is limited to ''commercial motor vehicles,'' the performance requirements and test procedures in SAE J1401 are, at present, only being applied to hydraulic brake hose in use on those vehicles. In contrast, FMVSS No. 106's requirements/procedures apply to all hydraulic brake hoses, regardless of their end use. One question that arises in connection with NHTSA's proposal to incorporate many of SAE J1401's specifications, therefore, is whether to restrict application of those specifications to hydraulic brake hoses designed for use on commercial motor vehicles. NHTSA proposes to apply the specifications of SAE J1401 to all hydraulic brake hoses, regardless of the type of vehicle on which it is installed. The agency does not favor the creation of a separate category of, for example, ''commercial'' hydraulic brake hoses that would include the more severe test conditions only for those particular brake hoses because NHTSA tentatively concludes that all types of brake hoses can and should meet the current SAE J1401 specifications.

Many light vehicles, including passenger cars, are currently manufactured using brake hoses that meet SAE J1401 specifications or other, proprietary standards that are more severe than Standard 106. Although it is not clear whether replacement brake hoses are also designed to meet these more rigorous specifications, NHTSA tentatively concludes that it is in the interest of safety to specify that they do so. From a safety standpoint, if a replacement brake hose which does not meet SAE J1401 specifications were to be installed on a vehicle originally outfitted with hose designed to meet the specifications of SAE J1401 (or another proprietary standard more stringent than FMVSS No. 106), the vehicle brake hose would be more prone to failure. Requiring all hydraulic brake hoses, both original equipment manufacturer (OEM) brake hoses and replacement brake hoses, to meet the current SAE J1401 requirements/specifications

should substantially decrease the likelihood of brake hose failure. NHTSA welcomes comments, however, regarding the appropriateness of applying SAE J1401's requirements/specifications to all hydraulic brake hoses, regardless of their end use or whether they are OEM hoses or replacement hoses.

A detailed discussion of the differences between the hydraulic brake hose performance requirements and test procedures in SAE J1401 and FMVSS No. 106 follows, along with the agency's proposed resolution of those differences.

1. Pressure Test

SAE J1401 specifies a test pressure of 1,500 psi minimum and 2,100 psi maximum for inert gas or air tests and 3,000 psi minimum and 3,500 psi maximum for water and brake fluid tests, with the hose assembly required to sustain these pressures for 10 to 20 seconds, as a preconditioning test for all samples of hose assemblies to be subjected to further test conditions. The burst test (following the expansion test; *see* S5.3.2) specifies a minimum requirement of 4,000 psi plus zero (0) minus 200 psi for 2 minutes, using water or brake fluid, followed by a pressure increase to the point of failure. The minimum failure for ⅛ inch hose is 7,000 psi and for 3⁄16 hose is 5,000 psi. SAE J1401 does not specify test conditions for hose sizes other than ⅛ or 3⁄16 inch.

In contrast, FMVSS No. 106 specifies a water pressure test of 4,000 psi for 2 minutes and 5,000 psi minimum burst strength. The performance requirements and test procedures are similar to those in SAE J1401, although FMVSS No. 106 includes a lower pressure requirement for ⅛ hose (5,000 psi) and includes requirements for hose with inside diameters of ¼ inch or larger.

NHTSA tentatively concludes that a higher, 7,000 psi burst strength requirement should be adopted for ⅛ inch and 3mm hydraulic brake hoses. NHTSA contacted Intertek Testing Services, a company that has performed compliance testing of brake hoses under contract to the agency, to determine if the 7,000-psi pressure has been sustained by brake hoses in past testing. Intertek indicated that it typically will test up to 10,000 psi for all sizes of hydraulic brake hose, and that the hose have consistently been able to sustain this much pressure without bursting. Therefore, NHTSA proposes that the 7,000 psi burst strength requirement from SAE J1401 be adopted into Standard No. 106 for ⅛ inch and 3 mm hydraulic brake hoses.

2. Constriction

SAE J1401's constriction requirement is limited to hydraulic brake hose with an internal hose diameter of ⅛ inch or 3⁄16 inch. SAE J1401 specifies a minimum pass-through diameter of 64 percent of nominal internal hose diameter, which is determined by performing a plug gage test. FMVSS No. 106 contains the same 64 percent of nominal internal hose diameter requirement, but applies it to hose of all sizes, not just hose with an internal hose diameter of ⅛ inch or 3⁄16 inch. Unlike SAE J1401, however, FMVSS No. 106 does not specify a test for determining hose's minimum pass-through diameter. In addition, FMVSS No. 106 explicitly excludes those portions of end fittings that do not contain hose from the constriction test while SAE J1401 does not. NHTSA welcomes comments on the issue of whether the constriction exclusion for portions of end fittings that do not contain hose is still necessary, or if there have been any substantial changes to brake systems which preclude the use of intentionally-restrictive end fittings.

NHTSA proposes retaining the existing constriction performance requirement in FMVSS No. 106 and adding a constriction test procedure. Two different constriction test procedures are available: the drop-ball test and the plug gauge test. In the drop-ball test, a steel ball with a diameter equal to the minimum constriction diameter for a particular hose size is dropped into one end of the hose at its fitting. Gravity is the only downward force acting on the ball, and friction between the hose and ball may not be sufficiently overcome in all tests.

As noted above, SAE J1401 specifies use of a plug gauge test. In the plug gauge test, a cylindrical plug with a small rod handle is inserted into and removed from the hose. NHTSA proposes specifying a plug gauge test because the agency tentatively concludes that the additional weight of the plug gauge may make it less susceptible to friction than the ball used in the drop-ball test. The plug gauge test that NHTSA is proposing, the details of which are contained in paragraph S6.12 of the Proposed Regulatory Text, differs somewhat from the plug gauge test specified in SAE J1401 in two respects. First, the spherical end of the plug gauge must be able to enter the hose or end fitting by applying a force no greater than gravity. Second, the plug gauge must fall under the force of gravity within 3 seconds. The agency welcomes comments both on its proposal to specify a plug gauge test instead of a drop-ball test and on the differences between the plug gauge test specified in SAE J1401 and the one the agency is proposing.

3. Volumetric Expansion

Both SAE J1401 and FMVSS No. 106 have similar requirements/procedures; however, SAE J1401 does not specify tests for hoses other than ⅛ or 3⁄16 inch. FMVSS No. 106 includes requirements for hoses smaller than ⅛ inch, larger than ¼ inch, and also for metric nominal hose sizes. NHTSA does not propose to make any changes to the volumetric expansion requirements/procedures in FMVSS No. 106.

4. Whip Resistance Test

The whip resistance requirements/procedures for hydraulic brake hose in SAE J1401 and FMVSS No. 106 are similar. Both SAE J1401 and FMVSS No. 106 specify that a hydraulic brake hose assembly shall not rupture when run continuously on a flexing machine for 35 hours. The test procedures differ, however, regarding the level of water pressure to be exerted in conducting the whip resistance test. While FMVSS No. 106 specifies a constant minimum water pressure of 235 psi during the test, SAE J1401 specifies a water pressure range of 225 to 250 psi. The agency does not propose any changes to Standard No. 106's existing test procedures for whip resistance because the existing specifications are so close to the upper pressure limit specified in SAE J1401.

5. Tensile Strength

FMVSS No. 106 specifies that a hose assembly shall have a minimum tensile strength of 325 pounds when pulled at a rate of 1 inch per minute. SAE J1401 includes this same specification, but also specifies an additional tensile strength of 370 pounds when pulled at a faster, 2 inches per minute, rate. Therefore, SAE J1401's test environment is more severe than that specified in FMVSS No. 106. NHTSA proposes that the SAE J1401 fast-pull test and 370 pound strength requirement be incorporated into FMVSS No. 106. The agency also proposes to update the ASTM reference for tension testing machines to the latest version of the standard practice.

6. Water Absorption and Pressure Test, Tensile Strength, and Whip Resistance

Both SAE J1401 and FMVSS No. 106 have identical specifications for the conditioning of the hose assembly in water for 70 hours, but the subsequent test conditions (which are also used for non-water conditioned hose) vary, given the aforementioned differences between

the pressure, tensile strength, and whip resistance requirements in SAE J1401 and FMVSS No. 106. NHTSA does not propose any changes to the existing water absorption requirements of FMVSS No. 106 but, as noted above, NHTSA does propose to incorporate SAE J1401's fast-pull test and 370-pound strength requirement into Standard No. 106's tensile strength test procedure. Accordingly, after being conditioned in water for 70 hours, hydraulic brake hose assembly would be required to meet these heightened tensile strength requirements.

7. Low Temperature Resistance Test

Both SAE J1401 and FMVSS No. 106 specify identical test procedures for bending brake hose around a test cylinder after conditioning at minus 40 degrees F. However, SAE J1401 does not include test cylinder dimensions for hoses with inside diameters other than ⅛ inch or 3⁄16 inch, while FMVSS No. 106 includes test cylinder dimensions applicable to all sizes of brake hose. NHTSA does not propose any changes in Standard No. 106's low temperature resistance requirements/procedures.

8. Brake Fluid Compatibility, Constriction, and Burst Strength

FMVSS No. 106 specifies that the hose be conditioned with SAE RM–66–05 Compatibility Fluid at 200 degrees F for 70 hours, and then subjected to constriction and burst strength tests. SAE J1401 specifies that the hose be conditioned using SAE RM–66–03 Compatibility Fluid at 248 +9 −0 degrees F for 70 to 72 hours prior to the constriction and burst strength tests. Thus, when compared to the test procedures specified in Standard No. 106, the SAE J1401 test is run at a higher temperature and uses the older SAE compatibility fluid. Because the RM–66–05 fluid has superceded the RM–66–03 fluid, NHTSA does not propose any change in the type of fluid specified for conditioning the hose. NHTSA does propose, however, to increase the conditioning temperature in FMVSS No. 106 to 248 degrees F.

9. Ozone Resistance

The test cylinder dimensional specifications in SAE J1401 and FMVSS No. 106 are the same, although the test procedures in FMVSS No. 106 account for hose that are not long enough to fit all the way around the test cylinder, while SAE J1401 provides test procedures for hose that exceed the test cylinder circumference and also for hose that collapse when subject to bending. SAE J1401 requires a higher concentration of ozone of 100 parts per million (ppm) compared to FMVSS No. 106, which requires a concentration of 50 ppm.

Both SAE J1401 and FMVSS No. 106 specify a conditioning temperature of 104 degrees F. In addition, both SAE 1401 and FMVSS No. 106 specify that the hose be subjected to ozone for at least 70 hours after which no visible cracks in the hose may be apparent when examined under 7-power magnification. Unlike FMVSS No. 106, however, SAE J1401 includes an additional dynamic ozone test, in which a cut length of hose is mounted in an environmental chamber, exposed to ozone at a 100 ppm concentration, and flexed on a specified apparatus through 3 inches of stroke at 0.3 Hz for 48 hours. SAE J1401 specifies that no cracking of the hose is permissible after 48 hours.

NHTSA proposes to upgrade FMVSS No. 106's ozone resistance requirements to incorporate the 100–ppm ozone concentration in SAE J1401. The agency also proposes to incorporate the dynamic ozone test in SAE J1401 into Standard No. 106. NHTSA tentatively concludes that such an upgrade is appropriate given the well-documented increase in ground-layer ozone formation and concentration in U.S. cities that has occurred since FMVSS No. 106 was first proposed in 1967. Requiring hydraulic brake hose to sustain increased ozone concentrations should more accurately reflect the present-day operating environments of brake hose and may prevent premature failure of the hose due to ozone exposure.

10. End Fitting Corrosion Resistance

Both SAE J1401 and FMVSS No. 106 specify exposing hydraulic brake hose end fittings to salt spray in a chamber for 24 hours. The salt spray chamber specified in FMVSS No. 106 is based on specifications outlined in ASTM B117–64, while the chamber specifications in SAE J1401 are based on ASTM B 117 Appendix B. NHTSA tentatively concludes these are different versions of the same ASTM Standard Practice B117, which has been revised over time. Instead of referencing either ASTM B117–64 or ASTM B 117 Appendix B, both of which are outdated, NHTSA proposes to change the reference in FMVSS No. 106 to the most recent set of ASTM specifications for salt spray chambers, which are found in ASTM B117–97.

Another difference between the end fitting corrosion resistance specifications in SAE J1401 and FMVSS No. 106 pertains to the mounting angle of the hose. SAE J1401 specifies that the hose shall be mounted at an angle between 15 and 30 degrees from vertical while FMVSS No. 106 specifies an angle of 30 degrees. Most of the end fitting corrosion resistance performance requirements in SAE J1401 and FMVSS No. 106 are similar or identical, with SAE J1401 typically providing tolerances on all parameters. SAE J1401 excludes brass end fittings from testing because apparently SAE deems those end fittings to have adequate corrosion resistance. While the two sets of performance requirements are very similar, Standard No. 106's requirements are somewhat more rigorous and inclusive. Accordingly, with the exception of updating the reference to the most recent set of ASTM specifications for salt spray chambers, NHTSA proposes no changes to the end fitting corrosion resistance requirements/procedures in FMVSS No. 106.

11. High Temperature Impulse Test

SAE J1401 specifies a hot impulse test in which a hose assembly is filled with brake fluid and subjected to 150 cycles of 1600 psi for one minute, then zero pressure for one minute, at an elevated temperature of 259 degrees F. After this test procedure, the hose assembly is cooled and subjected to a burst test with a specified minimum burst pressure of 5,000 psi. FMVSS No. 106 does not include a hot impulse test. Accordingly, NHTSA proposes incorporating the high temperature impulse test from SAE J1401 into FMVSS No. 106.

The table below summarizes the differences between the hydraulic brake hose requirements/procedures of FMVSS No. 106 and SAE J1401 and indicates which requirements/procedures NHTSA proposes incorporating into the standard.

TABLE 1.—COMPARISON OF HYDRAULIC BRAKE HOSE REQUIREMENTS IN FMVSS NO. 106 AND SAE J1401

Requirement/procedure		Existing FMVSS No. 106		SAE J1401
Hydraulic Brake Hoses ''x'' Indicates Requirements/Procedures Proposed To Be Included in FMVSS No. 106				
Pressure Test		5,000 psi burst strength specification, all hoses.	x	7,000 psi specified for ⅛ in. hose, same for 3⁄16 in. hose.
Constriction	1	Similar dimensional specifications	1	Similar, does not specify ¼ in. hose size.
Volumetric Expansion	x	Same		Same.
Whip Test	x	Same		Same.
Tensile Strength		Slow pull rate test	x	Includes slow plus fast pull rate tests.
Water Absorption and Pressure Test	x	Similar, note differences in pressure test		Similar.
Water Absorption and Tensile Strength		Similar, except fast pull rate test not included.	x	Similar, but includes fast pull rate.
Water Absorption and Whip Resistance	x	Similar		Similar.
Low Temperature Resistance Test	x	Same		Same, but does not cover all hose sizes.
Brake Fluid Compatibility, Constriction, and Burst Strength.		Lower conditioning temperature	x	Higher conditioning temperature, older version of test fluid (use RM–66–05 fluid).
Ozone Resistance		Similar, 50 ppm ozone concentration	x	Similar, 100 ppm ozone concentration.
Dynamic Ozone Test		Not included	x	Flex hose in ozone chamber for 48 hours.
End Fitting Corrosion Resistance	x	Similar, 30 degree mounting angle		Similar, 15–30 degree mounting angle, brass material exempt.
High Temperature Impulse Test		Not included	x	Pressure cycling at elevated temperature followed by burst test; does not cover ¼ in. brake hose.

Note 1: Use existing FMVSS No. 106 constriction requirement, propose that J1401 plug gauge test method be adopted in Test Procedure 106, add drop time.

B. Air Brake Hoses

NHTSA's performance requirements and test procedures relating to air brake hose are located in paragraph S7, *Requirements—Air brake hose, brake hose assemblies, and brake hose end fittings,* and paragraph S8, *Test procedures—Air brake hose, brake hose assemblies, and brake hose end fittings,* of FMVSS No. 106. The corresponding SAE requirements/procedures are contained in SAE Surface Vehicle Recommended Practice J1402, *Automotive Air Brake Hose and Hose Assemblies, Rev. June 1985* (SAE J1402).

NHTSA proposes to update FMVSS No. 106 to include performance requirements from SAE Recommended Practice J1402 that are not presently contained in the standard. The agency notes that, as was the case for hydraulic and vacuum brake hoses, air brake hose requirements as originally incorporated in Standard 106 in November of 1973 (38 FR 31302) were based on the substantive requirements in SAE J1402.

NHTSA tentatively concludes that virtually all air-braked vehicles are currently equipped with air brake hoses that meet SAE J1402 because many of these vehicles are used in commercial operations, and therefore are subject to the current FMCSA regulations requiring use of air brake hoses that comply with SAE J1402. While some vehicles equipped with air brake systems may not be operated as commercial vehicles, such as heavy-duty motor homes, the agency tentatively concludes that such vehicle populations are small in comparison to the number of straight trucks, tractors, and air-braked buses. NHTSA tentatively concludes that it is likely that the air brake hose, assemblies, and fittings on these non-commercial vehicles are already compliant with SAE 1402's specifications, however, because SAE 1402-compliant air brake hose products are the most widely available in the United States. Nevertheless, the agency welcomes comments on whether air brake hoses currently in use on commercial and non-commercial vehicles are designed to meet the specifications in SAE J1402.

A detailed discussion of the differences between the air brake hose, assemblies, and end fitting performance requirements and test procedures in SAE J1402 and FMVSS No. 106 follows, along with the agency's proposed resolution of those differences.

1. Dimensional Requirements

FMVSS No. 106 requires that hose constructed of synthetic or natural elastomeric rubber and intended for use with reusable end fittings must conform to the dimensional requirements listed in Table III of paragraph S7.1, *Construction.* Standardized dimensional requirements for hose with reusable end fittings guard against the possibility that replacement hose will not properly fit the end fittings. Table III lists required inside diameter (ID) and outside diameter (OD) dimensions for Type AI and Type AII air brake hose manufactured in fractional-inch sizes.

SAE J1402 includes the same dimensional requirements for AI and AII hose, but also includes dimensions for Type ''A'' hose. Type A air brake hose are primarily used with permanently attached end fittings, unlike Types AI and AII air brake hose, which are used with reusable end fittings. Some Type A hose, specifically ⅜ inch, 7⁄16 inch, and ½ inch ''Special'' hose, may also be fitted with reusable end fittings. SAE J1402's dimensional requirements apply to all Type A hose, regardless of whether they are fitted with permanent or reusable end fittings. With respect to the Type A ⅜-inch and Type A ½-inch ''Special'' hose, the agency notes that there are already corresponding dimensions included in Table III of FMVSS No. 106 with identical dimensions for both Type AI and Type AII hose. Under FMVSS No. 106, a ½-Special or ⅜ brake hose can be labeled to include the ''A,'' ''AI,'' and/or ''AII'' designations, or any combination thereof (*e.g.*, ''AI–AII''), as the hose manufacturer deems appropriate.

Although the petitioners did not specifically request the incorporation of SAE J1402's dimensional requirements for Type A air brake hose into FMVSS No. 106, the agency notes that it once considered whether to do so. In a June 28, 1974, final rule (39 FR 24012, Docket No. 1–5; Notice 11), the agency

decided against including dimensional requirements for Type A air hose in FMVSS No. 106. The agency stated that the primary purpose of the dimensional requirements was to prevent mismatch between reusable end fittings and replacement brake hose. At that time, hose used with permanent end fittings were generally assembled by high volume manufacturers rather than repair operations in the field. The agency did not believe that there was a safety need to provide dimensional requirements for hose assemblies manufactured in such a manner. Accordingly, NHTSA found that including dimensional requirements for air brake hose used with permanent end fittings would amount to ''a design restriction without corresponding safety benefit.''

NHTSA no longer believes that only high-volume brake hose manufacturers are assembling air brake hoses with permanently attached fittings. A review of brake hose manufacturers that are registered with NHTSA indicates that many truck repair facilities are registered, and the agency tentatively concludes that many of these facilities may be capable of assembling brake hoses with permanently attached end fittings as replacement parts. NHTSA does not know the extent to which air brake hose that meets SAE J1402 dimensional requirements for Type A hose is used in such replacement assemblies, but tentatively concludes it is likely that most, if not all, such hose already comply with SAE J1402's dimensional requirements because § 393.45 requires that hoses used on commercial motor vehicles comply with SAE 1402.

NHTSA is not proposing to incorporate into FMVSS No. 106 the dimensional requirements for rubber hose used with permanently attached end fittings found in Table A of SAE J1402. In the case of 7/16-inch hose, which is not currently listed in Table III of FMVSS No. 106, NHTSA proposes to add this hose size to the dimensional tables for Type I and Type II hose, which would have the effect that as indicated in SAE J1402, 7/16-inch hose could be used with either permanent or reusable fittings, as is the case for 3/8-inch and 1/2-inch Special hose as currently included in Table III of FMVSS No. 106. Hose manufacturers would then be able to label 7/16-inch hose with a designation of ''A,'' ''AI,'' and/or ''AII,'' as they deem appropriate. NHTSA welcomes public comments on this proposal, and also requests any dimensional and descriptive information for other sizes of air brake hose that manufacturers may be producing that is not covered under SAE J1402. NHTSA also welcomes public comments on whether FMVSS No. 106 should include dimensional requirements for metric sized hose used with reusable end fittings as Standard No. 106 currently does not provide requirements for such hose. Note that Standard No. 106 does include references to metric sizes of air brake hose that presumably is used with permanently-attached end fittings.

2. Construction and Labeling

Paragraphs S7.1, *Construction,* and S7.2, *Labeling,* both contain references to air brake hoses constructed of synthetic or natural elastomeric rubber to differentiate those hose types from air brake tubing constructed from nylon (plastic), with both rubber hose and nylon tubing currently regulated as air brake hoses under paragraphs S7 and S8. The designation for synthetic or natural elastomeric rubber hoses was added to FMVSS No. 106 in a 1991 final rule (56 FR 7589) so that the dimensions for hoses used with reusable fittings in Table III would not apply to plastic tubing. NHTSA proposes, as discussed in another section below, that plastic air brake tubing be regulated in its own section in FMVSS No. 106 since it differs significantly in construction and material properties from elastomeric rubber hoses. Therefore, NHTSA proposes that any references to synthetic or natural elastomeric rubber be deleted from S7 of FMVSS No. 106 since it will no longer be necessary to differentiate rubber hoses from plastic tubing in S7 and S8. The proposed text in this notice also removes references to ''outside diameter (OD)'' from S7 and S8 of FMVSS No. 106 since OD measurements are generally only applicable to tubing, which NHTSA proposes to address in the new section for plastic tubing.

NHTSA also proposes to specify in S7.2.1(e) of FMVSS No. 106 the labeling scheme that is to be used for air brake hose that meet the dimensional requirements of more than one type of end fitting (A, AI, or AII). The proper labeling of such hose has been addressed in several of the agency's legal interpretation letters and inserting this language in FMVSS No. 106 would serve to minimize confusion on this issue. The proposed text also states that a hose intended for use with more than one type of end fitting may be labeled as such, but is not required to be so labeled. This provides flexibility for hose manufacturers to determine how they intend for their hoses to be used, and would not require them to label hoses for multiple end fitting designations unless they so desire.

3. Manufacturer Identification

While the labeling requirements in FMVSS No. 106 and SAE J1402 differ somewhat, both can be accommodated on a single brake hose. SAE J1402 requires each manufacturer to register the identification of its yarn scheme in accordance with SAE J1401, Appendix B and to label each hose with its manufacturer's identification number. Similarly, FMVSS No. 106 requires that hose manufacturers register with NHTSA and imprint their name or symbol on subject hoses and/or fittings. The agency does not propose to change FMVSS No. 106's manufacturer identification or labeling requirements.

4. Constriction

The constriction requirements relating to air brake hose are found in paragraph S7.3.1 of FMVSS No. 106. Standard No. 106 requires that every inside diameter of any section of each air brake hose assembly shall be not less than 66 percent of the nominal inside diameter of the hose, except for those portions of end fittings that do not contain hose. SAE J1402 also requires air brake hose assembly to meet a 66 percent of nominal inside diameter requirement but, unlike FMVSS No. 106, it does not exclude the portions of end fittings not containing hose. NHTSA proposes to eliminate the exclusion in S7.3.1 for those portions of end fittings which do not contain hose, as the agency does not believe that end fittings for air brake hose include restrictions designed into the fittings, nor are there complex shapes for end fittings as found with some hydraulic brake hoses. NHTSA welcomes public comments on this proposal. NHTSA also proposes that the same test method proposed for testing hydraulic brake hoses for constriction be specified for testing air brake hoses. In addition, noting that the title of paragraph S7.3.1 contains a typographical error, NHTSA proposes to change the title of S7.3.1 from ''Construction'' to ''Constriction.''

5. High Temperature Resistance

FMVSS No. 106 includes a test in which the hose is bent around a test cylinder, conditioned at 212 degrees F for 70 hours, then cooled and straightened. No charring, disintegration, or cracks are permitted. The high temperature test specifications for air brake hose contained in SAE J1402 are similar, but not identical, to those in FMVSS. First, the radii of the test cylinders specified for each hose size are significantly smaller in SAE J1402 than in FMVSS No. 106. Second, unlike FMVSS No. 106, SAE J1402 does

not include test cylinder radii specifications for ⅛-inch ID hose. Third, SAE J1402 does not provide specifications for metric sized hose. Instead, the SAE specification provides only metric conversions for inch sizes of hose. Fourth, unlike FMVSS No. 106, SAE J1402 excludes hose with fabric covering from external inspection for cracks, stating that visual inspection is not practical.

NHTSA proposes that FMVSS No. 106 adopt the smaller radii test cylinders from SAE J1402 and, for ⅛-inch and 3 mm, 4 mm, and 5 mm hose, NHTSA proposes that the test cylinder radius of 1 inch as specified in SAE J1402 for 3⁄16-inch hose also be used for these hose sizes. As currently indicated in Table IV of FMVSS No. 106, the larger metric sizes of hose (6 mm and above) numerically correspond closely to inch sizes of hose, for example, 6 mm (0.236 inch) is very close to ¼ inch (0.250 inch). Accordingly, NHTSA proposes to apply the test cylinder values from SAE J1402 to metric sizes of hose as currently specified in Table IV of FMVSS No. 106. As to SAE J1402's exclusion of fabric-covered air brake hose from the external inspection requirement, NHTSA disagrees that external inspection of such hose is impractical and, therefore, does not propose to incorporate SAE J1402's exclusion.

6. Low Temperature Resistance

FMVSS No. 106 specifies that the hose and test cylinder be conditioned at minus 40 degrees F for 70 hours, followed by bending the hose 180 degrees around the test cylinder. No cracks may be visible on the outside cover of the hose after performing this test. The test procedure in SAE J1402 is similar, including the radii of the test cylinders, except that it does not specify test cylinder radii for ⅛ inch or 3mm hose. SAE J1402 also prohibits cracks on the inside of the hose and, in this respect, the SAE test is more severe than the one specified by FMVSS No. 106. Unlike FMVSS No. 106, however, SAE J1402 excludes the exterior surface of hoses covered with fabric from external inspection.

The agency indicated in a February 26, 1974 final rule (39 FR 7425, Docket No. 1–5, Notice 10) amending FMVSS No. 106 that it would consider specifying inspection of the inner layer of an air brake hose subjected to the low-temperature resistance test at a future date. In addition, the agency notes that the test procedure for Standard No. 106, TP–106, specifies that the same test procedure be used for air brake hose as for hydraulic brake hose, using the test cylinders sized for air brake hose, and does include internal inspection of both types of hoses. NHTSA is now proposing that the internal surface inspection of air brake hose, as specified in SAE J1402, be incorporated into FMVSS No. 106. The agency does not propose, however, to incorporate SAE J1402's exclusion of fabric-covered air brake hose from external inspection.

7. Oil Resistance

Paragraphs S7.3.4, *Oil resistance,* and S8.3, *Oil resistance test,* of FMVSS No. 106 specify that specimens prepared from the inner tube and outer cover of the subject brake hose, when immersed in American Society of Testing and Materials (ASTM) No. 3 oil for 70 hours at 212 degrees F, shall not increase in volume by more than 100 percent. SAE J1402 contains an identical test procedure. As indicated in ASTM D147–98e1, *Standard Test Method for Rubber Property—Effect of Liquids,* ASTM No. 3 oil is no longer commercially available and has been superseded by IRM 903 oil. Accordingly, NHTSA proposes that all references in S7.3.4 and S8.3 to ASTM No. 3 oil be changed to specify IRM 903 oil. The agency does not propose any additional changes to FMVSS No. 106's oil resistance requirements/specifications.

8. Ozone Resistance

FMVSS No. 106's ozone resistance requirements/specifications for air brake hose are the same as those specified for hydraulic brake hose. Standard No. 106 specifies that air brake hose be conditioned in an ozone chamber for 70 hours at 104 degrees F while the hose is secured around a test cylinder. Because the test procedure for air brake hose, S8.4 (*Ozone resistance test*), specifies that the same test procedure for a hydraulic brake hose ozone resistance test be utilized, and because NHTSA is proposing that the ozone concentration for hydraulic brake hose be changed from 50 ppm to 100 ppm, NHTSA proposes to specify the higher ozone concentration (100 ppm) for air brake hose as well. The agency tentatively concludes it is appropriate to specify the same concentration of ozone for testing all types of brake hoses and welcomes public comments on this issue.

9. Length Change

Paragraph S7.3.6, *Length change,* of FMVSS No. 106 requires that air brake hose, when subjected to 200 psi of air pressure, shall not contract more than 7 percent nor elongate more than 5 percent over the length of the hose. The associated test procedure, found in paragraph S8.5, *Length change test,* specifies that the initial length of the hose be measured at a pressure of 10 psi. Coiled nylon tube may alternatively comply with requirements in FMCSR 393.45 (which references J844 for nylon air brake tubing). SAE J1402's length change requirements/procedures are identical to those in FMVSS No. 106. Considering that FMCSA and NHTSA are proposing to consolidate all federal brake hose requirements/procedures into FMVSS No. 106 and because NHTSA is proposing specific requirements/procedures for plastic air brake tubing, the agency proposes to delete the option for coiled nylon tube to comply with FMCSR 393.45 from Standard No. 106. Aside from deleting this reference, the agency does not propose any additional changes to the length change requirements/procedures in FMVSS No. 106.

10. Adhesion

FMVSS No. 106 requires a minimum separation strength of 8 pounds per linear inch for each layer in an air brake hose, except for hose reinforced by wire. SAE J1402 has a similar requirement for non-wire reinforced hose, and a separate test procedure for wire reinforced hose, in which a steel ball is placed inside the hose sample, one end is capped and the other connected to a vacuum source, and the hose is bent 180 degrees around a test cylinder in one direction and then the opposite direction. While still under vacuum, the hose is straightened and the steel ball must be able to roll from one end of the hose to the other. NHTSA proposes to incorporate the SAE J1402 adhesion test for wire-reinforced air brake hose into FMVSS No. 106, with the exception of the steel ball sizes as discussed below.

The table of steel ball sizes for this test procedure in SAE J1402 indicates that for all but the 13⁄32-inch hose sizes, the ball diameter is equal to 75 percent of the nominal hose ID. For the 13⁄32-inch hose size, the specified ball diameter is 73 percent of the nominal hose ID. It appears that the reason for this one difference is that the ball sizes in the table are standard size steel balls measured in 64ths of an inch, thus 75 percent of 13⁄32-inch is slightly larger than 19⁄64-inch and 73 percent of 13⁄32 equals 19⁄64-inch. The table in SAE J1402 also does not provide corresponding steel ball sizes for metric sized hose. Accordingly, to incorporate SAE J1402's specifications into FMVSS No. 106, NHTSA proposes that rather than specifying steel ball diameters for each hose size, the steel ball should be

specified as having a diameter that is 75 percent of the nominal inside diameter of the hose. This would allow for testing of any and all sizes of hose. NHTSA welcomes public comments on this issue.

The agency notes that it is proposing to specify use of a plug gauge rather than a steel ball for constriction testing of other types of hose to which FMVSS No. 106 applies. For the adhesion test, however, it would not be possible to use a plug gauge because the hose is closed off at both ends during the test. Accordingly, NHTSA proposes to specify the use of a steel ball to test air brake hose for adhesion. Finally, the agency proposes to update the ASTM tension testing machine reference in S8.9 from the 1964 version currently in FMVSS No. 106 to the latest revision of that standard, *Standard Practices for Force Verification of Testing Machines,* Designation E4–99.

11. Air Pressure (Leakage)

FMVSS No. 106 specifies that an air brake hose assembly be subjected to a 200-psi pressure test. Once the target pressure is reached, the hose is sealed and the pressure drop over a five-minute period may not exceed 5 psi.

SAE J1402 has two test procedures to evaluate the leakage from air hose assemblies. In the first test, two hose assemblies are tested as follows. One hose assembly is subjected to the high temperature resistance test described above, and is then subjected to a 300-psi pressure test using air or nitrogen, under water, with no visible leakage for 30 seconds. The second hose assembly is subjected to the low temperature resistance test described above, and is then subjected to a 300-psi pressure test using air or nitrogen, under water, with no visible leakage for 30 seconds.

In the second test, a flexure test is performed as follows. A test hose assembly is prepared to the length shown in Figure 2 of that standard. The hose is preconditioned by exposure to a salt spray for 24 hours with the ends sealed, followed by high-temperature aging at 212 degrees F for 70 hours with the ends open and, within 168 hours of completion of the preconditioning, the hose is subjected to the flex test. The hose is mounted on the flex test fixture as described in Figure 2, with the hose being subjected to a 6-inch stroke while the air pressure in the hose is cycled between 0 psi for one minute and 150 psi for one minute. With the flexure machine stroking at 100 cycles per minute, the hose is subjected to 1 million stroke cycles. Upon completion of the 1 million cycles, the hose must be capable of maintaining 150-psi ±10 psi when air is supplied through a 1/16-inch diameter orifice.

The SAE J1402 specifications for hose leakage are more severe than those presently in FMVSS No. 106, and NHTSA proposes incorporating them into Standard 106, with the following modifications. SAE J1402 specifies that upon completion of the high-temperature aging test, the hose assembly must be flex tested within 168 hours. NHTSA tentatively concludes there could be variability introduced in the test results if, for example, the hose was immediately flex tested after the high-temperature test, or if the hose were allowed to cool before being flex tested. Therefore, NHTSA proposes that upon completion of the high-temperature aging test, the hose assembly be cooled at room temperature for two hours, and the flex test then be initiated within 166 hours from that time.

NHTSA also proposes to modify SAE J1402's testing procedures by specifying the thickness of the orifice during the final leak check because the thickness of the orifice, and not only the diameter of the orifice, affects the rate at which air can be supplied to the hose. This would be critical if a small amount of hose leakage is present during the final leakage test. NHTSA proposes specifying an orifice thickness of 0.032 inches (1/32-inch), which is the same thickness specified for the orifice in FMVSS No. 121 S5.3.5, *Control signal pressure differential for converter dollies and trailers designed to tow another vehicle equipped with air brakes.* NHTSA tentatively concludes that this proposed orifice dimension would supply air at a greater rate than any thicker orifice while still providing sufficient mechanical strength to withstand the test conditions. NHTSA welcomes comments on this proposal.

With respect to the amount of leakage that is permitted after the flex test is conducted, SAE J1402 is not absolutely specific. SAE J1402 defines failure as the hose's inability to be repressurized to 150-psi ±10 psi, supplied through the 0.062-inch orifice, within 2 minutes. SAE J1402 specifies that the supply air pressure to the orifice is 150 psi ±10 psi. Accordingly, a hose supplied with up to 160-psi supply air pressure and resulting in 140-psi pressure in the hose assembly could conceivably be construed as passing the test. On the other hand, the specifications could be construed as permitting no leakage, that the pressure in the hose assembly must equal the supply pressure, within a range of 140 psi to 160 psi. If that were the case, however, there would be no need for an orifice to be included in the test apparatus.

NHTSA proposes to specify a supply pressure of 150 psi and to further specify that the pressure in the hose assembly must reach 140 psi within 2 minutes. NHTSA notes that this is consistent with the existing requirements in FMVSS No. 106, S7.3.8 *Air pressure,* which permits a small amount of leakage in an air brake hose assembly, albeit without prior conditioning. NHTSA welcomes comments on these proposed leakage specifications.

12. Burst Strength

FMVSS No. 106 requires that an air brake hose assembly shall not rupture when subjected to a hydrostatic pressure of 800 psi. SAE J1402 specifies that a hose assembly be first subjected to a 24-hour salt spray test, with no resulting corrosion other than as permitted by that standard, and then shall not burst or separate from an end fitting at a hydrostatic pressure of 900 psi. SAE J1402's burst strength specifications/requirements are more severe than those in FMVSS No. 106. NHTSA proposes to incorporate SAE J1402's burst strength specifications/requirements into Standard No. 106.

13. Tensile Strength

FMVSS No. 106 specifies that a hose assembly for use between either the frame and the axle or between a towed and towing vehicle meet a longitudinal pull test, at a 1 inch per minute force application rate, and not separate from its end fittings at the following force levels: 250 pounds for 1/4 inch or less, or 6mm or less, nominal ID; 325 pounds for more than 1/4 inch or 6mm nominal ID. A hose assembly used in any other application must withstand force levels of: 50 pounds for 1/4 in or less (or 6 mm or less) nominal ID; 150 pounds for 3/8 inch, 1/2 inch, or 10 mm to 12 mm, nominal ID; and 325 pounds if the hose assembly is larger than 1/2 inch (or 12 mm) nominal ID. A coiled nylon tube assembly can either meet these requirements or, alternatively, can meet the requirements in FMCSR § 393.45.

The distinction between a brake hose used between a frame and axle or between a towed and towing unit, and hose used for other purposes, was added to Standard No. 106 on February 26, 1974 (39 FR 7425), in response to petitions for reconsideration of certain brake hose requirements. This distinction was introduced in response to the inclusion of plastic tubing as an air brake hose, and permitted lower tensile strength requirements for plastic tubing used in chassis applications.

Because the agency is now proposing separate requirements for plastic tubing in a new section of FMVSS No. 106, NHTSA proposes to delete the lower tensile strength limits for hose that are used for purposes other than connections between a frame and axle or between a towed and towing unit.

The agency proposes that all rubber brake hose meet the requirements for hose that is used between a frame and axle or between a towed and towing unit. NHTSA tentatively concludes that rubber hoses are no longer used extensively for other purposes on heavy vehicles, as plastic tubing is used for most chassis plumbing of air systems. An example of a chassis plumbing use for rubber hose is to connect an air dryer to the wet tank, although here again many vehicles use plastic tubing in this application. NHTSA tentatively concludes that these rubber hoses are of sufficient diameter to have the mechanical strength to meet the higher, frame-to-axle tensile strength requirements. These requirements are similar to the ones originally proposed for FMVSS No. 106 prior to the accommodation of plastic tubing strength requirements. In addition, these tensile strength requirements are currently specified in SAE J1402, which does not distinguish based on the application of the hose and includes the higher force specification. SAE J1402 does not specify a stand-alone tensile strength test, but does specify a water absorption test followed by a tensile strength test, described below. NHTSA welcomes comments on the proposed tensile strength requirements and information on any alternate tensile strength requirements that might be appropriate for rubber hose.

NHTSA also proposes to delete the reference to FMCSR § 393.45 in paragraph S7.3.10 because NHTSA is proposing to incorporate into FMVSS No. 106 many of the SAE requirements referenced in § 393.45 for plastic air brake tubing.

14. Water Absorption and Tensile Strength

FMVSS No. 106 specifies that a hose assembly be immersed in distilled water for 70 hours at room temperature and, within 30 minutes of being removed from the water, be subjected to the tensile strength test and requirements described above. A coiled nylon tube assembly can either meet these specifications/requirements or, alternatively, the requirements in FMCSR § 393.45.

SAE J1402 specifies bending a hose assembly around a test cylinder and, with its ends capped, immersed in tap water at room temperature for 168 hours. Following this, the hose assembly is subjected to a tensile pull test, with the following force levels specified to be achieved without separation or rupture: 250 pounds for hose of ¼ inch, or 6.4 mm, or less, nominal ID; 325 pounds for hose larger than ¼ inch or 6.4 mm. Thus, the tensile strength required in SAE J1402 is similar to that in FMVSS No. 106 for a hose used between a frame and axle, or between a towed and towing vehicle. SAE J1402 does not, however, include lower tensile strength values for hoses that are used between components that do not experience substantial relative motion and it also does not address plastic tubing.

Although the SAE J1402 test specifies a longer water conditioning period than FMVSS No. 106, which would make those specifications more severe, FMVSS No. 106 specifies that the ends of the hose assembly be left open thereby exposing the inside of the hose to water. SAE J1402 also specifies that tap water rather than distilled water (as specified in FMVSS No. 106) be used in this test, which could introduce variability in test results depending on compounds that are in the tap water at any particular location. On balance, it would be difficult to state which test condition is more severe, but NHTSA proposes that the current requirements in paragraph S7.3.11, *Water absorption and tensile strength,* be retained, except as modified by proposed changes to the stand-alone tensile strength requirements discussed above. NHTSA also proposes to delete the reference to FMCSR § 393.45 in S7.3.11.

15. Zinc Chloride Resistance

Paragraph S7.3.12, *Zinc chloride resistance,* of FMVSS No. 106 requires that a hose assembly be immersed in a 50 percent zinc chloride aqueous solution for 200 hours, with no visible cracks permitted when viewed with 7 power magnification. SAE J1402 does not include a similar requirement. NHTSA does not propose any changes in Standard No. 106's zinc chloride resistance requirements.

16. End Fitting Corrosion Resistance

FMVSS No. 106 requires that air brake hose end fittings meet the same requirements as those specified for hydraulic brake hose end fittings. As is the case for hydraulic brake hoses per SAE J1401, SAE J1402 references the ASTM B117 Method of Salt Spray (Fog) Testing while FMVSS No. 106 references ASTM B117–64. Unlike SAE J1401, SAE J1402 does not exclude brass end fittings from this requirement. While SAE J1402 does not specify the attitude of the brake hose assembly in the chamber, FMVSS No. 106 specifies a 30-degree from vertical angle. Because FMVSS No. 106's end fitting corrosion resistance requirements appear to be more rigorous, NHTSA does not propose any changes to these requirements.

17. Minimum Bend Radius

SAE J1402 specifies minimum bend radius requirements for hose as installed on a vehicle. NHTSA tentatively concludes it would not be appropriate to add these requirements to FMVSS No. 106 because FMVSS No. 106 regulates the properties of brake hoses as stand-alone motor vehicle equipment rather than use requirements.

The table below summarizes the differences between the air brake hose requirements/procedures of FMVSS No. 106 and SAE J1402 and indicates which requirements/procedures NHTSA proposes incorporating into the standard.

TABLE 2.—COMPARISON OF AIR BRAKE HOSE REQUIREMENTS/PROCEDURES IN FMVSS NO. 106 AND SAE J1402

Requirement/procedure		Existing FMVSS No. 106		SAE J1402
Air Brake Hoses				
"x" Indicates Requirements/Procedures Proposed To Be Included in FMVSS No. 106				
Dimensional Specifications	x	Similar, does not include Type A hose		Similar, but includes Type A hose.
Constriction	x	Similar, includes end fittings		Similar but does not include end fittings.
High Temperature Resistance		Similar, but larger test cylinder radii	x	Similar, but smaller test cylinder radii.

TABLE 2.—COMPARISON OF AIR BRAKE HOSE REQUIREMENTS/PROCEDURES IN FMVSS NO. 106 AND SAE J1402—Continued

Requirement/procedure		Existing FMVSS No. 106		SAE J1402
Low Temperature Resistance	1	Similar, excludes interior of hose from inspection.	1	Similar, requires internal inspection, excludes fabric covered hose exterior inspection.
Oil Resistance	x	Same		Same.
Length Change	x	Same; coiled nylon can meet FMCSR § 393.45.		Same.
Adhesion		Same except for wire reinforced hose	x	Same but includes specific test for wire reinforced hose.
Air Pressure (Leakage)		200 psi leak test	x	More test specifications including dynamic flex test.
Burst Strength		800 psi hydrostatic test	x	Salt spray test followed by 900 psi hydrostatic test.
Tensile Strength	x	Specifies longitudinal pull test		No corresponding, stand-alone test. Specifications are in Water Absorption test.
Water Absorption and Tensile Strength	x	70 hour water immersion followed by pull test; coiled.		168 hour water immersion followed by pull test.
Tensile Strength		Nylon can meet FMCSR 393.45		Followed by pull test.
Zinc Chloride Resistance	x	200 hour immersion in zinc chloride		No corresponding test.
End Fitting Corrosion Resistance	x	Similar, specifies angle of hose in test chamber.		Similar, does not specify angle of hose in test chamber.
Ozone Test		No ozone test	2	Hose bent around test cylinder exposed to 50 ppm ozone for 70 hours.
Minimum Bend Radius		None	3	Specifies minimum bend radii for hose as installed on a vehicle.

Note 1: for low temperature resistance, use the most severe requirements from each standard.
Note 2: propose J1402 test, except with 100-ppm ozone concentration.
Note 3: would not be appropriate for FMVSS No. 106.

C. Vacuum Brake Hoses

NHTSA's performance requirements and test procedures relating to vacuum brake hoses are located in paragraph S9., *Requirements—Vacuum brake hose, brake hose assemblies, and brake hose end fittings,* and paragraph S10., *Test procedures—Vacuum brake hose, brake hose assemblies, and brake hose end fittings,* of FMVSS No. 106. The corresponding SAE requirements are contained in SAE Highway Vehicle Standard J1403, *Vacuum Brake Hose, Rev. July 1989.*

When requirements for vacuum brake hoses were originally added to FMVSS No. 106 in November of 1973 (38 FR 31302), the substantive requirements of SAE J1403 were adopted. NHTSA proposes to update FMVSS No. 106 to include performance requirements from the most recent version of SAE J1403 that are not presently contained in the standard.

Again, as with hydraulic brake hoses, the agency tentatively concludes that many light vehicle manufacturers already voluntarily equip their vehicles with vacuum hoses that meet the current version of SAE J1403. Accordingly, NHTSA proposes applying the SAE specifications to all types of vacuum hoses and not just those used on commercial vehicles. The proposed amendments to FMVSS No. 106 represent incrementally more severe performance requirements that the industry has adopted over the past 20 years.

The petitioners requested that the requirements of SAE J1403 be added to FMVSS No. 106 to upgrade the performance requirements for vacuum brake hose. The use of vacuum brake hose in automotive applications is generally for the vacuum hose connecting the power brake booster to the engine manifold, and although there may be other applications for vacuum brake hose, the agency tentatively concludes that vacuum-operated braking systems are no longer being used in the U.S. Although the use of this type of brake hose may be far more limited than it was 40 or 50 years ago, NHTSA tentatively concludes that upgrading the requirements for vacuum brake hose is still warranted given that use of such hose is still widespread.

A detailed discussion of the differences between the vacuum brake hose performance requirements and test procedures in SAE J1403 and FMVSS No. 106 follows, along with the agency's proposed resolution of those differences.

1. Constriction

Paragraph S9.2.1, *Constriction,* of FMVSS No. 106 requires the inside diameter of a heavy duty vacuum hose assembly to be at least 75 percent of the hose's nominal inside diameter. The inside diameter of a light duty vacuum hose assembly is required, by S9.2.1, to be at least 70 percent of the hose's nominal inside diameter. FMVSS No. 106 excludes from these performance requirements those portions of the hose's end fittings that do not contain hose. Constriction testing, as outlined in Testing Procedure 106–08 (TP–106–08), is performed using plug gauges with diameters as specified in TP–106–08.

SAE J1403 does not contain a corresponding set of constriction test requirements/procedures. Accordingly, NHTSA does not propose any changes to Standard No. 106's constriction requirements/procedures for vacuum brake hose. NHTSA does seek public comments, however, on whether to continue to exclude those portions of end fittings that do not contain hose from the standard's constriction requirements.

2. High Temperature Resistance

Paragraph S9.2.2, *High temperature resistance,* of FMVSS No. 106 specifies bending a length of hose around a cylinder of specified diameter and exposing it to air at a temperature of 212 degrees F for 70 hours. After conditioning the hose in this manner, Standard No. 106 specifies that the hose be straightened and cut longitudinally and visually inspected. No visible cracking, charring, or disintegration on the exterior or interior of the hose is permitted.

SAE J1403 has a different test procedure in which a straight length of hose is subjected to a vacuum and conditioned at 257 degrees F for 96 hours. After temperature conditioning, the hose is cooled and bent around a test cylinder, then visibly inspected for degradation. The hose is then subjected to a proof pressure test of 175 psi for one minute. Required performance measures include: not more than 10 percent collapse of the outside diameter (OD) for heavy-wall hose and not more than 15 percent collapse of the OD for light-wall hose after the hot aging test; no visible internal or external embrittlement or degradation; and no leakage during the high-pressure test.

While FMVSS No. 106 specifies test cylinder radii for given sizes of hose (Table V), SAE J1403 simply specifies a test cylinder that is five times the OD of the hose. These test cylinder dimensions cannot be compared based on information in the standards because FMVSS No. 106 does not indicate the OD of the hose.

Nevertheless, the high temperature resistance requirements in SAE J1403 appear to be more rigorous than those in FMVSS No. 106 given that standard's post-test dimensional and burst test specifications. Accordingly, NHTSA proposes to incorporate SAE J1403's high temperature resistance requirements/specifications for vacuum brake hose into FMVSS No. 106.

3. Low Temperature Resistance

Paragraph S9.2.3, *Low temperature resistance*, of FMVSS No. 106 specifies conditioning vacuum brake hose, in a straight configuration, at minus 40 degrees F for 70 hours and then, while still cold, bending the hose 180 degrees around a test cylinder with a radius specified in Table V. After performing this test, S9.2.3 specifies visual inspection of the hose. No visible cracks on the hose are permitted. SAE J1403 has similar provisions, except that after the cold bending test is performed, SAE J1403 specifies subjecting the hose to a 175-psi pressure test at room temperature with no leakage permitted. SAE J1403's low temperature resistance requirements are more rigorous due to the addition of this pressure test. Accordingly, NHTSA proposes to incorporate SAE J1403's pressure test procedure into FMVSS No. 106.

4. Ozone Resistance

Paragraph S9.2.4, *Ozone resistance*, of FMVSS No. 106 specifies subjecting vacuum brake hose to an ozone concentration of 50 ppm for 70 hours. After performing the test, the hose, when visually inspected under 7 power magnification, must reveal no visible cracks. The ozone resistance specifications in SAE J1403 are similar but SAE J1403 specifies an ozone concentration of 100 ppm rather than 50 ppm. The agency tentatively concludes it is appropriate to update the ozone resistance specifications for vacuum brake hose, as it proposes to do for other types of brake hoses. Accordingly, NHTSA proposes to incorporate SAE J1403's 100-ppm ozone concentration specification into FMVSS No. 106.

5. Burst Strength

The burst strength requirements in FMVSS No. 106 and SAE J1403 are nearly identical. Both standards specify a hydrostatic burst test at 350 psi with no hose rupturing allowed under FMVSS No. 106 and no leakage or bursting allowed under SAE J1403. Given the similarities in the two standards, NHTSA does not propose any changes to the vacuum brake hose burst strength requirements/procedures in FMVSS No. 106.

6. Vacuum Deformation

Paragraph S9.2.6, *Vacuum*, of FMVSS No. 106 requires that a vacuum brake hose, when subjected to 26 inches of Hg. for 5 minutes, not collapse more than 1/16-inch as measured on the hose's outside diameter. SAE J1403 does not contain a corresponding, stand-alone test specification, although the collapse of hose as a percentage of OD is measured after performing the high temperature vacuum aging test described above. NHTSA does not propose any changes to the vacuum deformation requirements/procedures in FMVSS No. 106.

7. Bend Test

FMVSS No. 106 requires that a specified length of hose be bent until the ends are touching, with a maximum permissible outside diameter (OD) collapse specified in fractional inches. SAE J1403 has a similar requirement, although the maximum permissible collapse is specified as a percentage of the un-bent OD (*e.g.*, 20 percent, 30 percent). It is difficult to compare the two requirements/procedures because the values presented in Standard No. 106 are not expressed in terms of OD measurement and, therefore, a percentage calculation cannot be made. One difference between the two standards is that SAE J1403 excludes preformed hoses molded to fit specific applications in which no significant additional bending occurs when the hose is installed on a vehicle. Based on the information provided in each standard, it does not appear that either set of requirements/procedures is more stringent than the other. Accordingly, NHTSA does not propose any changes to the bending requirements/procedures in FMVSS No. 106. The agency does propose, however, to incorporate SAE J1403's exclusion of preformed hose and welcomes public comments on this issue.

8. Swell (Fuel Resistance)

FMVSS No. 106 specifies that a brake hose specimen be filled with ASTM Reference Fuel A and conditioned for 48 hours, after which the inside diameter (ID) of the hose is required to be at least 75 percent of nominal ID for heavy-duty hose and 70 percent of nominal ID for light-duty hose. Standard No. 106 specifies use of a plug gauge to measure the hose's inside diameter. Following the swell test, FMVSS No. 106 specifies subjecting the hose to 26 inches of Hg for ten minutes. The hose must then be examined to determine that no leakage or separation of the inner tube from the fabric reinforcement of the hose has occurred.

SAE J1403's swell test requirements/procedures are similar, but not identical. First, SAE J1403 specifies use of Reference Fuel B rather than Reference Fuel A. Second, SAE J1403 specifies that the hose's inside diameter be measured with a drop ball rather than a plug gauge. Third, SAE J1403 specifies a 10-minute vacuum test, followed by a layer adhesion test with an 8 pounds-per-inch minimum separation specification. In contrast, FMVSS No. 106 specifies that the hose show no leakage or separation of the inner tube from the fabric reinforcement of the hose while the 10-minute vacuum test is being performed.

With respect to the difference in specified fuels, as described in ASTM D471–98e1, *Standard Test Method for Rubber Property—Effect of Liquids,* Reference Fuel A is composed of 100 percent isooctane and Reference Fuel B is composed of 70 percent isooctane and 30 percent toluene by volume. Note 2 in the test method states that:

> The ASTM reference fuels in Table 3 have been selected to provide the maximum and minimum swelling effects produced by commercial gasolines. Reference Fuel A has a mild action on rubber vulcanizates and produces results of the same order as low swelling gasolines of the highly paraffinic, straight run type. Reference Fuels B, C [isooctance 50 percent, toluene 50 percent], and D [isooctane 60 percent, toluene 40 percent] simulate the swelling behaviour of the majority of commercial gasolines, with Reference Fuel C producing the highest swelling which is typical of highly aromatic premium grades of automotive gasoline.

NHTSA proposes that Reference Fuel B as specified in SAE J1403 be used for the swell test in FMVSS No. 106. While this fuel would increase the severity of the test, it would not be so severe as using one of the other reference fuels that contain higher concentrations of toluene, nor as severe as some of the other reference fuels that represent ethanol or methanol blends of gasoline (gasohol).

With respect to the difference in measuring instruments used to determine the hose's inside diameter, NHTSA favors use of a plug gauge because plug gauges are somewhat less susceptible to friction than steel drop-balls. Accordingly, NHTSA proposes that the plug gauge method be kept in place in TP–106 for swell testing of vacuum brake hoses, but welcomes comments on the merits of each constriction test procedure as it applies to vacuum brake hose.

Regarding the differences in adhesion testing between the NHTSA and SAE standards during or after the vacuum test, NHTSA tentatively concludes that each standard has its benefits and drawbacks. While the visual check for hose collapse in FMVSS No. 106 is valid for cases in which the entire hose integrity has been compromised during the fuel soak, it is not clear that this visual check would be able to detect separation of multi-layer hose materials if collapse occurs only on the inside tube or layer. On the other hand, the SAE J1403 layer adhesion test does not include a specification that the hose not visibly collapse during the vacuum test. Visible collapse of the hose during the vacuum test indicates a loss of hose integrity, even if the hose layers remain well bonded.

NHTSA proposes that the specifications of these two standards be combined as follows. Following the fuel conditioning using Reference Fuel B and the constriction test, each vacuum hose would be subjected to a vacuum of 26 inches of Hg for ten minutes, with no visible collapse or leakage of the hose permitted (as currently specified by FMVSS No. 106). Then, for hoses constructed of two layers or more, a layer adhesion test would be conducted with a specified performance of 8 pounds-per-inch minimum separation force (as specified by SAE J1403). NHTSA proposes that this adhesion test only be applied to multi-layer hoses for two reasons. First, the agency tentatively concludes that single layer hose cannot be tested easily. Second, NHTSA tentatively concludes that single layer hose that have lost mechanical integrity would not be able to pass the visual collapse or no leakage specification during the vacuum test and, as such, failure would already be detected prior to completion of the vacuum test.

In addition to the foregoing changes to FMVSS No. 106's swell test requirements/procedures, NHTSA also proposes to update the ASTM test procedure referenced in S10.7 for the swell test to the current revision, D471–98e1.

9. Adhesion

FMVSS No. 106 requires that vacuum brake hose, other than wire-reinforced hose, have a minimum layer separation strength of 8 pounds per inch. There are no specifications for wire-reinforced hose. There is a similar, 8-pound-per-inch adhesion requirement in SAE J1403, although the SAE standard specifically identifies the layers as ''the tube from the plies'' and ''the cover from the plies.'' NHTSA tentatively concludes that there are no substantial differences between these two standards. Because NHTSA is proposing to combine the adhesion test with the swell test, however, the agency proposes to delete the stand-alone adhesion test specifications for vacuum brake hose from FMVSS No. 106.

10. Deformation

Paragraph S9.2.10, *Deformation*, of FMVSS No. 106 specifies testing short lengths of hose by compressing (flattening or collapsing) the hose to a specified dimension and then releasing the compression force. After five cycles, the minimum outside diameter (OD) of the hose must be at least a specified percentage of the original OD. SAE J1403 does not contain a similar set of deformation testing specifications. NHTSA does not propose any changes to the vacuum brake hose deformation requirements/specifications in FMVSS No. 106.

11. End Fitting Corrosion Resistance

Paragraph S9.2.11, *End fitting corrosion resistance*, of FMVSS No. 106 requires that vacuum brake hose end fittings show no surface base metal corrosion after being exposed to salt spray for 24 hours. Standard No. 106 provides an exception for that portion of the end fitting where crimping or the application of labeling information has caused displacement of the end fitting's protective coating. SAE J1403 does not contain any corresponding requirements. NHTSA does not propose any changes to Standard No. 106's end fitting corrosion resistance requirements.

The table below summarizes the differences between the vacuum brake hose requirements/procedures of FMVSS No. 106 and SAE J1403 and indicates which requirements/procedures NHTSA proposes incorporating into the standard.

TABLE 3.—COMPARISON OF VACUUM BRAKE HOSE REQUIREMENTS/PROCEDURES IN FMVSS NO. 106 AND SAE J1403

Requirement/Procedure		Existing FMVSS No. 106		SAE J1403
Vacuum Brake Hoses ''x'' Indicates Requirements/Procedures Proposed To Be Included in FMVSS No. 106				
Constriction Test	x	Specifications for constriction at end fittings		No corresponding specifications
High Temperature Resistance		Hose bent and exposed to elevated temperature, less severe than J1403.	x	High temperature conditioning, bend test, pressure test
Low Temperature Resistance		Similar, but does not include pressure test	x	Similar, but also specifies 175 psi pressure test
Ozone Resistance		Similar, 50 ppm ozone concentration	x	Similar, 100 ppm ozone concentration
Burst Strength	x	Same		Same
Vacuum Deformation	x	Limit 1/16 in. collapse of hose OD under vacuum.		No corresponding, stand-alone specification; high temperature test has specifications
Bend Test	x	Similar test, different measurement		Similar test, different measurement
Swell (Fuel Resistance)	1	Similar test, Reference Fuel A, no collapse or leakage permitted.	1	Similar test, Reference Fuel B, layer adhesion test specified
Adhesion		Similar, but is a stand-alone test	x	Similar, but is conducted after swell test fuel soak

TABLE 3.—COMPARISON OF VACUUM BRAKE HOSE REQUIREMENTS/PROCEDURES IN FMVSS NO. 106 AND SAE J1403—Continued

Requirement/Procedure		Existing FMVSS No. 106		SAE J1403
Deformation	x	Compression test	....	No corresponding test
End Fitting Corrosion Resistance hose end fittings.	x	Same as for hydraulic brake hose end fittings.		No corresponding test

Note 1: NHTSA proposes performing layer adhesion test once vacuum hose has been conditioned during swell test. NHTSA considers a stand-alone adhesion test unnecessary.

The agency notes that plastic vacuum brake tubing is being used in automotive applications, as it has been requested to issue legal interpretations on the application of requirements in Standard No. 106 to this type of material. This may lead to a situation similar to that for air brake hose, for which both rubber hose and plastic tubing are widely used and the agency is now proposing to create separate requirements for each type of hose. The agency is not aware of an SAE or other industry standard for plastic vacuum brake hose and therefore is not currently proposing any separate requirements for this material. If a suitable industry standard is developed for plastic vacuum brake tubing, the agency may consider adopting those requirements into Standard No. 106 as appropriate, as part of a future rulemaking activity.

D. Plastic Air Brake Tubing

NHTSA's performance requirements and test procedures relating to plastic air brake tubing are located in paragraph S7., *Requirements—Air brake hose, brake hose assemblies, and brake hose end fittings,* and paragraph S8., *Test procedures—Air brake hose, brake hose assemblies, and brake hose end fittings.* The corresponding SAE requirements/procedures are contained in SAE Surface Vehicle Standard J844, *Nonmetallic Air Brake System Tubing, Rev. June 1988* (SAE J844).

Standard No. 106's requirements for plastic air brake tubing are the same as those for rubber air brake tubing. NHTSA tentatively concludes that FMVSS No. 106 does not adequately address the performance requirements for plastic air brake tubing because of the significant difference in the materials, construction, and end fittings of plastic air brake tubing compared with rubber air brake hose. The agency tentatively concludes that due to the current requirements in the FMCSRs, plastic air brake tubing as widely used on air-braked vehicles has been, up until this time, compliant with SAE J844. Therefore, if SAE J844 compliance is no longer required by the FMCSRs, as has been proposed by the FHWA, then the potential exists that the requirements currently in Standard No. 106 will not adequately ensure the continued safe performance of plastic air brake tubing.

NHTSA proposes that the substantive requirements/procedures in SAE J844 be incorporated into FMVSS No. 106, including dimensional specifications, classifications, burst test, moisture absorption test, ultraviolet resistance test, cold temperature flexibility test, heat aging test, resistance to zinc chloride and methyl alcohol tests, boiling water stabilization and burst tests, cold temperature impact test, collapse resistance test, and hot tensile strength test. NHTSA proposes that two performance requirements currently in Standard No. 106 for air brake hoses, ozone resistance and oil resistance, continue to be required for plastic tubing. However, for the oil resistance test, NHTSA proposes a new test procedure consisting of oil conditioning followed by a burst test, rather than the volumetric expansion specification currently in Standard No. 106, as a test condition more appropriate for plastic tubing.

The agency also proposes incorporating the classifications and dimensional specifications from SAE Surface Vehicle Standard J1394, *Metric Nonmetallic Air Brake System Tubing, Rev. April 1991,* into FMVSS No. 106. Although not referenced by the petitioners, this standard contains requirements for plastic air brake tubing manufactured in metric sizes. NHTSA tentatively concludes that it is appropriate to include requirements for both metric and inch sizes of plastic air brake tubing.

Plastic air brake tubing is typically sold separately from the end fittings and therefore it is generally not sold or supplied as an air brake hose assembly, with the exception of coiled hoses used between tractors and trailers which are often pre-assembled using permanently-attached end fittings. In light of this, the SAE has developed separate standards for plastic air brake tubing and plastic air brake tubing assemblies and end fittings. SAE J844 contains performance requirements for plastic air brake tubing, while SAE Surface Vehicle Standard J1131, *Performance Requirements for SAE J844 Nonmetallic Tubing and Fitting Assemblies Used in Automotive Air Brake Systems,* contains performance requirements for plastic air brake tubing assemblies and end fittings.

The requirements in S7 of FMVSS No. 106 were developed for rubber air brake hose that is sized according to internal diameter (ID). Paragraph S7 contains few references to plastic/nylon tubing that, unlike rubber air brake hose, is sized according to outside diameter (OD) and is a significantly different product than rubber hose. Plastic tubing is generally manufactured from nylon but the generic term plastic is used in this notice to account for other types of plastic that may be used for this application. As previously discussed, the applicability of Table III in Standard 106 was amended so that it would only be applicable to brake hoses made from synthetic or natural elastomeric rubber, thus there are no dimensional requirements for plastic tubing in FMVSS No. 106. NHTSA proposes that new dimensional requirements for plastic air brake tubing be included in Standard No. 106 based on the dimensions currently used in SAE J844 (inch units) and SAE J1394 (metric units).

Non-coiled plastic tubing is used for air system plumbing to connect components that maintain a basically fixed relationship during vehicle operation. Coiled plastic tubing is generally used in flexible connections such as between a tractor and a semi-trailer. By coiling a long length of relatively stiff plastic tubing, a flexible coiled arrangement is obtained. Non-coiled tubing differs from conventional rubber hose in that it would not be used between components that experience relative motion, although it would still be subjected to vibration and other loads.

1. Classification

FMVSS No. 106 references Type I and Type II air brake hose and reusable end fittings which are required to be labeled as either ''AI'' or ''AII.'' SAE J844 and SAE J1394 classify plastic tubing as ''A''

for smaller diameter, non-reinforced tubing made from one layer of material, or ''B'' for larger diameter tubing made from two layers of material with a reinforcement braid located at the layer interface. Tubing is sized by the nominal OD of the tubing either in fractions of an inch or in millimeters. These designations are appropriate for plastic tubing but FMVSS No. 106 does not currently contain any references to Type A and B tubing or any dimensional requirements for plastic tubing.

It should be noted that FMCSR § 393.45(b)(ii) specifies that, for plastic tubing used on commercial motor vehicles, the reference to SAE J844 only includes Type B tubing. NHTSA proposes to update FMVSS No. 106 to include requirements for both Types A and B plastic tubing.

2. Dimensions and Tolerances

SAE J844 includes a table (Table 1) that prescribes, for each nominal size of tubing, the ID, OD, minimum wall thickness, and tolerances on the ID and OD. There are no corresponding dimensions in FMVSS No. 106. These dimensions are safety-critical because they ensure that the tubing is compatible with the fittings designed for that tubing. Incompatibility between tubing and end fittings can, among other things, cause the inside diameter of the tubing to collapse. NHTSA agrees with the petitioners that, if there are no requirements for these dimensions, there is the possibility that tubing of improper dimensions could pull out of the end fittings or otherwise prematurely fail at the connections, leak because of improper sealing due to dimensional incompatibility with fittings, or loosen due to thermal expansion and contraction. Accordingly, NHTSA proposes to incorporate into Standard No. 106 the dimension and tolerance requirements contained in SAE J844.

3. One Hundred Percent Leak Test

SAE J844 requires tubing manufacturers to subject all air brake tubing to a 200-psi leak test. The specific testing methods, including test media, rate of application, and required performance measures, are not specified in SAE J844 and are, therefore, determined by the tubing manufacturer.

FMVSS No. 106 does not address the quality control methods that hose manufacturers use to ensure that all hoses installed on motor vehicles will meet the standard. Rather, the manufacturers of such components are required to certify compliance, and each brake hose or assembly is required to meet the standard. NHTSA tentatively concludes that plastic air brake tubing manufacturers will continue to perform quality control tests on their products, but that such requirements should not be included in FMVSS No. 106.

4. Burst Test

SAE J844 specifies that tubing be stabilized at 75 degrees F for a period of 30 minutes to 3 hours. Pressure (of an unidentified medium, assumed to be air) in the tube is increased at a constant rate to reach a specified minimum burst pressure (specified in Table 2) within a time period of 3 to 15 seconds. The tubing must sustain the specified pressure without bursting. FMVSS No. 106 specifies using water as the test media, with a pressure increase rate of approximately 1,000 psi per minute, to a pressure of 800 psi. The specified pressures in Table 2 of SAE J844 range from 1000 to 1200 psi for Type A tubing and 800 psi to 1400 psi for Type B tubing (each size of tubing has one specific burst pressure). Therefore, the pressure requirements in SAE J844 are equal to or higher than those in FMVSS No. 106. While the performance differences of the different test media have not been measured, it would appear that using air would be more appropriate for air brake tubing than using water. NHTSA welcomes comments on the use of air versus water as the test medium.

In NHTSA' judgment, the greater pressure requirements in SAE J844 are more rigorous than existing requirements in FMVSS No. 106. NHTSA proposes changing the burst strength requirements in FMVSS No. 106 to the higher values in SAE J844, and specifying air as the test medium rather than water. NHTSA proposes that the pressure in the tubing be increased in a period of 5 seconds because using the range of 3 to 15 seconds in SAE J844 would specify testing at both 3 and 15 seconds and therefore would be too broad of a specification for use in FMVSS No. 106. NHTSA welcomes comments on the use of air versus water as the test medium.

5. Moisture Absorption

SAE J844 specifies that a tubing specimen be conditioned for 24 hours at 230 degrees F, immediately weighed, and then subjected to 100 percent relative humidity for 100 hours at 75 degrees F. Within five minutes of removal from the humidity chamber, surface moisture is wiped from all surfaces of the tubing and the tubing is weighed. The moisture absorption shall not exceed 2 percent by weight. FMVSS No. 106 does not have a corresponding test. NHTSA proposes incorporating the moisture absorption specification from SAE J844 into FMVSS No. 106.

6. Ultraviolet Resistance

SAE J844 specifies that the tubing be placed in a Q-Panel QUV test apparatus equipped with Philips Type UVS–340 bulbs. If the test apparatus is equipped with a ''Solar Eye,'' the bulbs need not be rotated and the irradiance should be set at 0.85; however, all bulbs should be discarded after 4800 hours maximum or if they fall below the 0.85 irradiance level, whichever occurs first. If the test apparatus is not equipped with a ''Solar Eye,'' the bulbs must be rotated every 400 hours maximum, per the apparatus manufacturer and ASTM G 53. Bulbs used in such an apparatus must be discarded after 1600 hours of use.

The samples are placed in the sample racks of the test apparatus and are exposed for 300 hours at a temperature of 113 degrees F, with the surface of the specimen mounting plate located no more than 2 inches from the bulbs. The samples are rotated according to ASTM D 4329 except the rotation is each 96 hours rather than weekly. No humidity other than ambient is introduced. Immediately after the samples are removed from the ultraviolet light test apparatus, they are subjected to an impact test using a device depicted in Figure 1 of SAE J844. The tubing samples are then cooled to 75 degrees F and subjected to a burst test, with a minimum burst pressure that is at least 80 percent of the value assigned to the tubing based on the tubing's outside diameter as indicated in Figure 2 of SAE J844.

NHTSA notes that in November 1973 (38 FR 31302), NHTSA deleted the ultraviolet light resistance tests for air brake hoses in Standard No. 106, stating that sufficient data had not been generated to support a minimum performance requirement. However, NHTSA tentatively concludes that the plastic material used in nylon air brake tubing is significantly different from the materials used in rubber air brake hoses, and that plastic is susceptible to deterioration that can cause embrittlement due to exposure to ultraviolet light. NHTSA also notes that air brake tubing is installed on heavy vehicles in locations that are exposed to naturally-occurring ultraviolet light. Therefore, NHTSA proposes to incorporate SAE J844's ultraviolet resistance test into FMVSS No. 106, although the agency proposes to reference the apparatus specified in ASTM G154–00, *Standard Practice for Operating Fluorescent Light Apparatus for UV Exposure of Nonmetallic*

Materials, rather than the one specified in ASTM G53 because ASTM G154–00 is an updated version of ASTM G53. NHTSA also proposes to reference two additional ASTM standards: ASTM D4329–99, *Standard Practice for Fluorescent UV Exposure of Plastics,* which is currently referenced in SAE J844, and ASTM G151–97, *Standard Practice for Exposing Nonmetallic Materials in Accelerated Test Devices that Use Laboratory Light Sources,* which is not currently referenced in SAE J844, but may provide useful guidance for conducting UV testing.

7. Cold Temperature Flexibility

SAE J844 specifies tubing to be conditioned at 230 degrees F for 24 hours. Within 30 minutes of removal from the oven, the tubing is placed in a cold chamber at minus 40 degrees F and conditioned for 4 hours. A test cylinder with a radius equal to 6 times the nominal OD of the tubing is also conditioned at minus 40 degrees F for 4 hours. The tubing and test cylinder are removed from the cold chamber and the tubing is bent 180 degrees around the test cylinder within a period of 4 to 8 seconds. The tubing must show no signs of fracture.

FMVSS No. 106 also contains a low temperature resistance test procedure. The FMVSS No. 106 procedure differs in that the hose is bent around the test cylinder prior to being conditioned in the cold chamber; the cold conditioning is for 70 hours; and there is no high-temperature preconditioning. The table in paragraph S7 (Table IV) includes dimensions for the test cylinder radius for each nominal size of hose. Table IV references hose size by nominal diameter, and does not differentiate between hose, which is sized by inside diameter, and tubing, which is sized by outside diameter. Applying the test cylinder radii in Table IV to the nominal outside diameter of tubing, and then comparing these values to the test cylinder radii in SAE J844, reveals that the test cylinder radii in SAE J844 are smaller and, therefore, SAE J844 provides a more stringent test condition in terms of bend radius than does FMVSS No. 106.

The test conditions of ''cold temperature flexibility'' in SAE J844 do not correspond to the ''low temperature resistance'' test in FMVSS No. 106. SAE J844 is a test to evaluate the crack resistance of tubing, subjected to bending while in a cold state, while the FMVSS No. 106 test condition is an evaluation of pre-bent tubing's resistance to cracking when subjected to cold temperatures. Because SAE J844 is more rigorous, NHTSA proposes substituting it for the current test in FMVSS No. 106. NHTSA tentatively concludes that the time period of 4 to 8 seconds to accomplish the bending of the tubing is appropriate for this test because the bending is done by hand and is therefore subject to some variability. Specifying the 4 to 8 second time period will preclude the need for specialized bending apparatus that can meet a specific timing specification.

8. Heat Aging

SAE J844 includes three different heat aging tests, which specify use of three separate samples of the same tubing. A tubing sample is subjected to one of the aging tests described below, then subjected to the burst test at room temperature, with a minimum burst strength of 80 percent of a specified value.

The first test is to bend a section of tubing 180 degrees around a test cylinder with a diameter equal to two times the tubing's minimum bend radius, as specified in the standard. The tubing and test cylinder are conditioned for 72 hours at 230 degrees F and then removed to cool at 75 degrees F. Within 30 minutes after stabilizing at 75 degrees F, the tubing is straightened within a time period of four seconds. The tubing is then bent 180 degrees in the opposite direction within a time period of 4 to 8 seconds.

The second test is to condition the tubing at 230 degrees F for 72 hours, then remove and cool the tubing to 75 degrees F. Within 30 minutes after stabilizing at 75 degrees F, the tubing is subjected to an impact test as specified in the standard.

The third test involves conditioning the tubing by immersing it in boiling water for 2 hours, then removing and cooling it to 75 degrees F. Within 30 minutes after stabilizing at 75 degrees F, the tubing is subjected to an impact test as specified in the standard.

FMVSS No. 106 does not have corresponding test procedures. The high temperature resistance test (S8.1) evaluates a hose for resistance to visible cracking after being conditioned at 212 degrees F for 70 hours and then straightened. There is no burst (pressure) strength requirement. NHTSA proposes incorporating the SAE J844 test procedures for plastic air brake tubing into FMVSS No. 106.

9. Zinc Chloride Resistance

SAE J844 specifies that tubing be bent around a test cylinder and immersed in a 50 percent by weight (specific gravity of 1.576 or a Baume rating of 53 degrees at 60 degrees F) aqueous solution of zinc chloride for 200 hours at 75 degrees F. After removal from the solution, the tubing must show no evidence of cracking on the outside diameter. FMVSS No. 106 specifies that a hose assembly be immersed in a 50 percent zinc chloride aqueous solution for 200 hours, with no visible cracks permitted when viewed with 7-power magnification. SAE J844's zinc chloride test procedures are more rigorous due to the bending of the tubing during the conditioning. Accordingly, NHTSA proposes to incorporate the zinc chloride resistance performance requirements and test procedures from SAE J844 into FMVSS No. 106.

10. Resistance to Methyl Alcohol Resistance

SAE J844 specifies that the tubing be bent around a test cylinder and then immersed in 95 percent methyl alcohol for 200 hours at 75 degrees F. After removal from the solution, the tubing must show no evidence of cracking. This test ensures that air brake tubing is not susceptible to damage from alcohol that is sometimes introduced into air brake systems during extreme cold weather conditions, or from windshield washer fluid containing alcohol that may spill onto brake tubing. There is no corresponding test procedure/performance requirement in FMVSS No. 106, and NHTSA proposes to incorporate the one specified in SAE J844. NHTSA also welcomes comments on the suitability of adopting this test procedure/performance requirement for rubber air brake hoses, since they are also susceptible to alcohol exposure for the same reasons.

11. Stiffness

SAE J844 specifies that an 11-inch long sample of tubing be slipped over a rod to maintain the hose in a straight position within plus or minus ⅛ inch. The tubing and rod are conditioned at 230 degrees F for 24 hours, then removed and cooled to 75 degrees F. Within 30 minutes after stabilizing at 75 degrees F, the rod is removed and tubing is subjected to a stiffness test as outlined in the standard. The tubing must require no more that the specified amount of force to deflect 2 inches. This test ensures that the flexibility of the tubing is not reduced when the tubing is subjected to elevated temperatures. An increase in stiffness after exposure to elevated temperatures indicates that the tubing is susceptible to kinking or embrittlement under this condition. Because Standard No. 106 does not contain a similar set of procedures/requirements, NHTSA proposes to incorporate the stiffness procedures/

requirements from SAE J844 into FMVSS No. 106.

12. Boiling Water Stabilization and Burst Test

SAE J844 specifies that the tubing be immersed in boiling water for 2 hours. The tubing is then removed from the water and subjected to a burst test at room temperature. The standard specifies a minimum burst strength of 80 percent of the value assigned to the tubing based on the tubing's nominal outside diameter. NHTSA tentatively concludes that this test condition is redundant because a similar boiling water conditioning test, followed by impact and burst tests, is already specified by the third heat aging test, as described above. FMVSS No. 106 has no corresponding test procedure. Because NHTSA is already proposing to incorporate the heat aging test from SAE J844, the agency does not propose to also incorporate SAE J844's stand-alone boiling water stabilization and burst test.

13. Cold Temperature Impact

SAE J844's cold temperature impact test specifies the use of 10 separate samples of air brake tubing. Five samples are conditioned for 24 hours at 230 degrees F, and the other five are conditioned in boiling water for 2 hours. All samples and the impact test apparatus are then conditioned at minus 40 degrees F for 4 hours. Each sample is then subjected to the impact test per Figure 1, with no visible cracks permitted. Each sample is then warmed to 75 degrees F and, within 30 minutes of stabilization at this temperature, a burst test conducted. Each tubing sample must withstand 80 percent of the specified burst strength. If any one of the samples fails these tests, the entire test sequence is repeated using twenty samples. If any one of these twenty samples fails, then the entire manufacturing lot is to be rejected. This test evaluates the resistance of the tubing to cold temperature fracturing. FMVSS No. 106 does not have corresponding test procedures/performance requirements.

In an August 1970 notice of proposed amendment to FMVSS No. 106 (35 FR 13738), NHTSA's predecessor agency, the National Highway Safety Bureau, addressed the issue of a sampling approach in testing standards. That notice indicated that the SAE approach, which includes testing of several samples and then retesting additional samples if initial failures are found, is not an essential methodology to demonstrate non-compliance. Rather, the agency indicated that it favored testing one brake hose sample to determine compliance. Manufacturers, on the other hand, should or may conduct testing on multiple samples as part of their quality control procedures to determine whether continued failures exist such as to demand rejection of an entire manufacturing lot. NHTSA tentatively concludes that it is still preferable to subject only one sample to a particular set of testing procedures for compliance purposes. Accordingly, the agency proposes that only one plastic brake tubing sample be subjected to the cold impact test procedures contained in SAE J844. With this one modification, NHTSA proposes to incorporate the cold impact test procedures/performance requirements from SAE J844 into FMVSS No. 106.

14. Adhesion Test

SAE J844 specifies that Type B, reinforced tubing, be subjected to an adhesion test. A helical sample ¼ inch wide and with a length equal to five times the circumference of the tubing is cut from the tubing. With the tubing sample at a temperature of 75 degrees F, a knife blade is used to initiate separation at the braid interface. Further attempts to separate the sample must result in no separation over the entire length of the test sample other than at points at which the braid is present. SAE J844 does not include any specifications for Type A, non-reinforced tubing because this type of hose is only manufactured from one layer. Standard No. 106 presently requires that hose have a minimum adhesion strength of 8 pounds per linear inch of hose.

NHTSA tentatively concludes that the ''no separation'' performance requirement in SAE J844 would be unenforceable because during a destructive test the tubing will ultimately fail at some point during the test. NHTSA tentatively concludes that the existing Standard No. 106 minimum adhesion requirement of 8 pounds per linear inch is suitable for rubber air brake hose. Given the SAE J844 ''no separation'' specification for Type B plastic tubing, however, NHTSA proposes that a higher minimum adhesion requirement is appropriate for that type of tubing. NHTSA therefore proposes a minimum separation value of 25 pounds per linear inch for Type B plastic tubing, which the agency tentatively concludes is severe enough to ensure that an adequate bond exists between the tubing layers but not so high as to present enforcement concerns. Accordingly, NHTSA proposes that the adhesion test procedures/performance requirements for Type B tubing in SAE J844 be incorporated into FMVSS No. 106, with a minimum separation strength of 25 pounds per linear inch. Rather than specifying a stand-alone adhesion test, however, NHTSA is proposing to incorporate SAE J844's heat aging adhesion test, which is described below. With respect to Type A tubing, because such tubing is typically manufactured from a single extrusion of nylon with no internal layers, the agency does not believe it is necessary to specify an adhesion test for that type of tubing.

NHTSA proposes to deviate from SAE J844's test procedure because it appears that it would be difficult to mount the test specimen in a tension testing machine if the specimen is cut from a ¼-inch wide helical section of tubing. NHTSA proposes that a 1-inch length of tubing be cut lengthwise and two flaps of material be cut using a sharp knife so that the test sample can be clamped in the machine. The adhesion test for air brake hose that uses a rotating mandrel to support the inner layers of the hose was considered for tubing but does not appear to be practical for tubing since it would be difficult to separate (cut) the outer layer of the tubing from the inner layer with the inner layer of the tubing in an intact, round shape. NHTSA welcomes comments on the proposed adhesion test procedures/performance requirements.

15. Heat Aging and Adhesion Test

SAE J844 specifies that a Type B tubing sample be conditioned in the first heat aging test (bend tubing, heat conditioning, and re-bend tubing after cooling) and then subjected to the adhesion test, detailed above. Type A tubing is not subjected to this test. FMVSS No. 106 does not have a corresponding set of test procedures/performance requirements. NHTSA proposes to incorporate the heat aging adhesion test procedures from SAE J844, but that the minimum adhesion performance requirement for Type B tubing be raised from 8 pounds per linear inch to 25 pounds per linear inch.

16. Collapse Resistance

SAE J844 specifies that three test samples of specified length be prepared and the minor outside diameter (OD) be measured. The minor OD is the smallest outside diameter of the tubing measured at the center of the sample, typically located 90 degrees from the natural lay line of the tubing. The samples are installed on a specified bend test fixture and, following the natural bend of the tubing, each tube is bent 180 degrees to the minimum kink radius listed in the standard. The samples are conditioned

at 200 degrees F for 24 hours and then cooled to room temperature (75 degrees F) and, while still installed on the bend fixture, the minor OD is measured. The minor OD collapse of the heat-conditioned samples must not exceed 20 percent of the initial minor OD. FMVSS No. 106 does not contain corresponding test procedures/performance requirements.

NHTSA proposes to incorporate the collapse resistance test procedures/performance requirements from SAE J844 into FMVSS No. 106, with two changes. First, the agency proposes to specify that only one sample be tested rather than three. Second, NHTSA notes that the minimum kink radii in Table 3 of SAE J844 represents the minimum unsupported bend radii for tubing as installed on a vehicle while the test bend radii in Table 2 of that standard represent the minimum bend radii for supported tubing during applicable test procedures. NHTSA tentatively concludes that because heavy vehicle manufacturers are aware that such installation criteria are included in SAE J844 there is no need to incorporate them into FMVSS No. 106. NHTSA welcomes public comments on both of these proposed modifications.

17. Oil Resistance

SAE J844 does not include an oil resistance test as specified by FMVSS No. 106. The oil test is used to measure the volumetric expansion of specimens prepared from the inner and outer layers of a hose, after immersion in ASTM No. 3 oil at 212 degrees F for 70 hours, with a maximum permissible volumetric expansion of 100 percent. While such a test is appropriate for the type of materials used in elastomeric, synthetic rubber air brake hoses, NHTSA tentatively concludes that in the case of plastic air brake tubing it would be more appropriate to evaluate a mechanical property of the tubing such as the ability to pass a burst test after conditioning in oil.

NHTSA is aware of a problem that was encountered several years ago with pre-assembled air brake tubing assemblies used for tractor-trailer connections supplied by one manufacturer. This particular product, when subjected to conditioning in oil, would undergo material property changes that resulted in failure (dissolution) of the tubing. The manufacturer of the tubing assemblies petitioned NHTSA to request that coiled air brake tubing assemblies be exempt from the oil resistance requirements in Standard No. 106. NHTSA ultimately denied this request and stated in the denial (58 FR 38346) that coiled air brake tubing assemblies are subjected to elevated temperatures and exposed to oil. The agency notes that this particular product was not compliant with SAE J844.

NHTSA tentatively concludes it is critical that plastic air brake tubing be resistant to oil exposure. Oil can be introduced into air brake systems due to air compressor leakage, and exposed portions of tubing are subject to oil and grease contamination from sources such as hydraulic work equipment mounted on vocational trucks, axle lubricant leakage, and fifth wheel lubrication. Therefore, NHTSA proposes a test procedure for plastic tubing that combines existing FMVSS No. 106 oil conditioning criteria with the burst strength requirements of SAE J844.

The proposed test procedure involves preparation of a tubing assembly, conditioning it in ASTM IRM 903 oil (which supercedes ASTM No. 3 oil as described in ASTM D471–98e1, *Standard Test Method for Rubber Property-Effect of Liquids*), and then subjecting the tubing to the burst test specified in SAE J844. NHTSA proposes that the tubing not burst at less than 80 percent of the burst pressure listed in Table 2 of SAE J844. This required performance is the same as that specified in SAE J844 for the boiling water stabilization and burst test. NHTSA tentatively concludes that using an 80 percent value for the oil test is appropriate given that the tubing is pre-conditioned in oil, similar to the preconditioning of the boiling water test, and notes that the tubing would not be required to have the 100 percent burst strength required for non-conditioned tubing tested at room temperature. NHTSA welcomes comments on this proposed test procedure in lieu of the existing Standard No. 106 requirement that limits volumetric expansion of the material during oil conditioning.

18. Ozone Resistance

SAE J844 does not include an ozone resistance test as specified by FMVSS No. 106. Standard No. 106 specifies bending a hose around a test cylinder and conditioning it in a test chamber at 50-ppm ozone concentration at 104 degrees F for 70 hours. After performing this test, no visible cracks may be detected when viewed under 7-power magnification. The agency notes that the ozone test for hydraulic brake hose in SAE J1401 specifies an ozone concentration of 100 ppm and that, as noted above, NHTSA is proposing to increase the ozone concentration requirements for all types of brake hose covered by FMVSS No. 106. Accordingly, NHTSA proposes that the ozone test that is currently specified in Standard No. 106 continue to be applied to plastic air brake tubing at the higher ozone concentration level of 100 ppm.

The table below summarizes the differences between the plastic air brake tubing requirements/procedures of FMVSS No. 106 and SAE J844 and indicates which requirements/procedures NHTSA proposes incorporating into the standard.

TABLE 4.—COMPARISON OF NYLON AIR BRAKE TUBING REQUIREMENTS/PROCEDURES IN FMVSS NO. 106 AND SAE J844

Requirement/Procedure		Existing FMVSS No. 106		SAE J844
Plastic Air Brake Tubing				
"x" Indicates Requirements/Procedures Proposed to be Included in FMVSS No. 106. A new section would be added with performance requirements/test procedures for plastic air brake tubing. Some existing requirements/procedures for air brake hose would also apply.				
100 Percent Leak Test	x	Not Specified		Each lot to be tested.
Classification		Type AI or AII air hose	x	Type A or B plastic air brake tubing.
Dimensional Specifications		None	x	J844 (inch) and J1394 (metric) dimensions for plastic tubing.
Burst Test		800 psi requirement	x	Strength based on tubing size and type, minimum is 800 psi.
Moisture Absorption		None	x	Not to exceed 2 percent.
Ultraviolet Resistance		None	x	300 hour exposure followed by impact test.

TABLE 4.—COMPARISON OF NYLON AIR BRAKE TUBING REQUIREMENTS/PROCEDURES IN FMVSS NO. 106 AND SAE J844—Continued

Requirement/Procedure		Existing FMVSS No. 106		SAE J844
Cold Temperature Flexibility		Low temperature resistance but not flexibility.	x	Cold conditioning followed by bending around test cylinder.
Heat Aging		Does not include burst test	x	Three separate test procedures followed by burst test.
Zinc Chloride Resistance		Similar but tubing is not bent during test	x	Similar, tubing is conditioned while bent around test cylinder.
Methyl Alcohol Resistance		None	x	Tubing bent around test cylinder and conditioned in alcohol for 200 hours.
Stiffness		None	x	Stiffness of tubing after conditioning at elevated temperature.
Boiling Water Stablization and Burst Test		None		Considered redundant since more severe test condition included in heat aging test.
Cold Temperature Impact		None	x	Cold conditioning, impact test, and burst test.
Adhesion Test		8 lbs. per linear inch, for any air brake hose.	1	Type B tubing only, no separation permitted.
Heat Aging Adhesion Test		None	1	Type B tubing only, heat aging and adhesion test. No separation permitted.
Collapse Resistance		None	x	Max. 20 percent collapse after high temp. conditioning bent around test cylinder.
Ozone Resistance	2	Same as air brake hose, 50 ppm		None.
Oil Resistance	3	Same as air brake hose	....	None.

Note 1: NHTSA proposes a 25 lbs. per inch adhesion strength instead of ''no separation.''
Note 2: NHTSA proposes 100 ppm ozone concentration.
Note 3: NHTSA proposes an oil soak and burst test for plastic tubing.

E. Plastic Air Brake Tubing Assemblies and End Fittings

NHTSA's performance requirements and test procedures relating to plastic air brake tubing assemblies and end fittings are located in paragraph S7., *Requirements—Air brake hose, brake hose assemblies, and brake hose end fittings*, and paragraph S8., *Test procedures—Air brake hose, brake hose assemblies, and brake hose end fittings*, of FMVSS No. 106. The corresponding SAE performance requirements/test procedures are contained in SAE Surface Vehicle Standard J1131, *Performance Requirements for SAE J844 Nonmetallic Tubing and Fitting Assemblies Used in Automotive Air Brake Systems, Rev. August 1998* (SAE J1131). SAE's end fitting performance requirements/test procedures are located in SAE Surface Vehicle Standard J512, *Automotive Tube Fittings Rev. October 1980* (SAE J512) and SAE Surface Vehicle Standard J246, *Spherical and Flanged Sleeve (Compression) Tube Fittings Rev. March 1981* (SAE J246).

This section addresses performance requirements and test procedures for plastic air brake tubing assemblies and end fittings. The previous section compared FMVSS No. 106 to SAE J844 and only addressed the properties of the tubing and not the properties of tubing assemblies or end fittings. SAE J1131 evaluates the performance of SAE J844 tubing when used in an assembly with either permanently-attached or reusable end fittings.

NHTSA proposes to incorporate the following end fitting performance requirements/test procedures from SAE J1131 into Standard No. 106: the hot tensile strength test, the conditioned pull test, the vibration leak test, the proof and burst test, the fitting compatibility test, and the serviceability test. The serviceability test specifies that an end fitting, after five assembly and disassembly cycles, not leak more than 25 cm^3/min. and NHTSA proposes that this test will only apply to fittings that use a threaded retention nut. Push-to-connect fittings are often believed to result in damage to the tubing upon disassembly and therefore may not be able to meet this specification. When such fittings are disassembled, the end of the tubing can be cut off if there is enough slack in the assembly, or a new section of tubing will need to be fitted for reinstallation.

The agency also proposes specifying constriction testing for plastic air brake tubing assemblies as such testing is already specified for air brake hose assemblies under Standard No. 106.

NHTSA proposes including the current corrosion resistance test in FMVSS No. 106, as applied to all types of brake hose fittings (*i.e.*, hydraulic, vacuum, air), for fittings used with plastic air brake tubing. End fitting corrosion specifications are included in SAE J246 and SAE J512 rather than SAE J1131, and these specifications are different than those currently in FMVSS No. 106, with the SAE test procedures including longer exposure to salt spray but less severe performance requirements for permissible corrosion.

A detailed discussion of the differences between the performance requirements/test procedures of SAE J1131, SAE J246, SAE J512, and FMVSS No. 106 as they relate to plastic air brake tubing assemblies and end fittings follows, along with the agency's proposed resolution of those differences.

1. Tensile Strength

FMVSS No. 106 specifies that an air brake hose assembly for use between either the frame and the axle, or a towing and towed vehicle, meet a longitudinal pull test, at a 1 inch per minute force application rate without separating from its end fittings at the following force levels: 250 pounds for ¼ inch or less, or 6mm or less, nominal ID; 325 pounds for more than ¼ inch or 6mm nominal ID. A hose assembly used in any other application must withstand force levels of: 50 pounds for ¼ in or less, or 6 mm or less, nominal ID; 150 pounds for ⅜ inch, ½ inch, or 10 mm to 12 mm, nominal ID; and 325 pounds if the hose assembly is larger than ½ inch or 12 mm nominal ID. A coiled nylon tube assembly may either meet these requirements or, alternatively,

may meet the requirements in FMCSR 393.45.

While FMVSS No. 106's air brake hose performance requirements and test procedures are currently presented in terms of nominal inside diameter, the agency notes that plastic air brake tubing is sized according to nominal outside diameter. In an August 7, 1974, amendment to FMVSS No. 106 (39 FR 28436), NHTSA responded to a petition from Samuel Moore Company in which the petitioner contended that it was appropriate to base Standard No. 106's tensile strength requirements on the nominal inside diameter of the tubing rather than on the tubing's nominal outside diameter. The petitioner argued that because ⅜-inch nominal OD plastic tubing has an inside diameter of ¼-inch and provides the same air flow capability as a ¼-inch nominal ID rubber hose, they should be subject to the same tensile strength requirements. In response to the petition, NHTSA decided to base the tensile strength requirements on the nominal inside diameter of the hose or tubing. Because plastic air brake tubing is labeled according to its nominal outside diameter, however, NHTSA now proposes to specify tensile strength requirements in the same manner to minimize confusion.

Unlike FMVSS No. 106, SAE J1131 does not contain a stand-alone tensile strength test for air brake tubing assemblies. Instead, SAE J1131 specifies tensile strength testing after an air brake tubing assembly has been assembled and pre-conditioned in some manner. The SAE tensile strength performance requirements for pre-conditioned tubing assemblies are not as rigorous as NHTSA's stand-alone requirements. Although the agency proposes to incorporate SAE J1131's tensile strength requirements, NHTSA also proposes to retain the stand-alone tensile strength requirements already present in FMVSS No. 106, with the modifications discussed below.

Standard No. 106's tensile strength requirements provide an alternative set of requirements for coiled nylon tubing. Coiled nylon tubing may either meet the tensile strength requirements in FMVSS No. 106 or, alternatively, may meet the requirements in section 393.45 of the FMCSRs. FMCSR § 393.45, in turn, references the tensile strength requirements of SAE J844. The agency notes, however, that SAE J844 does not contain tensile strength requirements for end fitting retention. The end fitting retention requirements are contained in SAE J1131, which is not referenced in FMCSR § 393.45.

Coiled nylon tubing assemblies, by design, provide that tensile loads on these assemblies are spread out over the long length of the hose in its coiled form, and thus large amounts of relative motion, such as between a tractor and a semi-trailer, are not expected to result in significant tensile load on the end fittings that would pull the tubing out of the fitting. Nevertheless, NHTSA tentatively concludes that the potential exists for the supply and control air lines connecting tractors and semi-trailers to get tangled among themselves, among various components (springs and poles) that are used to support the lines above the truck frame, or with the electrical cord. The agency also notes that these air lines are completely exposed to the elements, are frequently connected and disconnected, and may be subject to various amounts of stretching depending on the physical dimensions of the trailers that are towed.

Despite these potential hazards in the operating environment of coiled nylon tubing, however, FMVSS No. 106, as presently constituted, provides no tensile strength requirements for coiled nylon tubing assemblies if the optional compliance with SAE J844 as referenced in § 393.45 is exercised. In contrast, small, ⅛-inch air brake tubing is essentially prohibited from use in air brake systems because of its inability to meet Standard No. 106's 50-pound tensile strength requirement, even though the application of this tubing would typically be inside the truck cab and routed to protect it from damage. As discussed below, NHTSA proposes to correct this disparity in treatment by requiring coiled nylon tubing to meet SAE J1131's end fitting retention requirements and by lowering the tensile strength requirements for tubing with relatively small nominal outside diameters. The agency proposes to lower the tensile strength requirement for ⅛-inch nominal OD tubing from 50 pounds to 35 pounds and, for 5⁄32-inch OD tubing, from 50 pounds to 40 pounds.

The agency proposes to retain the existing FMVSS No. 106 tensile strength requirements for air brake tubing assemblies used between a frame and an axle, or between a towed and a towing vehicle, of 250 pounds for a ⅜-inch or less, or 10 mm or less, in nominal outside diameter, and 325 pounds for a tubing assembly larger than ⅜-inch or 10 mm in nominal outside diameter. With respect to plastic air brake tubing assemblies used for any other purpose, the agency proposes to require a tensile strength of: 35 pounds for tubing with a nominal outside diameter of ⅛ inch or less (3 mm or less); 40 pounds for tubing with a nominal outside diameter of 5⁄32 inch (4 mm); 50 pounds for tubing with a nominal outside diameter between 3⁄16-inch and ⅜-inch (between 5 mm and 10 mm); 150 pounds for tubing with a nominal outside diameter between ½-inch and ⅝-inch (between 11 mm and 16 mm); and 325 pounds for tubing with a nominal outside diameter larger than ⅝-inch (16 mm).

2. Hot Tensile Strength

SAE J1131 specifies that a 6-inch long tubing assembly be placed in a tensile testing machine, with the lower 4 inches of the assembly submerged in boiling water for 5 minutes. The assembly is then pulled at a rate of 1 inch per minute. The required performance is either 50 percent elongation of the hose without end fitting separation or the assembly must sustain a specified tensile load. Standard No. 106 does not have a corresponding test condition. Compared to the tensile strength requirements in FMVSS No. 106, the end fitting separation strength requirements in SAE J1131 are lower, but Standard No. 106's requirements are for non-conditioned tubing assemblies. NHTSA proposes that the hot tensile strength requirement from SAE J1131 be incorporated into FMVSS No. 106. Considering that SAE J1131 does not include tensile loads for metric sized plastic brake tubing, however, the agency proposes to specify tensile load values for metric sized plastic brake tubing.

3. Conditioned Pull Test

SAE J1131 specifies that a tubing assembly undergo four temperature cycles of a minus 40 degree F cold soak for 30 minutes, normalizing at 75 degrees F, immersion in boiling water for 15 minutes and normalizing at 75 degrees F. After four complete cycles of temperature conditioning, the tubing assembly is subjected to a tensile test. The required performance is the same as for the hot tensile strength test above. This test evaluates the tubing's resistance to pulling out of its end fittings when subjected to thermal cycling. Equivalent performance requirements/test procedures are not included in FMVSS No. 106. NHTSA proposes that these performance requirements/test procedures be incorporated into Standard No. 106.

4. Vibration Leak Test

SAE J1131 specifies that an 18-inch long hose assembly be subjected to one million cycles on a vibration machine with one end of the hose fixed and the other end stroked 0.5 inches

perpendicularly to the hose centerline at a rate of 600 cycles per minute, with ½ inch of slack in the hose. The hose is subjected to 120-psi air pressure during the test, and the test chamber temperature is initially 220 degrees F. After 250,000 cycles, the temperature is decreased to minus 40 degrees F. This temperature cycle is repeated after 500,000 cycles. The hose assembly is instrumented to measure leakage during the test. There are two performance requirements. First, the assembly must not leak at a rate greater than 50 cm^3 per minute at minus 40 degrees F or greater than 25 cm^3 per minute at 75 degrees F. Second, the attaching nut at each fitting cannot move when 20 percent of the original tightening torque is re-applied to the nut. FMVSS No. 106 has a leak test (S8.7), but it does not specify preconditioning of the hose by vibration, temperature, or other means, nor does it address fitting tightness after such conditioning. End fitting nut tightness is applicable to end fittings that can be disassembled such that new sections of tubing can be used with the existing fitting components, other than the compression sleeve and the tube support that are renewed when new tubing is installed. Swaged or crimped, permanently-attached fittings which cannot be disassembled for reuse, and push-to-connect fittings which can be reused but do not use a nut to secure the hose or tubing, are exempt from the nut tightness requirement.

The SAE J1131 performance requirements/test procedures ensure adequate end fitting performance to resist vibration and temperature cycling. NHTSA proposes that most of these performance requirements/test procedures be incorporated into FMVSS No. 106.

5. Proof and Burst Test

SAE J1131 specifies proof and burst tests to evaluate end fitting retention. The test apparatus includes a suitable hydraulic pressure source of an unspecified medium. Tubing samples are prepared with 12 inches of free hose length along with the fittings to be evaluated. One end of the assembly is plugged and the other end is attached to the pressure source. At a temperature of 75 degrees F, the pressure is increased to proof pressure and held for 30 seconds. The proof pressure is defined as one-half of the burst pressure specified in SAE J844. Pressure is then increased at a rate such that the specified burst pressure is achieved within 3 to 15 seconds. The fittings must not separate from the tubing and no visible leaks are permitted at less than the specified burst pressure. While FMVSS No. 106 contains leakage and burst performance requirements/test procedures, as detailed above, the burst pressures specified are lower than those in SAE J844 or SAE J1131. NHTSA proposes to incorporate the proof and burst test from SAE J1131 into FMVSS No. 106 so that there will be a specific test to evaluate the performance of end fittings used with plastic tubing. NHTSA proposes that this test be conducted using water, as this is the test fluid used for the burst strength test for air hoses in FMVSS No. 106.

6. Serviceability Test

SAE J1131 specifies a serviceability test to evaluate end fitting performance for reusable fittings after repeated assembly and disassembly. Tubing samples are prepared with 12 inches of free hose length, following the fitting manufacturer's recommendations for assembly of the end fittings. The fittings are then disassembled and reassembled a minimum of five times. The tubing assembly is then subjected to 120 psi of air at 75 degrees F, with resulting leakage not greater than 25 cm^3 per minute.

When flanged-sleeve fittings have been fitted in a plastic tubing assembly that requires replacement, the old tubing is removed by loosening the retaining nut on the fitting. A new section of tubing is cut from a bulk supply of tubing, new ferrules (compression sleeves that fit on the outside of the tubing) and tube supports (internal sleeves that fit inside the tubing) are installed at each end of the replacement tubing, and the new tubing is installed. The other components of the end fittings can be reused. For other types of repairs, such as replacement of a valve to which the tubing is connected, the tubing is disconnected in the same way. The portion of the fitting that threads into the valve can be removed and reinstalled on the replacement valve, and the tubing can then be reinstalled on the new valve using the existing ferrule that remains permanently attached to the tubing. The serviceability performance requirements/test procedures in SAE J1131 are a measure of the fitting's suitability for repeated assembly and disassembly similar to the example of valve replacement when all parts of the end fitting are reused.

Another type of end fitting is the push-to-connect fitting, which when used in an assembly, the end of the tubing is simply pushed into the fitting. To remove the tubing for repair purposes, a ring on the fitting around the outside of the tubing is raised to release the tubing, which can then be pulled out of the fitting. All information the agency has collected on this type of fitting indicates that the tubing may or may not be damaged upon removal from the fitting, depending on such factors as how much air pressure and pulling force the assembly has been subjected to during its use. If the tubing is damaged, a small section cut off for subsequent reassembly if there is a sufficient slack available in the assembly. If there is not enough tubing length to cut the end off for reassembly, then a new section of tubing will need to be installed. If the O-ring in the push-to-connect fitting is also damaged, it may be serviced or the entire fitting will need to be replaced. This would have to be detected by the technician checking for leakage after reassembly.

NHTSA proposes that the serviceability test be included in Standard No. 106 for those fittings that use a threaded retaining nut. This will ensure that the fittings can be separated and reused during servicing of brake system components with minimal likelihood of leakage upon reassembly. NTHSA does not believe the serviceability test could be consistently applied to push-to-connect fittings and therefore does not propose to include them in this test.

7. Fitting Compatibility Test

SAE J1131 specifies that test specimens be prepared according to the fitting manufacturer's recommendations, with 12 inches of free hose length. The assembly is filled with hydraulic fluid at atmospheric pressure and conditioned at 200 degrees F for 24 hours. The pressure is then increased to 450 psi for 5 minutes after which time the pressure is reduced to atmospheric levels and the assembly is cooled to 75 degrees F. Following this, the tubing assembly is cooled to minus 40 degrees F with the fluid at atmospheric pressure for 24 hours after which time the pressure is increased to 450 psi for 5 minutes. The tubing must not rupture or disconnect from the fittings. Standard No. 106 does not have a corresponding set of test procedures/performance requirements. Accordingly, NHTSA proposes to incorporate the fitting compatibility test and performance requirements from SAE J1131 into FMVSS No. 106.

8. Constriction

FMVSS No. 106 requires that each air brake hose assembly shall be not less than 66 percent of the nominal ID of the hose, except for those portions of end fittings that do not contain hose. SAE J1131 does not contain a corresponding requirement. As discussed in greater

detail above, NHTSA is proposing to require that all portions of air brake assemblies, including those portions of end fittings that do not contain hose, meet this requirement. NHTSA proposes to apply the same 66 percent of nominal ID constriction requirement to plastic air brake tubing assemblies. The agency proposes to apply this requirement based on the tubing's nominal inside diameter even though, as noted above, NHTSA is proposing that other requirements relating to air brake tubing be expressed in terms of the tubing's nominal outside diameter.

9. End Fitting Dimensional Requirements

FMVSS No. 106 does not presently contain end fitting dimensional requirements. The petitioners, however, requested incorporation of the requirements of FMCSR § 393.46, which references two SAE standards containing such requirements. FMCSR § 393.46 provides that splices in tubing installed on a vehicle after March 7, 1989, must use fittings that meet the requirements of SAE J512, *Automotive Tube Fittings Rev. October 1980* (SAE J512) or, for air brake systems, SAE J246, *Spherical and Flanged Sleeve (Compression) Tube Fittings Rev. March 1981* (SAE J246).

SAE J512 provides general and dimensional specifications for the various types of tube fittings intended for general application in the automotive, appliance, and allied fields, and includes the following categories of fittings: flare type fittings, inverted flare type fittings, and tapered sleeve compression type fittings intended for use with annealed copper alloy tubing. SAE J512 states that the spherical sleeve compression fitting components in SAE J246 are not to be intermixed with tapered sleeve compression type fitting components in SAE J512. The dimensions of single and double 45 degree flares on tubing used in conjunction with flared and inverted flared fittings in SAE J512 are provided in a different SAE standard, SAE J533.

The application of SAE J512 fittings in automotive braking systems as used in the U.S. is believed to be most commonly associated with inverted double flare hydraulic brake tubing connections, and also for metal tubing that may be used for connecting vacuum booster lines to engine manifolds. NHTSA does not believe that copper tubing is widely used in vehicle braking applications anymore. The agency also does not believe that SAE J512 fittings would be appropriate for use with plastic tubing.

Both SAE J246 and SAE J512 include dimensional requirements for fitting length, concentricity, pipe threads, wrench hexes, ferrule seats, tube support sleeves in the case of plastic tubing fittings, and material properties of brass stock used in fittings and stainless steel stock used in plastic tubing support sleeves. The standards also permit steel to be used if requested by the purchaser.

As already noted above, FMVSS No. 106 does not include any dimensional or material properties specifications for fittings used with brake hose or tubing. NHTSA does not agree with the petitioners that the substantive dimensional and material requirements of SAE J246 and SAE J512 are needed in FMVSS No. 106 for a number of reasons. First, the agency tentatively concludes that fittings that have demonstrated their compatibility with plastic air brake tubing through the testing required by SAE J1131. Second, NHTSA does not favor incorporating the SAE requirements because neither SAE J246 nor SAE J512 provides fitting standards for metric sized plastic tubing. Third, although FMVSS No. 106 does not provide any dimensional specifications for any types of fittings used with other types of brake hose or tubing, the agency is not aware of any field problems associated with these brake products. Fourth, even if FMVSS were to incorporate the dimensional specifications from the SAE standards, at least one of those standards, SAE J246, explicitly states that the standard is not intended to restrict or preclude other designs of a tube fitting for use with SAE J844 air brake tubing.

NHTSA tentatively concludes that the automotive industry generally standardizes, on a voluntary basis, such fittings for compatibility and repair purposes, and has no reason to believe that this will not continue to be the case for plastic air brake tubing fittings. Standard No. 106 currently permits specialized fittings as long as they can meet the specified performance requirements. In a November 13, 1973, final rule (38 FR 31302, Docket No. 1–5; Notice 8), NHTSA declined to adopt any specific standard for end fittings. For the reasons outlined above, NHTSA does not propose to include any dimensional or material properties specifications for end fittings at this time.

10. End Fitting Corrosion Resistance

SAE J246 and SAE J512 specify that the external surfaces and threads of carbon steel fittings be subjected to a 72 hour salt spray test per ASTM B117, with no appearance of red rust permitted except for: Internal portions of fittings; edges such as hex points, serrations, or thread crests where there may be mechanical deformation of the plating or coating of mass-produced parts or shipping effects; areas where the plating or coating is subjected to mechanical deformation due to crimping, flaring, bending, or other post plate metal forming operations; or areas where the parts are suspended or affixed in the test chamber where condensate can accumulate. Both standards specify that after January 1, 1997, no parts shall be cadmium plated due to environmental concerns relating to that process.

FMVSS No. 106 specifies that the fittings as installed on a brake hose assembly be subjected to a 24-hour salt spray test, the same test that is specified for hydraulic brake hose, as detailed above. The end fittings must show no base metal corrosion on the end fitting surface except where crimping or the application of labeling information causes a displacement of the protective coating. Standard No. 106 specifies that all fittings meet the corrosion test, and does not provide different specifications based on the end fitting's composition (steel, stainless steel, or brass).

The duration of the salt spray test is longer in the SAE standards than in FMVSS No. 106 (72 hours versus 24 hours), but the specified corrosion performance is more rigorous in FMVSS No. 106. The SAE standards specify testing of fittings without any hose attached, while FMVSS No. 106 specifies that the fittings be mounted to a hose for testing. NHTSA tentatively concludes that the existing corrosion resistance requirements in FMVSS No. 106 assure adequate integrity of end fittings, and in one respect is more strenuous than the SAE standards. Accordingly, the agency does not propose to change Standard No. 106's corrosion resistance requirements at this time. Nevertheless, NHTSA welcomes comments on the suitability and need to increase the duration of the salt spray test from the current 24 hours to the 72 hours specified in the SAE standards.

The table below summarizes the differences between the plastic air brake tubing assembly and end fitting performance requirements/test procedures of FMVSS No. 106 and SAE J1131 and indicates which requirements/procedures NHTSA proposes incorporating into the standard.

TABLE 5.—COMPARISON OF PLASTIC AIR BRAKE TUBING ASSEMBLY AND END FITTING REQUIREMENTS/PROCEDURES IN FMVSS NO. 106 AND SAE J1131, SAE J246, AND SAE J512

Requirement/Procedure		Existing FMVSS No. 106		SAE J1131
Fittings for Nylon Air Brake Tubing ''x'' indicates requirements/procedures proposed to be included in FMVSS No. 106. A new section would be added for the performance of these fittings. Existing FMVSS No. 106 requirements/procedures for fittings would also apply.				
Tensile Strength	x	Same as for air brake hose assemblies		No tensile test at ambient conditions.
Hot Tensile Strength		Only at ambient temperature, higher strength specifications.	x	Immersion in boiling water followed by pull test.
Conditioned Pull Test		Only at ambient temperature, higher strength specifications.	x	Four cold soak cycles followed by boiling water, then pull test.
Vibration Leak Test		None	x	Leakage specification after vibration conditioning.
Proof and Burst Test		Burst test, does not specify failure mode	x	No fitting separation during proof and burst tests.
Serviceability Test		None	x	Leakage specifications for flanged-sleeve fittings after five assembly cycles.
Fitting Compatibility Test		None	x	Pressure and temperature cycling to evaluate fitting retention.
Constriction	x	66 percent of nominal inside diameter		None.
End Fitting Dimensional Requirements	x	None		Specified in SAE J246 and SAE J512—variations permitted.
End Fitting Corrosion Resistance	x	Same as for hydraulic brake hose end fittings.		Specified in SAE J246 and SAE J512—similar, exemption for brass fittings.

V. Rulemaking Analyses and Notices

A. Executive Order 12866 and DOT Regulatory Policies and Procedures

Executive Order 12866, ''Regulatory Planning and Review'' (58 FR 51735, October 4, 1993), provides for making determinations whether a regulatory action is ''significant'' and therefore subject to Office of Management and Budget (OMB) review and to the requirements of the Executive Order. The Order defines a ''significant regulatory action'' as one that is likely to result in a rule that may:

(1) Have an annual effect on the economy of $100 million or more or adversely affect in a material way the economy, a sector of the economy, productivity, competition, jobs, the environment, public health or safety, or State, local, or Tribal governments or communities;

(2) Create a serious inconsistency or otherwise interfere with an action taken or planned by another agency;

(3) Materially alter the budgetary impact of entitlements, grants, user fees, or loan programs or the rights and obligations or recipients thereof; or

(4) Raise novel legal or policy issues arising out of legal mandates, the President's priorities, or the principles set forth in the Executive Order.

This notice was not reviewed under Executive Order 12866. Further, this notice was determined not to be significant within the meaning of the DOT Regulatory Policies and Procedures.

In this document, NHTSA is proposing to incorporate performance requirements and test procedures that are currently contained and/or referenced in the Federal Motor Carrier Safety Regulations. Those performance requirements/test procedures are based on voluntary standards adopted by the Society of Automotive Engineers. Although NHTSA proposes to incorporate the most recent versions of these SAE requirements/procedures and to apply them to brake hoses, tubing, and fittings for all motor vehicles, not just commercial motor vehicles, the agency tentatively concludes that most, if not all, such hoses, tubing, and fittings are already designed to meet the SAE requirements/procedures. However, in the event that there are some brake hose products that would need to be modified to comply with the proposed regulations, the agency (1) estimates that it is a small proportion of brake hose products that would need modification, as most are believed to already comply; and (2) tentatively concludes that the manufacturers of the components used in producing such products are not small businesses.

For air brake hoses, both rubber hose and plastic tubing products, and hydraulic and vacuum brake hoses installed on vehicles that are typically used as commercial motor vehicles such as medium duty trucks, the agency tentatively concludes that all of the brake hose products already comply with the proposed regulations. The largest effect of the proposed regulations would be on the light vehicle sector including passenger cars and light trucks, of which approximately 16 million vehicles are produced each year. As the typical light vehicle is equipped with three to four brake hoses, 48 to 64 million hydraulic brake hose assemblies as installed in new vehicles would be affected, as well as an unknown quantity of replacement brake hoses for light vehicles, but probably a few million. In addition, the agency estimates that approximately 15.5 million vacuum brake hoses and/or assemblies are installed on these vehicles.

Since large quantities of brake hose material are needed to manufacture these brake hoses, the agency believes that there are large manufacturers that produce both hydraulic and vacuum brake hoses in such large quantities. There are many small companies that use the brake hose material and end fitting components to produce brake hose assemblies, but NHTSA does not anticipate that they would be affected by the proposed changes because they simply assemble already-compliant components supplied by the large manufacturers.

The agency does not have data on how many hydraulic and vacuum brake hose assemblies would need to be modified to meet the proposed changes. Based on an informal survey of available hydraulic and vacuum brake hose assemblies, the agency estimates that perhaps as many as 20 percent may need to be modified in some manner to comply with the proposed requirements. Likewise, the agency does not know the cost to modify the manufacturing processes of the brake

hose materials to comply with the proposed changes, but can assume that it would be for improved additives to elastomeric compounds or improved synthetic fibers used as reinforcing materials. Again, the agency does not have any data on the cost of manufacturing such materials, but estimates that the modification of such manufacturing processes would add not more than ten cents to the cost of each brake hose assembly. The highest-cost estimate of the proposed regulations is based on production of 64 million new and replacement hydraulic brake hose assemblies, plus 16 million new and replacement vacuum brake hoses/assemblies, for a total of 80 million total affected brake hoses. If 20 percent of these need to be modified to meet the proposed changes, at a cost of ten cents per hose, the total cost would be $1.6M Therefore, the agency estimates the cost of complying with the proposed changes to FMVSS No. 106 to be between zero and $1.6 M. This potential additional cost would not, however, be expected to have any impact on small businesses, but only on large manufacturers of brake hose materials that are produced in large quantities. Accordingly, the agency does not believe that this proposal would have any significant economic effects. Nevertheless, the agency welcomes comments on the cost of compliance with the proposed requirements.

The DOT's regulatory policies and procedures require the preparation of a full regulatory evaluation, unless the agency finds that the impacts of a rulemaking are so minimal as not to warrant the preparation of a full regulatory evaluation. Since anecdotal evidence suggests that most, if not all, of these hose, tubing, and fittings are already compliant with the minimum performance requirements that the agency is proposing to apply, the agency believes that the impacts of this rulemaking would be minimal. Thus, it has not prepared a full regulatory evaluation.

B. Regulatory Flexibility Act

Pursuant to the Regulatory Flexibility Act (5 U.S.C. 601 *et seq.*, as amended by the Small Business Regulatory Enforcement Fairness Act (SBREFA) of 1996), whenever an agency is required to publish a notice of rulemaking for any proposed or final rule, it must prepare and make available for public comment a regulatory flexibility analysis that describes the effect of the rule on small entities (*i.e.*, small businesses, small organizations, and small governmental jurisdictions). The Small Business Administration's regulations at 13 CFR part 121 define a small business, in part, as a business entity ''which operates primarily within the United States.'' (13 CFR 121.105(a)). No regulatory flexibility analysis is required if the head of an agency certifies that the rule will not have a significant economic impact on a substantial number of small entities. The SBREFA amended the Regulatory Flexibility Act to require Federal agencies to provide a statement of the factual basis for certifying that a rule will not have a significant economic impact on a substantial number of small entities.

NHTSA has considered the effects of this rulemaking action under the Regulatory Flexibility Act. As explained above, NHTSA is proposing to incorporate performance requirements and test procedures that are currently contained or referenced in the Federal Motor Carrier Safety Regulations. Those performance requirements/test procedures are based on voluntary standards adopted by the Society of Automotive Engineers. Although NHTSA proposes to incorporate the most recent versions of these SAE requirements/procedures and to apply them to brake hoses, tubing, and fittings for all motor vehicles, not just commercial motor vehicles, the agency believes that most, if not all, such hoses, tubing, and fittings are already designed to meet the most recent SAE requirements/procedures. For the remaining hoses, tubing, and fittings, estimated at up to 20 percent of all hydraulic and vacuum brake hoses manufactured each year, the agency estimates the cost of complying with these requirements to be $1.6M. Considering that the total number of hydraulic brake hose assemblies and vacuum brake hose/assemblies that would be subject to the proposed requirements is estimated to be approximately 80 million units annually, the agency estimates that the total annual effect of this proposed rule would be between zero and $1.6M. Accordingly, I hereby certify that it would not have a significant economic impact on a substantial number of small entities.

C. National Environmental Policy Act

NHTSA has analyzed this rulemaking action for the purposes of the National Environmental Policy Act. The agency has determined that implementation of this action would not have any significant impact on the quality of the human environment.

D. Executive Order 13132 (Federalism)

Executive Order 13132 requires NHTSA to develop an accountable process to ensure ''meaningful and timely input by State and local officials in the development of regulatory policies that have federalism implications.'' The Executive Order defines ''policies that have federalism implications'' to include regulations that have ''substantial direct effects on the States, on the relationship between the national government and the States, or on the distribution of power and responsibilities among the various levels of government.'' Under Executive Order 13132, NHTSA may not issue a regulation with Federalism implications, that imposes substantial direct compliance costs, and that is not required by statute, unless the Federal government provides the funds necessary to pay the direct compliance costs incurred by State and local governments, the agency consults with State and local governments, or the agency consults with State and local officials early in the process of developing the proposed regulation. NHTSA also may not issue a regulation with Federalism implications and that preempts State law unless the agency consults with State and local officials early in the process of developing the proposed regulation.

NHTSA has analyzed this rulemaking action in accordance with the principles and criteria set forth in Executive Order 13132. The agency has determined that this proposed rule would not have sufficient federalism implications to warrant consultation with State and local officials or the preparation of a federalism summary impact statement. The proposal would not have any substantial effects on the States, or on the current Federal-State relationship, or on the current distribution of power and responsibilities among the various local officials.

E. Civil Justice Reform

This proposed amendment would not have any retroactive effect. Under 49 U.S.C. 30103, whenever a Federal motor vehicle safety standard is in effect, a State may not adopt or maintain a safety standard applicable to the same aspect of performance which is not identical to the Federal standard, except to the extent that the state requirement imposes a higher level of performance and applies only to vehicles procured for the State's use. 49 U.S.C. 30161 sets forth a procedure for judicial review of final rules establishing, amending, or revoking Federal motor vehicle safety standards. That section does not require

submission of a petition for reconsideration or other administrative proceedings before parties may file suit in court.

F. Paperwork Reduction Act

Under the Paperwork Reduction Act of 1995, a person is not required to respond to a collection of information by a Federal agency unless the collection displays a valid Office of Management and Budget (OMB) control number. This proposed rule would not require any collections of information as defined by the OMB in 5 CFR part 1320.

G. National Technology Transfer and Advancement Act

Section 12(d) of the National Technology Transfer and Advancement Act of 1995 (NTTAA), Public Law 104–113, section 12(d) (15 U.S.C. 272) directs NHTSA to use voluntary consensus standards in its regulatory activities unless doing so would be inconsistent with applicable law or otherwise impractical. Voluntary consensus standards are technical standards (*e.g.*, materials specifications, test methods, sampling procedures, and business practices) that are developed or adopted by voluntary consensus standards bodies, such as the Society of Automotive Engineers (SAE). The NTTAA directs the agency to provide Congress, through the OMB, explanations when we decide not to use available and applicable voluntary consensus standards.

The proposed changes that NHTSA is proposing are based on voluntary consensus standards adopted by the Society of Automotive Engineers. Accordingly, this proposed rule is in compliance with Section 12(d) of NTTAA.

H. Unfunded Mandates Reform Act

Section 202 of the Unfunded Mandates Reform Act of 1995 (UMRA) requires Federal agencies to prepare a written assessment of the costs, benefits, and other effects of proposed or final rules that include a Federal mandate likely to result in the expenditure by State, local or tribal governments, in the aggregate, or by the private sector, of more than $100 million in any one year (adjusted for inflation with base year of 1995). Before promulgating a rule for which a written statement is needed, section 205 of the UMRA generally requires NHTSA to identify and consider a reasonable number of regulatory alternatives and adopt the least costly, most cost-effective, or least burdensome alternative that achieves the objectives of the rule. The provisions of section 205 do not apply when they are inconsistent with applicable law. Moreover, section 205 allows NHTSA to adopt an alternative other than the least costly, most cost-effective or least burdensome alternative if the agency publishes with the final rule an explanation why that alternative was not adopted.

This proposed rule would not result in the expenditure by State, local, or tribal governments, in the aggregate, or by the private sector of more than $100 million annually. The estimated cost of complying with the proposed requirements is estimated to be between zero and $1.6M annually. Accordingly, the agency has not prepared an Unfunded Mandates assessment.

I. Plain Language

Executive Order 12866 requires each agency to write all rules in plain language. Application of the principles of plain language includes consideration of the following questions:

—Have we organized the material to suit the public's needs?
—Are the requirements in the rule clearly stated?
—Does the rule contain technical language or jargon that is not clear?
—Would a different format (grouping and order of sections, use of headings, paragraphing) make the rule easier to understand?
—Would more (but shorter) sections be better?
—Could we improve clarity by adding tables, lists, or diagrams?
—What else could we do to make this rulemaking easier to understand?

If you have any responses to these questions, please include them in your comments on this NPRM.

J. Regulation Identifier Number (RIN)

The Department of Transportation assigns a regulation identifier number (RIN) to each regulatory action listed in the Unified Agenda of Federal Regulations. The Regulatory Information Service Center publishes the Unified Agenda in April and October of each year. You may use the RIN contained in the heading at the beginning of this document to find this action in the Unified Agenda.

K. Comments

How Do I Prepare and Submit Comments?

Your comments must be written and in English. To ensure that your comments are correctly filed in the Docket, please include the docket number of this document in your comments.

Your comments must not be more than 15 pages long. (49 CFR 553.21). We established this limit to encourage you to write your primary comments in a concise fashion. However, you may attach necessary additional documents to your comments. There is no limit on the length of the attachments.

Please submit two copies of your comments, including the attachments, to Docket Management at the address given above under **ADDRESSES**.

You may also submit your comments to the docket electronically by logging onto the Dockets Management System Web site at *http://dms.dot.gov.* Click on ''Help & Information'' or ''Help/Info'' to obtain instructions for filing the document electronically.

How Can I Be Sure That My Comments Were Received?

If you wish Docket Management to notify you upon its receipt of your comments, enclose a self-addressed, stamped postcard in the envelope containing your comments. Upon receiving your comments, Docket Management will return the postcard by mail.

How Do I Submit Confidential Business Information?

If you wish to submit any information under a claim of confidentiality, you should submit three copies of your complete submission, including the information you claim to be confidential business information, to the Chief Counsel, NHTSA, at the address given above under **FOR FURTHER INFORMATION CONTACT**. In addition, you should submit two copies, from which you have deleted the claimed confidential business information, to Docket Management at the address given above under **ADDRESSES.** When you send a comment containing information claimed to be confidential business information, you should include a cover letter setting forth the information specified in our confidential business information regulation. (49 CFR part 512)

Will the Agency Consider Late Comments?

We will consider all comments that Docket Management receives before the close of business on the comment closing date indicated above under **DATES**. To the extent possible, we will also consider comments that Docket Management receives after that date. If Docket Management receives a comment too late for us to consider it in developing a final rule (assuming that one is issued), we will consider that comment as an informal suggestion for future rulemaking action.

How Can I Read the Comments Submitted by Other People?

You may read the comments received by Docket Management at the address given above under **ADDRESSES.** The hours of the Docket are indicated above in the same location.

You may also see the comments on the Internet. To read the comments on the Internet, take the following steps:

1. Go to the Docket Management System (DMS) Web page of the Department of Transportation (*http://dms.dot.gov/*)

2. On that page, click on ''search.''

3. On the next page (*http://dms.dot.gov/search/*), type in the four-digit docket number shown at the beginning of this document. Example: If the docket number were ''NHTSA–1998–1234'', you would type ''1234''. After typing the docket number, click on ''search.''

4. On the next page, which contains docket summary information for the docket you selected, click on the desired comments. You may download the comments. Although the comments are imaged documents, instead of word processing documents, the ''pdf'' versions of the documents are word searchable.

Please note that even after the comment closing date, we will continue to file relevant information in the Docket as it becomes available. Further, some people may submit late comments. Accordingly, we recommend that you periodically check the Docket for new material.

List of Subjects in 49 CFR Part 571

Imports, Motor vehicle safety, Motor vehicles, Rubber and rubber products, and Tires.

In consideration of the foregoing, NHTSA proposes to amend 49 CFR part 571 as follows:

PART 571—FEDERAL MOTOR VEHICLE SAFETY STANDARDS

1. The authority for part 571 would continue to read as follows:

Authority: 49 U.S.C. 322, 30111, 30115, 30166, and 30177; delegation of authority at 49 CFR 1.50.

2. Section 571.106 would be amended by:

a. Adding a new definition to paragraph S4,

b. Revising paragraph (b) of S5.2.2,

c. Revising paragraph (b) of S5.2.4,

d. Revising paragraphs S5.3 through S5.3.5,

e. Revising paragraphs S5.3.9 and S5.3.11,

f. Adding paragraphs S5.3.12 and S5.3.13,

g. Revising paragraph (c) of S6.2,

h. Revising paragraphs S6.4 and S6.4.2,

i. Revising paragraph (b) of S6.8.2,

j. Redesignating paragraphs S6.9, S6.9.1, S6.9.2, and S6.9.3 as paragraphs S6.11, S6.11.1, S6.11.2, and S6.11.3 and revising redesignated paragraph S6.11 and paragraph (c) of redesignated S6.11.3,

k. Adding paragraphs S6.9 through S6.9.2,

l. Adding paragraphs S6.10 through S6.10.2,

m. Adding paragraph S6.12,

n. Revising paragraphs (b), (d), and (e) of S7.2.1,

o. Revising Table III,

p. Revising paragraphs (b) and (d) of S7.2.2,

q. Revising paragraphs S7.3 and S7.3.1,

r. Revising paragraph S7.3.3,

s. Revising Table IV,

t. Revising paragraphs S7.3.6 through S7.3.11,

u. Adding paragraph S7.3.14,

v. Revising paragraphs (c) and (d) of S8.2,

w. Revising paragraph (b) of S8.3.2,

x. Revising the heading of paragraph S8.6,

y. Revising paragraph S8.7,

z. Adding paragraphs S8.7.1 and S8.7.2,

aa. Revising paragraph S8.8,

bb. Revising paragraph S8.9, introductory text,

cc. Adding paragraphs S8.13 through S8.15,

dd. Revising paragraphs S9.2 through S9.2.3,

ee. Revising paragraphs S9.2.7 and S9.2.8,

ff. Removing paragraph S9.2.9,

gg. Redesignating paragraphs S9.2.10 and S9.2.11 as paragraphs S9.2.9 and S9.2.10,

hh. Revising paragraphs S10.1 and S10.2,

ii. Revising paragraphs S10.6(a) and S10.7,

jj. Redesignating Figure 3 as Figure 6,

kk. Removing paragraph S10.8,

ll. Redesignating paragraphs S10.9, S10.9.1, S10.9.2, and S10.10 as paragraphs S10.8, S10.8.1, S10.8.2, and S10.9,

mm. Revising paragraph (b) of newly redesignated paragraph S10.8.2,

nn. Redesignating Figure 4 as Figure 7 and adding it at the end of paragraph S10.8.2(b),

oo. Adding Figure 4,

pp. Adding Figure 5,

qq. Adding Figure 8,

rr. Adding Figure 9,

ss. Adding paragraph S10.10,

tt. Redesignating paragraphs S11, S11.1, S11.2, and S11.3 as paragraphs S13, S13.1, S13.2, and S13.3,

uu. Adding paragraphs S11 through S11.3.24,

vv. Adding paragraphs S12 through S12.27,

ww. Revising newly redesignated paragraphs S13 and S13.2, and

xx. Adding paragraph S13.4.

The additions and revisions to § 571.106 would read as follows:

§ 571.106 Standard No. 106; Brake hoses.

* * * * *

S4. *Definitions.*

* * * * *

Preformed means a brake hose that is manufactured with permanent bends and is shaped to fit a specific vehicle without further bending.

* * * * *

S5. *Requirements—Hydraulic brake hose, brake hose assemblies, and brake hose end fittings.*

* * * * *

S5.2.2 * * *

* * * * *

(b) A designation that identifies the manufacturer of the hose, which shall be filed in writing with: Office of Vehicle Safety Compliance, Equipment Division NVS–222, National Highway Traffic Safety Administration, 400 Seventh St. S.W., Washington, DC 20590. The marking may consist of a designation other than block capital letters required by S5.2.2.

* * * * *

S5.2.4 * * *

* * * * *

(b) A designation that identifies the manufacturer of the hose assembly, which shall be filed in writing with: Office of Vehicle Safety Compliance, Equipment Division NVS–222, National Highway Traffic Safety Administration, 400 Seventh St. S.W., Washington, DC 20590. The designation may consist of block capital letters, numerals, or a symbol.

* * * * *

S5.3 *Test Requirements.* A hydraulic brake hose assembly or appropriate part thereof shall be capable of meeting any of the requirements set forth under this heading, when tested under the conditions of S13 and the applicable procedures of S6. However, a particular hose assembly or appropriate part thereof need not meet further requirements after having been subjected to and having met the constriction requirement (S5.3.1) and any one of the requirements specified in S5.3.2 through S5.3.13.

S5.3.1 *Constriction.* Except for that part of an end fitting which does not contain hose, every inside diameter of any section of a hydraulic brake hose

assembly shall be not less than 64 percent of the nominal inside diameter of the brake hose. (S6.12)

S5.3.2 *Expansion and burst strength.* The maximum expansion of a hydraulic brake hose assembly at 1,000 psi and 1,500 psi shall not exceed the values specified in Table I (S6.1). The hydraulic brake hose assembly shall then withstand water pressure of 4,000 psi for 2 minutes without rupture, and shall not rupture at less than 7,000 psi for a ⅛ inch, 3 mm, or smaller diameter hose, or at less than 5,000 psi for a 3⁄16 inch, 4 mm, or larger diameter hose (S6.2).

* * * * *

S5.3.4 *Tensile strength.* A hydraulic brake hose assembly shall withstand a pull of 325 pounds without separation of the hose from its end fittings during a slow pull test, and shall withstand a pull of 370 pounds without separation of the hose from its end fittings during a fast pull test (S6.4).

S5.3.5 *Water absorption and tensile strength.* A hydraulic brake hose assembly, after immersion in water for 70 hours (S6.5), shall withstand a pull of 325 pounds without separation of the hose from its end fittings during a slow pull test, and shall withstand a pull of 370 pounds without separation of the hose from its end fittings during a fast pull test (S6.4).

* * * * *

S5.3.9 *Brake fluid compatibility, constriction, and burst strength.* Except for brake hose assemblies designed for use with mineral or petroleum-based brake fluids, a hydraulic brake hose assembly shall meet the constriction requirement of S5.3.1 after having been subjected to a temperature of 248 °F for 70 hours while filled with SAE RM–66–05 Compatibility Fluid, as described in Appendix B of SAE Standard J1703 JAN 1995, ''Motor Vehicle Brake Fluid.'' It shall then withstand water pressure of 4,000 psi for 2 minutes and thereafter shall not rupture at less than 5,000 psi (S6.2).

* * * * *

S5.3.11 *Dynamic ozone test.* A hydraulic brake hose shall not show cracks visible without magnification after having been subjected to a 48-hour dynamic ozone test (S6.9).

S5.3.12 *High temperature impulse test.* A brake hose assembly tested under the conditions in S6.10:

(a) shall withstand pressure cycling for 150 cycles, at 295 °F without leakage;

(b) shall not leak during a 2-minute, 4,000 psi pressure hold test, and;

(c) shall not burst at a pressure less than 5,000 psi.

S5.3.13 *End fitting corrosion resistance.* After 24 hours of exposure to salt spray, a hydraulic brake hose end fitting shall show no base metal corrosion on the end fitting surface except where crimping or the application of labeling information has caused displacement of the protective coating (S6.11).

S6. *Test procedures—Hydraulic brake hose, brake hose assemblies, and brake hose end fittings.*

* * * * *

S6.2 *Burst strength test.* (a) * * *

(c) After 2 minutes at 4,000 psi, increase the pressure at the rate of 15,000 psi per minute until the pressure exceeds 5,000 psi for a hose of 3⁄16, 4 mm, or larger diameter, or 7,000 psi for a hose of ⅛ inch, 3 mm, or smaller diameter.

* * * * *

S6.4 *Tensile strength test.* Utilize a tension testing machine conforming to the requirements of American Society for Testing and Materials (ASTM) Standard Practices for Force Verification of Testing Machines, Designation E4–99, and provided with a recording device to give the total pull in pounds.

* * * * *

S6.4.2 *Operation.*

(a) Conduct the slow pull test by applying tension at a rate of 1 inch per minute travel of the moving head until separation occurs.

(b) Conduct the fast pull test by applying tension at a rate of 2 inches per minute travel of the moving head until separation occurs.

* * * * *

S6.8.2 *Exposure to ozone.* (a) * * *

(b) Immediately thereafter, condition the hose on the cylinder for 70 hours in an exposure chamber having an ambient air temperature of 104 °F during the test and containing air mixed with ozone in the proportion of 100 parts of ozone per 100 million parts of air by volume.

* * * * *

S6.9 *Dynamic Ozone Test.*

S6.9.1 *Apparatus.* Utilize a test apparatus shown in Figure 3 which is constructed so that:

(a) It has a fixed pin with a vertical orientation over which one end of the brake hose is installed.

(b) It has a movable pin that is oriented 30 degrees from vertical, with the top of the movable pin angled towards the fixed pin. The moveable pin maintains its orientation to the fixed pin throughout its travel in the horizontal plane. The other end of the brake hose is installed on the movable pin.

Figure 3. Dynamic Ozone Test Apparatus

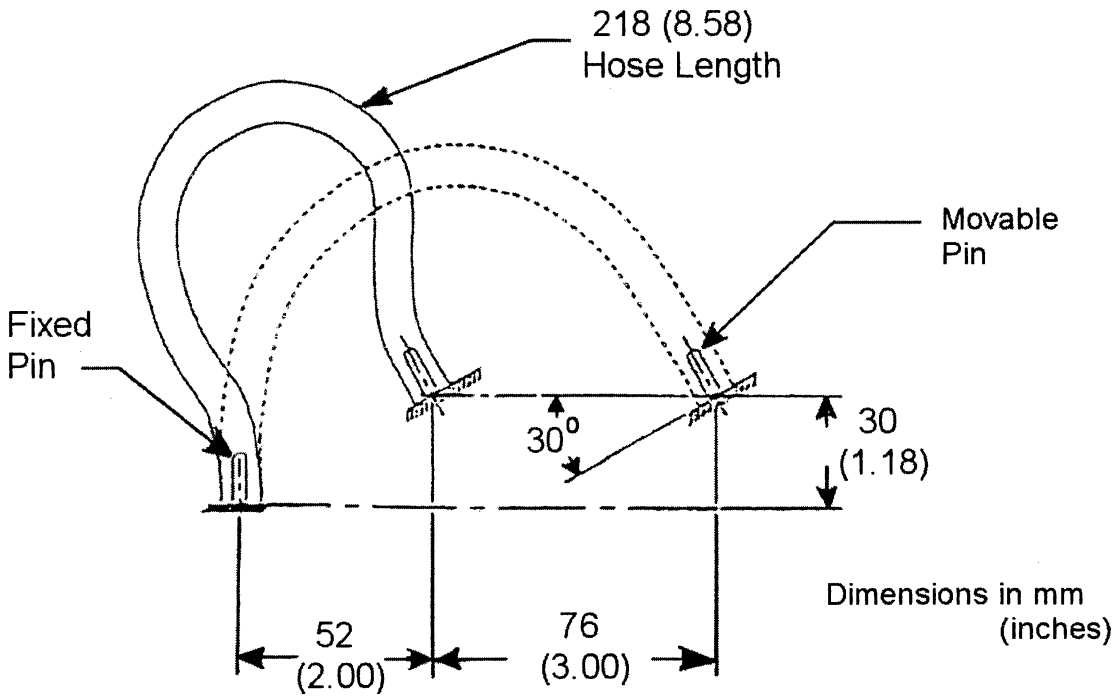

S6.9.2 *Preparation.*

(a) Precondition the hose assembly by laying it on a flat surface in an unstressed condition, at room temperature, for 24 hours.

(b) Cut the brake hose assembly to a length of 8.6 inches (218 mm), such that no end fittings remain on the cut hose.

(c) Mount the brake hose onto the test fixture by fully inserting the fixture pins into each end of the hose. Secure the hose to the fixture pins using a band clamp at each end of the hose.

(d) Place the test fixture into an ozone chamber.

(e) Stabilize the atmosphere in the ozone chamber so that the ambient temperature is 104 °F and the air mixture contains air mixed with ozone in the proportion of 100 parts of ozone per 100 million parts of air by volume. This atmosphere is to remain stable throughout the remainder of the test.

(f) Begin cycling the movable pin at a rate of 0.3 Hz. Continue the cycling for 48 hours.

(g) At the completion of 48 hours of cycling, remove the test fixture from the ozone chamber. Without removing the hose from the test fixture, visually examine the hose for cracks without magnification, ignoring areas immediately adjacent to or within the area covered by the band clamps. Examine the hose with the movable pin at any point along its travel.

S6.10 *High temperature impulse test.*

S6.10.1 *Apparatus.*

(a) A pressure cycling machine to which one end of the brake hose assembly can be attached, with the entire hose assembly installed vertically inside of a circulating air oven. The machine is capable of increasing the pressure in the hose from zero psi to 1600 psi, and decreasing the pressure in the hose from 1600 psi to zero psi, within 2 seconds.

(b) A circulating air oven that can reach a temperature of 295 °F within 30 minutes, and that can maintain a constant 295 °F thereafter, with the brake hose assembly inside of the oven and attached to the pressure cycling machine.

(c) A burst test apparatus to conduct testing specified in S6.2.

S6.10.2 *Preparation.*

(a) Connect one end of the hose assembly to the pressure cycling machine and plug the other end of the hose. Fill the pressure cycling machine and hose assembly with SAE RM–66–05 Compatibility Fluid, as described in Appendix B of SAE Standard J1703 JAN 1995, and bleed all gases from the system.

(b) Place the brake hose assembly inside of the circulating air oven in a vertical position. Increase the oven temperature to 295 °F and maintain this temperature throughout the pressure cycling test.

(c) During each pressure cycle, the pressure in the hose is increased from zero psi to 1600 psi and held constant for 1 minute, then the pressure is decreased from 1600 psi to zero psi and held constant for 1 minute. Perform 150 pressure cycles on the brake hose assembly.

(d) Remove the brake hose assembly from the oven, disconnect it from the pressure cycling machine, and drain the fluid from the hose. Cool the brake hose assembly at room temperature for 45 minutes.

(e) Wipe the brake hose using acetone to remove residual Compatibility Fluid. Conduct the burst strength test in S6.2.

S6.11 *End fitting corrosion test.* Utilize the apparatus described in ASTM B117–97, ''Standard Practice for Operating Salt Spray (Fog) Apparatus''.

* * * * *

S6.11.3 *Operation.* * * *

* * * * *

(c) Upon completion, remove the salt deposit from the surface of the hose by washing gently or dipping in clean running water not warmer than 100 °F and then drying immediately.

* * * * *

S6.12 *Constriction Test.*

(a) Utilize a plug gauge as shown in Figure 4. Diameter ''A'' is equal to 64 percent of the nominal inside diameter of the hydraulic brake hose being tested.

(b) Brake hose assemblies that are to be used for additional testing have constriction testing only at each end fitting. Other brake hose assemblies may be cut into three inch lengths to permit constriction testing of the entire assembly. Hose assemblies with end fittings that do not permit entry of the gauge (*e.g.*, restrictive orifice or banjo fitting) are cut three inches from the point at which the hose terminates in the end fitting and then tested from the cut end.

(c) Hold the brake hose in a straight position and vertical orientation.

(d) Place the spherical end of the plug gauge just inside the hose or end fitting. If the spherical end will not enter the hose or end fitting using no more force than gravity acting on the plug gauge, this constitutes failure of the constriction test.

(e) Release the plug gauge. Within three seconds, the plug gauge shall fall under the force of gravity alone up to the handle of the gauge. If the plug gauge does not fully enter the hose up to the handle of the gauge within three seconds, this constitutes failure of the constriction test.

Figure 4. Constriction Test Plug Gauge

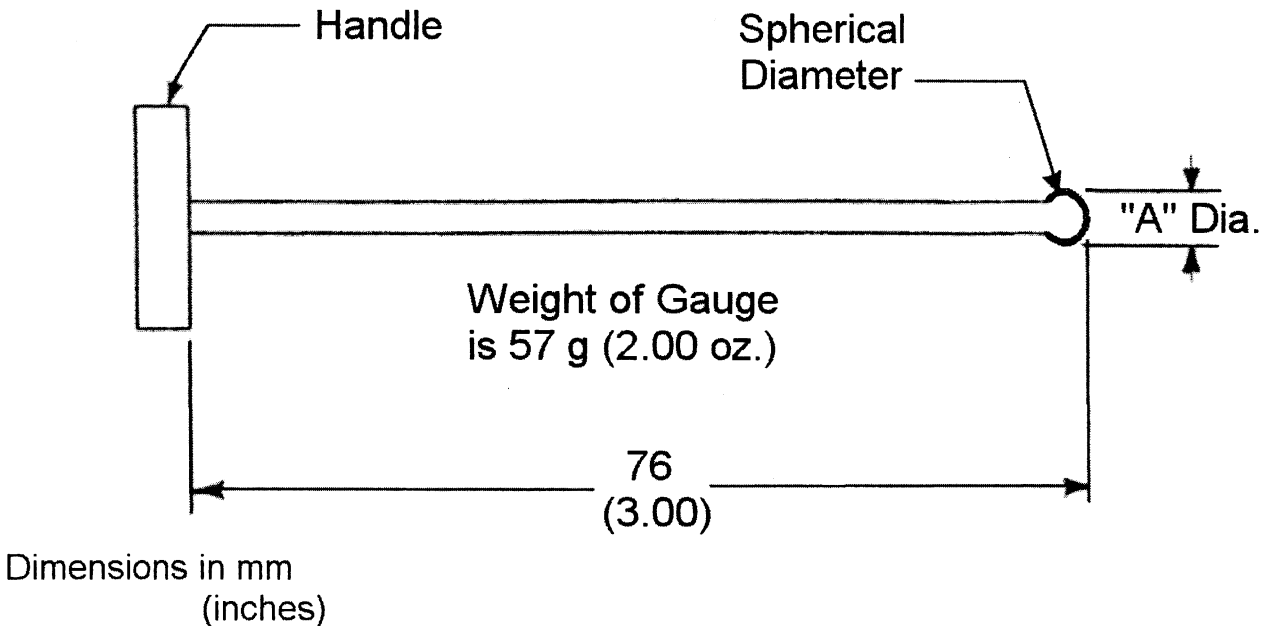

S7. *Requirements—Air brake hose, brake hose assemblies, and brake hose end fittings.*

* * * * *

S7.2.1 *Hose.* * * *

* * * * *

(b) A designation that identifies the manufacturer of the hose, which shall be filed in writing with: Office of Vehicle Safety Compliance, Equipment Division NVS–222, National Highway Traffic Safety Administration, 400 Seventh St. SW., Washington, DC 20590. The designation may consist of block capital letters, numerals, or a symbol.

* * * * *

(d) The nominal inside diameter of the hose expressed in inches or fractions of inches or in millimeters. The abbreviation ''mm'' shall follow hose sizes that are expressed in millimeters. (Examples: ⅜, ½ (½SP in the case of ½ inch special air brake hose), 4mm, 6mm.)

(e) The letter ''A'' shall indicate intended use in air brake systems. In the case of a hose intended for use in a reusable assembly, ''AI'' or ''AII'' shall indicate Type I or Type II dimensional characteristics of the hose as described in Table III. A hose that is intended to be used with more than one type of end fitting may be labeled with multiple designations. (Examples: AI–AII, AI & AII.)

TABLE III.—AIR BRAKE HOSE DIMENSIONS FOR REUSABLE ASSEMBLIES

Size, inches	Inside diameter tolerance, inches	Type I outside diameter, inches		Type II outside diameter, inches	
		Minimum	Maximum	Minimum	Maximum
3/16	+0.026 −0.000	0.472	0.510	0.500	0.539
1/4	+0.031 −0.000	0.535	0.573	0.562	0.602
5/16	+0.031 −0.000	0.598	0.636	0.656	0.695
3/8	±0.023	0.719	0.781	0.719	0.781
7/16	±0.031	0.781	0.843	0.781	0.843
13/32	+0.031 −0.000	0.714	0.760	0.742	0.789
1/2	+0.039 −0.000	0.808	0.854	0.898	0.945
5/8	+0.042 −0.000	0.933	0.979	1.054	1.101
1/2 special	±0.031	0.844	0.906	0.844	0.906

S7.2.2 *End fittings.* * * *

* * * * *

(b) A designation that identifies the manufacturer of that component of the fitting, which shall be filed in writing with: Office of Vehicle Safety Compliance, Equipment Division NVS–222, National Highway Traffic Safety Administration, 400 Seventh St. SW., Washington, DC 20590. The designation may consist of block capital letters, numerals, or a symbol.

* * * * *

(d) The nominal inside diameter of the hose to which the fitting is properly attached expressed in inches or fractions of inches or in millimeters. (*See* examples in S7.2.1(d).) The abbreviation ''mm'' shall follow hose sizes that are expressed in millimeters.

* * * * *

S7.3 *Test requirements.* Each air brake hose assembly or appropriate part thereof shall be capable of meeting any of the requirements set forth under this heading, when tested under the conditions of S13 and the applicable procedures of S8. However, a particular hose assembly or appropriate part thereof need not meet further requirements after having met the constriction requirement (S7.3.1) and then having been subjected to any one of the requirements specified in S7.3.2 through S7.3.14.

S7.3.1 *Constriction.* Every inside diameter of any section of an air brake hose assembly shall not be less than 66 percent of the nominal inside diameter of the brake hose. (S8.15)

* * * * *

S7.3.3 *Low temperature resistance.* The inside and outside surfaces of an air brake hose shall not show cracks as a result of conditioning at minus 40 °F for 70 hours when bent around a cylinder having the radius specified in Table IV for the size of hose tested (S8.2).

TABLE IV.—AIR BRAKE HOSE DIAMETERS AND TEST CYLINDER RADII

Nominal hose diameter, inches [1]	1/8	3/16	1/4	5/16	3/8	13/32	7/16, 1/2	5/8
Nominal hose diameter, millimeters [1]	3	4, 5	6	8	.....	10	12	16
Test cylinder radius for high temperature resistance test and adhesion test for wire reinforced hose, inches (mm)	1 (25)	1 (25)	1½ (38)	1¾ (44)	1¾ (44)	1⅞ (48)	2 (51)	2½ (64)
Test cylinder radius for low temperature resistance test and ozone test, inches (mm)	1½ (38)	2 (51)	2½ (64)	3 (76)	3 (89)	3½ (89)	4 (102)	4½ (114)

[1] These sizes are listed to provide test values for brake hose manufactured in these sizes. They do not represent conversions.

* * * * *

S7.3.6 *Length Change.* An airbrake hose shall not contract in length more than 7 percent nor elongate more than 5 percent when subjected to air pressure of 200 psi (S8.5).

S7.3.7 *Adhesion.* (a) Except for hose reinforced by wire, an air brake hose shall withstand a tensile force of 8 pounds per inch of length before separation of adjacent layers (S8.6).

(b) An air brake hose reinforced by wire shall permit a steel ball to roll freely along the entire length of the inside of the hose when the hose is subjected to a vacuum of 25 inches of Hg and bent around a test cylinder (S8.13).

S7.3.8 *Flex strength and air pressure leakage.* An air brake hose assembly of the length specified in Table 5, when subjected to a flex test and internal pressure cycling, shall be capable of having its internal pressure increased from zero to 140 psi within 2 minutes with pressurized air supplied through an orifice (S8.7).

S7.3.9 *Corrosion resistance and burst strength.* An air brake hose assembly exposed to salt spray shall not rupture when exposed to hydrostatic pressure of 900 psi (S8.8).

S7.3.10 *Tensile strength.* An air brake hose assembly shall withstand, without separation of the hose from its end fittings, a pull of 250 pounds if it is ¼ inch or less or 6 mm or less in nominal inside diameter, or a pull of 325 pounds if it is larger than ¼ inch or 6 mm in nominal inside diameter (S8.9).

S7.3.11 *Water absorption and tensile strength.* After immersion in distilled water for 70 hours (S8.10), an air brake hose assembly shall withstand, without separation of the hose from its end fittings, a pull of 250 pounds if it is ¼ inch or less or 6 mm or less in nominal inside diameter, or a pull of 325 pounds if it is larger than ¼ inch or 6 mm in nominal inside diameter (S8.9).

* * * * *

S7.3.14 *Ozone resistance.* An air brake hose assembly shall not show cracks visible under 7-power magnification after exposure to ozone for 70 hours at 104 °F when bent around a test cylinder of the radius specified in Table IV for the size of hose tested (S8.14).

S8. *Test procedures—Air brake hose, brake hose assemblies, and brake hose end fittings.*

* * * * *

S8.2 *Low temperature resistance test.*

* * * * *

(c) With the hose and cylinder at minus 40 °F, bend the hose 180 degrees around the cylinder at a steady rate in a period of 3 to 5 seconds. Remove the hose from the test cylinder and visibly examine the exterior of the hose for cracks without magnification.

(d) Allow the hose to warm at room temperature for 2 hours. All reusable end fittings are removed from the hose. All permanently-attached end fittings are cut away from the hose. Cut through one wall of the hose longitudinally along its entire length. Unfold the hose to permit examination of the interior surface. Visibly examine the interior of the hose for cracks without magnification.

* * * * *

S8.3.2 *Measurement.*

* * * * *

(b) Immerse each specimen in ASTM IRM 903 oil for 70 hours at 212 °F. and then cool in ASTM IRM 903 oil at room temperature for 30 to 60 minutes.

* * * * *

S8.6 *Adhesion test for air brake hose not reinforced by wire.*

* * * * *

S8.7 *Flex strength and air pressure test.*

S8.7.1 *Apparatus.* A flex testing machine with a fixed hose assembly attachment point and a movable hose assembly attachment point, which meets the dimensional requirements of Figure 5 for the size of hose being tested. The attachment points connect to the end fittings on the hose assembly without leakage and, after the hose assembly has been installed for the flex test, are restrained from rotation. The movable end has a linear travel of 6 inches and a cycle rate of 100 cycles per minute. The machine is capable of increasing the air pressure in the hose assembly from zero to 150 psi within 2 seconds, and decreasing the air pressure

in the hose assembly from 150 to zero psi within 2 seconds.

Figure 5. Flex Test Apparatus

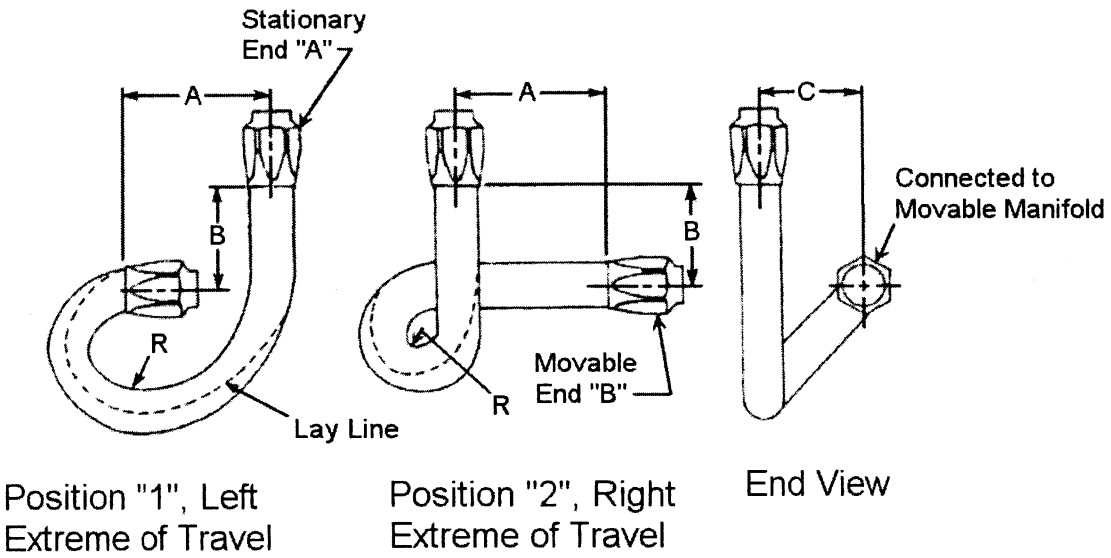

TABLE ACCOMPANYING FIGURE 5

Free hose length 27 (1.6mm)	Hose I.D., in (mm)	Dimensions							
		Position "1"				Position "2"			
		"A"	"B"	"C"	"R" [a]	"A"	"B"	"C"	"R" [a]
10 in (254 mm).	3/16 (4.8); 1/4 (6.3)	3 in (76 mm)	2.75 in (70 mm).	3.75 in (95 mm).	1.4 in (34 mm).	3 in (76 mm)	2.75 in (70 mm).	3.75 in (95 mm).	1.2 in 30 mm).
11 in (279 mm).	5/16 (7.9); 3/8 (9.7); 13/32 (10.4).	3 in (76 mm)	3.5 in (8.9 mm).	4/5 in (114 mm).	1.7 in (43 mm).	3 in (76 mm)	3.5 in (89 mm).	4.5 in (114 mm).	1.3 in (33 mm).
14 in (355 mm).	7/16 (11.2); 1/2 (12.7; (5/8 (16.0).	3 in (76 mm)	4 in (102 mm).	4 in (127 mm).	2.2 in (56 mm).	3 in (76 mm)	4 in (102 mm).	5 in (127 mm).	1.8 in (46 mm).

[a] This is an approximate average radius.

8.7.2 *Preparation.* (a) Lay the hose material on a flat surface in an unstressed condition. Apply a permanent marking line along the centerline of the hose on the uppermost surface.

(b) Prepare the hose assembly with a free length as shown in Figure 5. The end fittings shall be attached according to the end fitting manufacturer's instructions.

(c) Plug the ends of the hose assembly and conduct the salt spray test in S6.9 using an air brake hose assembly. Remove the plugs from the end fittings.

(d) Within 168 hours of completion of the salt spray test, expose the hose assembly to an air temperature of 212 °F for 70 hours, with the hose in a straight position. Remove the hose and cool it at room temperature for 2 hours. Within 166 hours, subject the hose to the flexure test in (e).

(e) Install the hose assembly on the flex testing machine as follows. With the movable hose attachment point at the mid point of its travel, attach one end of the hose to the movable attachment point with the marked line on the hose in the uppermost position. Attach the other end of the hose to the fixed attachment point allowing the hose to follow its natural curvature.

(f) Cycle the air pressure in the hose by increasing the pressure in the hose from zero psi to 150 psi and holding constant for one minute, then decreasing the pressure from 150 psi to zero psi and holding constant for one minute. Continue the pressure cycling for the duration of the flex testing. Begin the flex testing by cycling the movable attachment point through 6 inches of travel at a rate of 100 cycles per minute. Stop the flex testing and pressure cycling after 1 million flex cycles have been completed.

(g) Install an orifice with a hole diameter of 0.0625 inches and a thickness of 0.032 inches in the air pressure supply line to the hose assembly. Provide a gauge or other means to measure air pressure in the hose assembly. Regulate the supply air pressure to the orifice to 150 psi.

(h) Apply 150 psi air pressure to the orifice. After 2 minutes have elapsed, measure the air pressure in the brake hose assembly, while pressurized air continues to be supplied through the orifice.

S8.8 *Corrosion resistance and burst strength test.* (a) Conduct the test specified in S6.9 using an air brake hose assembly. Remove the plugs from the ends of the hose assembly.

(b) Fill the hose assembly with water, allowing all gases to escape. Apply water pressure at a uniform rate of increase of approximately 1,000 psi per minute until the hose ruptures.

S8.9 *Tensile strength test.* Utilize a tension testing machine conforming to the requirements of American Society for Testing and Materials (ASTM) Standard Practices for Force Verification of Testing Machines, Designation E4–99, and provided with a recording device to register total pull in pounds.

* * * * *

S8.13 *Adhesion test for air brake hose reinforced by wire.* (a) Place a steel ball with a diameter equal to 75 percent of the nominal inside diameter of the hose being tested inside of the hose. Plug one end of the hose. Attach the

other end of the hose to a source of vacuum.

(b) Subject the hose to a vacuum of 25 inches of Hg for five minutes. With the vacuum still applied to the hose, bend the hose 180 degrees around a test cylinder of the size specified in Table IV for the hose being tested. At the location of this bend, bend the hose 180 degrees around the test cylinder in the opposite direction.

(c) With the vacuum still applied to the hose, return the hose to a straight position. Attempt to roll the ball inside the hose using gravity from one end of the hose to the other end.

S8.14 *Ozone test.* Conduct the test in S6.8 on an air brake hose assembly except use the test cylinder radius specified in Table IV for the size of hose tested.

S8.15 *Constriction test.*

(a) Utilize a plug gauge as shown in Figure 4. Diameter ''A'' shall be equal to 66 percent of the nominal inside diameter of the air brake hose being tested.

(b) Air brake hose assemblies that are to be used for additional testing have constriction testing only at each end fitting. Other hose assemblies may be cut into three inch lengths to permit constriction testing of the entire assembly.

(c) Hold the brake hose in a straight position and vertical orientation.

(d) Place the spherical end of the plug gauge just inside the hose or end fitting. If the spherical end will not enter the hose or end fitting using no more force than gravity acting on the plug gauge, this constitutes failure of the constriction test.

(e) Release the plug gauge. Within three seconds, the plug gauge shall fall under the force of gravity alone up to the handle of the gauge. If the plug gauge does not fully enter the hose up to the handle of the gauge within three seconds, this constitutes failure of the constriction test.

S9. *Requirements—Vacuum brake hose, brake hose assemblies, and brake hose end fittings.*

* * * * *

S9.2 *Test requirements.* Each vacuum brake hose assembly or appropriate part thereof shall be capable of meeting any of the requirements set forth under this heading, when tested under the conditions of S13 and the applicable procedures of S10. However, a particular hose assembly or appropriate part thereof need not meet further requirements after having met the constriction requirement (S9.2.1) and then having been subjected to any one of the requirements specified in S9.2.2 through S9.2.10.

S9.2.1 *Constriction.* Except for that part of an end fitting which does not contain hose, every inside diameter of any section of a vacuum brake hose assembly shall be not less than 75 percent of the nominal inside diameter of the hose if for heavy duty, or 70 percent of the nominal inside diameter of hose if for light duty. (S10.10)

S9.2.2 *High temperature resistance.* A vacuum brake hose tested under the conditions specified in S10.1:

(a) shall not have collapse of the outside diameter exceeding 10 percent of the initial outside diameter for a heavy-duty vacuum brake hose, or exceeding 15 percent of the initial outside diameter for a light-duty vacuum brake hose;

(b) shall not show external cracks, charring, or disintegration visible without magnification, and;

(c) shall not leak when subjected to a hydrostatic pressure test.

S9.2.3 *Low temperature resistance.* A vacuum brake hose tested under the conditions specified in S10.2 shall

(a) not show cracks visible without magnification after conditioning at minus 40 °F for 70 hours when bent around a cylinder having the radius specified in Table V for the size hose tested, and;

(b) not leak when subjected to a hydrostatic pressure test.

* * * * *

S9.2.7 *Bend.* The collapse of the outside diameter of a vacuum brake hose, other than a preformed vacuum brake hose, at the middle point of the test length when bent until the ends touch shall not exceed the values given in Table V for the size of hose tested. (S10.6).

* * * * *

S9.2.8 *Swell and Adhesion.* Following exposure to Reference Fuel B, every inside diameter of any section of a vacuum brake hose shall not be less than 75 percent of the nominal inside diameter of the hose if for heavy duty, or 70 percent of the nominal inside diameter of the hose if for light duty. The vacuum brake hose shall show no leakage in a vacuum test of 26 inches of Hg for 10 minutes. A vacuum hose that is constructed of two or more layers shall withstand a force of 8 pounds per inch of length before separation of adjacent layers. (S10.7).

S9.2.9 *Deformation.* A vacuum brake hose shall return to 90 percent of its original outside diameter within 60 seconds after five applications of force as specified in S10.9, except that a wire-reinforced hose need only return to 85 percent of its original outside diameter. In the case of heavy duty hose, the first application of force shall not exceed a peak value of 70 pounds, and the fifth application of force shall reach a peak value of at least 40 pounds. In the case of light duty hose the first application of force shall not exceed a peak value of 50 pounds, and the fifth application of force shall reach a peak value of at least 20 pounds (S10.9).

S9.2.10 *End fitting corrosion resistance.* After 24 hours of exposure to salt spray, vacuum brake hose end fittings shall show no base metal corrosion of the end fitting surface except where crimping or the application of labeling information has caused displacement of the protective coating.

S10. *Test procedures—Vacuum brake hose, brake hose assemblies, and brake hose end fittings.*

S10.1 *High temperature resistance test.*

(a) Measure the initial outside diameter of the hose.

(b) Subject the hose to an internal vacuum of 26 inches of Hg at an ambient temperature of 257 °F for a period of 96 hours. Remove the hose to room temperature and atmospheric pressure.

(c) Within 5 minutes of completion of the test in (b), measure the outside diameter at the point of greatest collapse and calculate the percentage collapse based on the initial outside diameter.

(d) Cool the hose at room temperature for 5 hours. Bend the hose around a mandrel with a diameter equal to five times the initial outside diameter of the hose. Examine the exterior of the hose for cracks, charring, or disintegration visible without magnification. Remove the hose from the mandrel.

(e) Fill the hose assembly with water, allowing all gases to escape. Apply water pressure in the hose of 175 psi within 10 seconds. Maintain an internal hydrostatic pressure of 175 psi for one minute and examine the hose for visible leakage.

S10.2 *Low temperature resistance test.*

(a) Conduct the test specified in S8.2 using vacuum brake hose with the cylinder radius specified in Table V for the size of hose tested. Visually inspect the exterior of the hose for cracks without magnification.

(b) Remove the hose from the test cylinder, warm the hose at room temperature for 5 hours, and conduct the hydrostatic pressure test in 10.1(e).

* * * * *

S10.6 *Bend test.*

(a) Bend a vacuum brake hose, of the length prescribed in Table V, in the direction of its normal curvature until

the ends just touch as shown in Figure 6.

* * * * *

S10.7 *Swell and adhesion test.*

(a) Fill a specimen of vacuum brake hose 12 inches long with ASTM Reference Fuel B as described in ASTM D471–98e1 Standard Test Method for Rubber Property B Effect of Liquids.

(b) Maintain reference fuel in the hose under atmospheric pressure at room temperature for 48 hours.

(c) Remove fuel and determine that every inside diameter of any section of the brake hose is not less than 75 percent of the nominal inside diameter of the hose for heavy-duty hose and 70 percent of the nominal inside diameter of the hose for light-duty hose.

(d) Attach the hose to a source of vacuum and subject it to a vacuum of 26 inches of Hg for 10 minutes. Remove the hose from the vacuum source.

(e) For a vacuum brake hose constructed of two or more layers, conduct the test specified in S8.6 using the vacuum brake hose.

* * * * *

S10.8.2 * * *

* * * * *

(b) Apply gradually increasing force to the test specimen to compress its inside diameter to that specified in Table VI (dimension D of Figure 7) for the size of hose tested.

* * * * *

S10.10 *Constriction test.*

(a) Utilize a plug gauge is shown in Figure 4. Diameter AA'' shall be equal to 75 percent of the nominal inside diameter of the vacuum brake hose being tested if it is heavy duty, or 70 percent of the nominal inside diameter of the vacuum brake hose being tested if it is light duty.

(b) Vacuum brake hose assemblies that are to be used for additional testing have constriction testing only at each end fitting. Other hose assemblies may be cut into three inch lengths to permit constriction testing of the entire assembly. Hose assemblies with end fittings that do not permit entry of the gauge (*e.g.*, restrictive orifice) are cut three inches from the point at which the hose terminates in the end fitting and then tested from the cut end.

(c) Hold the vacuum brake hose in a straight position and vertical orientation.

(d) Place the spherical end of the plug gauge just inside the hose or end fitting. If the spherical end will not enter the hose or end fitting using no more force than gravity acting on the plug gauge, this constitutes failure of the constriction test.

(e) Release the plug gauge. Within three seconds, the plug gauge shall fall under the force of gravity alone up to the handle of the gauge. If the plug gauge does not fully enter the hose up to the handle of the gauge within three seconds, this constitutes failure of the constriction test.

S11. *Requirements—Plastic air brake tubing, plastic air brake tubing assemblies, and plastic air brake tubing end fittings.*

11.1 *Construction.* Each plastic air brake tubing assembly shall be equipped with permanently attached brake hose end fittings or reusable brake hose end fittings. Plastic air brake tubing that is constructed of one layer of material shall be designated as Type A tubing and plastic air brake tubing that is constructed of two layers of material with a reinforcing braid between the layers shall be designated as Type B tubing. Plastic air brake tubing shall conform to the dimensional requirements specified in Table VII. (S12.1)

TABLE VII.—PLASTIC AIR BRAKE TUBING DIMENSIONS

Type	Nominal tubing OD	Maximum outside diameter		Minimum outside diameter		Nominal inside diameter		Nominal wall thickness		Wall thickness tolerance	
		mm	inch	mm	inch	mm	inch	mm	inch	mm	inch
A	1/8 inch	3.25	0.128	3.10	0.122	2.01	0.079	0.58	0.023	±0.08	±0.003
A	5/32 inch	4.04	0.159	3.89	0.153	2.34	0.092	0.81	0.032	±0.08	±0.003
A	3/16 inch	4.83	0.190	4.67	0.184	2.97	0.117	0.89	0.035	±0.08	±0.003
A	1/4 inch	6.43	0.253	6.27	0.247	4.32	0.170	1.02	0.040	±0.08	±0.003
A	5/16 inch	8.03	0.316	7.82	0.308	5.89	0.232	1.02	0.040	±0.10	±0.004
B	3/8 inch	9.69	0.379	9.42	0.371	6.38	0.251	1.57	0.062	±0.10	±0.004
B	1/2 inch	12.83	0.505	12.57	0.495	9.55	0.376	1.57	0.062	±0.10	±0.004
B	5/8 inch	16.00	0.630	15.75	0.620	11.20	0.441	2.34	0.092	±0.13	±0.005
B	3/4 inch	19.18	0.755	18.92	0.745	14.38	0.566	2.34	0.092	±0.13	±0.005
A	6 mm	6.10	0.240	5.90	0.232	4.00	0.157	1.00	0.039	±0.10	±0.004
A	8 mm	8.10	0.319	7.90	0.311	6.00	0.236	1.00	0.039	±0.10	±0.004
B	10 mm	10.15	0.399	9.85	0.387	7.00	0.275	1.50	0.059	±0.15	±0.006
B	12 mm	12.15	0.478	11.85	0.466	9.00	0.354	1.50	0.059	±0.15	±0.006
B	16 mm	16.15	0.635	15.85	0.623	12.00	0.472	2.00	0.079	±0.15	±0.006

S11.2 *Labeling.*

S11.2.1 *Plastic Air Brake Tubing.* Plastic air brake tubing shall be labeled, or cut from bulk tubing that is labeled, at intervals of not more than 6 inches, measured from the end of one legend to the beginning of the next, in block capital letters and numerals at least one-eighth of an inch high, with the information listed in paragraphs (a) through (e) of this section. The information need not be present on tubing that is sold as part of a motor vehicle.

(a) The symbol DOT, constituting a certification by the hose manufacturer that the hose conforms to all applicable motor vehicle safety standards.

(b) A designation that identifies the manufacturer of the tubing, which shall be filed in writing with: Office of Vehicle Safety Compliance, Equipment Division NVS–222, National Highway Traffic Safety Administration, 400 Seventh St. S.W., Washington, DC 20590. The designation may consist of block capital letters, numerals, or a symbol.

(c) The month, day, and year, or the month and year, of manufacture, expressed in numerals. For example, 10/1/96 means October 1, 1996.

(d) The nominal outside diameter expressed in inches or fractions of inches or in millimeters followed by the letters OD. The abbreviation ''mm'' shall follow tubing sizes that are expressed in millimeters. (Examples: 3/8 OD, 6 mm OD.)

(e) The letter ''A'' shall indicate intended use in air brake systems.

S11.2.2 *End Fittings.* Except for an end fitting that is attached by

deformation of the fitting about the tubing by crimping or swaging, at least one component of each plastic air brake tubing end fitting shall be etched, embossed, or stamped in block capital letters and numerals at least one-sixteenth of an inch high with the following information:

(a) The symbol DOT, constituting a certification by the manufacturer of that component that the component conforms to all applicable motor vehicle safety standards.

(b) A designation that identifies the manufacturer of that component of the fitting, which shall be filed in writing with: Office of Vehicle Safety Compliance, Equipment Division NVS–222, National Highway Traffic Safety Administration, 400 Seventh St. S.W., Washington, DC 20590. The designation may consist of block capital letters, numerals, or a symbol.

(c) The letter ''A'' shall indicate intended use in air brake systems.

(d) The nominal outside diameter of the plastic tubing to which the fitting is properly attached expressed in inches or fractions of inches or in millimeters followed by the letters OD. The abbreviation ''mm'' shall follow tubing sizes that are expressed in millimeters. (See examples in S11.2.1(d).)

S11.2.3. *Assemblies*. Each plastic air brake tubing assembly made with end fittings that are attached by crimping or swaging, except those sold as part of a motor vehicle, shall be labeled by means of a band around the brake tubing assembly as specified in this paragraph or, at the option of the manufacturer, by means of labeling as specified in S11.2.3.1. The band may at the manufacturer's option be attached so as to move freely along the length of the assembly, as long as it is retained by the end fittings. The band shall be etched, embossed, or stamped in block capital letters, numerals or symbols at least one-eighth of an inch high, with the following information:

(a) The symbol DOT, constituting certification by the tubing assembler that the tubing assembly conforms to all applicable motor vehicle safety standards.

(b) A designation that identifies the manufacturer of the hose assembly, which shall be filed in writing with: Office of Vehicle Safety Compliance, Equipment Division NVS–222, National Highway Traffic Safety Administration, 400 Seventh St. S.W., Washington, DC 20590. The designation may consist of block capital letters, numerals, or a symbol.

S11.2.3.1 At least one end fitting of a plastic air brake tubing assembly made with end fittings that are attached by crimping or swaging shall be etched, stamped, or embossed with a designation at least one-sixteenth of an inch high that identifies the manufacturer of the tubing assembly and is filed in accordance with S11.2.3(b).

S11.3 *Test requirements*. Each plastic air brake tubing assembly or appropriate part thereof shall be capable of meeting any of the requirements set forth under this heading, when tested under the conditions of S13 and the applicable procedures of S12. However, a particular tubing assembly or appropriate part thereof need not meet further requirements after having met the constriction requirement (S11.3.1) and then having been subjected to any one of the requirements specified in S11.3.2 through S11.3.24.

S11.3.1 *Constriction*. Every inside diameter of any section of a plastic air brake tubing assembly shall not be less than 66 percent of the nominal inside diameter of the brake tubing. (S12.2)

S11.3.2 *High temperature conditioning and dimensional stability*. Plastic air brake tubing shall conform to the dimensions in Table VII after conditioning in air at 230 °F for four hours. (S12.3)

S11.3.3 *Boiling water conditioning and dimensional stability*. Plastic air brake tubing shall conform to the dimensions in Table VII after conditioning in boiling water for two hours. (S12.4)

S11.3.4 *Moisture absorption*. Plastic air brake tubing shall not absorb moisture in a quantity of more than 2 percent by weight after conditioning in air at 230 °F for 24 hours and then conditioning in a 100 percent relative humidity atmosphere at 75 °F for 100 hours. (S12.5)

S11.3.5 *Burst strength*. Plastic air brake tubing shall not rupture or burst when subjected to the burst strength pressure in Table VIII for the size of tubing being tested, when tested at an ambient temperature of 75 °F. (S12.6)

TABLE VIII.—PLASTIC AIR BRAKE TUBING MECHANICAL PROPERTIES

Type	Nominal tubing OD	Burst strength pressure		Stiffness force		Bend radius		Tensile load	
		kPa	psi	N	lbf	mm	inches	N	lbf
A	1/8 inch	6900	1000	4.4	1.0	9.4	0.37	67	15
A	5/32 inch	8300	1200	4.4	1.0	12.7	0.50	178	40
A	3/16 inch	8300	1200	4.4	1.0	19.1	0.75	178	40
A	1/4 inch	8300	1200	8.9	2.0	25.4	1.00	222	50
A	5/16 inch	6900	1000	27.0	6.0	31.8	1.25	334	75
B	3/8 inch	9700	1400	36.0	8.0	38.1	1.50	6671	50
B	1/2 inch	6600	950	89.0	20.0	50.8	2.00	890	200
B	5/8 inch	6200	900	222.0	50.0	63.5	2.50	1446	325
B	3/4 inch	5500	800	356.0	80.0	76.2	3.00	1557	350
A	6 mm	7600	1100	9.0	2.0	20.0	0.75	222	50
A	8 mm	6200	900	27.0	6.0	32.0	1.25	334	75
B	10 mm	8200	1200	36.0	8.0	38.0	1.50	667	150
B	12 mm	6900	1000	90.0	20.0	45.0	1.75	890	200
B	16 mm	6000	875	225.0	50.0	70.0	2.75	1446	325

S11.3.6 *Ultraviolet light resistance*. Plastic air brake tubing shall not rupture or burst when subjected to 80 percent of the burst strength pressure in Table VIII for the size of tubing being tested, after being exposed to ultraviolet light for 300 hours and then impacted with a one pound weight dropped from a height of 12 inches. (S12.7)

S11.3.7 *Low temperature flexibility*. The outer surface of plastic air brake tubing shall not show cracks visible without magnification as a result of conditioning in air at 230 °F for 24 hours, and then conditioning in air at minus 40 °F for four hours, and then bending the tubing 180 degrees around a test cylinder having a radius equal to

six times the nominal outside diameter of the tubing. (S12.8)

S11.3.8 *High temperature flexibility*. Plastic air brake tubing shall not rupture or burst when subjected to 80 percent of the burst strength pressure in Table VIII for the size of tubing being tested, after the tubing has been:

(a) conditioned in air at 230 °F for 72 hours while bent 180 degrees around a cylinder having a radius of two times the nominal outside diameter of the tubing; and

(b) cooled to room temperature while remaining on the cylinder, then straightened; and

(c) bent 180 degrees around the cylinder in the opposite direction of the first bending. (S12.9)

S11.3.9 *High temperature resistance*. Plastic air brake tubing shall not rupture or burst when subjected to 80 percent of the burst strength pressure in Table VIII for the size of tubing being tested, after the tubing has been conditioned in air at 230 °F for 72 hours. (S12.10)

S11.3.10 *High temperature conditioning, low temperature impact resistance*. Plastic air brake tubing shall not rupture or burst when subjected to 80 percent of the burst strength pressure in Table VIII for the size of tubing being tested, after the tubing has been conditioned in air at 230 °F for 24 hours, then conditioned in air at minus 40 °F for 4 hours and impacted with a one pound weight dropped from a height of 12 inches. (S12.11)

S11.3.11 *Boiling water conditioning, low temperature impact resistance*. Plastic air brake tubing shall not rupture or burst when subjected to 80 percent of the burst strength pressure in Table VIII for the size of tubing being tested, after the tubing has been conditioned in boiling water for two hours, then conditioned in air at minus 40 °F for 4 hours, and then impacted with a one pound weight dropped from a height of 12 inches. (S12.12)

S11.3.12 *Zinc chloride resistance*. The outer surface of plastic air brake tubing shall not show cracks visible under 7-power magnification after immersion in a 50 percent zinc chloride aqueous solution for 200 hours while bent around a cylinder having a radius of two times the nominal outside diameter of the tubing. (S12.13)

S11.3.13 *Methyl alcohol resistance*. The outer surface of plastic air brake tubing shall not show cracks visible under 7-power magnification after immersion in a 95 percent methyl alcohol aqueous solution for 200 hours while bent around a cylinder having a radius of two times the nominal outside diameter of the tubing (S12.14)

S11.3.14 *High temperature conditioning and stiffness*. Plastic air brake tubing shall require not more than the stiffness force specified in Table VIII to deflect 2 inches, when tested using the apparatus in Figure 9, after conditioning in air at 230 °F for 24 hours with the tubing supported in a straight position. (S12.15)

S11.3.15 *High temperature conditioning and adhesion*. Type B plastic air brake tubing shall have a tensile strength of 25 pounds per linear inch, measured at the interface of the inner and outer layers, after conditioning as specified in S11.3.8(a) through (c). (S12.16)

S11.3.16 *High temperature conditioning and collapse resistance*. The collapse of the outside diameter of plastic air brake tubing shall not exceed twenty percent of the original outside diameter when bent 180 degrees on a holding fixture to the bend radius specified in Table VIII and conditioned in air at 200 °F for 24 hours. (S12.17)

S11.3.17 *Ozone resistance*. The outer surface of plastic air brake tubing shall not show cracks visible under 7-power magnification after exposure to ozone for 70 hours at 104 °F. (S12.18)

S11.3.18 *Oil resistance*. Plastic air brake tubing shall not rupture or burst when subjected to 80 percent of the burst strength pressure in Table VIII for the size of tubing being tested, after the tubing has been conditioned in ASTM IRM 903 oil at 212 °F for 70 hours. (S12.19)

S11.3.19 *Tensile strength*. A plastic air brake tubing assembly designed for use between frame and axle or between a towed and a towing vehicle shall withstand, without separation of the tubing from its end fittings, a pull of 250 pounds if it is ⅜ inch or less or 10 mm or less in nominal outside diameter, or a pull of 325 pounds if it is larger than ⅜ inch or 10 mm in nominal outside diameter. A plastic air brake tubing assembly designed for use in any other application shall withstand, without separation of the hose from its end fittings, a pull of 35 pounds if it is ⅛ inch or 3 mm or less in nominal outside diameter, 40 pounds if it is 5⁄32 inch or 4 mm in nominal outside diameter, 50 pounds if it is 3⁄16 to ⅜ inch or 5 mm to 10 mm in nominal outside diameter, 150 pounds if it is ½ to ⅝ inch or 11 mm to 16 mm in nominal outside diameter, or 325 pounds if it is larger than ⅝ inch or 16 mm in nominal outside diameter. (S12.20)

S11.3.20 *Boiling water conditioning and tensile strength*. A plastic air brake tubing assembly when subjected to a tensile pull test shall either elongate 50 percent or withstand the tensile load in Table VIII without separation from its end fittings, with one end of the assembly conditioned in boiling water for 5 minutes. (S12.21)

S11.3.21 *Thermal conditioning and tensile strength*. A plastic air brake tubing assembly when subjected to a tensile pull test shall either elongate 50 percent or withstand the tensile strength in Table VIII without separation from its end fittings after the assembly has been subjected to four cycles of conditioning in air at minus 40 °F for thirty minutes, normalizing at room temperature, conditioning in boiling water for 15 minutes, and normalizing at room temperature. (S12.22)

S11.3.22 *Vibration resistance*. A plastic air brake tubing assembly with an internal air pressure of 120 psi shall not leak more than 50 cm^3 per minute at a temperature of minus 40 °F and 25 cm^3 per minute at a temperature of 75 °F, after the assembly has been subjected to 1,000,000 cycles of vibration testing with one end of the assembly fixed and the other end stroked ½-inch at 600 cycles per minute. In addition, end fittings that use a threaded retention nut shall retain at least 20 percent of the original retention nut tightening torque upon completion of the vibration testing. The vibration test shall be conducted in an environmental chamber and the air temperature shall be cycled between minus 40 °F and 220 °F during the test. (S12.23)

S11.3.23 *End fitting retention*. The end fittings of a plastic air brake tubing assembly shall not separate from the tubing or leak when the assembly is filled with hydraulic fluid and pressurized to the burst strength pressure in Table VIII. (S12.24)

S11.3.24 *Thermal conditioning and end fitting retention*. The end fittings of a plastic air brake tubing assembly shall not separate from the tubing or leak when filled with hydraulic fluid and:

(a) conditioned in air at 200 °F for 24 hours with atmospheric pressure inside the tubing assembly, and;

(b) maintaining an air temperature of 200 °F and increasing the pressure inside the tubing assembly to 450 psi, and holding this pressure for five minutes, and;

(c) reducing the internal tubing assembly pressure to atmospheric and permitting the tubing assembly to cool at 75 NF for 1 hour, and;

(d) conditioning the tubing assembly in air at minus 40 °F for 24 hours with atmospheric pressure inside the tubing assembly, and;

(e) maintaining an air temperature of minus 40 °F and increasing the pressure inside the tubing assembly to 450 psi,

and holding this pressure for five minutes. (S12.25)

S11.3.24 *End fitting corrosion resistance.* After 24 hours of exposure to salt spray, air brake hose end fittings shall show no base metal corrosion on the end fitting surface except where crimping or the application of labeling information causes a displacement of the protective coating. (S12.26)

S12. *Test procedures—Plastic air brake tubing, plastic air brake tubing assemblies, plastic air brake tubing end fittings.*

S12.1 *Air brake tubing dimensions.* Measure the tubing dimensions including wall thickness, inside diameter, and outside diameter, using appropriate metrology apparatus such as micrometers, dial indicators and gauge blocks, or optical comparators. To account for slight out-of-round conditions, diameter measurements may be calculated using the average of the major and minor diameters.

S12.2 *Constriction test.*

(a) Utilize a plug gauge as shown in Figure 4. Diameter ''A'' shall be equal to 66 percent of the nominal inside diameter of the plastic air brake tubing being tested.

(b) Tubing assemblies that are to be used for additional testing shall have constriction testing only at each end fitting. Other tubing assemblies may be cut into three inch lengths to permit constriction testing of the entire assembly.

(c) Hold the tubing in a straight position and vertical orientation.

(d) Place the spherical end of the plug gauge just inside the tubing. If the spherical end will not enter the tubing or end fitting using no more force than gravity acting on the plug gauge, this constitutes failure of the constriction test.

(e) Release the plug gauge. Within three seconds, the plug gauge shall fall under the force of gravity alone up to the handle of the gauge. If the plug gauge does not fully enter the tubing up to the handle of the gauge within three seconds, this constitutes failure of the constriction test.

S12.3 *High temperature conditioning and dimensional stability test.*

(a) Condition the tubing at 230 °F for 4 hours in an air oven.

(b) Remove the tubing from the oven and allow to cool at room temperature for 30 minutes.

(c) Measure the dimensions of the tubing using the procedure in S12.1.

S12.4 *Boiling water conditioning and dimensional stability test.*

(a) Utilize a pot constructed of a non-reactive material and fill with distilled water.

(b) Cut the tubing to a length that will fit into the pot without touching any surface of the pot. Slip the tubing over a stainless steel wire for positioning it in the pot.

(c) Bring the water to a boil. Place the tubing in the water and position it so that it does not touch the pot. Boil the tubing for two hours. Replenish the water as necessary, adding it slowly so that the water in the pot boils continuously.

(d) Remove the tubing from the water and allow to cool at room temperature for 30 minutes. Wipe off any water that remains on the tubing.

(e) Measure the dimensions of the tubing using the procedure in S12.1.

S12.5 *Moisture absorption test.*

(a) Prepare a sample of tubing twelve inches in length.

(b) Condition the tubing at 230 °F for 24 hours in an air oven. Remove the tubing from the oven and within 30 seconds, weigh it to establish the initial weight. The weight shall be measured with a resolution of 0.01g; if the scale has a higher resolution, then values of 0.005g and above shall be rounded to the nearest 0.01g and values below 0.005g shall be truncated.

(c) Place the tubing in an environmental chamber and condition it for 100 hours at 100 percent relative humidity and a temperature of 75 °F.

(d) Remove the tubing from the chamber within a period of 5 minutes, remove all surface moisture from the tubing using cloth and weigh the tubing to establish the conditioned weight. Weight shall be measured to the nearest 0.01g as in (b) above.

(e) Calculate percentage of moisture absorption as follows:

$$[\text{Conditioned Weight} - \text{Initial Weight}] \div [\text{Initial Weight}] \times 100$$

S12.6 *Burst strength test.*

(a) Utilize an air brake tubing assembly or prepare a 12 inch length of tubing and install end fittings according to the end fitting manufacturer's instructions.

(b) Connect one end of the tubing assembly to a source of air pressure and plug the other end.

(c) Increase the pressure inside the tubing assembly at a constant rate to the burst strength pressure for the size of tubing being tested as specified in Table VIII within a period of 5 seconds.

S12.7 *Ultraviolet light resistance test.*

(a) *Apparatus.* An accelerated weathering test machine for ultraviolet light conditioning of plastic air brake tubing. The machine shall be equipped with fluorescent UVA–340 light bulbs and automatic irradiance control. Also utilize an impact test apparatus as shown in Figure 8.

(b) *Test Standards.* The testing is in accordance with American Society for Testing and Materials (ASTM) G154–00 Standard Practice for Operating Light Apparatus for UV Exposure of Nonmetallic Materials; ASTM G151–97 Standard Practice for Exposing Nonmetallic Materials in Accelerated Test Devices that Use Laboratory Light Sources, and; ASTM D4329–99 Standard Practice for Fluorescent UV Exposure of Plastics.

(c) *Preparation.*

(i) Utilize a 12 inch length of plastic air brake tubing. Mask 1 inch of each end of the tubing where end fittings will be attached using opaque tape.

(ii) Attach the tubing to the test rack of the machine, securing it at the ends along the masked sections. Wipe the outside surface of the tubing with acetone to remove any surface contaminants. Place the tubing and rack in the accelerated weathering test machine so that the center of the tubing assembly is approximately in the center of the UV light exposure area of the test machine and the longitudinal axis of the tubing is parallel to the fluorescent bulb. (If multiple plastic brake tubing assemblies are tested, then their position in the machine should be rotated according to ASTM D4329–99 S7.4.1, except the rotation is each 96 hours instead of weekly.) The distance from the light bulb to the tubing is approximately 2 inches. Set the UV irradiance to 0.85 W/m^2 @ 340 nm and maintain this level during the testing. Maintain a temperature inside the test chamber of 113 °F, and use only atmospheric humidity. Expose the tubing at this UV irradiance level for 300 hours continuously. Remove the tubing from the test chamber.

(iii) Place the tubing inside the impact test apparatus, and drop the impacter onto the tubing from a height of 12 inches.

(iv) Remove the masking material from the ends of the tubing. Install end fittings according to the end fitting manufacturer's instructions. Conduct the burst strength test in S12.6 using 80 percent of the burst strength pressure for the size of tubing being tested as specified in Table VIII.

Figure 8. Impact Test Apparatus

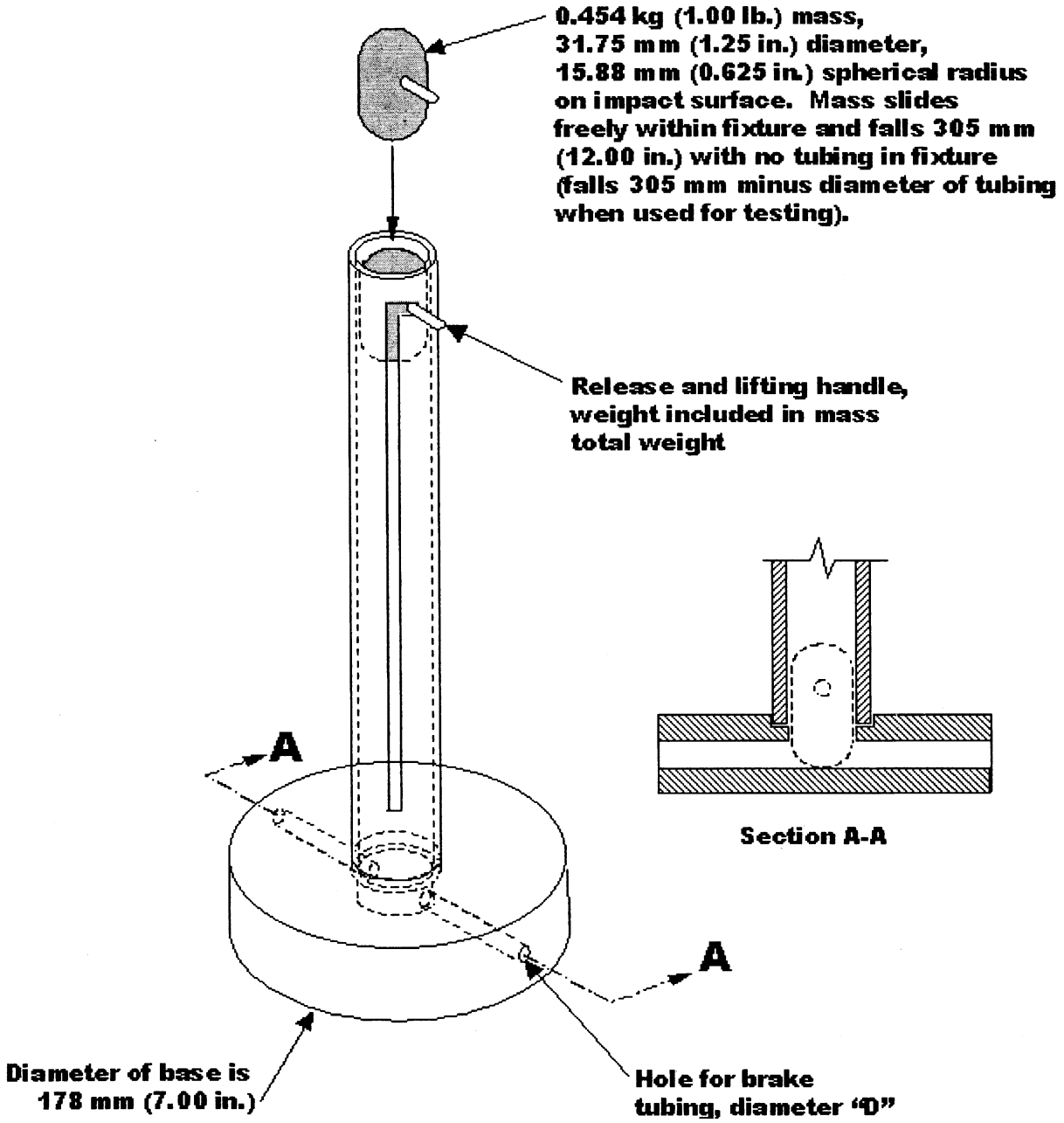

TABLE ACCOMPANYING FIGURE 8

Nominal tube O.D.	Hole DIA D (mm)	Hole DIA D (in)
1/8 in	3.96	0.156
5/32 in	4.75	0.187
3/16 in	5.54	0.218
1/4 in	7.14	0.281
5/16 in	8.71	0.343
3/8 in	10.31	0.406
1/2 in	13.49	0.531
5/8 in	16.66	0.656
3/4 in	20.32	0.800
6 mm	6.80	0.268
8 mm	8.80	0.346
10 mm	10.80	0.425
12 mm	12.80	0.504
16 mm	16.80	0.661

S12.8 *Low temperature flexibility test.*

(a) Utilize a cylinder having a radius of six times the nominal outside diameter of the tubing.

(b) Condition the tubing in an air oven at 230 °F for 24 hours. Remove from the oven and cool at room temperature for 30 minutes.

(c) Condition the cylinder and the tubing in an environmental chamber at minus 40 °F for four hours.

(d) With the tubing and test cylinder at minus 40 °F, bend the tubing 180 degrees around the cylinder at a steady rate in a period of 4 to 8 seconds.

S12.9 *High temperature flexibility test.*

(a) Utilize a cylinder having a radius of two times the nominal outside diameter of the tubing.

(b) Bend the tubing 180 degrees around the cylinder and hold in place with a clamp or other suitable support, applying only enough force on the tubing to hold it in position.

(c) Condition the tubing and cylinder in an air oven at 230 °F for 72 hours. Remove the tubing and cylinder from the oven and cool at room temperature for two hours.

(d) Remove the clamps or supports from the tubing and straighten the tubing at a steady rate in a period of 4 to 8 seconds.

(e) Rebend the tubing 180 degrees around the mandrel, at the same point

but in the opposite direction of the bending in (b) above, at a steady rate in a period of 4 to 8 seconds.

(f) Conduct the burst strength test in S12.6 using 80 percent of the burst strength pressure for the size of tubing being tested as specified in Table VIII.

S12.10 *High temperature resistance test.* Condition the tubing in an air oven at 230 °F for 72 hours. Remove the tubing and allow to cool at room temperature for 30 minutes. Conduct the burst strength test in S12.6 using 80 percent of the burst strength pressure for the size of tubing being tested as specified in Table VIII.

S12.11 *High temperature conditioning, low temperature impact resistance test.*

(a) *Apparatus.* Utilize an impact test apparatus as shown in Figure 8.

(b) Condition the tubing in an air oven at 230 °F for 72 hours. Remove the tubing and allow to cool at room temperature for 30 minutes.

(c) Condition the tubing and the impact test apparatus in an environmental chamber at minus 40 °F for 4 hours.

(d) With the tubing and impact test apparatus at minus 40 °F, place the tubing inside the apparatus and drop the impacter onto the tubing from a height of 12 inches. Remove the tubing from the chamber and allow to warm at room temperature for one hour.

(e) Conduct the burst strength test in S12.6 using 80 percent of the burst strength pressure for the size of tubing being tested as specified in Table VIII.

S12.12 *Boiling water conditioning, low temperature impact resistance test.*

(a) *Apparatus.* Utilize an impact test apparatus as shown in Figure 8.

(b) Condition the tubing in boiling water using the test in S12.4(a) through (d).

(c) Condition the tubing and the impact test apparatus in an environmental chamber at minus 40 °F for 4 hours.

(d) With the tubing and impact test apparatus at minus 40 °F, place the tubing inside the apparatus and drop the impacter onto the tubing from a height of 12 inches. Remove the tubing from the chamber and allow to warm at room temperature for one hour.

(e) Conduct the burst strength test in S12.6 using 80 percent of the burst strength pressure for the size of tubing being tested as specified in Table VIII.

S12.13 *Zinc chloride resistance test.*

(a) Utilize a cylinder having a radius of two times the nominal outside diameter of the tubing. The cylinder is constructed of a non-reactive material or coated to prevent chemical reaction with zinc chloride.

(b) Bend the tubing 180 degrees around the cylinder and hold in place with a clamp or other suitable support constructed of non-reactive materials, applying only enough force on the tubing to hold it in position.

(c) Immerse the tubing and cylinder in a 50 percent zinc chloride aqueous solution at room temperature for 200 hours.

(d) Remove the tubing and cylinder from the solution. While still on the test cylinder, inspect the tubing under 7-power magnification for cracks.

S12.14 *Methyl alcohol resistance.*

(a) Utilize a cylinder having a radius of two times the nominal outside diameter of the tubing. The cylinder is constructed of a non-reactive material or coated to prevent chemical reaction with methyl alcohol.

(b) Bend the tubing 180 degrees around the cylinder and hold in place with a clamp or other suitable support constructed of non-reactive materials, applying only enough force on the tubing to hold it in position.

(c) Immerse the tubing and cylinder in a 95 percent methyl alcohol aqueous solution at room temperature for 200 hours.

(d) Remove the tubing and cylinder from the solution. While still on the test cylinder, inspect the tubing under 7-power magnification for cracks.

S12.15 *High temperature conditioning and stiffness.*

(a) *Apparatus.* Use a flexibility test device shown in Figure 9 with a spring scale or force transducer to measure the force applied to the tubing during bending.

(b) Prepare an 11-inch long length of tubing. Insert a metal rod 12 inches long of suitable diameter to provide a slip fit inside the tubing, and insert it in the tubing to hold it in a straight position within ⅛ inch of true straightness.

(c) Condition the tubing in an air oven at 230 °F for 24 hours. Remove the tubing and allow to cool at room temperature for two hours.

(d) Remove the metal rod from the tubing and place the tubing in the flexibility test device, with the tubing centered on the device and clearance removed between tubing and the pins and cylinder of the test device.. Mark the location of each end of the tubing. Pull on the device until both ends of the tubing have deflected 2 inches from the original position. Record the force applied to the device and verify that it does not exceed the stiffness force in Table VII for the size of tubing being tested.

Figure 9. Stiffness Test Apparatus

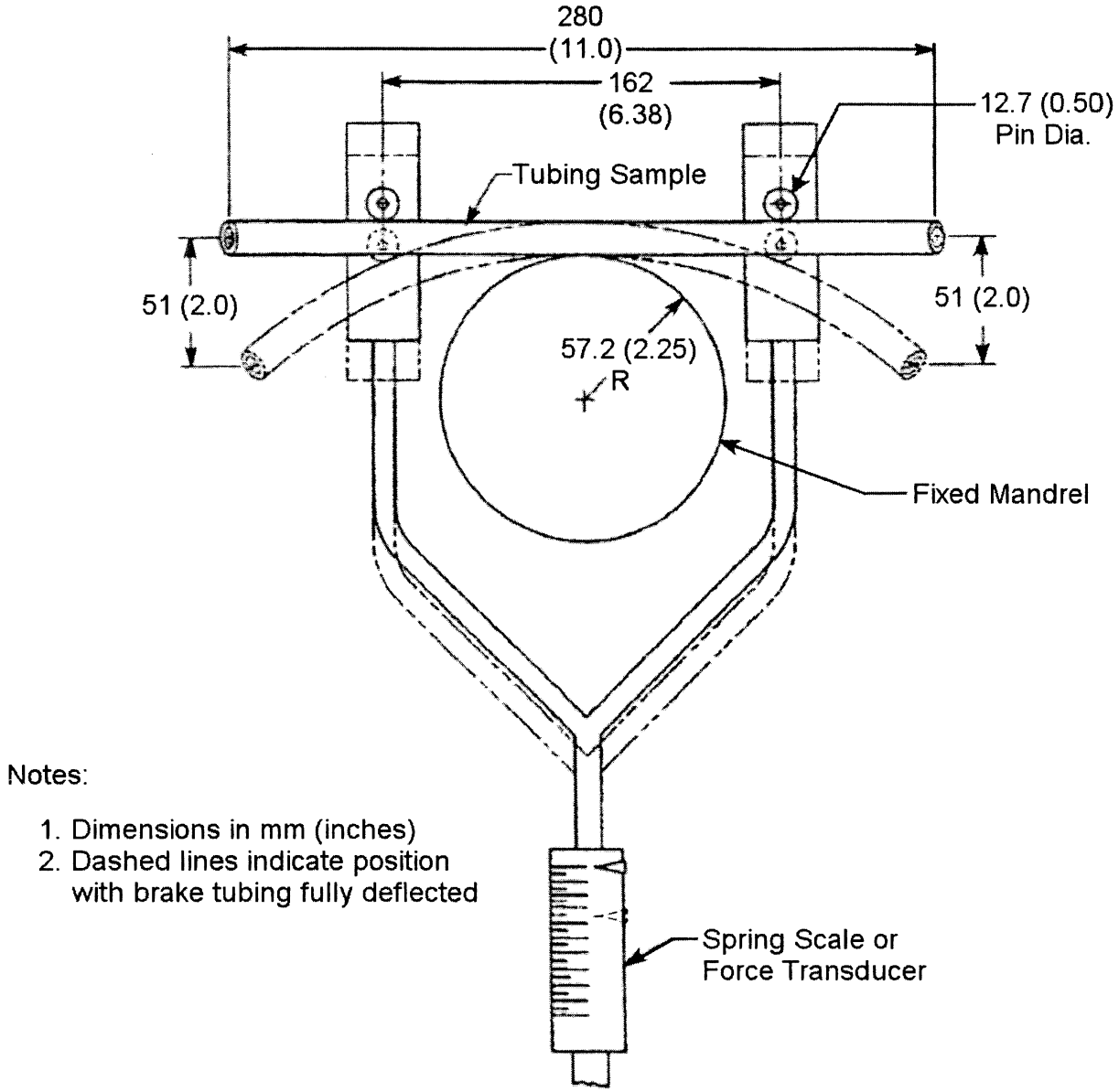

S12.16 *High temperature conditioning and adhesion test.*

S12.16.1 *Apparatus.* A tension testing machine that conforms to the requirements of American Society for Testing and Materials (ASTM) Standard Practices for Force Verification of Testing Machines, Designation E4–99. The machine shall have one movable and one fixed jaw suitable for clamping small sections of plastic air brake tubing material. The machine produces a chart or has a recording device providing displacement as one coordinate and tensile force as the other.

S12.16.2 *Preparation.*

(a) Subject the tubing to the bending and temperature conditioning tests specified in S12.9 (a) through (e).

(b) Cut a test specimen of 1 inch in length from a section of tubing that was subjected to bending in (a).

(c) Cut the specimen longitudinally along its entire length so that one wall of the tubing is completely cut through. Along one edge of the specimen resulting from this cut, use a sharp knife and cut the tubing at the interface of the inner and outer layers until two flaps of material are created that are large enough to be clamped in the tension testing machine. One flap consists of material from the inner layer and one flap consists of material from the outer layer.

(d) Mount the specimen in the tension testing machine by clamping one flap in each jaw. Apply a tensile force of 25 pounds to the flaps of the specimen in a period of 5 seconds and maintain this force for the duration of the test. The specimen is permitted to separate a small amount until the inner and outer layer interface becomes fully engaged and a continuous line of reinforcing braid is not present at the layer interface. The layers of the specimen shall not separate thereafter.

S12.17 *High temperature conditioning and collapse resistance test.*

(a) *Apparatus.* A holding device with two vertical pins, the distance between which can be adjusted by moving one or both pins. The bottoms of the pins are attached to the device and remain in a horizontal plane. The diameter of the pins is approximately the same as the inside diameter of the size of tubing to be tested, and is 1 inch in length.

(b) *Preparation.* (i) Use the bend radius for the size of tubing being tested from Table VIII and cut the tubing to the following length:

3.14 × [bend radius]] + [10 × [nominal tubing OD]] + 2 inches

or

[3.14 × [bend radius]] + [10 × [nominal tubing OD]] + 50 mm

(ii) Place a reference mark at the center of the sample. At this mark, measure the initial outside diameter of the tubing. If the tubing is slightly out-of-round, use the minor diameter as the initial outside diameter.

(iii) Install the tubing completely over the pins of the holding device so that the tubing is bent 180 degrees. Adjust the distance between the pins until the bent radius of the tubing is approximately equal to the bend radius for the size of tubing being tested from Table VIII.

(iv) Condition the holding device and tubing in an air oven at 230 °F for 24 hours. Remove the holding device and tubing and allow to cool at room temperature for thirty minutes.

(v) With the tubing still mounted to the holding device, measure the minor diameter of the tubing at the reference mark to determine the final outside diameter.

(c) *Calculation.* Calculate the percentage collapse of the outside diameter of the tubing as follows:

[Initial Outside Diameter − Final Outside Diameter] ÷ [Initial Outside Diameter] × 100

S12.18 *Ozone resistance test.* Conduct the test specified in S6.8 using plastic air brake tubing.

S12.19 *Oil resistance test.*

(a) Utilize a plastic air brake tubing assembly or prepare a 12 inch length of tubing and install end fittings according to the end fitting manufacturer's instructions.

(b) Immerse the tubing assembly in ASTM 903 oil at 212 °F for 70 hours. Remove and allow to cool at room temperature for 30 minutes. Wipe any excess oil from the tubing assembly.

(c) Connect one end of the tubing assembly to a source of air pressure and plug the other end.

(d) Increase the pressure inside the tubing assembly at a constant rate to 80 percent of the burst strength pressure for the size of tubing being tested as specified in Table VIII within a period of 5 seconds.

S12.20 *Tensile strength test.* Conduct the test specified in S6.9 using a plastic air brake tubing assembly or an assembly prepared from a 12 inch length of tubing with the end fittings according to the end fitting manufacturer's instructions.

S12.21 *Boiling water conditioning and tensile strength.*

(a) *Apparatus.* Use the tension testing machine specified in S8.9. Equip the lower attachment point of the machine with a heated, open-top container. The container acts as the lower attachment point for a brake tubing assembly, or it may have a hole in the bottom for the lower attachment point of the machine to pass through the container provided that the hole is sealed water-tight to the machine.

(b) *Preparation.* Prepare an air brake tubing assembly with a free length of six inches in accordance with the end fitting manufacturer's instructions. The free length is measured from the innermost crimp, ferrule, taper, or other mechanical joint that secures the fitting to the tubing and spring guards and other appurtenances are disregarded for measurement purposes. Install the tubing assembly on the tension testing machine with the lower fitting plugged to prevent water from entering the tubing. Fill the container with distilled water so that 4 inches of exposed tubing is submerged. Heat the water until it boils. After the water has boiled continuously for 5 minutes, apply tension to the tubing assembly at a rate of 1 inch per minute travel of the moving head until either the tensile load in Table VIII for the size of tubing being tested is reached or the free length of the tubing assembly reaches 9 inches, whichever occurs first.

S12.22 *Thermal conditioning and tensile strength.*

(a) *Apparatus.* Use the tension testing machine specified in S8.9.

(b) *Preparation.* Prepare an air brake tubing assembly with a free length of six inches in accordance with the end fitting manufacturer's instructions. The free length is measured from the innermost crimp, ferrule, taper, or other mechanical joint that secures the fitting to the tubing and spring guards and other appurtenances are disregarded for measurement purposes. Subject the tubing assembly to four complete cycles of the following sequence:

(i) Condition the tubing assembly in an environmental chamber at minus 40 °F for 30 minutes. Remove from the chamber and allow to warm at room temperature for 30 minutes.

(ii) Condition the tubing assembly by submerging it in boiling water for 15 minutes. Remove and allow to cool at room temperature for 30 minutes.

Install the tubing assembly on the tension testing machine and apply tension to the tubing assembly at a rate of 1 inch per minute travel of the moving head until either the tensile load in Table VIII for the size of tubing being tested is reached or the free length of the tubing assembly reaches 9 inches, whichever occurs first.

S12.23 *Vibration resistance test.*

(a) *Apparatus.* A vibration testing machine that supports a brake tubing assembly by its end fittings in approximately a straight line and includes the following features:

(i) One tubing assembly attachment point is fixed and the other moves in a plane perpendicular to a line projected between the attachment points. The movable attachment point moves in a linear direction and travels ½ inch total and at its midpoint of travel falls on a line projected between the attachment points. The movable attachment point has a cycle rate of 600 cycles per minute.

(i) The distance between the attachment points is adjustable to compensate for varying lengths of brake tubing assemblies.

(ii) The actuating mechanism for the movable attachment point is balanced to prevent introduction of machine vibration into the brake tubing assembly.

(iii) The machine has a compressed air supply system that pressurizes the air brake tubing assembly through one fitting while the other fitting is plugged. The machine's compressed air supply system includes a pressure gauge or monitoring system and an air flow meter.

(iv) The machine is constructed so that an air brake tubing assembly mounted on it can be conditioned in an environmental test chamber.

(b) *Preparation.* (i) Prepare an air brake tubing assembly with a free length of eighteen inches in accordance with the end fitting manufacturer's instructions. The free length is measured from the innermost crimp, ferrule, taper, or other mechanical joint that secures the fitting to the tubing and spring guards and other appurtenances are disregarded for measurement purposes.

(ii) Install the air brake tubing assembly on the vibration testing machine and, with the movable attachment point at the midpoint of its travel, adjust the distance between the attachment points so that they are ½ inch closer together than the distance at which the tubing assembly is taut.

(iii) With the tubing assembly inside the environmental chamber, supply compressed air to the tubing assembly at a pressure of 120 psig and maintain this supply pressure for the duration of the test. Set the temperature of the environmental chamber to 220 °F and initiate cycling of the movable attachment point. After 250,000 cycles,

set the temperature of the environmental chamber to minus 40 °F. After 500,000 cycles, set the temperature of the environmental chamber to 220 °F. After 750,000 cycles, set the temperature of the environmental chamber to minus 40 °F. Measure the air flow rate just prior to 1,000,000 cycles and if the compressed air flow rate supplied to the air brake tubing assembly exceeds 50 cm^3 per minute this constitutes failure of the test. Stop the cycling at 1,000,000 cycles and set the environmental chamber temperature to 75 °F, while air pressure is still supplied to the air brake tubing assembly. After 1 hour, measure the compressed air flow rate supplied to the air brake tubing assembly and if the rate exceeds 25 cm^3 per minute this constitutes failure of the test.

(iv) For end fittings that use a threaded retaining nut, apply 20 percent of the original tightening torque as measured in S11.3.22, in the direction of tightening. If the retention nut visibly moves, this constitutes a failure of the test.

S12.24 *End fitting retention test.*

(a) *Apparatus.* A source of hydraulic pressure that includes a pressure gauge or monitoring system, and uses a petroleum-based hydraulic fluid with a pour point of less than minus 40 °F.

(b) *Preparation.* Utilize an air brake tubing assembly or prepare an air brake tubing assembly with a free length of twelve inches in accordance with the end fitting manufacturer's instructions. Attach one end of the assembly to the hydraulic pressure supply and plug the other end of the assembly, and fill the assembly with hydraulic fluid and bleed any air from the assembly. Increase the hydraulic pressure inside the tubing assembly at a constant rate to 50 percent of the burst pressure for the size of tubing being tested as specified in Table VIII within a period of 5 seconds, and hold this pressure for 30 seconds. Then increase the hydraulic pressure inside the tubing assembly at a constant rate to the burst pressure for the size of tubing being tested as specified in Table VIII within a period of 5 seconds. Visually inspect the assembly for leakage or separation at the end fittings.

S12.25 *Thermal conditioning and end fitting retention test.*

(a) *Apparatus.* A source of hydraulic pressure that includes a pressure gauge or monitoring system, uses a petroleum-based hydraulic fluid with a pour point of less than minus 40 °F, and is constructed so that an air brake tubing assembly mounted to it can be conditioned in an environmental test chamber.

(b) *Preparation.* Utilize an air brake tubing assembly or prepare an air brake tubing assembly with a free length of twelve inches in accordance with the end fitting manufacturer's instructions. Attach one end of the assembly to the hydraulic pressure supply and plug the other end of the assembly, fill the assembly with hydraulic fluid and bleed any air from the assembly, and place the tubing assembly inside an environment chamber. Conduct the following tests:

(i) With atmospheric pressure applied to the hydraulic fluid inside the tubing assembly, set the environmental chamber temperature to 200 °F and condition the tubing assembly for 24 hours.

(ii) With the temperature maintained at 200 °F, increase the hydraulic pressure inside the tubing assembly at a constant rate to 450 psig within a period of 5 seconds, and hold this pressure for 5 minutes.

(iii) Decrease the pressure inside the tubing assembly to atmospheric and set the temperature of the environmental chamber to 75 °F. Condition the tubing assembly at this temperature for 1 hour.

(iv) Set the temperature of the environmental chamber to minus 40 °F and condition the tubing assembly for 24 hours.

(v) With the temperature maintained at minus 40 °F, increase the hydraulic pressure inside the tubing assembly at a constant rate to 450 psi within a period of 5 seconds, and hold this pressure for 5 minutes. Visually inspect the assembly for leakage or separation at the end fittings.

S12.26. *End fitting serviceability.*

(a) *Apparatus.* A source of air pressure that includes a pressure gauge or monitoring system and is equipped with a mass flow meter.

(b) *Preparation.* Prepare a 12 inch length of plastic air brake tubing and plug one end. Assemble the end fitting with the threaded retention nut on the other end of the tubing according to the end fitting manufacturer's instructions, and then disassemble the fitting. Repeat the assembly and disassembly sequence three more times, and then reassemble the end fitting (five total assembly steps).

(c) Attach the end fitting with the threaded retention nut to the source of air pressure. Pressurize the tubing assembly to a pressure of 120 psi in a period of two seconds. If the end fitting leaks, measure and record the leakage rate using the mass air flow meter.

S12.27 *End fitting corrosion resistance.* Conduct the test specified in S6.9 using a plastic air brake tubing assembly.

S13. *Test conditions.* Each hose assembly or appropriate part thereof shall be able to meet the requirements of S5, S7, S9, and S11, under the following conditions.

S13.1 The temperature of the testing room is 75 °F.

S13.2 Unless otherwise indicated, the test samples are stabilized at test room temperature prior to testing.

S13.3 The brake hoses and brake hose assemblies are at least 24 hours old, and unused.

S13.4. Specified test pressures are gauge pressures (psig).

Issued: May 1, 2003.

Stephen R. Kratzke,

Associate Administrator for Rulemaking.

[FR Doc. 03–11292 Filed 5–14–03; 8:45 am]

BILLING CODE 4910–59–P

Federal Register

Thursday,
May 15, 2003

Part III

Department of Education

Office of Innovation and Improvement—Advanced Placement Incentive (API) Program; Notice Inviting Applications for New Grant Awards for Fiscal Year (FY) 2003; Notice

DEPARTMENT OF EDUCATION

RIN 1855–ZA00

[CFDA No.: 84.330C]

Office of Innovation and Improvement—Advanced Placement Incentive (API) Program; Notice Inviting Applications for New Awards for Fiscal Year (FY) 2003

Purpose of Program: The API program, funded under section 1705 of Title I, Part G of the Elementary and Secondary Education Act of 1965 (ESEA), as amended by the No Child Left Behind Act of 2001 (NCLB), awards competitive grants designed to increase the successful participation of low-income students in pre-advanced placement and advanced placement courses and tests. By supporting increased access to and participation in pre-advanced placement and advanced placement courses and tests, the program provides greater opportunities for low-income students to achieve to high standards in English, mathematics, science, and other core subjects. Additional long-term goals of the program are to demonstrate that larger and more diverse groups of students can participate and succeed in advanced placement programs, and to increase the numbers of low-income and other disadvantaged students who receive baccalaureate and advanced degrees.

The API program provides resources that local educational agencies (LEAs) and other eligible applicants can use in pursuit of the objectives of the NCLB which aims for all elementary and secondary students to achieve to high standards. In particular, this program provides an opportunity for eligible entities to create new programs in schools identified for improvement, corrective action, or restructuring under Title I, Part A of the ESEA.

Eligible Applicants: (a) State educational agencies (SEAs); (b) LEAs, including charter schools that are considered LEAs under State law; and (c) national nonprofit educational entities with expertise in advanced placement services. In the case of an eligible entity that is an SEA, the SEA may use API grant funds to award subgrants to LEAs to enable those LEAs to carry out activities authorized under this program.

Applications Available: 5–16–03.

Notification of Intent to Apply for Funding: The Department will be able to develop a more efficient process for reviewing grant applications if it has a better understanding of the number of entities that intend to apply for funding under this competition. Therefore, the Secretary strongly encourages each potential applicant for the API program to notify the Department by e-mail that it intends to submit an application for funding. The notification of intent to apply for funding should be sent no later than June 16, 2003 to the following Internet address: *madeline.baggett@ed.gov*.

Applicants who fail to provide this e-mail notification may still apply for funding.

Deadline for Transmittal of Applications: 7–3–03.

Deadline for Intergovernmental Review: 9–1–03.

Estimated Available Funds: Approximately $10.7 million.

Estimated Range of Awards: $200,000 to $700,000 per year.

Estimated Average Size of Awards: $200,000—$450,000 per year.

Estimated Number of Awards: 22–42.

Note: These estimates are projections for the guidance of potential applicants. The Department is not bound by any estimates in this notice.

Project Period: Up to 36 months.

Page Limit: The application narrative (Part VII of the application package) is where you, the applicant, address the selection criteria that reviewers use to evaluate your application. You are encouraged to limit Part VII to the equivalent of no more than 50 pages, using the following standards:

- A ''page'' is 8.5″ x 11″ on one side only, with 1″ margins at the top, bottom, and both sides;
- Double space (no more than three lines per vertical inch) all text in the application narrative, including titles, headings, footnotes, quotations, references, and captions, as well as text in charts, tables, figures, and graphs; and
- Use a font that is either 12-point or larger or no smaller than 10 pitch (characters per inch).

Applicable Regulations and Statute: (a) *Regulations*. Education Department General Administrative Regulations (EDGAR) in 34 CFR Parts 74, 75, 77, 79, 80, 81, 82, 85, 86, 97, 98, and 99. (b) *Statute.* Title I, Part G of Elementary and Secondary Education Act of 1965 (ESEA), as amended the No Child Left Behind Act of 2001 (NCLB), 20 U.S.C. 6535–6537.

SUPPLEMENTARY INFORMATION: The API program promotes greater access to, and participation in, advanced placement courses and tests for low-income and other disadvantaged students. Covered programs include pre-advanced placement and advanced placement courses as well as the advanced placement tests administered by the College Board. The International Baccalaureate Organization courses and exams are also approved under the program. Other educational entities that provide comparable programs of rigorous academic courses and testing through which low-income students may earn college credit may request approval from the Secretary.

The Secretary encourages schools to offer more rigorous middle and high school curricula in English, mathematics, science, and other core subjects. The API program supports that effort and, thus, is an important component of the Department's commitment to ensuring that ''no child is left behind''. In addition to improving academic achievement for all students, the program strives to raise expectations for low-income children. The development, enhancement, and expansion of advanced placement courses in all core disciplines is a key strategy for increasing the participation of students, especially low-income and other disadvantaged students, in advanced placement and other challenging courses.

Since the original authorization of the Department's Advanced Placement program in 1998, funding for the program has increased from $3 million to the current appropriation of $23 million. In May 2002, low-income students took 140,571 advanced placement tests administered by the College Board, a 25 percent increase compared to 2001. While the Department is encouraged by this dramatic increase, it is important to note that, in 2002, the College Board changed the way it collects the data, and part of the increase may reflect this change. In addition, even with significant gains, there is still a significant gap between the level of participation of low-income students in advanced placement courses and tests and the level of participation of students from more affluent backgrounds.

The API program supports activities that enable greater numbers of low-income and other disadvantaged students to benefit from advanced placement courses and exams (ultimately increasing the likelihood that these students will receive college degrees) through increased access to, and participation in, pre-advanced placement and advanced placement courses. Pre-advanced placement and advanced placement teachers in the schools served by the program may participate in sustained, high-quality professional development activities designed to:

(1) Improve teacher content area knowledge;

(2) Increase utilization of research-based classroom practices that foster student achievement for low-income students; and

(3) Strengthen the alignment of pre-advanced placement and advanced placement curricula through ''vertical team training'' and other strategies.

In accordance with section 1705(f) of the authorizing statute, applicants approved for funding under this program will, for each advanced placement subject supported by the grant, be required to submit to the Secretary annual reports on, among other things, the number of students served by the grantee who are taking an advanced placement course in that subject; the number of advanced placement tests in that subject taken by students served by the grantee; and the number of students served by the grantee scoring at different levels on advanced placement tests in that subject. In addition, grantees must submit disaggregated data (by race, ethnicity, sex, English proficiency status, and socio-economic status) on individuals taking advanced placement courses and tests.

Absolute Priority: We have chosen the elements of the absolute priority from the authorized activities and priorities specified in sections 1705(c) and (d) of the ESEA. To implement the absolute priority, the Secretary will fund under this competition only applications from eligible applicants that meet both elements of the absolute priority.

Under section 75.105(c)(3) of EDGAR, the Secretary is establishing an absolute priority for applications that—

(1) Demonstrate an intent to carry out activities that target schools, or LEAs operating schools, with a high concentration of low-income students (if the applicant is an LEA, propose to serve schools with a high concentration of low-income students); and

(2) Propose to develop, enhance, or expand pre-advanced placement courses, in conjunction with advanced placement courses, in English, mathematics, science, and other core academic areas at the middle or high school level. Effective pre-advanced placement programs should enable low-income students to enroll and succeed in advanced placement courses and tests in core academic areas. Proposals may include vertical teams training, high-quality professional development for pre-advanced placement and advanced placement teachers, and coordination of curriculum design and development between middle and high school teachers.

Notes

(1) Pre-advanced placement courses are intended to provide middle and high school students with the higher order thinking skills, content knowledge, and study habits necessary for successful participation in advanced placement courses. Applicants should explain why the courses supported by the proposed project qualify as pre-advanced placement or advanced placement.

(2) Applicants may submit free or reduced-price lunch data in order to verify that participating schools meet this priority. For the definitions of *low-income individual* (including a list of other types of data that may be used to verify low-income status) and *high concentration of low-income students,* see the Definitions section of this notice.

Allowable Activities

Within this absolute priority, eligible entities implement programs designed to expand access for low-income individuals to pre-advanced placement and advanced placement programs through activities such as:

(1) Teacher training;

(2) Pre-advanced placement course development;

(3) Coordination and articulation between grade levels to prepare students to enter and succeed in advanced placement courses;

(4) Purchase of books and supplies;

(5) Activities to increase the availability of, and participation in, on-line advanced placement courses; and

(6) Any other activity directly related to expanding access to and participation in pre-advanced placement and advanced placement programs, particularly for low-income individuals.

Note: Applicants approved for funding under this competition may be required to attend a two-day Project Directors' meeting in Washington, DC during the first year of the grant. The cost of attending this meeting may be paid from API program grant funds or State or local resources.

Selection Criteria: The Secretary will use the following selection criteria to evaluate applications under this competition. These selection criteria apply to the absolute priority and allowable activities only. The maximum score for all of the selection criteria is 100 points. The maximum score for each criterion is indicated in parenthesis with the criterion. The criteria are as follows:

(a) *Significance* (20 points). The Secretary considers the significance of the proposed project. In determining the significance of the proposed project, the Secretary considers the following factors:

(1) The likelihood that the proposed project will result in system changes or improvements that provide greater access to pre-advanced placement and advanced placement courses and highly-trained teachers for low-income and other disadvantaged students.

(2) The importance or magnitude of the results or outcomes likely to be attained by the proposed project, especially improvements in teaching and student achievement.

(b) *Quality of the Project Design* (20 points). The Secretary considers the quality of the project design of the proposed project. In determining the quality of the project design, the Secretary considers the following factors:

(1) The extent to which the proposed project represents an exceptional approach for meeting the objectives of the program and the priorities established for the competition.

(2) The extent to which the design of the proposed project is appropriate to, and will successfully address, the needs of the target population.

(c) *Quality of Project Services* (20 points). The Secretary considers the quality of project services to be provided by the proposed project. In determining the quality of the services to be provided, the Secretary considers the quality and sufficiency of strategies for ensuring equal access and treatment for eligible project participants based on race, color, national origin, gender, age, or disability. In addition, the Secretary considers the following factors:

(1) The extent to which the services to be provided by the proposed project reflect up-to-date knowledge from research and of effective practices.

(2) The extent to which the training or professional development services to be provided by the proposed project are of sufficient quality, intensity, and duration to lead to improvements in practice among the recipients of those services.

(d) *Quality of Project Personnel* (10 points). The Secretary considers the quality of the personnel who will carry out the proposed project. In determining the quality of project personnel, the Secretary considers the following factors:

(1) The qualifications, including relevant training and experience, of the project director and other key personnel;

(2) The qualifications, including relevant training and experience, of project consultants or subcontractors, if any.

(e) *Adequacy of Resources* (5 points). The Secretary considers the adequacy of resources. In determining the adequacy

of resources for the proposed project, the Secretary considers the following factors:

(1) The adequacy of support, including facilities, equipment, supplies, and other resources, from the applicant organization.

(2) The extent to which the costs are reasonable in relation to the number of persons to be served and to the anticipated results and benefits.

(f) *Quality of the Management Plan* (10 points). The Secretary considers the quality of the management plan. In determining the quality of the management plan for the proposed project, the Secretary considers the following factors:

(1) The likelihood of the management plan to achieve the objectives of the proposed project on time and within budget, including clearly defined responsibilities, time lines, and milestones for accomplishing project tasks.

(2) The extent to which the time commitments of the project director and other key project personnel are appropriate and adequate to meet the objectives of the proposed project.

(g) *Quality of the Project Evaluation* (15 points). The Secretary considers the quality of the project evaluation. In determining the quality of the project evaluation, the Secretary considers the following factors:

(1) The extent to which the methods of evaluation include the use of objective performance measures that are clearly related to the intended outcomes of the project and will produce quantitative and qualitative data to the extent possible; and

(2) The extent to which the evaluation meets the reporting requirements of section 1705(f) of the authorizing statute.

Competitive Priorities: These priority points are in addition to any points the applicant earns under the selection criteria. The selection criteria will not be used to evaluate these priorities. The Secretary may select an application that meets a priority over an application of comparable merit that does not meet the priority. The maximum number of points an application may earn based on the priority points and the selection criteria is 145 points.

Statutory Priorities

In accordance with the requirements of section 1705(c) of the authorizing statute and section 75.105(c)(2)(i) of EDGAR, the Secretary will award applications a total of up to twenty-five (25) additional points for addressing the following statutory priorities:

(1) Up to twenty (20) points for demonstrating a pervasive need for the development of pre-advanced placement or advanced placement courses for middle or high schools where there are few or no advanced placement courses currently available; and

(2) Up to five (5) points for demonstrating one or more of the following:

- Involvement of business and community organizations in the activities assisted;
- Availability of matching funds from State, local, or other sources to pay for a portion of the cost of activities to be assisted; or
- Intent to carry out activities to increase the availability of, and participation in, on-line advanced placement courses.

Evaluation Priority

Under 34 CFR 75.105(c)(2)(i), the Secretary will award a total of up to twenty (20) additional priority points to applicants that propose to conduct evaluation activities designed to assess the effectiveness of this program in one or more areas. The project is designed to determine whether the program implemented produces meaningful effects on student achievement or teacher performance through a rigorous evaluation. The evaluation preferably uses an experimental design. For the API program, an evaluation using an experimental design is one where subjects at the school or district level are randomly assigned to receive the program being evaluated or to be in a control group that does not receive the program. Evaluations using an experimental design will receive up to twenty (20) points.

If random assignment is not feasible, the project may employ a quasi-experimental design with carefully matched comparison conditions. This alternative design attempts to approximate a randomly assigned control group by matching subjects (students, teachers, classrooms or schools) with non-participants possessing similar pre-program characteristics. Evaluations using a quasi-experimental design will receive up to fifteen (15) points.

Proposed evaluations that use neither experimental designs with random assignment nor quasi-experimental designs using matched comparison groups will receive no points under this competitive priority.

Data from reliable and valid measures of the intervention that the program intends to implement and of the outcomes that the program intends to effect should be collected before and after participation in the program or the comparison condition.

Points awarded under this priority will be determined by the quality of the proposed evaluation. In determining the quality of the evaluation, we will consider the extent to which the applicant presents a feasible, credible plan that includes:

(1) The type of design to be used (random assignment or matched comparison);

(2) Outcomes to be measured;

(3) A discussion of how schools or districts will be assigned to the program or matched for comparison with other schools or districts; and

(4) A proposed evaluator, preferably independent, with the necessary background and technical expertise to carry out the proposed evaluation.

Definitions

The following definitions and other provisions are taken from the API program authorizing statute, in Title I, Part G of the ESEA. They are repeated in this application notice for the convenience of the applicant.

As used in this section:

(a) The term *advanced placement test* means an advanced placement test administered by the College Board or approved by the Secretary.

Note: In addition to advanced placement tests administered by the College Board, the Department has approved advanced placement tests administered by the International Baccalaureate Organization. As part of the grant application process, applicants may request approval of tests from other educational entities that provide comparable programs of rigorous academic courses and testing through which students may earn college credit.

(b) The term *high concentration of low-income students,* used with respect to a school, means a school that serves a student population at least 40 percent or more of whom are low-income individuals.

(c) The term *low-income individual* means an individual who is determined by a State educational agency or local educational agency to be a child from a low-income family on the basis of data used by the Secretary to determine allocations under section 1124 of the ESEA, data on children eligible for free or reduced-price lunches under the National School Lunch Act, data on children in families receiving assistance under Part A of Title IV of the Social Security Act, or data on children eligible to receive medical assistance under the Medicaid program under title XIX of the Social Security Act, or through an alternate method that

combines or extrapolates from those data.

Supplement, Not Supplant, Rule

Funds provided under this program must be used only to supplement and not supplant other non-Federal funds that are available to assist low-income individuals in paying advanced placement test fees.

Waiver of Proposed Rulemaking

In accordance with the Administrative Procedure Act (5 U.S.C. 553), it is the practice of the Secretary to offer interested parties the opportunity to comment on proposed rules that are not taken directly from the statute. Ordinarily, this practice would have applied to the rules in this notice. Section 437(d)(2) of the General Education Provisions Act (GEPA), however, exempts from this rulemaking requirement those rules where the Secretary determines that it will cause extreme hardship to the intended beneficiaries of the program affected by the regulations. The Secretary, in accordance with section 437(d)(2) of GEPA, has decided to forgo public comment with respect to the rules in this grant competition in order to ensure timely and high-quality awards. These rules will apply only to the FY 2003 grant competition.

For Applications Contact: Education Publications Center (ED Pubs), P.O. Box 1398, Jessup, MD 20794–1398. Telephone (toll free): 1–877–433–7827. FAX: (301) 470–1244. If you use a telecommunications device for the deaf (TDD) you may call (toll free): 1–877–576–7734.

You may also contact ED Pubs at its Web site: *http://www.ed.gov/pbs/edpubs.html.*

Or you may contact ED Pubs at its e-mail address: *edpubs@inet.ed.gov.*

If you request an application from ED Pubs, be sure to identify this competition as follows: CFDA number 84.330C.

FOR FURTHER INFORMATION CONTACT: Madeline E. Baggett, U.S. Department of Education, 400 Maryland Avenue, SW., room 3E228, Washington, DC 20202–6140. Telephone: (202) 260–2502 or via Internet: *madeline.baggett@ed.gov.*

If you use a telecommunications device for the deaf (TDD), you may call the Federal Information Relay Service (FIRS) at 1–800–877–8339.

Individuals with disabilities may obtain this document in an alternative format (*e.g.*, Braille, large print, audiotape, or computer diskette) on request to the program contact person listed under **FOR FURTHER INFORMATION CONTACT.**

Individuals with disabilities may obtain a copy of the application package in an alternative format by contacting that person. However, the Department is not able to reproduce in an alternative format the standard forms included in the application package.

Electronic Access to this Document

You may view this document, as well as all other Department of Education documents published in the **Federal Register**, in text or Adobe Portable Document Format (PDF) on the Internet at the following site: *http://www.ed.gov/legislation/FedRegister.*

To use PDF, you must have Adobe Acrobat Reader, which is available free at this site. If you have questions about using PDF, call the U.S. Government Printing Office (GPO), toll free, at 1–888–293–6498; or in the Washington, DC area at (202) 512–1530.

Individuals with disabilities may obtain this document in an alternative format (*e.g.*, Braille, large print, audiotape, or computer diskette) on request using the contact information provided under *For Applications Contact.*

Note: The official version of this document is the document published in the **Federal Register**. Free Internet access to the official edition of the **Federal Register** and the Code of Federal Regulations is available on GPO Access at: *http://www.access.gpo.gov/nara/index.html.*

Program Authority: 20 U.S.C. 6535–6537.

Dated: May 9, 2003.

Nina Rees,

Deputy Under Secretary for Innovation and Improvement.

[FR Doc. 03–12118 Filed 5–14–03; 8:45 am]

BILLING CODE 4000–01–P

Federal Register

Thursday,
May 15, 2003

Part IV

Department of Education

Office of Innovation and Improvement—Arts in Education Model Development and Dissemination Grant Program; Notice Inviting Applications for New Grant Awards for Fiscal Year (FY) 2003; Notice

DEPARTMENT OF EDUCATION

[CFDA No. 84.351D]

Office of Innovation and Improvement—Arts in Education Model Development and Dissemination Grant Program; Notice Inviting Applications for New Grant Awards for Fiscal Year (FY) 2003

Note to Applicants: This notice is a complete application package. Together with the statute authorizing these grants and the Education Department General Administrative Regulations (EDGAR), this notice contains all of the information, application forms, and instructions needed to apply for an Arts in Education Model Development and Dissemination grant under this competition. This grant program is authorized by Title V, Part D, Subpart 15 of the Elementary and Secondary Education Act (ESEA) as reauthorized by the No Child Left Behind Act of 2001 (NCLB).

Purpose of Program: The Arts in Education Model Development and Dissemination Grant Program supports the development, documentation, evaluation and dissemination of innovative, cohesive models that have demonstrated their effectiveness in (1) integrating arts into the core elementary and middle school curricula, (2) strengthening arts instruction in these grades, and (3) improving students' academic performance, including their skills in creating, performing, and responding to the arts.

The Arts in Education Model Development and Dissemination Grant Program provides resources that local educational agencies (LEAs) and other eligible applicants can use in pursuit of the objectives of the No Child Left Behind Act which aims for all elementary and secondary students to achieve high standards. This program provides an opportunity for eligible entities to develop programs in schools identified for improvement, corrective action, or restructuring under Title I, Part A of the ESEA.

Eligible Applicants: (1) One or more LEAs, including charter schools that are considered LEAs under State law and regulations, that may work in partnership with one or more of the following:

- State or local non-profit or governmental arts organizations.
- State educational agencies (SEAs) or regional educational service agencies.
- Institutions of higher education.
- Other public and private agencies, institutions, and organizations with expertise in the arts.

(2) One or more State or local non-profit or governmental arts organizations that must work in partnership with one or more LEAs and may partner with one or more of the following:

- SEAs or regional educational service agencies.
- Institutions of higher education.
- Other public and private agencies, institutions, and organizations with expertise in the arts.

Note: If more than one LEA or arts organization wishes to form a consortium and jointly submit a single application, they must follow the procedures for group applications described in 34 CFR 75.127–75.129 of EDGAR.

Notification of Intent to Apply for Funding: The Department will be able to develop a more efficient process for reviewing grant applications if it has an estimate of the number of entities that intend to apply for funding under this competition. Therefore, the Secretary strongly encourages each potential applicant to notify the Department with a short e-mail noting the intent to submit an application for funding. The e-mail need not include information regarding the content of the proposed application, only the applicant's intent to submit it. The Secretary requests that this e-mail notification be sent no later than June 16, 2003. The e-mail notification should be sent to *Diane.Austin@ed.gov.* Applicants that fail to provide this e-mail notification may still apply for funding.

Deadline for Transmittal of Applications: 7–10–03.

Deadline for Intergovernmental Review: 9–8–03.

Estimated Available Funds: $8,360,300.

Estimated Range of Awards: $293,000–$836,000 (total for the 3-year project period. Funding of continuation awards after the initial year of funding is contingent upon future Congressional appropriations for the program).

Estimated Average Size of Awards: 750,000 total for the 3-year project period; equates to an average of $250,000 per year.

Estimated Number of Awards: 33.

Note: The Department of Education is not bound by any estimates in this notice.

Project Period: Up to 36 months.

Note: Applicants for multi-year awards are required to provide detailed budget information for the total grant period requested. The Secretary will determine at the time of the initial award the funding levels for each year of the grant award.

Project Directors Meeting. Applicants should budget for a two-day meeting for project directors in Washington, DC.

Applicable Regulations and Statute: (a) *Regulations.* EDGAR in 34 CFR Parts 75, 77, 79, 80, 81, 82, 85, 86, 97, 98, and 99. (b) *Statute.* Title V, Part D, Subpart 15, of the Elementary and Secondary Education Act as reauthorized by the No Child Left Behind Act of 2001.

Coordination Requirement: Under section 5551(f)(1) of the ESEA, the Secretary requires that each entity funded under this program coordinate, to the extent practicable, each project or program carried out with such assistance with appropriate activities of public or private cultural agencies, institutions, and organizations, including museums, arts education association, libraries and theaters.

Supplement, Not Supplant, Requirement: Under section 5551(f)(2) of the authorizing statute, the Secretary requires that assistance provided under this program be used only to supplement, and not supplant, other assistance or funds made available from non-federal sources for the activities assisted under this subpart.

SUPPLEMENTARY INFORMATION: While many schools and districts have moved swiftly in recent years to reform and enhance traditional core academic programs, most have not made similar efforts to integrate arts effectively into the regular curriculum, either as a vehicle by which to strengthen other core academic subjects or as an academic discipline in its own right. High-quality programs effectively integrating and improving arts instruction are increasingly important as students face the demands of the information age in the 21st century. Creating, performing, and responding to works of art builds creativity, self-confidence, and critical thinking skills—qualities central to success in school, work, and life.

For several reasons, high-quality arts and art education programs have implications for other areas of students' academic development. Studies have found that improving the quality of arts education has a particularly positive impact on students from low-income backgrounds. Unfortunately, students from low socioeconomic backgrounds are almost twice as likely to attend arts-poor schools, while students from socio-economically advantaged backgrounds are twice as likely to attend ''arts-rich'' schools.

The Arts in Education Model Development and Dissemination Grant Program seeks to address the lack of high quality, research-based models by encouraging partnerships of arts and education specialists to further develop and document effective models for improving arts education and student achievement—particularly for students

from poor and disadvantaged backgrounds.

Description of Program: The Arts in Education Model Development and Dissemination Grant program is authorized under section 5551, Part D, Subpart 15 of Title V of the ESEA. The Arts in Education Model Development and Dissemination Grant program furthers the development of promising comprehensive models for integrating arts into the school curriculum. In this case, ''integrating'' should be understood as both strengthening the use of high-quality arts within other academic instruction and strengthening the place of arts as a core academic subject in the regular school curriculum.

This program seeks to provide more communities with solid information regarding innovative, research-based models for effectively strengthening arts instruction, improving students' skills in creating, performing, and responding to works of arts, and increasing student achievement in other academic subjects.

These grants are designed to enable LEAs and organizations with arts expertise to further develop and create materials for the replication or adaptation of current comprehensive approaches for integrating a range of arts disciplines—such as music, dance, theater, and visual arts, including folk arts—into the elementary and middle school curriculum. Such development work should yield more systematic information about effective models that provide quality arts instruction and use the arts to enhance instruction in other core academic subjects.

Use of funds may include, but are not limited to all of the following activities:

- Field testing and evaluating nascent educational strategies;
- Field testing and evaluating model in-service and pre-service professional development programs for arts educators and other instructional staff;
- Ensuring comprehensive coverage of the arts disciplines—such as visual arts, dance, music, and theater, including the folk arts;
- Developing partnerships among schools, arts organizations, and others with expertise in the arts to combine resources and enhance the quality and sustainability of effective programming;
- Creating materials documenting the implementation and achievement of the model program for other educators and agencies; and
- Obtaining the services of outside experts in the implementation and assessment of the model. (This might include assistance in such areas as curriculum development, implementation strategies, data collection, evaluation design, or other appropriate activities.)

Application Requirements

To be eligible for Arts in Education Model Development and Dissemination funds, applicants must propose to—

(1) Further the development of programs designed to improve or expand the integration of arts education in elementary or middle school curricula;

(2) Develop materials designed to help replicate or adapt the program;

(3) Document the program's outcomes and benefits; and

(4) Develop products and services that can be used to replicate the program in other settings.

Grant applications must describe an existing set of strategies for integrating the arts into the regular elementary and middle school curriculum. These strategies would then be successfully implemented, expanded, documented, evaluated, and disseminated. Taken together, these strategies and methods must comprise a research-based, comprehensive arts in education model that—

- Is based, to the extent possible, on the most rigorous theory, research, and evaluation available, and is effective in improving student achievement and performance and other program objectives;
- Is linked to State and national standards enabling all students to meet challenging expectations, and to improving student and school performance;
- Has the potential to improve students' achievement both in creating, performing, and responding to works of art and in other core academic subjects;
- Demonstrates the feasibility of further replication and dissemination;
- Is applicable to a broad range of high-poverty and disadvantaged, rural and urban schools, including those that are chronically low-performing;
- Makes effective use of technology to further the model's goals;
- Describes methods by which the applicant will assess the model's outcomes; and
- Describes activities that, to the extent possible, coordinate model development with relevant activities of public and private cultural agencies, institutions, and organizations, such as museums, arts education associations, libraries, and theaters. (20 U.S.C. 7271 (f)(1))

In addition to any dissemination work in which the applicants choose to engage, the Department intends to take the products and information resulting from these demonstration grants and share them widely with other communities. Upon completion of the project, the Department requires that any materials or products developed as a part of model development activities be provided to the Department for further dissemination. Such activities will be carried out in full compliance with copyright requirements.

Priorities: Under 34 CFR 75.105(c)(3) we consider only applications that meet the following absolute priority.

Absolute Priority: The Secretary will only fund applications from eligible applicants that propose to work with at least one elementary and/or middle school with no less than 35 percent of its students from low-income families based on poverty criteria set out in Title I, section 1113(a)(5) of the ESEA, and that propose projects that meet all of the requirements described under APPLICATION REQUIREMENTS.

Competitive Priorities: This competition focuses on projects designed to meet the following priorities. Under 34 CFR 75.105(c)(2)(i), we award up to an additional 25 points depending on how well the application meets the priorities. These points are in addition to any points the application earns under the selection criteria.

Competitive Priority 1—Projects in rural or inner-city communities: The Secretary will award five (5) points to projects proposing models that involve schools in rural or inner-city communities.

Competitive Priority 2—Research-based evaluation: The project is designed to determine, through a rigorous evaluation, whether the implemented program produces meaningful effects on student achievement or teacher performance. Evaluations using an experimental design are best for determining program effectiveness. Thus, the project preferably uses an experimental design under which participants—that is, students, teachers, classrooms, or schools—are randomly assigned (a) to receive the program being evaluated or (b) to be in a control group that does not receive the program. Evaluations using an experimental design will receive up to 20 points in addition to any points the application earns under the selection criteria.

If random assignment is not feasible, the project may use a quasi-experimental design with carefully matched comparison conditions. This alternative design attempts to approximate a randomly assigned control group by matching program participants-that is, students, teachers, classrooms or schools—with non-participants having similar pre-program

characteristics. Evaluations of this type will receive up to 15 points in addition to any points the application earns under the selection criteria.

Proposed evaluations that use neither experimental designs with random assignment nor quasi-experimental designs using a matched comparison group will receive 0 points under this competitive preference priority.

Before and after participation in the program or the comparison condition, the project evaluator should collect—before the program commences and after it ends—valid and reliable data that measure the impact of participation in the program or in the comparison group.

We determine points under this priority by the quality of the proposed evaluation. We will consider the extent to which the applicant presents a feasible, credible plan that includes the following:

- The type of design to be used (that is, random assignment or matched comparison).
- Outcomes to be measured.
- A discussion of how the applicant plans to assign students, teachers, classrooms, or schools to the program or match them for comparison with other students, teachers, classrooms, or schools.
- A proposed evaluator, preferably independent, with the necessary background and technical expertise to carry out the proposed evaluation.

Definitions: In addition to definitions in the statute and EDGAR, the following definitions apply:

Inner-City Community, for the purpose of this program, is any place that fits code 1, 2 or 3 of the National Center for Educational Statistics (NCES) locale codes. The locale codes are:

1. Central city of a Consolidated Metropolitan Statistical Area (CMSA) or Metropolitan Statistical Area (MSA) with population of 250,000 or more or a population.
2. Central city of a CMSA or MSA but not designated as a large central city.
3. Place within the CMSA or MSA of a large central city.
4. Place within the CMSA or MSA of a mid-size central city.
5. Place not within a CMSA or MSA but with population of 25,000 or more and defined as urban.
6. Place not within a CMSA or MSA with a population of at least 2,500 but less than 25,000.
7. Place not within a CMSA or MSA and designated as rural.
8. Place within a CMSA or MSA designated as rural (this code not available prior to 1998).

Research-based, when used with respect to an activity or a program, means that, to the extent possible, the activity or program is based on the most rigorous theory, research, and evaluation available and is effective in improving student achievement and performance and other program objectives.

Rural, for the purpose of this program, is any place that fits 6, 7 or 8 of the NCES locale codes. Please see the list under the definition of Inner-City Community.

Waiver of Proposed Rulemaking: In accordance with the Administrative Procedure Act (5 U.S.C. 553), it is the practice of the Secretary to offer interested parties the opportunity to comment on proposed rules. Section 437(d)(1) of the General Education Provisions Act (GEPA), however, allows the Secretary to exempt from rulemaking requirements rules governing the first grant competition under a new or substantially revised program authority (20 U.S.C. section 1232(d)(1)). This program is the first Model Arts competition under the program as reauthorized by Public Law 107–100, the No Child Left Behind Act of 2001, and therefore qualifies for this exemption. The Secretary, in accordance with section 437(d)(1) of GEPA has decided to forego public comment in order to ensure timely grant awards. These rules will apply for the FY 2003 competition only.

Selection Criteria: The Secretary uses the following selection criteria to evaluate applications for grants under this competition. In all instances where the word ''project'' appears in the selection criteria, the reference to an Arts in Education Model Development and Dissemination grant program should be made.

The maximum composite score for all of these criteria is 100 points. The maximum score an applicant may receive is 125 if they fully meet both of the competitive priorities.

The maximum score for each criterion is indicated in parentheses. Within each criterion, the Secretary evaluates each factor equally.

(a) *Need for project.* (10 points)

In determining the need for the proposed project, the Secretary considers the following factors:

(i) The extent to which the model addresses specific needs of students at risk of educational failure.

(ii) The extent to which specific gaps, weaknesses, or opportunities have been identified in effectively integrating arts into the core curricula, strengthening arts instruction and improving students' academic performance, including skills in creating, performing, and responding to the arts. Also, the nature and magnitude of those gaps or weaknesses and the degree to which they will be addressed by the proposed model.

(b) *Significance.* (20 points)

In determining the significance of the proposed project, the Secretary considers the following factors:

(i) The potential contribution of the proposed project to increased knowledge or understanding of effective strategies for strengthening the use of high-quality arts in the course of other academic instruction and/or strengthening the place of arts as a core academic subject in the regular school curricula.

(ii) The likely utility and replicability of the proposed model and the extent to which its products (including information, materials, processes, or techniques) will be effective in a variety of settings.

(c) *Quality of the project design.* (30 points)

In determining the quality of the design of the proposed project, the Secretary considers the following factors:

(i) The extent to which the goals, objectives, and outcomes to be achieved over the proposed project period are clearly specified and measurable.

(ii) The extent to which the proposed model is based on reliable research, effective practice, and/or coherent theory as a means for strengthening the use of high-quality arts in the course of other academic instruction and/or strengthening the place of arts as a core academic subject in the regular school curricula.

(iii) The extent to which the proposed model aims to strengthen the academic performance of students in creating, performing, and responding to the arts, and in the rest of the core curriculum.

(iv) The extent to which the project will document and evaluate the success of the model and disseminate relevant information.

(d) *Quality of the management plan.* (15 points)

In determining the quality of the management plan for the proposed project, the Secretary considers the following factors:

(i) The adequacy of the management plan to achieve the objectives of the proposed project on time and within budget, including clearly defined responsibilities, relevant contributions and commitment from partners, timelines, continuous improvement strategies, and milestones for accomplishing project tasks.

(ii) The qualifications, including relevant training and experience of key project personnel, major partners,

project consultants, and/or subcontractors.

(e) *Quality of the project evaluation.* (25 points)

In determining the quality of the evaluation, the Secretary considers the following factors:

(i) The extent to which the methods of evaluation are rigorous, thorough, feasible, and appropriate to the goals, objectives, and outcomes of the proposed project.

(ii) The extent to which the methods of evaluation include the use of objective performance measures that are clearly related to the intended outcomes of the project and will produce quantitative and qualitative data on the results of the program.

(iii) The extent to which the evaluation will provide guidance about effective strategies suitable for replication or testing in other settings.

Intergovernmental Review of Federal Programs

This program is subject to Executive Order 12372 (Intergovernmental Review of Federal Programs) and the regulations in 34 CFR Part 79.

One of the objectives of the Executive order is to foster an intergovernmental partnership and a strengthened federalism. The Executive order relies on processes developed by State and local governments for coordination and review of proposed Federal financial assistance.

If you are an applicant, you must contact the appropriate State Single Point of Contact (SPOC) to find out about, and to comply with, the State's process under Executive Order 12372. If you propose to perform activities in more than one State, you should immediately contact the SPOC for each of those States and follow the procedure established in each State under the Executive order. If you want to know the name and address of any SPOC, see the latest official SPOC list on the Web site of the Office of Management and Budget at the following address: *http://www.whitehouse.gov/omb/grants/spoc.html.* In States that have not established a process or chosen a program for review, State, areawide, regional, and local entities may submit comments directly to the Department.

Any State Process Recommendation and other comments submitted by a SPOC and any comments from State, areawide, regional, and local entities must be mailed or hand-delivered by the date indicated in this application notice to the following address: The Secretary, E.O. 12372–CFDA #84.351D, U.S. Department of Education, room 7E200, 400 Maryland Avenue, SW., Washington, DC 20202–0125.

We will determine proof of mailing under 34 CFR 75.102 (Deadline date for applications). Recommendations or comments may be hand-delivered until 4:30 p.m. (Washington, DC time) on the date indicated in this notice.

Please note that this address is not the same address as the one to which an applicant submits its completed application. Do not send applications to the above address.

Application Instructions and Forms

The Appendix to this notice contains forms and instructions, a statement regarding estimated public reporting burden, a notice to applicants regarding compliance with section 427 of the General Education Provisions Act, and various assurances and certifications. Please organize the parts and additional materials in the following order:

- Application for Federal Education Assistance (ED 424 (Exp. 11/30/2004)) and instructions and definitions.
- Protection of Human Subjects in Research (Attachment to ED 424).
- Budget Information—Non-Construction Programs (ED Form No. 524) and instructions.
- Application Narrative.
- Assurances—Non-Construction Programs (Standard Form 424B) (Rev. 7–97).
- Certifications regarding Lobbying; Debarment, Suspension, and Other Responsibility Matters; and Drug-Free Workplace Requirements (ED 80–0013, 12/98) and instructions.
- Certification regarding Debarment, Suspension, Ineligibility and Voluntary Exclusion: Lower Tier Covered Transactions (ED 80–0014, 9/90) and instructions. (NOTE: ED 80–0014 is intended for the use of grantees and should not be transmitted to the Department.)
- Certification of Eligibility for Federal Assistance in Certain Programs (ED 80–0016 9/92)).
- Disclosure of Lobbying Activities (Standard Form LLL (Rev. 7–97)) and instructions.
- Survey on Ensuring Equal Opportunity for Applicants and survey instructions.

You may submit information on a photocopy of the application and budget forms, the assurances, and the certifications. However, the application form, the assurances, and the certifications must each have an original signature. We will not award a grant unless we have received a completed application form.

Individuals with disabilities may obtain this document in an alternative format (*e.g.*, Braille, large print, audiotape, or computer diskette) on request to the program contact person listed under **FOR FURTHER INFORMATION CONTACT**. However, the Department is not able to reproduce in an alternative format the standard forms included in this application notice.

Electronic Access to This Document

You may view this document, as well as all other Department of Education documents published in the **Federal Register**, in text or Adobe Portable Document Format (PDF) on the Internet at the following site: *http://www.ed.gov/legislation/FedRegister.*

To use PDF you must have Adobe Acrobat Reader, which is available free at this site. If you have questions about using PDF, call the U.S. Government Printing Office (GPO), toll free, at 1–888–293–6498; or in the Washington, DC, area at (202) 512–1530.

Note: The official version of this document is the document published in the **Federal Register**. Free Internet access to the official edition of the **Federal Register** and the Code of Federal Regulations is available on GPO Access at: *http://www.access.gpo.gov/nara/index.html.*

FOR FURTHER INFORMATION CONTACT:

Diane Austin, U.S. Department of Education, 400 Maryland Avenue, SW., Washington, DC 20202–6140. Telephone: (202) 260–1280 or via Internet: *diane.austin@ed.gov.*

If you use a telecommunications device for the deaf (TDD), you may call the Federal Information Relay Service (FIRS) at 1–800–877–8339.

Application Procedures

The Government Paperwork Elimination Act (GPEA) of 1998, (Pub. L. 105–277) and the Federal Financial Assistance Management Improvement Act of 1999, (Pub. L. 106–107) encourage us to undertake initiatives to improve our grant processes. Enhancing the ability of individuals and entities to conduct business with us electronically is a major part of our response to these Acts. Therefore, we are taking steps to adopt the Internet as our chief means of conducting transactions in order to improve services to our customers and to simplify and expedite our business processes.

We are requiring that applications for grants for FY 2003 under the Arts in Education Model Development and Dissemination Grant program (CFDA #84.351D) be submitted electronically using e-Application available through the Department of Education's e-GRANTS system. The e-GRANTS system is accessible through its portal page at: *http://e-grants.ed.gov.*

Applicants who are unable to submit an application through the e-GRANTS system may apply for a waiver to the electronic submission requirement. To apply for a waiver, applicants must explain the reason or reasons that prevent them from using the Internet to submit their applications. The reasons must be outlined in a letter addressed to: Diane Austin, U.S. Department of Education, 400 Maryland Avenue, SW., room 3C124, Washington, DC 20202–6140. We must receive your letter no later than two weeks before the deadline for transmittal of applications.

Any application that receives a waiver to the electronic submission requirement will be given the same consideration in the review process as an electronic application.

Pilot Project for Electronic Submission of Applications

In FY 2003, the U.S. Department of Education is continuing to expand its pilot project for electronic submission of applications to include additional formula grant programs and additional discretionary grant competitions. The Arts in Education Model Development and Dissemination Grant program (CFDA #84.351D) is one of the programs included in the pilot project. If you are an applicant under the Arts in Education Model Development and Dissemination Grant program, you must submit your application to us in electronic format or receive a waiver.

The pilot project involves the use of the Electronic Grant Application System (e-Application) Users of e-Application will be entering data on-line while completing their applications. You may not e-mail a soft copy of a grant application to us. The data you enter on-line will be saved into a database. We request your participation in e-Application. We shall continue to evaluate its success and solicit suggestions for improvement.

In submitting an electronic application, please note the following:

- You will not receive any additional point value because you submit a grant application in electronic format, nor will we penalize you if you submit an application in paper format. (**Note:** We accept your submission of an application in paper format only if we have granted you a waiver as described in the preceding section of this notice.)
- When you enter the e-Application system, you will find information about its hours of operation.
- You must submit all documents electronically, including the Application for Federal Education Assistance (ED 424), Budget Information—Non-Construction Programs (ED 524), and all necessary assurances and certifications.
- After you electronically submit your application, you will receive an automatic acknowledgement, which will include a PR/Award number (an identifying number unique to your application).
- Within three working days after submitting your electronic application, fax a signed copy of the Application for Federal Education Assistance (ED 424) to the Application Control Center after following these steps:

1. Print ED 424 from the e-Application system.

2. The institution's Authorizing Representative must sign this form.

3. Place the PR/Award number in the upper right hand corner of the hard copy signature page of the ED 424.

4. Fax the signed ED 424 to the Application Control Center at (202) 260–1349.

- We may request that you give us original signatures on all other forms at a later date.
- *Closing Date Extension in Case of System Unavailability:* If you are prevented from submitting your application on the closing date because the e-Application system is unavailable, we will grant you an extension of one business day in order to transmit your application electronically, by mail, or by hand delivery. For us to grant this extension—

1. You must be a registered user of e-Application, and have initiated an e-Application for this competition; and

2. (a) The e-Application system must be unavailable for 60 minutes or more between the hours of 8:30 a.m. and 3:30 p.m., Washington, DC time, on the deadline date; or

(b) The e-Application system must be unavailable for any period of time during the last hour of operation (that is, for any period of time between 3:30 and 4:30 p.m., Washington, DC time) on the deadline date.

The Department must acknowledge and confirm these periods of unavailability before granting you an extension. To request this extension you must contact either (1) the person listed elsewhere in this notice under **FOR FURTHER INFORMATION CONTACT** or (2) the e-GRANTS help desk at 1–888–336–8930.

We have included additional information about the e-Application pilot project (see Parity Guidelines between Paper and Electronic Applications) elsewhere in this notice.

Instructions for Transmitting Applications

If you want to apply for a grant and be considered for funding, you must meet these deadline requirements:

- If you apply for and we grant you a waiver from the electronic submission requirement, you must follow the transmittal instructions under (A) If You Send Your Application by Mail or (B) If You Deliver Your Application by Hand.
- Otherwise, you must follow the transmittal instructions under (C) If You Submit Your Application Electronically.

(A) *If You Send Your Application by Mail:* You must mail the original and two copies of the application on or before the deadline date. One copy of the application should be unbound and suitable for photocopying. To expedite our review of your application, we would appreciate you voluntarily including an additional three copies of your application. We will not penalize applicants who do not provide additional copies. Mail your application to: U.S. Department of Education, Application Control Center, Attention: CFDA #84.351D, 7th & D Streets, SW., Room 3671, Regional Office Building 3, Washington, DC 20202–4725.

You must show one of the following as proof of mailing:

(1) A legibly dated U.S. Postal Service postmark.

(2) A legible mail receipt with the date of mailing stamped by the U.S. Postal Service.

(3) A dated shipping label, invoice, or receipt from a commercial carrier.

(4) Any other proof of mailing acceptable to the Secretary.

If you mail an application through the U.S. Postal Service, we do not accept either of the following as proof of mailing:

(1) A private metered postmark.

(2) A mail receipt that is not dated by the U.S. Postal Service.

(B) *If You Deliver Your Application by Hand:* You or your courier must hand deliver the original and two copies of the application by 4:30 p.m. (Washington, DC time) on or before the deadline date. One copy of the application should be unbound and suitable for photocopying. To expedite our review of your application, we would appreciate you voluntarily including an additional three copies of your application. We will not penalize applicants who do not provide additional copies. Deliver your application to: U.S. Department of Education, Application Control Center, Attention: CFDA #84.351D, 7th & D Streets, SW., Room 3671, Regional Office Building 3, Washington, DC 20202–4725.

The Application Control Center accepts application deliveries daily between 8 a.m. and 4:30 p.m. (Washington, DC time), except Saturdays, Sundays, and Federal holidays. The Center accepts application deliveries through the D Street entrance only. A person delivering an application must show identification to enter the building.

(C) *If You Submit Your Application Electronically:* You must submit your grant application through the Internet using the software provided on the e-Grants Web site (*http://e-grants.ed.gov*) by 4:30 p.m. (Washington, DC time) on the deadline date.

The regular hours of operation of the e-Grants Web site are 6 a.m. Monday until 7 p.m. Wednesday; and 6 a.m. Thursday until midnight Saturday (Washington, DC time). The system is unavailable on Sunday and Federal holidays and is closed for maintenance at 7 p.m. (Washington, DC time) on Wednesday.

Notes

(1) The U.S. Postal Service does not uniformly provide a dated postmark. Before relying on this method, you should check with your local post office.

(2) If you send your application by mail or if you or your courier deliver it by hand, the Application Control Center will mail a Grant Application Receipt Acknowledgment to you. If you do not receive the notification of application receipt within 15 days from the date of mailing the application, you should call the U.S. Department of Education Application Control Center at (202) 708–9493.

(3) If your application is late, we will notify you that we will not consider the application.

(4) You must indicate on the envelope and—if not provided by the Department—in Item 4 of the Application for Federal Education Assistance (ED 424 (exp. 11/30/2004)) the CFDA number—and suffix letter, if any—of the competition under which you are submitting your application.

(5) If you submit your application through the Internet via the e-Grants Web site, you will receive an automatic acknowledgment when we receive your application.

Parity Guidelines Between Paper and Electronic Applications

In FY 2003, the U.S. Department of Education is continuing to expand the pilot project that allows applicants to use an Internet-based electronic system for submitting applications. This competition is among those that provide for the electronic submission of applications by all applicants. Under this system, called e-APPLICATION, an applicant submits a grant application to us electronically, using a current version of the applicant's Internet browser. To see e-APPLICATION visit the following address: *http://e-grants.ed.gov.*

Users of e-APPLICATION, a data driven system, will be entering data on-line while completing their applications. This will be more interactive than just e-mailing a soft copy of a grant application to us. If you submit an application electronically, the data you enter on-line will go into a database and ultimately will be accessible in electronic form to our reviewers.

This pilot project continues the Department's transition to an electronic grant award process. In addition to e-APPLICATION, the Department plans to expand the number of discretionary programs using the electronic peer review (e-READER) system and to increase the participation of discretionary programs offering grantees the use of the electronic annual performance reporting (e-REPORTS) system.

Because this competition mandates the filing of electronic applications, the following guidelines apply only if—as described elsewhere in this notice—we have granted you a waiver to submit an application in paper format.

To help ensure parity and a similar look between electronic and paper copies of grant applications, we are asking each applicant that submits a paper application to adhere to the following guidelines:

- Submit your application on 8½″ by 11″ paper.
- Leave a 1-inch margin on all sides.
- Use consistent font throughout your document. You may also use boldface type, underlining, and italics. However, please do not use colored text.
- Please use black and white, also, for illustrations, including charts, tables, graphs and pictures.
- For the narrative component, your application should consist of the number and text of each selection criterion followed by the narrative. The text of the selection criterion, if included, does not count against any page limitation.
- Place a page number at the bottom right of each page beginning with 1, and number your pages consecutively throughout your document.

Program Authority: 20 U.S.C. 7271 *et seq.*

Dated: May 9, 2003.

Nina S. Rees,

Deputy Under Secretary for Innovation and Improvement.

Appendix

Instructions for Estimated Public Reporting Burden

According to the Paperwork Reduction Act of 1995, you are not required to respond to a collection of information unless it displays a valid OMB control number. The valid OMB control number for this collection of information is 1855–0006. Expiration date: May 31, 2004. We estimate the time required to complete this collection of information to average 60 hours per response, including the time to review instructions, search existing data sources, gather the data needed, and complete and review the collection of information. If you have any comments concerning the accuracy of the time estimate or suggestions for improving this form, please write to: U.S. Department of Education, 400 Maryland Avenue, SW., Washington, DC 20202–4651.

If you have comments or concerns regarding the status of your submission of this form, write directly to: Diane Austin, U.S. Department of Education, 400 Maryland Avenue, SW., Washington, DC 20202–6140.

Instructions for Application Narrative

Before preparing the Application Narrative you should read carefully the description of the program, the information regarding priorities, and the selection criteria we use to evaluate applications.

The narrative should—

1. Begin with an abstract; that is, a summary of your proposed project;
2. Describe your proposed project in light of each of the selection criteria in the order in which we list the criteria in this notice;
3. List each function or activity for which you are requesting funds; and
4. Include any other pertinent information that might assist us in reviewing your application. When applying for funds as a consortium, individual eligible applicants must enter into an agreement signed by all members. The consortium's agreement must detail the activities each member of the consortium plans to perform, and must bind each member to every statement and assurance made in the consortium's application. The designated applicant must submit the consortium's agreement with its application.

Note: The section on PAGE LIMIT elsewhere in this application notice applies to your application.

Instructions for Budget Narrative

The budget should reflect costs that are reasonable and necessary for administration, and for developing and implementing activities described in the narrative. Complete ED Form 524 Section A—Budget Summary U.S. Department of Education Funds to indicate funds requested for the 36-month project period. Complete ED Form Section B—Non-Federal Funds to indicate support from other public or private United States sources.

Fill in columns (a) Project Year 1; (b) Project Year 2; Project Year 3; and (f) Total. In addition to ED Form 524, applicants must attach budget detail pages that itemize and explain the costs requested for each budget category for each year of the project. The budget forms and budget detail pages are not included in the page limit.

Note: Successful applicants will be expected to report annually on the progress of each project or study included in the grant,

including a description of preliminary or key findings and an explanation of any changes in goals, objectives, methodology, or planned products or publications.

BILLING CODE 4000–01–P

OMB Control No. 1890-0007 (Exp. 09/30/2004)

NOTICE TO ALL APPLICANTS

The purpose of this enclosure is to inform you about a new provision in the Department of Education's General Education Provisions Act (GEPA) that applies to applicants for new grant awards under Department programs. This provision is Section 427 of GEPA, enacted as part of the Improving America's Schools Act of 1994 (Public Law (P.L.) 103-382).

To Whom Does This Provision Apply?

Section 427 of GEPA affects applicants for new grant awards under this program. **ALL APPLICANTS FOR NEW AWARDS MUST INCLUDE INFORMATION IN THEIR APPLICATIONS TO ADDRESS THIS NEW PROVISION IN ORDER TO RECEIVE FUNDING UNDER THIS PROGRAM.**

(If this program is a State-formula grant program, a State needs to provide this description only for projects or activities that it carries out with funds reserved for State-level uses. In addition, local school districts or other eligible applicants that apply to the State for funding need to provide this description in their applications to the State for funding. The State would be responsible for ensuring that the school district or other local entity has submitted a sufficient section 427 statement as described below.)

What Does This Provision Require?

Section 427 requires each applicant for funds (other than an individual person) to include in its application a description of the steps the applicant proposes to take to ensure equitable access to, and participation in, its Federally-assisted program for students, teachers, and other program beneficiaries with special needs. This provision allows applicants discretion in developing the required description. The statute highlights six types of barriers that can impede equitable access or participation: gender, race, national origin, color, disability, or age. Based on local circumstances, you should determine whether these or other barriers may prevent your students, teachers, etc. from such access or participation in, the Federally-funded project or activity. The description in your application of steps to be taken to overcome these barriers need not be lengthy; you may provide a clear and succinct description of how you plan to address those barriers that are applicable to your circumstances. In addition, the information may be provided in a single narrative, or, if appropriate, may be discussed in connection with related topics in the application.

Section 427 is not intended to duplicate the requirements of civil rights statutes, but rather to ensure that, in designing their projects, applicants for Federal funds address equity concerns that may affect the ability of certain potential beneficiaries to fully participate in the project and to achieve to high standards. Consistent with program requirements and its approved application, an applicant may use the Federal funds awarded to it to eliminate barriers it identifies.

What are Examples of How an Applicant Might Satisfy the Requirement of This Provision?

The following examples may help illustrate how an applicant may comply with Section 427.

(1) An applicant that proposes to carry out an adult literacy project serving, among others, adults with limited English proficiency, might describe in its application how it intends to distribute a brochure about the proposed project to such potential participants in their native language.

(2) An applicant that proposes to develop instructional materials for classroom use might describe how it will make the materials available on audio tape or in braille for students who are blind.

(3) An applicant that proposes to carry out a model science program for secondary students and is concerned that girls may be less likely than boys to enroll in the course, might indicate how it intends to conduct "outreach" efforts to girls, to encourage their enrollment.

We recognize that many applicants may already be implementing effective steps to ensure equity of access and participation in their grant programs, and we appreciate your cooperation in responding to the requirements of this provision.

Estimated Burden Statement for GEPA Requirements

According to the Paperwork Reduction Act of 1995, no persons are required to respond to a collection of information unless such collection displays a valid OMB control number. The valid OMB control number for this information collection is **1890-0007.** The time required to complete this information collection is estimated to average 1.5 hours per response, including the time to review instructions, search existing data resources, gather the data needed, and complete and review the information collection. **If you have any comments concerning the accuracy of the time estimate(s) or suggestions for improving this form, please write to:** Director, Grants Policy and Oversight Staff, U.S. Department of Education, 400 Maryland Avenue, SW (Room 3652, GSA Regional Office Building No. 3), Washington, DC 20202-4248.

Application for Federal Education Assistance (ED 424)

U.S. Department of Education
Form Approved
OMB No. 1875-0106
Exp. 11/30/2004

Applicant Information

1. Name and Address
Legal Name: _____
Address: _____
City _____ State _____ County _____ ZIP Code + 4 ____-____

Organizational Unit

2. Applicant's D-U-N-S Number [ ][ ][ ][ ][ ][ ][ ][ ][ ]

3. Applicant's T-I-N [ ][ ] - [ ][ ][ ][ ][ ][ ][ ]

4. Catalog of Federal Domestic Assistance #: 8 4 3 5 1 D
Title: Arts in Education Model Development and Dissemination Grant Program

5. Project Director: _____
Address: _____
City _____ State _____ ZIP Code + 4 ____-____
Tel. #: _____ Fax #: _____
E-Mail Address: _____

6. Novice Applicant ☐ Yes ☐ No

7. Is the applicant delinquent on any Federal debt? ☐ Yes ☐ No
(If "Yes," attach an explanation.)

8. Type of Applicant (Enter appropriate letter in the box.) [ ]

A State
B Local
C Special District
D Indian Tribe
E Individual
F Independent School District
G Public College or University
H Private, Non-Profit College or University
I Non-Profit Organization
J Private, Profit-Making Organization
K Other (Specify): _____

Application Information

9. Type of Submission:

—PreApplication
☐ Construction
☐ Non-Construction

—Application
☐ Construction
☐ Non-Construction

10. Is application subject to review by Executive Order 12372 process?
☐ Yes (Date made available to the Executive Order 12372 process for review): _____
☐ No (If "No," check appropriate box below.)
☐ Program is not covered by E.O. 12372.
☐ Program has not been selected by State for review.

11. Proposed Project Dates: Start Date: _____ End Date: _____

12. Are any research activities involving human subjects planned at any time during the proposed project period?
☐ Yes (Go to 12a.) ☐ No (Go to item 13.)

12a. Are all the research activities proposed designated to be exempt from the regulations?
☐ Yes (Provide Exemption(s) #): _____
☐ No (Provide Assurance #): _____

13. Descriptive Title of Applicant's Project:

Estimated Funding

14a. Federal	$	.00
b. Applicant	$	.00
c. State	$	.00
d. Local	$	.00
e. Other	$	.00
f. Program Income	$	.00
g. TOTAL	$ 0	.00

Authorized Representative Information

15. To the best of my knowledge and belief, all data in this preapplication/application are true and correct. The document has been duly authorized by the governing body of the applicant and the applicant will comply with the attached assurances if the assistance is awarded.

a. Authorized Representative (Please type or print name clearly.)

b. Title

c. Tel. #: _____ Fax #: _____

d. E-Mail Address:

e. Signature of Authorized Representative | Date: _____

Instructions for ED 424

1. Legal Name and Address. Enter the legal name of applicant and the name of the primary organizational unit which will undertake the assistance activity.

2. D-U-N-S Number. Enter the applicant's D-U-N-S Number. If your organization does not have a D-U-N-S Number, you can obtain the number by calling 1-800-333-0505 or by completing a D-U-N-S Number Request Form. The form can be obtained via the Internet at the following URL: http://www.dnb.com.

3. Tax Identification Number. Enter the taxpayer's identification number as assigned by the Internal Revenue Service.

4. Catalog of Federal Domestic Assistance (CFDA) Number. Enter the CFDA number and title of the program under which assistance is requested. The CFDA number can be found in the federal register notice and the application package.

5. Project Director. Name, address, telephone and fax numbers, and e-mail address of the person to be contacted on matters involving this application.

6. Novice Applicant. Check "Yes" or "No" only if assistance is being requested under a program that gives special consideration to novice applicants. Otherwise, leave blank.

   Check "Yes" if you meet the requirements for novice applicants specified in the regulations in 34 CFR 75.225 and included on the attached page entitled "Definitions for Form ED 424." By checking "Yes" the applicant certifies that it meets these novice applicant requirements. Check "No" if you do not meet the requirements for novice applicants.

7. Federal Debt Delinquency. Check "Yes" if the applicant's organization is delinquent on any Federal debt. (This question refers to the applicant's organization and not to the person who signs as the authorized representative. Categories of debt include delinquent audit disallowances, loans and taxes.) Otherwise, check "No."

8. Type of Applicant. Enter the appropriate letter in the box provided.

9. Type of Submission. See "Definitions for Form ED 424" attached.

10. Executive Order 12372. See "Definitions for Form ED 424" attached. Check "Yes" if the application is subject to review by E.O. 12372. Also, please enter the month, day, and four (4) digit year (e.g., 12/12/2001). Otherwise, check "No."

11. Proposed Project Dates. Please enter the month, day, and four (4) digit year (e.g., 12/12/2001).

12. Human Subjects Research. (See I.A. "Definitions" in attached page entitled "Definitions for Form ED 424.")

    If Not Human Subjects Research. Check "No" if research activities involving human subjects are not planned at any time during the proposed project period. The remaining parts of Item 12 are then not applicable.

    If Human Subjects Research. Check "Yes" if research activities involving human subjects are planned at any time during the proposed project period, either at the applicant organization or at any other performance site or collaborating institution. Check "Yes" even if the research is exempt from the regulations for the protection of human subjects. (See I.B. "Exemptions" in attached page entitled "Definitions for Form ED 424.")

12a. If Human Subjects Research is Exempt from the Human Subjects Regulations. Check "Yes" if all the research activities proposed are designated to be exempt from the regulations. Insert the exemption number(s) corresponding to one or more of the six exemption categories listed in I.B. "Exemptions." In addition, follow the instructions in II.A. "Exempt Research Narrative" in the attached page entitled "Definitions for Form ED 424." Insert this narrative immediately following the ED 424 face page.

12a. If Human Subjects Research is Not Exempt from Human Subjects Regulations. Check "No" if some or all of the planned research activities are covered (not exempt). In addition, follow the instructions in II.B. "Nonexempt Research Narrative" in the page entitled "Definitions for Form ED 424." Insert this narrative immediately following the ED 424 face page.

12a. Human Subjects Assurance Number. If the applicant has an approved Federal Wide (FWA) or Multiple Project Assurance (MPA) with the Office for Human Research Protections (OHRP), U.S. Department of Health and Human Services, that covers the specific activity, insert the number in the space provided. If the applicant does not have an approved assurance on file with OHRP, enter "None." In this case, the applicant, by signature on the face page, is declaring that it will comply with 34 CFR 97 and proceed to obtain the human subjects assurance upon request by the designated ED official. If the application is recommended/selected for funding, the designated ED official will request that the applicant obtain the assurance within 30 days after the specific formal request.

    Note about Institutional Review Board Approval. ED does not require certification of Institutional Review Board approval with the application. However, if an application that involves non-exempt human subjects research is recommended/selected for funding, the designated ED official will request that the applicant obtain and send the certification to ED within 30 days after the formal request.

13. Project Title. Enter a brief descriptive title of the project. If more than one program is involved, you should append an explanation on a separate sheet. If appropriate (e.g., construction or real property projects), attach a map showing project location. For preapplications, use a separate sheet to provide a summary description of this project.

14. Estimated Funding. Amount requested or to be contributed during the first funding/budget period by each contributor. Value of in-kind contributions should be included on appropriate lines as applicable. If the action will result in a dollar change to an existing award, indicate only the amount of the change. For decreases, enclose the amounts in parentheses. If both basic and supplemental amounts are included, show breakdown on an attached sheet. For multiple program funding, use totals and show breakdown using same categories as item 14.

15. Certification. To be signed by the authorized representative of the applicant. A copy of the governing body's authorization for you to sign this application as official representative must be on file in the applicant's office. Be sure to enter the telephone and fax number and e-mail address of the authorized representative. Also, in item 15e, please enter the month, day, and four (4) digit year (e.g., 12/12/2001) in the date signed field.

Paperwork Burden Statement. According to the Paperwork Reduction Act of 1995, no persons are required to respond to a collection of information unless such collection displays a valid OMB control number. The valid OMB control number for this information collection is 1875-0106. The time required to complete this information collection is estimated to average between 15 and 45 minutes per response, including the time to review instructions, search existing data resources, gather the data needed, and complete and review the information collection. If you have any comments concerning the accuracy of the estimate(s) or suggestions for improving this form, please write to: U.S. Department of Education, Washington, D.C. 20202-4651. If you have comments or concerns regarding the status of your individual submission of this form write directly to: Joyce I. Mays, Application Control Center, U.S. Department of Education, 7th and D Streets, S.W. ROB-3, Room 3633, Washington, D.C. 20202-4725.

Definitions for Form ED 424

Novice Applicant (See 34 CFR 75.225). For discretionary grant programs under which the Secretary gives special consideration to novice applications, a novice applicant means any applicant for a grant from ED that—

- Has never received a grant or subgrant under the program from which it seeks funding;
- Has never been a member of a group application, submitted in accordance with 34 CFR 75.127-75.129, that received a grant under the program from which it seeks funding; and
- Has not had an active discretionary grant from the Federal government in the five years before the deadline date for applications under the program. For the purposes of this requirement, a grant is active until the end of the grant's project or funding period, including any extensions of those periods that extend the grantee's authority to obligate funds.

In the case of a group application submitted in accordance with 34 CFR 75.127-75.129, a group includes only parties that meet the requirements listed above.

Type of Submission. "Construction" includes construction of new buildings and acquisition, expansion, remodeling, and alteration of existing buildings, and initial equipment of any such buildings, or any combination of such activities (including architects' fees and the cost of acquisition of land). "Construction" also includes remodeling to meet standards, remodeling designed to conserve energy, renovation or remodeling to accommodate new technologies, and the purchase of existing historic buildings for conversion to public libraries. For the purposes of this paragraph, the term "equipment" includes machinery, utilities, and built-in equipment and any necessary enclosures or structures to house them; and such term includes all other items necessary for the functioning of a particular facility as a facility for the provision of library services.

Executive Order 12372. The purpose of Executive Order 12372 is to foster an intergovernmental partnership and strengthen federalism by relying on State and local processes for the coordination and review of proposed Federal financial assistance and direct Federal development. The application notice, as published in the Federal Register, informs the applicant as to whether the program is subject to the requirements of E.O. 12372. In addition, the application package contains information on the State Single Point of Contact. An applicant is still eligible to apply for a grant or grants even if its respective State, Territory, Commonwealth, etc. does not have a State Single Point of Contact. For additional information on E.O. 12372 go to http://www.cfda.gov/public/eo12372.htm.

PROTECTION OF HUMAN SUBJECTS IN RESEARCH

I. Definitions and Exemptions

A. Definitions.

A research activity involves human subjects if the activity is research, as defined in the Department's regulations, and the research activity will involve use of human subjects, as defined in the regulations.

—Research

The ED Regulations for the Protection of Human Subjects, Title 34, Code of Federal Regulations, Part 97, define research as "a systematic investigation, including research development, testing and evaluation, designed to develop or contribute to generalizable knowledge." If an activity follows a deliberate plan whose purpose is to develop or contribute to generalizable knowledge, it is research. Activities which meet this definition constitute research whether or not they are conducted or supported under a program which is considered research for other purposes. For example, some demonstration and service programs may include research activities.

—Human Subject

The regulations define human subject as "a living individual about whom an investigator (whether professional or student) conducting research obtains (1) data through intervention or interaction with the individual, or (2) identifiable private information." (1) If an activity involves obtaining information about a living person by manipulating that person or that person's environment, as might occur when a new instructional technique is tested, or by communicating or interacting with the individual, as occurs with surveys and interviews, the definition of human subject is met. (2) If an activity involves obtaining private information about a living person in such a way that the information can be linked to that individual (the identity of the subject is or may be readily determined by the investigator or associated with the information), the definition of human subject is met. [Private information includes information about behavior that occurs in a context in which an individual can reasonably expect that no observation or recording is taking place, and information which has been provided for specific purposes by an individual and which the individual can reasonably expect will not be made public (for example, a school health record).]

B. Exemptions.

Research activities in which the only involvement of human subjects will be in one or more of the following six categories of exemptions are not covered by the regulations:

(1) Research conducted in established or commonly accepted educational settings, involving normal educational practices, such as (a) research on regular and special education instructional strategies, or (b) research on the effectiveness of or the comparison among instructional techniques, curricula, or classroom management methods.

(2) Research involving the use of educational tests (cognitive, diagnostic, aptitude, achievement), survey procedures, interview procedures or observation of public behavior, unless: (a) information obtained is recorded in such a manner that human subjects can be identified, directly or through identifiers linked to the subjects; and (b) any disclosure of the human subjects' responses outside the research could reasonably place the subjects at risk of criminal or civil liability or be damaging to the subjects' financial standing, employability, or reputation. If the subjects are children, exemption 2 applies only to research involving educational tests and observations of public behavior when the investigator(s) do not participate in the

activities being observed. Exemption 2 does not apply if children are surveyed or interviewed or if the research involves observation of public behavior and the investigator(s) participate in the activities being observed. [Children are defined as persons who have not attained the legal age for consent to treatments or procedures involved in the research, under the applicable law or jurisdiction in which the research will be conducted.]

(3) Research involving the use of educational tests (cognitive, diagnostic, aptitude, achievement), survey procedures, interview procedures or observation of public behavior that is not exempt under section (2) above, if the human subjects are elected or appointed public officials or candidates for public office; or federal statute(s) require(s) without exception that the confidentiality of the personally identifiable information will be maintained throughout the research and thereafter.

(4) Research involving the collection or study of existing data, documents, records, pathological specimens, or diagnostic specimens, if these sources are publicly available or if the information is recorded by the investigator in a manner that subjects cannot be identified, directly or through identifiers linked to the subjects.

(5) Research and demonstration projects which are conducted by or subject to the approval of department or agency heads, and which are designed to study, evaluate, or otherwise examine: (a) public benefit or service programs; (b) procedures for obtaining benefits or services under those programs; (c) possible changes in or alternatives to those programs or procedures; or (d) possible changes in methods or levels of payment for benefits or services under those programs.

(6) Taste and food quality evaluation and consumer acceptance studies, (a) if wholesome foods without additives are consumed or (b) if a food is consumed that contains a food ingredient at or below the level and for a use found to be safe, or agricultural chemical or environmental contaminant at or below the level found to be safe, by the Food and Drug Administration or approved by the Environmental Protection Agency or the Food Safety and Inspection Service of the U.S. Department of Agriculture.

II. Instructions for Exempt and Nonexempt Human Subjects Research Narratives

If the applicant marked "Yes" for Item 12 on the ED 424, the applicant must provide a human subjects "exempt research" or "nonexempt research" narrative and insert it immediately following the ED 424 face page.

A. Exempt Research Narrative.

If you marked "Yes" for item 12a. and designated exemption numbers(s), provide the "exempt research" narrative. The narrative must contain sufficient information about the involvement of human subjects in the proposed research to allow a determination by ED that the designated exemption(s) are appropriate. The narrative must be succinct.

B. Nonexempt Research Narrative.

If you marked "No" for item 12a. you must provide the "nonexempt research" narrative. The narrative must address the following seven points. Although no specific page limitation applies to this section of the application, be succinct.

(1) Human Subjects Involvement and Characteristics: Provide a detailed description of the proposed involvement of human subjects. Describe the characteristics of the subject population, including their anticipated number, age range, and health status. Identify the criteria for inclusion or exclusion of any subpopulation. Explain the rationale for the involvement of special classes of subjects, such as children, children with disabilities, adults with disabilities, persons with mental disabilities, pregnant women, prisoners, institutionalized individuals, or others who are likely to be vulnerable

(2) Sources of Materials: Identify the sources of research material obtained from individually identifiable living human subjects in the form of specimens, records, or data. Indicate whether the material or data will be obtained specifically for research purposes or whether use will be made of existing specimens, records, or data.

(3) Recruitment and Informed Consent: Describe plans for the recruitment of subjects and the consent procedures to be followed. Include the circumstances under which consent will be sought and obtained, who will seek it, the nature of the information to be provided to prospective subjects, and the method of documenting consent. State if the Institutional Review Board (IRB) has authorized a modification or waiver of the elements of consent or the requirement for documentation of consent.

(4) Potential Risks: Describe potential risks (physical, psychological, social, legal, or other) and assess their likelihood and seriousness. Where appropriate, describe alternative treatments and procedures that might be advantageous to the subjects.

(5) Protection Against Risk: Describe the procedures for protecting against or minimizing potential risks, including risks to confidentiality, and assess their likely effectiveness. Where appropriate, discuss provisions for ensuring necessary medical or professional intervention in the event of adverse effects to the subjects. Also, where appropriate, describe the provisions for monitoring the data collected to ensure the safety of the subjects.

(6) Importance of the Knowledge to be Gained: Discuss the importance of the knowledge gained or to be gained as a result of the proposed research. Discuss why the risks to subjects are reasonable in relation to the anticipated benefits to subjects and in relation to the importance of the knowledge that may reasonably be expected to result.

(7) Collaborating Site(s): If research involving human subjects will take place at collaborating site(s) or other performance site(s), name the sites and briefly describe their involvement or role in the research.

Copies of the Department of Education's Regulations for the Protection of Human Subjects, 34 CFR Part 97 and other pertinent materials on the protection of human subjects in research are available from the Grants Policy and Oversight Staff, Office of the Chief Financial Officer, U.S. Department of Education, Washington, D.C. 20202-4248, telephone: (202) 708-8263, and on the U.S. Department of Education's Protection of Human Subjects in Research Web Site at http://www.ed.gov/offices/OCFO/humansub.html

U.S. DEPARTMENT OF EDUCATION

BUDGET INFORMATION

NON-CONSTRUCTION PROGRAMS

OMB Control Number: 1890-0004

Expiration Date: 10/31/03

Name of Institution/Organization

Applicants requesting funding for only one year should complete the column under "Project Year 1." Applicants requesting funding for multi-year grants should complete all applicable columns. Please read all instructions before completing form.

SECTION A - BUDGET SUMMARY
U.S. DEPARTMENT OF EDUCATION FUNDS

Budget Categories	Project Year 1 (a)	Project Year 2 (b)	Project Year 3 (c)	Project Year 4 (d)	Project Year 5 (e)	Total (f)
1. Personnel						
2. Fringe Benefits						
3. Travel						
4. Equipment						
5. Supplies						
6. Contractual						
7. Construction						
8. Other						
9. Total Direct Costs (lines 1-8)						
10. Indirect Costs						
11. Training Stipends						
12. Total Costs (lines 9-11)						

ED Form No. 524

Name of Institution/Organization	Applicants requesting funding for only one year should complete the column under "Project Year 1." Applicants requesting funding for multi-year grants should complete all applicable columns. Please read all instructions before completing form.

SECTION B - BUDGET SUMMARY
NON-FEDERAL FUNDS

Budget Categories	Project Year 1 (a)	Project Year 2 (b)	Project Year 3 (c)	Project Year 4 (d)	Project Year 5 (e)	Total (f)
1. Personnel						
2. Fringe Benefits						
3. Travel						
4. Equipment						
5. Supplies						
6. Contractual						
7. Construction						
8. Other						
9. Total Direct Costs (lines 1-8)						
10. Indirect Costs						
11. Training Stipends						
12. Total Costs (lines 9-11)						

SECTION C - OTHER BUDGET INFORMATION (see instructions)

ED Form No. 524

Public reporting burden for this collection of information is estimated to vary from 13 to 22 hours per response, with an average of 17.5 hours per response, including the time reviewing instructions, searching existing data sources, gathering and maintaining the data needed, and completing and reviewing the collection of information. Send comments regarding this burden estimate or any other aspect of this collection of information, including suggestions for reducing this burden, to the U.S. Department of Education, Information Management and Compliance Division, Washington, D.C. 20202-4651; and the Office of Management and Budget, Paperwork Reduction Project 1875-0102, Washington DC 20503.

INSTRUCTIONS FOR ED FORM 524

General Instructions

This form is used to apply to individual U.S. Department of Education discretionary grant programs. Unless directed otherwise, provide the same budget information for each year of the multi-year funding request. Pay attention to applicable program specific instructions, if attached.

Section A - Budget Summary
U.S. Department of Education Funds

All applicants must complete Section A and provide a breakdown by the applicable budget categories shown in lines 1-11.

Lines 1-11, columns (a)-(e): For each project year for which funding is requested, show the total amount requested for each applicable budget category.

Lines 1-11, column (f): Show the multi-year total for each budget category. If funding is requested for only one project year, leave this column blank.

Line 12, columns (a)-(e): Show the total budget request for each project year for which funding is requested.

Line 12, column (f): Show the total amount requested for all project years. If funding is requested for only one year, leave this space blank.

Section B - Budget Summary
Non-Federal Funds

If you are required to provide or volunteer to provide matching funds or other non-Federal resources to the project, these should be shown for each applicable budget category on lines 1-11 of Section B.

Lines 1-11, columns (a)-(e): For each project year for which matching funds or other contributions are provided, show the total contribution for each applicable budget category.

Lines 1-11, column (f): Show the multi-year total for each budget category. If non-Federal contributions are provided for only one year, leave this column blank.

Line 12, columns (a)-(e): Show the total matching or other contribution for each project year.

Line 12, column (f): Show the total amount to be contributed for all years of the multi-year project. If non-Federal contributions are provided for only one year, leave this space blank.

Section C - Other Budget Information
Pay attention to applicable program specific instructions, if attached.

1. Provide an itemized budget breakdown, by project year, for each budget category listed in Sections A and B.

2. If applicable to this program, enter the type of indirect rate (provisional, predetermined, final or fixed) that will be in effect during the funding period. In addition, enter the estimated amount of the base to which the rate is applied, and the total indirect expense.

3. If applicable to this program, provide the rate and base on which fringe benefits are calculated.

4. Provide other explanations or comments you deem necessary.

OMB Approval No. 0348-0040

ASSURANCES - NON-CONSTRUCTION PROGRAMS

Public reporting burden for this collection of information is estimated to average 15 minutes per response, including time for reviewing instructions, searching existing data sources, gathering and maintaining the data needed, and completing and reviewing the collection of information. Send comments regarding the burden estimate or any other aspect of this collection of information, including suggestions for reducing this burden, to the Office of Management and Budget, Paperwork Reduction Project (0348-0040), Washington, DC 20503.

PLEASE DO NOT RETURN YOUR COMPLETED FORM TO THE OFFICE OF MANAGEMENT AND BUDGET. SEND IT TO THE ADDRESS PROVIDED BY THE SPONSORING AGENCY.

NOTE: Certain of these assurances may not be applicable to your project or program. If you have questions, please contact the awarding agency. Further, certain Federal awarding agencies may require applicants to certify to additional assurances. If such is the case, you will be notified.

As the duly authorized representative of the applicant, I certify that the applicant:

1. Has the legal authority to apply for Federal assistance and the institutional, managerial and financial capability (including funds sufficient to pay the non-Federal share of project cost) to ensure proper planning, management and completion of the project described in this application.

2. Will give the awarding agency, the Comptroller General of the United States and, if appropriate, the State, through any authorized representative, access to and the right to examine all records, books, papers, or documents related to the award; and will establish a proper accounting system in accordance with generally accepted accounting standards or agency directives.

3. Will establish safeguards to prohibit employees from using their positions for a purpose that constitutes or presents the appearance of personal or organizational conflict of interest, or personal gain.

4. Will initiate and complete the work within the applicable time frame after receipt of approval of the awarding agency.

5. Will comply with the Intergovernmental Personnel Act of 1970 (42 U.S.C. §§4728-4763) relating to prescribed standards for merit systems for programs funded under one of the 19 statutes or regulations specified in Appendix A of OPM's Standards for a Merit System of Personnel Administration (5 C.F.R. 900, Subpart F).

6. Will comply with all Federal statutes relating to nondiscrimination. These include but are not limited to: (a) Title VI of the Civil Rights Act of 1964 (P.L. 88-352) which prohibits discrimination on the basis of race, color or national origin; (b) Title IX of the Education Amendments of 1972, as amended (20 U.S.C. §§1681-1683, and 1685-1686), which prohibits discrimination on the basis of sex; (c) Section 504 of the Rehabilitation Act of 1973, as amended (29 U.S.C. §794), which prohibits discrimination on the basis of handicaps; (d) the Age Discrimination Act of 1975, as amended (42 U.S.C. §§6101-6107), which prohibits discrimination on the basis of age; (e) the Drug Abuse Office and Treatment Act of 1972 (P.L. 92-255), as amended, relating to nondiscrimination on the basis of drug abuse; (f) the Comprehensive Alcohol Abuse and Alcoholism Prevention, Treatment and Rehabilitation Act of 1970 (P.L. 91-616), as amended, relating to nondiscrimination on the basis of alcohol abuse or alcoholism; (g) §§523 and 527 of the Public Health Service Act of 1912 (42 U.S.C. §§290 dd-3 and 290 ee 3), as amended, relating to confidentiality of alcohol and drug abuse patient records; (h) Title VIII of the Civil Rights Act of 1968 (42 U.S.C. §§3601 et seq.), as amended, relating to nondiscrimination in the sale, rental or financing of housing; (i) any other nondiscrimination provisions in the specific statute(s) under which application for Federal assistance is being made; and, (j) the requirements of any other nondiscrimination statute(s) which may apply to the application.

7. Will comply, or has already complied, with the requirements of Titles II and III of the Uniform Relocation Assistance and Real Property Acquisition Policies Act of 1970 (P.L. 91-646) which provide for fair and equitable treatment of persons displaced or whose property is acquired as a result of Federal or federally-assisted programs. These requirements apply to all interests in real property acquired for project purposes regardless of Federal participation in purchases.

8. Will comply, as applicable, with provisions of the Hatch Act (5 U.S.C. §§1501-1508 and 7324-7328) which limit the political activities of employees whose principal employment activities are funded in whole or in part with Federal funds.

9. Will comply, as applicable, with the provisions of the Davis-Bacon Act (40 U.S.C. §§276a to 276a-7), the Copeland Act (40 U.S.C. §276c and 18 U.S.C. §874), and the Contract Work Hours and Safety Standards Act (40 U.S.C. §§327-333), regarding labor standards for federally-assisted construction subagreements.

10. Will comply, if applicable, with flood insurance purchase requirements of Section 102(a) of the Flood Disaster Protection Act of 1973 (P.L. 93-234) which requires recipients in a special flood hazard area to participate in the program and to purchase flood insurance if the total cost of insurable construction and acquisition is $10,000 or more.

11. Will comply with environmental standards which may be prescribed pursuant to the following: (a) institution of environmental quality control measures under the National Environmental Policy Act of 1969 (P.L. 91-190) and Executive Order (EO) 11514; (b) notification of violating facilities pursuant to EO 11738; (c) protection of wetlands pursuant to EO 11990; (d) evaluation of flood hazards in floodplains in accordance with EO 11988; (e) assurance of project consistency with the approved State management program developed under the Coastal Zone Management Act of 1972 (16 U.S.C. §§1451 et seq.); (f) conformity of Federal actions to State (Clean Air) Implementation Plans under Section 176(c) of the Clean Air Act of 1955, as amended (42 U.S.C. §§7401 et seq.); (g) protection of underground sources of drinking water under the Safe Drinking Water Act of 1974, as amended (P.L. 93-523); and, (h) protection of endangered species under the Endangered Species Act of 1973, as amended (P.L. 93-205).

12. Will comply with the Wild and Scenic Rivers Act of 1968 (16 U.S.C. §§1271 et seq.) related to protecting components or potential components of the national wild and scenic rivers system.

13. Will assist the awarding agency in assuring compliance with Section 106 of the National Historic Preservation Act of 1966, as amended (16 U.S.C. §470), EO 11593 (identification and protection of historic properties), and the Archaeological and Historic Preservation Act of 1974 (16 U.S.C. §§469a-1 et seq.).

14. Will comply with P.L. 93-348 regarding the protection of human subjects involved in research, development, and related activities supported by this award of assistance.

15. Will comply with the Laboratory Animal Welfare Act of 1966 (P.L. 89-544, as amended, 7 U.S.C. §§2131 et seq.) pertaining to the care, handling, and treatment of warm blooded animals held for research, teaching, or other activities supported by this award of assistance.

16. Will comply with the Lead-Based Paint Poisoning Prevention Act (42 U.S.C. §§4801 et seq.) which prohibits the use of lead-based paint in construction or rehabilitation of residence structures.

17. Will cause to be performed the required financial and compliance audits in accordance with the Single Audit Act Amendments of 1996 and OMB Circular No. A-133, "Audits of States, Local Governments, and Non-Profit Organizations."

18. Will comply with all applicable requirements of all other Federal laws, executive orders, regulations, and policies governing this program.

SIGNATURE OF AUTHORIZED CERTIFYING OFFICIAL	TITLE
APPLICANT ORGANIZATION	DATE SUBMITTED

Standard Form 424B (Rev. 7-97) Back

CERTIFICATIONS REGARDING LOBBYING; DEBARMENT, SUSPENSION AND OTHER RESPONSIBILITY MATTERS; AND DRUG-FREE WORKPLACE REQUIREMENTS

Applicants should refer to the regulations cited below to determine the certification to which they are required to attest. Applicants should also review the instructions for certification included in the regulations before completing this form. Signature of this form provides for compliance with certification requirements under 34 CFR Part 82, "New Restrictions on Lobbying," and 34 CFR Part 85, "Government-wide Debarment and Suspension (Nonprocurement) and Government-wide Requirements for Drug-Free Workplace (Grants)." The certifications shall be treated as a material representation of fact upon which reliance will be placed when the Department of Education determines to award the covered transaction, grant, or cooperative agreement.

1. LOBBYING

As required by Section 1352, Title 31 of the U.S. Code, and implemented at 34 CFR Part 82, for persons entering into a grant or cooperative agreement over $100,000, as defined at 34 CFR Part 82, Sections 82.105 and 82.110, the applicant certifies that:

(a) No Federal appropriated funds have been paid or will be paid, by or on behalf of the undersigned, to any person for influencing or attempting to influence an officer or employee of any agency, a Member of Congress, an officer or employee of Congress, or an employee of a Member of Congress in connection with the making of any Federal grant, the entering into of any cooperative agreement, and the extension, continuation, renewal, amendment, or modification of any Federal grant or cooperative agreement;

(b) If any funds other than Federal appropriated funds have been paid or will be paid to any person for influencing or attempting to influence an officer or employee of any agency, a Member of Congress, an officer or employee of Congress, or an employee of a Member of Congress in connection with this Federal grant or cooperative agreement, the undersigned shall complete and submit Standard Form - LLL, "Disclosure Form to Report Lobbying," in accordance with its instructions;

(c) The undersigned shall require that the language of this certification be included in the award documents for all subawards at all tiers (including subgrants, contracts under grants and cooperative agreements, and subcontracts) and that all subrecipients shall certify and disclose accordingly.

2. DEBARMENT, SUSPENSION, AND OTHER RESPONSIBILITY MATTERS

As required by Executive Order 12549, Debarment and Suspension, and implemented at 34 CFR Part 85, for prospective participants in primary covered transactions, as defined at 34 CFR Part 85, Sections 85.105 and 85.110—

A. The applicant certifies that it and its principals:

(a) Are not presently debarred, suspended, proposed for debarment, declared ineligible, or voluntarily excluded from covered transactions by any Federal department or agency;

(b) Have not within a three-year period preceding this application been convicted of or had a civil judgement rendered against them for commission of fraud or a criminal offense in connection with obtaining, attempting to obtain, or performing a public (Federal, State, or local) transaction or contract under a public transaction; violation of Federal or State antitrust statutes or commission of embezzlement, theft, forgery, bribery, falsification or destruction of records, making false statements, or receiving stolen property;

(c) Are not presently indicted for or otherwise criminally or civilly charged by a governmental entity (Federal, State, or local) with commission of any of the offenses enumerated in paragraph (2)(b) of this certification; and

(d) Have not within a three-year period preceding this application had one or more public transaction (Federal, State, or local) terminated for cause or default; and

B. Where the applicant is unable to certify to any of the statements in this certification, he or she shall attach an explanation to this application.

3. DRUG-FREE WORKPLACE (GRANTEES OTHER THAN INDIVIDUALS)

As required by the Drug-Free Workplace Act of 1988, and implemented at 34 CFR Part 85, Subpart F, for grantees, as defined at 34 CFR Part 85, Sections 85.605 and 85.610 -

A. The applicant certifies that it will or will continue to provide a drug-free workplace by:

(a) Publishing a statement notifying employees that the unlawful manufacture, distribution, dispensing, possession, or use of a controlled substance is prohibited in the grantee's workplace and specifying the actions that will be taken against employees for violation of such prohibition;

(b) Establishing an on-going drug-free awareness program to inform employees about:

(1) The dangers of drug abuse in the workplace;

(2) The grantee's policy of maintaining a drug-free workplace;

(3) Any available drug counseling, rehabilitation, and employee assistance programs; and

(4) The penalties that may be imposed upon employees for drug abuse violations occurring in the workplace;

(c) Making it a requirement that each employee to be engaged in the performance of the grant be given a copy of the statement required by paragraph (a);

(d) Notifying the employee in the statement required by paragraph (a) that, as a condition of employment under the grant, the employee will:

(1) Abide by the terms of the statement; and

(2) Notify the employer in writing of his or her conviction for a violation of a criminal drug statute occurring in the workplace no later than five calendar days after such conviction;

(e) Notifying the agency, in writing, within 10 calendar days after receiving notice under subparagraph (d)(2) from an employee or otherwise receiving actual notice of such conviction. Employers of convicted employees must provide notice, including position title, to: Director, Grants Policy and Oversight Staff, U.S. Department of Education, 400 Maryland Avenue, S.W. (Room 3652, GSA Regional Office Building No. 3), Washington, DC 20202-4248. Notice shall include the identification number(s) of each affected grant;

(f) Taking one of the following actions, within 30 calendar days of receiving notice under subparagraph (d)(2), with respect to any employee who is so convicted:

(1) Taking appropriate personnel action against such an employee, up to and including termination, consistent with the requirements of the Rehabilitation Act of 1973, as amended; or

(2) Requiring such employee to participate satisfactorily in a drug abuse assistance or rehabilitation program approved for such purposes by a Federal, State, or local health, law enforcement, or other appropriate agency;

(g) Making a good faith effort to continue to maintain a drug-free workplace through implementation of paragraphs (a), (b), (c), (d), (e), and (f).

B. The grantee may insert in the space provided below the site(s) for the performance of work done in connection with the specific grant:

Place of Performance (Street address. city, county, state, zip code)

_____

_____

_____

Check [ ] if there are workplaces on file that are not identified here.

DRUG-FREE WORKPLACE (GRANTEES WHO ARE INDIVIDUALS)

As required by the Drug-Free Workplace Act of 1988, and implemented at 34 CFR Part 85, Subpart F, for grantees, as defined at 34 CFR Part 85, Sections 85.605 and 85.610-

A. As a condition of the grant, I certify that I will not engage in the unlawful manufacture, distribution, dispensing, possession, or use of a controlled substance in conducting any activity with the grant; and

B. If convicted of a criminal drug offense resulting from a violation occurring during the conduct of any grant activity, I will report the conviction, in writing, within 10 calendar days of the conviction, to: Director, Grants Policy and Oversight Staff, Department of Education, 400 Maryland Avenue, S.W. (Room 3652, GSA Regional Office Building No. 3), Washington, DC 20202-4248. Notice shall include the identification number(s) of each affected grant.

As the duly authorized representative of the applicant, I hereby certify that the applicant will comply with the above certifications.

NAME OF APPLICANT	PR/AWARD NUMBER AND / OR PROJECT NAME
PRINTED NAME AND TITLE OF AUTHORIZED REPRESENTATIVE	
SIGNATURE	DATE

Certification Regarding Debarment, Suspension, Ineligibility and Voluntary Exclusion — Lower Tier Covered Transactions

This certification is required by the Department of Education regulations implementing Executive Order 12549, Debarment and Suspension, 34 CFR Part 85, for all lower tier transactions meeting the threshold and tier requirements stated at Section 85.110.

Instructions for Certification

1. By signing and submitting this proposal, the prospective lower tier participant is providing the certification set out below.

2. The certification in this clause is a material representation of fact upon which reliance was placed when this transaction was entered into. If it is later determined that the prospective lower tier participant knowingly rendered an erroneous certification, in addition to other remedies available to the Federal Government, the department or agency with which this transaction originated may pursue available remedies, including suspension and/or debarment.

3. The prospective lower tier participant shall provide immediate written notice to the person to which this proposal is submitted if at any time the prospective lower tier participant learns that its certification was erroneous when submitted or has become erroneous by reason of changed circumstances.

4. The terms "covered transaction," "debarred," "suspended," "ineligible," "lower tier covered transaction," "participant," " person," "primary covered transaction," " principal," "proposal," and "voluntarily excluded," as used in this clause, have the meanings set out in the Definitions and Coverage sections of rules implementing Executive Order 12549. You may contact the person to which this proposal is submitted for assistance in obtaining a copy of those regulations.

5. The prospective lower tier participant agrees by submitting this proposal that, should the proposed covered transaction be entered into, it shall not knowingly enter into any lower tier covered transaction with a person who is debarred, suspended, declared ineligible, or voluntarily excluded from participation in this covered transaction, unless authorized by the department or agency with which this transaction originated.

6. The prospective lower tier participant further agrees by submitting this proposal that it will include the clause titled "Certification Regarding Debarment, Suspension, Ineligibility, and Voluntary Exclusion-Lower Tier Covered Transactions," without modification, in all lower tier covered transactions and in all solicitations for lower tier covered transactions.

7. A participant in a covered transaction may rely upon a certification of a prospective participant in a lower tier covered transaction that it is not debarred, suspended, ineligible, or voluntarily excluded from the covered transaction, unless it knows that the certification is erroneous. A participant may decide the method and frequency by which it determines the eligibility of its principals. Each participant may but is not required to, check the Nonprocurement List.

8. Nothing contained in the foregoing shall be construed to require establishment of a system of records in order to render in good faith the certification required by this clause. The knowledge and information of a participant is not required to exceed that which is normally possessed by a prudent person in the ordinary course of business dealings.

9. Except for transactions authorized under paragraph 5 of these instructions, if a participant in a covered transaction knowingly enters into a lower tier covered transaction with a person who is suspended, debarred, ineligible, or voluntarily excluded from participation in this transaction, in addition to other remedies available to the Federal Government, the department or agency with which this transaction originated may pursue available remedies, including suspension and/or debarment.

Certification

(1) The prospective lower tier participant certifies, by submission of this proposal, that neither it nor its principals are presently debarred, suspended, proposed for debarment, declared ineligible, or voluntarily excluded from participation in this transaction by any Federal department or agency.

(2) Where the prospective lower tier participant is unable to certify to any of the statements in this certification, such prospective participant shall attach an explanation to this proposal.

NAME OF APPLICANT	PR/AWARD NUMBER AND/OR PROJECT NAME
PRINTED NAME AND TITLE OF AUTHORIZED REPRESENTATIVE	
SIGNATURE	DATE

ED 80-0014, 9/90 (Replaces GCS-009 (REV.12/88), which is obsolete)

Certification of Eligibility for Federal Assistance in Certain Programs

I understand that 34 CFR 75.60, 75.61, and 75.62 require that I make specific certifications of eligibility to the U.S. Department of Education (ED) as a condition of applying for Federal funds in certain programs and that these requirements are in addition to any other eligibility requirements that ED imposes under program regulations. Under 34 CFR 75.60 – 75.62:

I. I certify that:

A. I do not owe a debt, or I am current in repaying a debt, or I am not in default (as that term is used at 34 CFR Part 668) on a debt:

1. To the Federal Government under a nonprocurement transaction (e.g., a previous loan, scholarship, grant, or cooperative agreement); or

2. For a fellowship, scholarship, stipend, discretionary grant, or loan in any program of ED that is subject to 34 CFR 75.60, 75.61, and 75.62, including:

- Federal Pell Grant Program (20 U.S.C. 1070a, et seq.);
- Federal Supplemental Educational Opportunity Grant (SEOG) Program (20 U.S.C. 1070(b), et seq.):
- State Student Incentive Grant Program (SSIG) 20 U.S.C. 1070c, et seq.);
- Federal Perkins Loan Program (20 U.S.C. 1087aa, et seq.);
- Income Contingent Direct Loan Demonstration Project (20 U.S.C. 1087a, note);
- Federal Stafford Loan Program, Federal Supplemental Loans for Students [SLS], Federal PLUS, or Federal Consolidation Loan Program (20 U.S.C. 1071, et seq.);
- William D. Ford Federal Direct Loan Program (20 U.S.C. 1087a, et. seq.);
- Cuban Student Loan Program (20 U.S.C. 2601, et seq.);
- Robert C. Byrd Honors Scholarship Program (20 U.S.C. 1070d-31, et seq.);
- Jacob K. Javits Fellows Program (20 U.S.C. 1134h-1134l);
- Patricia Roberts Harris Fellowship Program (20 U.S.C. 1134d-1134g);
- Christa McAuliffe Fellowship Program (20 U.S.C. 1105-1105i);
- Bilingual Education Fellowship Program (20 U.S.C. 3221-3262);
- Rehabilitation Long-Term Training Program (29 U.S.C. 774(b));
- Paul Douglas Teacher Scholarship Program (20 U.S.C. 1104, et seq.);
- Law Enforcement Education Program (42 U.S.C. 3775);
- Indian Fellowship Program (29 U.S.C. 774(b));
- Teacher Quality Enhancement Grants Program (20 U.S.C. 1021, et seq.);

OR

B. I have made arrangements satisfactory to ED to repay a debt as described in A.1. or A.2. (above) on which I had not been current in repaying or on which I was in default (as that term is used in 34 CFR Part 668).

II. I certify also that I have not been declared by a judge, as a condition of sentencing under section 5301 of the Anti-Drug Abuse Act of 1988 (21 U.S.C. 862), ineligible to receive Federal assistance for the period of this requested funding.

I understand that providing a false certification to any of the statements above makes me liable for repayment to ED for funds received on the basis of this certification, for civil penalties, and for criminal prosecution under 18 U.S.C. 1001.

_____ (Signature)

_____ (Date)

_____ (Typed or Printed Name)

Name or number of ED program under which this certification is being made: _____

ED 80-0016 (Revised 2/01)

DISCLOSURE OF LOBBYING ACTIVITIES

Approved by OMB 0348-0046

Complete this form to disclose lobbying activities pursuant to 31 U.S.C. 1352
(See reverse for public burden disclosure.)

1. Type of Federal Action:	2. Status of Federal Action:	3. Report Type:
☐ a. contract b. grant c. cooperative agreement d. loan e. loan guarantee f. loan insurance	☐ a. bid/offer/application b. initial award c. post-award	☐ a. initial filing b. material change **For Material Change Only:** year _____ quarter _____ date of last report _____

4. Name and Address of Reporting Entity:	5. If Reporting Entity in No. 4 is a Subawardee, Enter Name and Address of Prime:
☐ Prime ☐ Subawardee Tier _____, *if known*: **Congressional District**, *if known*:	 **Congressional District**, *if known*:
6. Federal Department/Agency:	**7. Federal Program Name/Description:** CFDA Number, *if applicable*: _____
8. Federal Action Number, *if known*:	**9. Award Amount**, *if known*: $
10. a. Name and Address of Lobbying Registrant (*if individual, last name, first name, MI*):	**b. Individuals Performing Services** (*including address if different from No. 10a*) (*last name, first name, MI*):
11. Information requested through this form is authorized by title 31 U.S.C. section 1352. This disclosure of lobbying activities is a material representation of fact upon which reliance was placed by the tier above when this transaction was made or entered into. This disclosure is required pursuant to 31 U.S.C. 1352. This information will be reported to the Congress semi-annually and will be available for public inspection. Any person who fails to file the required disclosure shall be subject to a civil penalty of not less that $10,000 and not more than $100,000 for each such failure.	Signature: _____ Print Name: _____ Title: _____ Telephone No.: _____ Date: _____
Federal Use Only:	Authorized for Local Reproduction Standard Form LLL (Rev. 7-97)

INSTRUCTIONS FOR COMPLETION OF SF-LLL, DISCLOSURE OF LOBBYING ACTIVITIES

This disclosure form shall be completed by the reporting entity, whether subawardee or prime Federal recipient, at the initiation or receipt of a covered Federal action, or a material change to a previous filing, pursuant to title 31 U.S.C. section 1352. The filing of a form is required for each payment or agreement to make payment to any lobbying entity for influencing or attempting to influence an officer or employee of any agency, a Member of Congress, an officer or employee of Congress, or an employee of a Member of Congress in connection with a covered Federal action. Complete all items that apply for both the initial filing and material change report. Refer to the implementing guidance published by the Office of Management and Budget for additional information.

1. Identify the type of covered Federal action for which lobbying activity is and/or has been secured to influence the outcome of a covered Federal action.

2. Identify the status of the covered Federal action.

3. Identify the appropriate classification of this report. If this is a followup report caused by a material change to the information previously reported, enter the year and quarter in which the change occurred. Enter the date of the last previously submitted report by this reporting entity for this covered Federal action.

4. Enter the full name, address, city, State and zip code of the reporting entity. Include Congressional District, if known. Check the appropriate classification of the reporting entity that designates if it is, or expects to be, a prime or subaward recipient. Identify the tier of the subawardee, e.g., the first subawardee of the prime is the 1st tier. Subawards include but are not limited to subcontracts, subgrants and contract awards under grants.

5. If the organization filing the report in item 4 checks "Subawardee," then enter the full name, address, city, State and zip code of the prime Federal recipient. Include Congressional District, if known.

6. Enter the name of the Federal agency making the award or loan commitment. Include at least one organizational level below agency name, if known. For example, Department of Transportation, United States Coast Guard.

7. Enter the Federal program name or description for the covered Federal action (item 1). If known, enter the full Catalog of Federal Domestic Assistance (CFDA) number for grants, cooperative agreements, loans, and loan commitments.

8. Enter the most appropriate Federal identifying number available for the Federal action identified in item 1 (e.g., Request for Proposal (RFP) number; Invitation for Bid (IFB) number; grant announcement number; the contract, grant, or loan award number; the application/proposal control number assigned by the Federal agency). Include prefixes, e.g., "RFP-DE-90-001."

9. For a covered Federal action where there has been an award or loan commitment by the Federal agency, enter the Federal amount of the award/loan commitment for the prime entity identified in item 4 or 5.

10. (a) Enter the full name, address, city, State and zip code of the lobbying registrant under the Lobbying Disclosure Act of 1995 engaged by the reporting entity identified in item 4 to influence the covered Federal action.

    (b) Enter the full names of the individual(s) performing services, and include full address if different from 10 (a). Enter Last Name, First Name, and Middle Initial (MI).

11. The certifying official shall sign and date the form, print his/her name, title, and telephone number.

According to the Paperwork Reduction Act, as amended, no persons are required to respond to a collection of information unless it displays a valid OMB Control Number. The valid OMB control number for this information collection is OMB No. 0348-0046. Public reporting burden for this collection of information is estimated to average 10 minutes per response, including time for reviewing instructions, searching existing data sources, gathering and maintaining the data needed, and completing and reviewing the collection of information. Send comments regarding the burden estimate or any other aspect of this collection of information, including suggestions for reducing this burden, to the Office of Management and Budget, Paperwork Reduction Project (0348-0046), Washington, DC 20503.

SURVEY ON ENSURING EQUAL OPPORTUNITY FOR APPLICANTS

Do not enter information below unless instructed to do so.

OMB No. 1890-0014 Exp. 1/31/2006

Purpose: This form is for applicants that are nonprofit private organizations (not including private universities). Please complete it to assist the Federal government in ensuring that all qualified applicants, small or large, non-religious or faith-based, have an equal opportunity to compete for Federal funding. Information provided on this form will not be considered in any way in making funding decisions and will not be included in the Federal grants database.

Instructions for Submitting Survey

If submitting hard copy, please place the completed survey in an envelope labeled "Applicant Survey." Seal the envelope and include it with your application package.

If submitting electronically, please include the PR Award Number assigned to your e-application in the box above entitled "***Do not enter information below unless instructed to do so.***" Place and seal the completed survey in an envelope and mail it to: Joyce I. Mays, Application Control Center, U.S. Department of Education, 7th and D Streets, SW, ROB-3, Room 3671, Washington, DC 20202-4725.

1. Does the applicant have 501(c)(3) status?

   ☐ Yes ☐ No

2. How many full-time equivalent employees does the applicant have? *(Check only one box).*

   ☐ 3 or Fewer ☐ 15-50
   ☐ 4-5 ☐ 51-100
   ☐ 6-14 ☐ over 100

3. What is the size of the applicant's annual budget? *(Check only one box.)*

   ☐ Less Than $150,000
   ☐ $150,000 - $299,999
   ☐ $300,000 - $499,999
   ☐ $500,000 - $999,999
   ☐ $1,000,000 - $4,999,999
   ☐ $5,000,000 or more

4. Is the applicant a faith-based/religious organization?

   ☐ Yes ☐ No

5. Is the applicant a non-religious community-based organization?

   ☐ Yes ☐ No

6. Is the applicant an intermediary that will manage the grant on behalf of other organizations?

   ☐ Yes ☐ No

7. Has the applicant ever received a government grant or contract (Federal, State, or local)?

   ☐ Yes ☐ No

8. Is the applicant a local affiliate of a national organization?

   ☐ Yes ☐ No

Survey Instructions on Ensuring Equal Opportunity for Applicants

1. 501(c)(3) status is a legal designation provided on application to the Internal Revenue Service by eligible organizations. Some grant programs may require nonprofit applicants to have 501(c)(3) status. Other grant programs do not.

2. For example, two part-time employees who each work half-time equal one full-time equivalent employee. If the applicant is a local affiliate of a national organization, the responses to survey questions 2 and 3 should reflect the staff and budget size of the local affiliate.

3. Annual budget means the amount of money your organization spends each year on all of its activities.

4. Self-identify.

5. An organization is considered a community-based organization if its headquarters/service location shares the same zip code as the clients you serve.

6. An "intermediary" is an organization that enables a group of small organizations to receive and manage government funds by administering the grant on their behalf.

7. Self-explanatory.

8. Self-explanatory

Paperwork Burden Statement

According to the Paperwork Reduction Act of 1995, no persons are required to respond to a collection of information unless such collection displays a valid OMB control number. The valid OMB control number for this information collection is 1890-0014. The time required to complete this information collection is estimated to average five (5) minutes per response, including the time to review instructions, search existing data resources, gather the data needed, and complete and review the information collection. **If you have any comments concerning the accuracy of the time estimate(s) or suggestions for improving this form, please write to:** U.S. Department of Education, Washington, D.C. 20202-4651. **If you have comments or concerns regarding the status of your individual submission of this form, write directly to:** Joyce I. Mays, Application Control Center, U.S. Department of Education, 7th and D Streets, SW, ROB-3, Room 3671, Washington, DC 20202-4725.

[FR Doc. 03–12119 Filed 5–14–03; 8:45 am]
BILLING CODE 4000–01–C

Reader Aids

Federal Register

Vol. 68, No. 94

Thursday May 15, 2003

CUSTOMER SERVICE AND INFORMATION

Federal Register/Code of Federal Regulations	
General Information, indexes and other finding aids	**202–741–6000**
Laws	**741–6000**
Presidential Documents	
Executive orders and proclamations	**741–6000**
The United States Government Manual	**741–6000**
Other Services	
Electronic and on-line services (voice)	**741–6020**
Privacy Act Compilation	**741–6064**
Public Laws Update Service (numbers, dates, etc.)	**741–6043**
TTY for the deaf-and-hard-of-hearing	**741–6086**

ELECTRONIC RESEARCH

World Wide Web

Full text of the daily Federal Register, CFR and other publications is located at: **http://www.access.gpo.gov/nara**

Federal Register information and research tools, including Public Inspection List, indexes, and links to GPO Access are located at: **http://www.archives.gov/federal_register/**

E-mail

FEDREGTOC-L (Federal Register Table of Contents LISTSERV) is an open e-mail service that provides subscribers with a digital form of the Federal Register Table of Contents. The digital form of the Federal Register Table of Contents includes HTML and PDF links to the full text of each document.

To join or leave, go to **http://listserv.access.gpo.gov** and select *Online mailing list archives, FEDREGTOC-L, Join or leave the list (or change settings);* then follow the instructions.

PENS (Public Law Electronic Notification Service) is an e-mail service that notifies subscribers of recently enacted laws.

To subscribe, go to **http://listserv.gsa.gov/archives/publaws-l.html** and select *Join or leave the list* (or change settings); then follow the instructions.

FEDREGTOC-L and **PENS** are mailing lists only. We cannot respond to specific inquiries.

Reference questions. Send questions and comments about the Federal Register system to: **info@fedreg.nara.gov**

The Federal Register staff cannot interpret specific documents or regulations.

FEDERAL REGISTER PAGES AND DATE, MAY

23183–23376 1
23377–23568 2
23569–23884 5
23885–24332 6
24333–24604 7
24605–24858 8
24859–25278 9
25279–25478 12
25479–25808 13
25809–26200 14
26201–26456 15

CFR PARTS AFFECTED DURING MAY

At the end of each month, the Office of the Federal Register publishes separately a List of CFR Sections Affected (LSA), which lists parts and sections affected by documents published since the revision date of each title.

3 CFR

Proclamations:
7668 23821
7669 23823
7670 23825
7671 23827
7672 23829
7673 24333
7674 25277
7675 26195
7676 26197
7677 26199

Executive Orders:
12865 (Revoked by 13298) 24857
13069 (Revoked by 13298) 24857
13098 (Revoked by 13298) 24857
13298 24857
13299 25477
13300 25807

Administrative Orders:
Memorandums:
Memorandum of May 6, 2003 25275
Presidential Determinations:
No. 2003-22 of May 6, 2003 25809

5 CFR

213 24605
Ch. XIV 23885
2424 23885
2429 23885
2471 23885
2472 23885

Proposed Rules:
2601 23876

7 CFR

6 25479
29 25484
46 23377
56 25484
301 .....24605, 24613
868 24589
932 23378
985 .....23569, 25486
989 25279
1410 24830
1424 24596
1710 24335

Proposed Rules:
274 23927
276 23927
278 23927
279 23927
280 23927
360 23425
1530 23230

9 CFR

Proposed Rules:
2 24052
130 25308

10 CFR

40 25281
70 23574
71 23574
72 23183
73 23574
150 25281

Proposed Rules:
20 23618
490 23620

11 CFR

Proposed Rules:
104 26237
107 26237
110 26237
9003 26237
9004 26237
9008 26237
9032 26237
9033 26237
9034 26237
9035 26237
9036 26237
9038 26237

12 CFR

21 25090
208 25090
211 25090
326 25090
563 25090
740 23381
748 25090

Proposed Rules:
613 .....23425, 23426

14 CFR

1 25486
11 25486
25 .....24336, 24338
39 .....23183, 23186, 23190, 23384, 23387, 23575, 23886, 24614, 24861, 25488, 25811, 26201
71 .....23577, 23579, 23580, 23581, 23682, 24340, 24341, 24342, 24864, 24866, 24868, 24869, 24870, 24871, 24872, 24874, 25489, 25491, 25492, 25493, 25494, 25495, 25684, 26202
73 25495
77 23583
97 .....23888, 23889
382 24874

Proposed Rules:
3 23808

25 26237
39 ....23231, 23235, 23427, 23620, 24383, 25543, 26239, 26242, 26244
71 ....23622, 23624, 23625, 23626
119 24810
121 24810
135 24810
145 24810
255 ....24896, 25844
330 23627
399 ....24896, 25844

15 CFR

0 24878
270 24343
902 24615

16 CFR

305 23584
Proposed Rules:
309 24669

17 CFR

42 25149
230 25788
232 ....24345, 25788
239 25788
240 25788
241 25281
249 25788
250 25788
259 25788
260 25788
269 25788
270 25131
274 25788

18 CFR

375 25814
376 25814
Proposed Rules:
35 24679

19 CFR

178 24052

20 CFR

Proposed Rules:
404 ....23192, 24896
416 ....23192, 24896

21 CFR

Ch. 1 24879
10 25283
14 25283
20 25283
310 24347
314 25283
358 24347
520 26204
522 26205
720 25283
1300 23195
1310 23195
Proposed Rules:
1 ....23630, 25242, 25188
11 25188
16 25242
101 23930
1308 26247
1310 24689

22 CFR

42 24638
121 25088
228 23891

23 CFR

140 24639
646 24639
661 24642
Proposed Rules:
630 ....23239, 24384

24 CFR

203 23370

25 CFR

Proposed Rules:
170 23631

26 CFR

1 ....23586, 24349, 24351, 24644, 24880
301 24644
602 24644
Proposed Rules:
1 ....23632, 23931, 24404, 24405, 24406, 24898, 24903, 25310, 25845
54 24406
602 24406

27 CFR

Proposed Rules:
4 24903
5 24903
7 24903
9 25851
13 24903

28 CFR

Proposed Rules:
513 25545

29 CFR

Proposed Rules:
1480 23634
1910 23528
4022 26206
4044 26206

30 CFR

36 23892
917 24644
948 24355
950 24647

31 CFR

103 ....25090, 25149, 25113, 25163
315 24794
351 24794
353 24794
359 24794
360 24794
363 24794
Proposed Rules:
103 ....23640, 23646, 23653, 25163

32 CFR

311 24880
505 25816
806B 24881
Proposed Rules:
701 24904

33 CFR

100 ....25817, 25818
110 25496
117 ....23390, 23590, 24882, 24883, 25818, 26208
165 ....23390, 23393, 23399, 23591, 23594, 23595, 23893, 23894, 23896, 24359, 24361, 24883, 25288, 25498, 25500, 25818, 26208
Proposed Rules:
62 25855
66 25855
67 25855
72 25855
165 ....23935, 24406, 24408, 26247
401 25546

34 CFR

674 25821
682 25821
685 25821

36 CFR

Proposed Rules:
251 ....25748, 25751
1280 23430

37 CFR

Proposed Rules:
262 23241

38 CFR

2 25503
4 25822
Proposed Rules:
39 23249

39 CFR

Proposed Rules:
111 23937

40 CFR

51 25684
52 ....23206, 23207, 23404, 23597, 23604, 24363, 24365, 24368, 24885, 25414, 25418, 25442, 25504, 26210, 26212
62 ....23209, 25291
63 ....23898, 24562, 24653
71 25507
80 24300
81 ....24368, 25418, 25442, 26212
89 25823
180 ....24370, 25824, 25831
271 ....23407, 23607
300 23211
312 24888
438 25686
Proposed Rules:
Ch. 1 ....24410, 25312
52 ....23270, 23430, 23661, 23662, 24416, 24417, 25547, 26248
60 24692
62 ....23272, 25313
63 26249
71 25548
80 24311
81 26248
146 ....23666, 23673
258 25550
300 23939

44 CFR

64 23408
67 23898
Proposed Rules:
67 23941

45 CFR

2 25838
32 24052
148 23410
301 25293
302 25293
303 25293
304 25293
307 25293
1309 23212

46 CFR

Proposed Rules:
540 23947

47 CFR

Ch. 1 25840
1 ....23417, 25841
2 25512
52 25843
73 ....23613, 23900, 23901, 25512, 25542, 26220
74 ....25512, 26220
80 25512
90 25512
97 25512
Proposed Rules:
1 23431
15 23677
64 25313
73 24417

48 CFR

511 24372
516 24372
532 24372
538 24372
546 24372
552 24372
1802 23423
1806 23423
1815 23423
1816 23423
1843 23423
1845 23424
Proposed Rules:
208 26265
219 26265
252 26265
245 25313

49 CFR

107 ....23832, 24653
171 ....23832, 24653
173 24653
176 23832
177 ....23832, 24653
180 24653
209 24891
383 23844
384 23844
571 ....23614, 24664
1570 23852
1572 23852
Proposed Rules:
193 23272
571 ....26269, 26384
572 24417
1137 ....23947, 25859

50 CFR

17 25934

216 24905
300 .....23224, 23901, 26230
600.....23901, 26230
622.....26230
648.....24914, 25305
660 .....23901, 23913, 23924
679 .....23925, 24615, 24667, 24668, 26230

Proposed Rules:
18.....24700
20.....24324
216.....24905
622.....23686
648 .....23275, 23948, 23949, 24914

REMINDERS

The items in this list were editorially compiled as an aid to Federal Register users. Inclusion or exclusion from this list has no legal significance.

RULES GOING INTO EFFECT MAY 15, 2003

COMMERCE DEPARTMENT

National Oceanic and Atmospheric Administration

Fishery conservation and management:

Alaska; fisheries of Exclusive Economic Zone—

Pacific halibut; subsistence fishing; published 4-15-03

Alaska; fisheries of Exclusive Economic Zone—

Pacific halibut; subsistence fishing; correction; published 5-15-03

HEALTH AND HUMAN SERVICES DEPARTMENT

Food and Drug Administration

Animal drugs, feeds, and related products:

Carprofen; published 5-15-03

Fenbendazole suspension; published 5-15-03

Penicillin G potassium in drinking water; published 5-15-03

Xylazine injection; published 5-15-03

NATIONAL CREDIT UNION ADMINISTRATION

Credit unions:

Organization and operations—

Chartering and field of membership policies; update; published 4-15-03

TRANSPORTATION DEPARTMENT

Federal Aviation Administration

Air traffic operating and flight rules, etc.:

Area navigation and miscellaneous amendments; published 4-8-03

Airworthiness directives:

McDonnell Douglas; published 4-10-03

Class D airspace; published 10-23-02

Class D and Class E airspace; published 2-10-03

Class E airspace; published 2-19-03

Class E5 airspace; published 2-10-03

IFR altitudes; published 4-11-03

Prohibited areas; published 2-19-03

Restricted areas; published 1-23-03

TRANSPORTATION DEPARTMENT

National Highway Traffic Safety Administration

Motor vehicle safety standards:

Defect and noncompliance—

Reporting information and documentation; published 4-15-03

COMMENTS DUE NEXT WEEK

AGRICULTURE DEPARTMENT

Agricultural Marketing Service

Hass avocado promotion, research, and information order; comments due by 5-19-03; published 3-18-03 [FR 03-06510]

AGRICULTURE DEPARTMENT

Animal and Plant Health Inspection Service

Plant related quarantine; domestic:

Fire ant, imported; methoprene, authorized treatment; comments due by 5-20-03; published 3-21-03 [FR 03-06799]

User fees:

Export certificates for ruminants; comments due by 5-20-03; published 3-21-03 [FR 03-06797]

AGRICULTURE DEPARTMENT

Foreign Agricultural Service

Farmers; trade adjustment assistance; comments due by 5-23-03; published 4-23-03 [FR 03-10050]

COMMERCE DEPARTMENT

National Oceanic and Atmospheric Administration

Fishery conservation and management:

West Coast States and Western Pacific fisheries—

Pacfic Coast groundfish; correction; comments due by 5-22-03; published 5-6-03 [FR 03-11084]

West Coast salmon; comments due by 5-21-03; published 5-6-03 [FR 03-11083]

EDUCATION DEPARTMENT

Elementary and secondary education:

Disadvantaged children; academic achievement improvement; comments due by 5-19-03; published 3-20-03 [FR 03-06653]

ENVIRONMENTAL PROTECTION AGENCY

Air pollution control:

Interstate ozone transport reduction—

Nitrogen oxides budget trading program; Section 126 petitions; findings of significant contribution and rulemaking; withdrawal provision; comments due by 5-24-03; published 4-4-03 [FR 03-08152]

ENVIRONMENTAL PROTECTION AGENCY

Air quality implementation plans; approval and promulgation; various States; air quality planning purposes; designation of areas:

Wisconsin; comments due by 5-19-03; published 4-17-03 [FR 03-09347]

ENVIRONMENTAL PROTECTION AGENCY

Air quality implementation plans; approval and promulgation; various States; air quality planning purposes; designation of areas:

Wisconsin; comments due by 5-19-03; published 4-17-03 [FR 03-09348]

ENVIRONMENTAL PROTECTION AGENCY

Air quality implementation plans; approval and promulgation; various States:

Louisiana; comments due by 5-21-03; published 4-21-03 [FR 03-09619]

ENVIRONMENTAL PROTECTION AGENCY

Air quality implementation plans; approval and promulgation; various States:

Louisiana; comments due by 5-21-03; published 4-21-03 [FR 03-09620]

Superfund program:

Toxic chemical release reporting; community right-to-know—

North American Industry Classification System; comments due by 5-20-03; published 3-21-03 [FR 03-06582]

FEDERAL ELECTION COMMISSION

Bipartisan Campaign Reform Act; implementation:

Presidential candidates and nominating conventions; public financing; comments due by 5-23-03; published 5-15-03 [FR 03-11978]

GOVERNMENT ETHICS OFFICE

Government ethics:

Post-employment conflict of interest restrictions; comments due by 5-19-03; published 2-18-03 [FR 03-03043]

Correction; comments due by 5-19-03; published 3-31-03 [FR 03-07539]

HEALTH AND HUMAN SERVICES DEPARTMENT

Food and Drug Administration

Human drugs:

Ophthalmic products for emergency first aid use (OTC); final monograph; amendment; comments due by 5-20-03; published 2-19-03 [FR 03-03927]

HOMELAND SECURITY DEPARTMENT

Coast Guard

Drawbridge operations:

Florida; comments due by 5-19-03; published 3-19-03 [FR 03-06637]

New Jersey; comments due by 5-19-03; published 3-20-03 [FR 03-06638]

Ports and waterways safety:

Long Island Sound Marine Inspection and Captain of Port Zone, CT; regulated navigation area and safety and security zones; comments due by 5-19-03; published 3-20-03 [FR 03-06642]

HOMELAND SECURITY DEPARTMENT

Customs Service

Articles conditionally free, subject to reduced rates, etc.:

African Growth and Opportunity Act; sub-Saharan Africa trade benefits; textile and apparel provisions; comments due by 5-20-03; published 3-21-03 [FR 03-06760]

Caribbean Basin Economic Recovery Act; textile and

apparel provisions; comments due by 5-20-03; published 3-21-03 [FR 03-06755]

HOMELAND SECURITY DEPARTMENT

Customs Service

Merchandise, special classes, and financial and accounting procedures:

Patent Survey Program; discontinuation; comments due by 5-19-03; published 3-20-03 [FR 03-06756]

INTERIOR DEPARTMENT

Surface coal mining hearings and appeals; special rules; comments due by 5-19-03; published 3-20-03 [FR 03-06555]

LABOR DEPARTMENT

Mine Safety and Health Administration

Coal mine safety and health:

Underground mines—

Sanitary toilets; standards; comments due by 5-21-03; published 4-21-03 [FR 03-09656]

LABOR DEPARTMENT

Mine Safety and Health Administration

Coal mine safety and health:

Underground mines—

Sanitary toilets; standards; comments due by 5-21-03; published 4-21-03 [FR 03-09655]

LABOR DEPARTMENT

Mine Safety and Health Administration

Metal and nonmetal mine safety and health:

Seat belts for off-road work machines and wheeled agricultural tractors; comments due by 5-21-03; published 4-21-03 [FR 03-09658]

LABOR DEPARTMENT

Mine Safety and Health Administration

Metal and nonmetal mine safety and health:

Seat belts for off-road work machines and wheeled agricultural tractors; comments due by 5-21-03; published 4-21-03 [FR 03-09657]

LIBRARY OF CONGRESS

Copyright Office, Library of Congress

Copyright Arbitration Royalty Panel rules and procedures:

Digital performance of sound recordings; reasonable rates and terms determinations; comments due by 5-21-03; published 4-21-03 [FR 03-09783]

NATIONAL AERONAUTICS AND SPACE ADMINISTRATION

Space flight:

Astronaut candidates; recruitment and selection; comments due by 5-23-03; published 4-23-03 [FR 03-10002]

NUCLEAR REGULATORY COMMISSION

Byproduct material; medical use:

Clarifications and amendments; comments due by 5-21-03; published 4-21-03 [FR 03-09601]

NUCLEAR REGULATORY COMMISSION

Byproduct material; medical use:

Clarifications and amendments; comments due by 5-21-03; published 4-21-03 [FR 03-09602]

PERSONNEL MANAGEMENT OFFICE

Health and counseling programs, Federal employees:

Child care costs for lower income employees; agency use of appropriated funds; comments due by 5-23-03; published 3-24-03 [FR 03-06887]

TRANSPORTATION DEPARTMENT

Procedural regulations:

Air carriers; compensation procedures; adjustment; comments due by 5-19-03; published 5-5-03 [FR 03-11185]

TRANSPORTATION DEPARTMENT

Federal Aviation Administration

Airworthiness directives:

Bell; comments due by 5-19-03; published 3-18-03 [FR 03-06136]

TRANSPORTATION DEPARTMENT

Federal Aviation Administration

Airworthiness directives:

Bombardier; comments due by 5-23-03; published 4-23-03 [FR 03-09690]

TRANSPORTATION DEPARTMENT

Federal Aviation Administration

Airworthiness directives:

General Electric Co.; comments due by 5-19-03; published 3-18-03 [FR 03-06044]

TRANSPORTATION DEPARTMENT

Federal Aviation Administration

Airworthiness directives:

Short Brothers and Harland Ltd.; comments due by 5-19-03; published 4-10-03 [FR 03-08750]

Airworthiness standards:

Special conditions—

Embraer Model ERJ-170 series airplanes; comments due by 5-23-03; published 4-23-03 [FR 03-10045]

Class E airspace; comments due by 5-19-03; published 4-3-03 [FR 03-08143]

TRANSPORTATION DEPARTMENT

Federal Aviation Administration

Class E airspace; comments due by 5-19-03; published 4-17-03 [FR 03-09506]

TRANSPORTATION DEPARTMENT

National Highway Traffic Safety Administration

Insurer reporting requirements:

Insurers required to file reports; list; comments due by 5-20-03; published 3-21-03 [FR 03-05629]

TREASURY DEPARTMENT

Foreign Assets Control Office

Cuban assets control regulations:

Family and educational travel transactions, remittances, support for Cuban people and humanitarian projects; technical amendments; comments due by 5-23-03; published 3-24-03 [FR 03-06808]

TREASURY DEPARTMENT

Internal Revenue Service

Excise taxes:

Structured settlement factoring transactions; cross-reference; comments due by 5-20-03; published 2-19-03 [FR 03-03865]

TREASURY DEPARTMENT

Currency and foreign transactions; financial reporting and recordkeeping requirements:

USA PATRIOT Act; implementation—

Nauru; special measures imposition due to designation as primary money laundering concern; comments due by 5-19-03; published 4-17-03 [FR 03-09410]

Terrorism Risk Insurance Program

State residual market insurance entities and State workers' compensation funds; comments due by 5-19-03; published 4-18-03 [FR 03-09613]

TREASURY DEPARTMENT

Terrorism Risk Insurance Program

Statutory conditions for Federal payment; comments due by 5-19-03; published 4-18-03 [FR 03-09611]

TREASURY DEPARTMENT

Terrorism Risk Insurance Program

Statutory conditions for Federal payment; cross-reference; comments due by 5-19-03; published 4-18-03 [FR 03-09612]

VETERANS AFFAIRS DEPARTMENT

Grants and cooperative agreements; availability, etc.:

Homeless Providers Grant and Per Diem Program; comments due by 5-19-03; published 3-19-03 [FR 03-06329]

LIST OF PUBLIC LAWS

This is a continuing list of public bills from the current session of Congress which have become Federal laws. It may be used in conjunction with ''P L U S'' (Public Laws Update Service) on 202–741–6043. This list is also available online at *http://www.nara.gov/fedreg/plawcurr.html*.

The text of laws is not published in the **Federal Register** but may be ordered in ''slip law'' (individual pamphlet) form from the Superintendent of Documents, U.S. Government Printing Office, Washington, DC 20402 (phone, 202–512–1808). The text will also be made available on the Internet from GPO Access at *http://www.access.gpo.gov/nara/nara005.html*. Some laws may not yet be available.

H.R. 1770/P.L. 108–20

Smallpox Emergency Personnel Protection Act of 2003 (Apr. 30, 2003; 117 Stat. 638)

S. 151/P.L. 108–21

Prosecutorial Remedies and Other Tools to end the Exploitation of Children Today Act of 2003 (Apr. 30, 2003; 117 Stat. 650)

Last List April 29, 2003

Public Laws Electronic Notification Service (PENS)

PENS is a free electronic mail notification service of newly enacted public laws. To subscribe, go to *http://listserv.gsa.gov/archives/publaws-l.html*

Note: This service is strictly for E-mail notification of new laws. The text of laws is not available through this service. **PENS** cannot respond to specific inquiries sent to this address.